THESE DRAWINGS ARE THE PROPERTY OF QUALTEK ELECTRONICS AND NOT TO BE REPRODUCED FOR OR COMMUNICATED TO A THIRD PARTY WITHOUT THE EXPRESS WRITTEN PERMISSION OF AN OFFICER OF QUALTEK ELECTRONICS.

REVISION			
REV.	DESCRIPTION	DATE	APPROVED

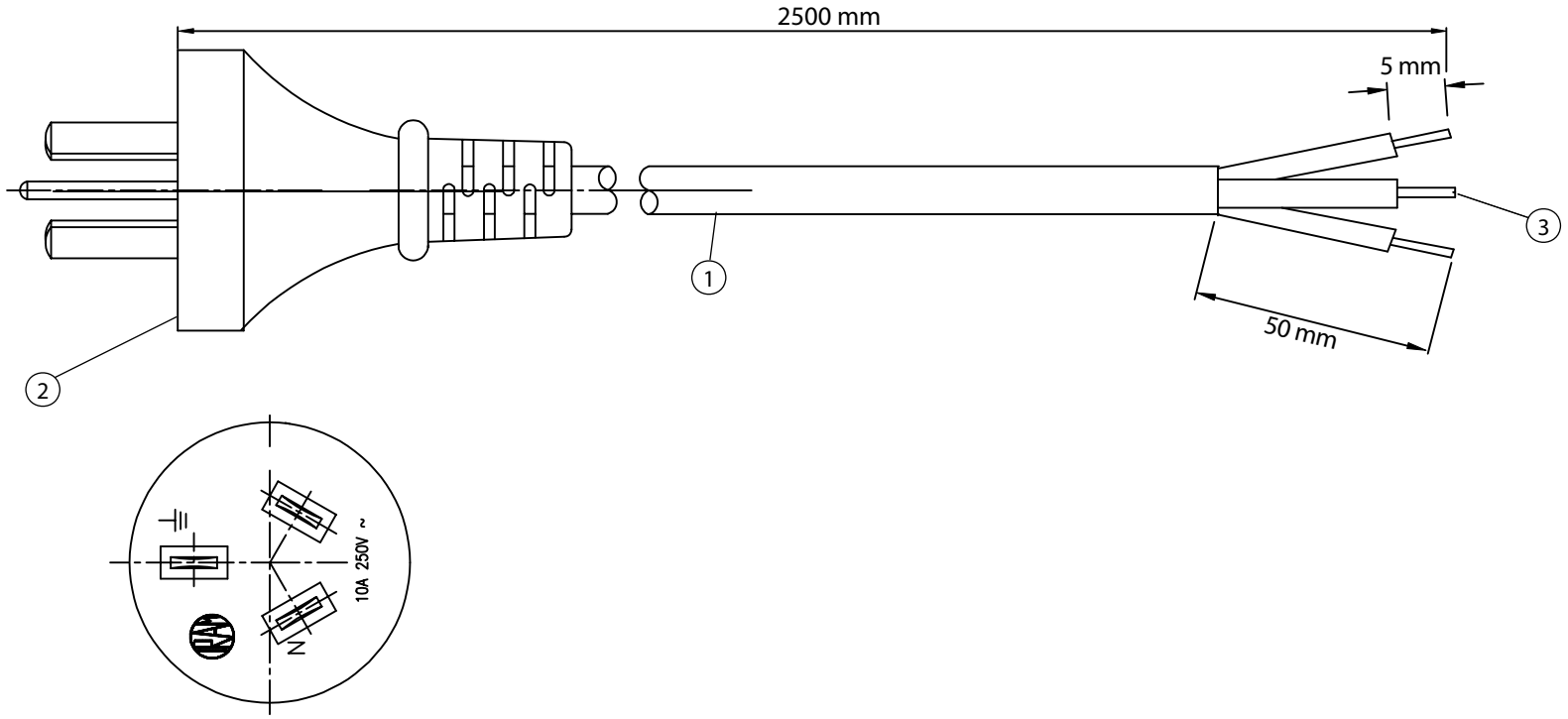

CONTROLLED

NOTES:

1. CORDAGE: H05VV-F, 3 X 1.0mm, UNSHIELDED, CEE COLOR CODE, TEMP. RATING 70°C, RATING: 250V 10A, JACKET COLOR: BLACK
2. PLUG: IRAM2073
3. OTHER END: ROJ 50mm, STRIP 5mm
4. APPROVALS: IRAM
5. ROHS COMPLIANT

Dim range (mm)	Tolerance +/- (mm)
0-1	0.15
1-6	0.20
6-18	0.30
18-50	0.50
50-120	0.70
120-250	0.90
250-500	1.20

Qualtek Electronics Corp.
PPC DIVISION

Part Number: 390001-01 RoHS Compliant

Description: POWER CORD

UNIT: mm

Drawn / Date	Checked / Date	Approved / Date
R.Nuti 09-04-07	09-04-07	JJH / 09-04-07