PART NUMBER DATA							
CIRCUITS	PART NUMBER	ENGINEERING NUMBER	COLOR	A IN	mm	B IN	mm
2	391002002	M800-02-02-5-M1	WHITE	.67	17.0	.394	10.00
3	391002003	M800-02-03-5-M1	WHITE	1.06	27.0	.787	20.00
4	391002004	M800-02-04-5-M1	WHITE	1.46	37.0	1.181	30.00
5	391002005	M800-02-05-5-M1	WHITE	1.85	47.0	1.575	40.00
6	391002006	M800-02-06-5-M1	WHITE	2.24	57.0	1.969	50.00
7	391002007	M800-02-07-5-M1	WHITE	2.64	67.0	2.362	60.00
8	391002008	M800-02-08-5-M1	WHITE	3.03	77.0	2.756	70.00
9	391002009	M800-02-09-5-M1	WHITE	3.43	87.0	3.150	80.00
10	391002010	M800-02-10-5-M1	WHITE	3.82	97.0	3.543	90.00
11	391002011	M800-02-11-5-M1	WHITE	4.21	107.0	3.937	100.00
12	391002012	M800-02-12-5-M1	WHITE	4.61	117.0	4.331	110.00

REF. LAST 2 DIGITS OF PART NUMBER EQUAL CIRCUIT COUNT

NOTE: IF THIS PRODUCT IS STORED IN AN ENVIRONMENT WITH A RELATIVE HUMIDITY OF LESS THAN 50%, MOISTURE MUST BE ADDED. REFER TO TECHNICAL ADVISORY AS 45499-001 FOR INSTRUCTIONS. (C)

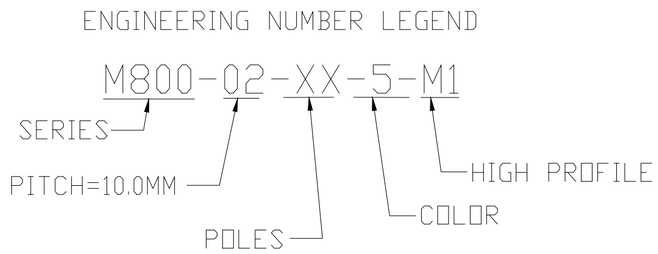

CONTACT FACTORY FOR OPTIONAL COLORS

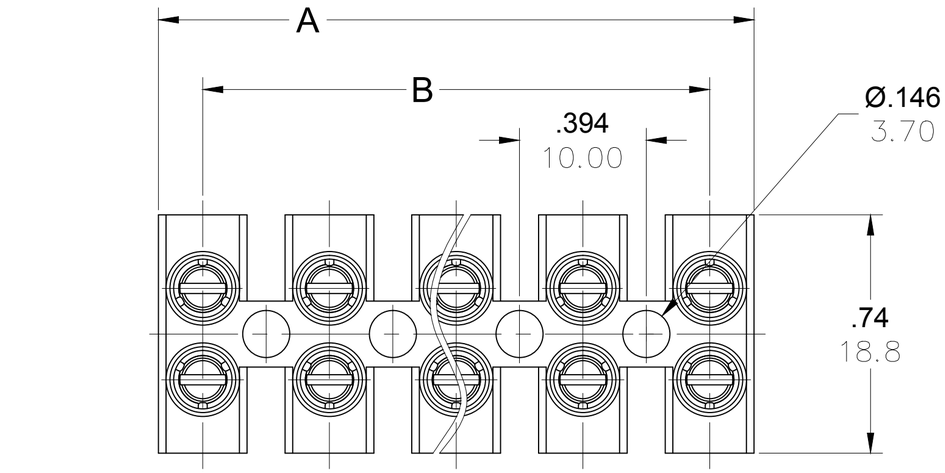

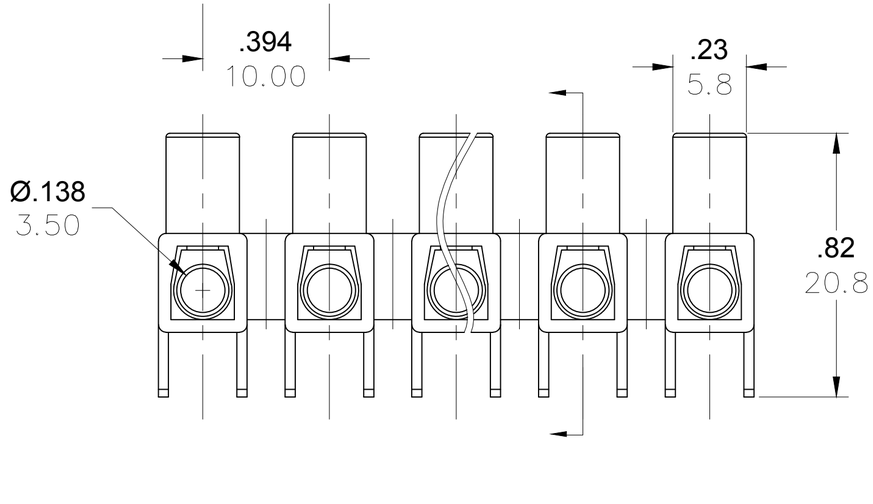

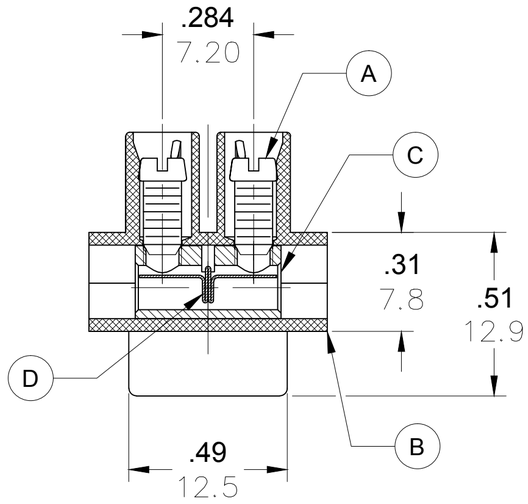

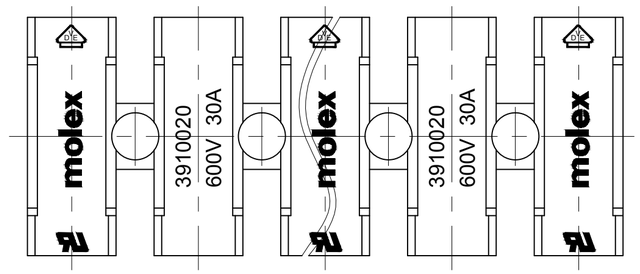

SPECIFICATIONS:

1. Material:
   (A) Screw: Steel, Zinc plated
   (B) Body: PA66 UL94 V-0
   (C) Cage: Brass, Nickel plated
   (D) Terminal: Stainless Steel
2. Rating: 600V, 30amps
3. Wire range: 18-10 AWG
4. Max torque: 7.0 in lbs.
5. Dielectric voltage withstand: DC 3000V for 1 minute.
6. Insulation resistance: DC 1000V, 100GΩ
7. Rated Impulse Voltage: 4000V, Plus and Minus 5 times each
8. Strip Length: .24 in. (6.0mm)
9. Operating Temperature: -40° C to +105° C
10. Contact Resistance: < 3 mΩ
11. All dims. shown are for reference only

TOLERANCES			
MM	TOL	INCH	TOL
0-6	±0.25	0-.24	±.010
>6-30	±0.40	.24-1.18	±.016
>30-120	±0.50	1.18-4.76	±.020
>120	±0.80	>4.76	±.031

REVISED DOC TOL 4/5/17 ---
EC NO: IPG2017-0881
DRWN: ABENJAMI
CH'KD: ---
APPR: BRUPERT 2014/07/21
DESCRIPTION
REV
C1

QUALITY SYMBOL
▼=0
C=0

GENERAL TOLERANCES (UNLESS SPECIFIED)

	mm	INCH
4 PLACES	±---	±---
3 PLACES	±---	±---
2 PLACES	±---	±---
1 PLACE	±---	±---
ANGULAR ±---°		

DRAFT WHERE APPLICABLE MUST REMAIN WITHIN DIMENSIONS

DIMENSION STYLE: IN/MM
SCALE: ---
DESIGN UNITS: METRIC
THIRD ANGLE PROJECTION

DRAWN BY: RSTONE DATE: 2014/07/08
CHECKED BY: G FARNSW DATE: ----
APPROVED BY: JFMURPHY DATE: 2014/07/21

TITLE: TERMINAL STRIP 10MM HIGH PROFILE 600V
----

molex MOLEX INCORPORATED

MATERIAL NO.: SEE CHART
DOCUMENT NO.: SD-39100-013
SHEET NO.: 1 0F 1

SIZE C

THIS DRAWING CONTAINS INFORMATION THAT IS PROPRIETARY TO MOLEX INCORPORATED AND SHOULD NOT BE USED WITHOUT WRITTEN PERMISSION