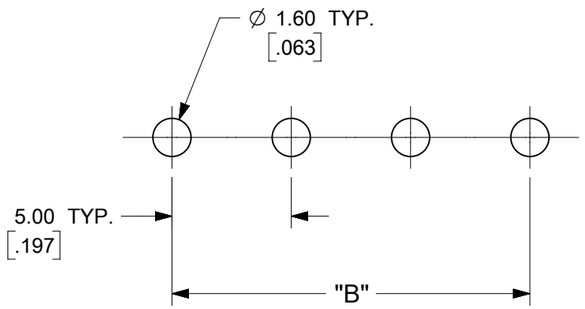

PCB LAYOUT

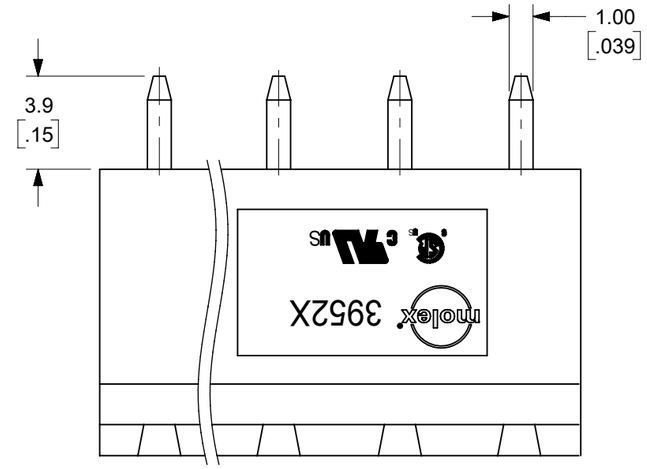

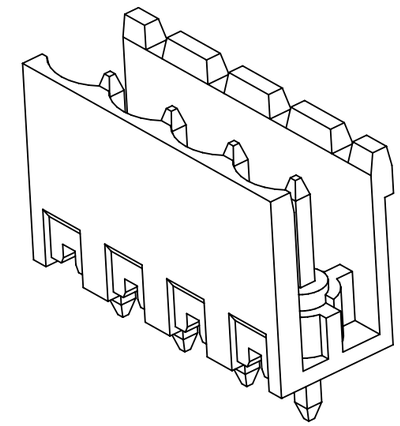

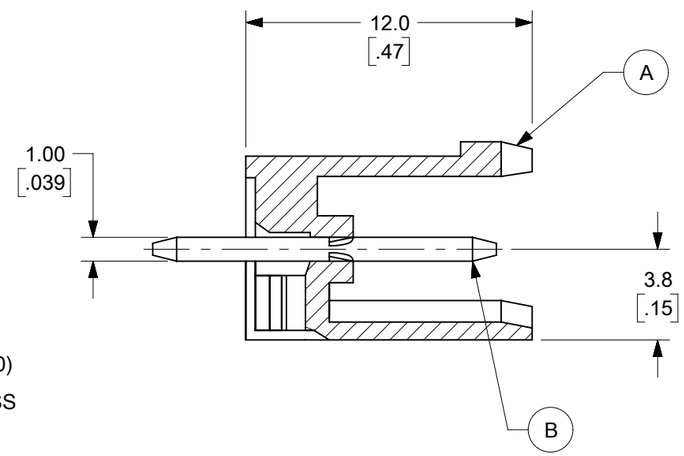

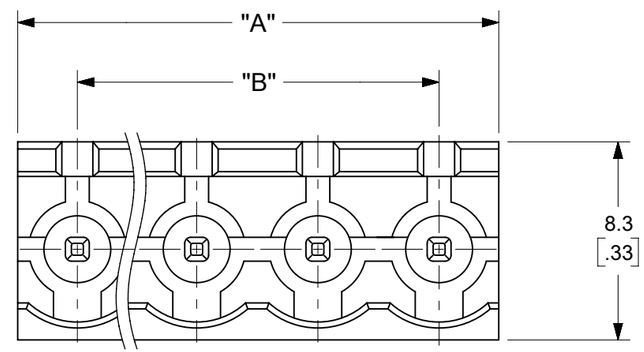

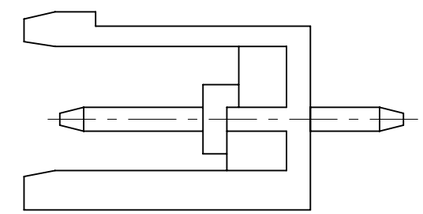

A3

SPECIFICATIONS:

1. MATERIAL:
   (A). BODY: PA66 (UL94-V0)
   (B). PIN MATERIAL: BRASS
   PIN FINISH:
   TIN - 3 µm (118 µin) MIN MATTE TIN
   OVER 2 µm (79 µin) MIN NICKEL
   GOLD - 0.76 µm (30 µin) MIN GOLD IN
   CONTACT AREA, 3 µm (118 µIN) MIN
   MATTE TIN IN SOLDER AREA.
   2 µm (79 µin) MIN NICKEL UNDERPLATE
2. ELECTRICAL RATING: 300V, 18A (PER UL)
3. OPERATING TEMPERATURE: -40°C to +115°C.
4. INSULATION RESISTANCE: DC 500V, 500MΩ.
5. DIELECTRIC WITHSTAND: AC 2500V FOR 1 MINUTE.
6. BREAKDOWN VOLTAGE : 4000V.

TOLERANCES			
MM	TOL	INCH	TOL
0-6	±0.25	0-.24	±.010
>6-30	±0.40	.24-1.18	±.016
>30-120	±0.50	1.18-4.76	±.020
>120	±0.80	>4.76	±.031

THIS DRAWING CONTAINS INFORMATION THAT IS PROPRIETARY TO MOLEX ELECTRONIC TECHNOLOGIES, LLC AND SHOULD NOT BE USED WITHOUT WRITTEN PERMISSION

FUNCTIONAL SYMBOLS: E/A = 0, E/C = 0, E/P = 0

DIVISIONAL SYMBOLS

DIMENSION UNITS: MM/INCH
SCALE: 4:1

GENERAL TOLERANCES (UNLESS SPECIFIED)

	MM	INCH
4 PLACES	± ---	± ---
3 PLACES	± ---	± SEE CHART
2 PLACES	± SEE CHART	± SEE CHART
1 PLACE	± SEE CHART	± ---
0 PLACES	± ---	± ---
ANGULAR TOL	± ---	

DRAFT WHERE APPLICABLE MUST REMAIN WITHIN DIMENSIONS

CURRENT REV DESC: MODIFIED SPECIFICATIONS

EC NO: 735568
DRWN: ABENJAMINLW 2023/01/05
CHK'D: DACHAMMER 2023/01/17
APPR: JFMURPHY 2023/01/27

INITIAL REVISION:
DRWN: LROTHAUS 2006/01/09
APPR: JPAWLICK 2006/01/10

THIRD ANGLE PROJECTION | DRAWING: B-SIZE | SERIES: 39521

molex

5.0MM, EURO HEADER, VERTICAL, OPEN END

PRODUCT CUSTOMER DRAWING

DOCUMENT NUMBER	DOC TYPE	DOC PART	REVISION
SD-39521-003	PSD	001	A3

MATERIAL NUMBER	CUSTOMER	SHEET NUMBER
SEE SHEET-2	GENERAL MARKET	1 OF 2

DOCUMENT STATUS	P1	RELEASE DATE	2023/01/27 16:26:21

FORMAT: Eng-lega-master-tb-prod-B
REVISION: E1
DATE: 2021/05/01

DESCRIPTION	CIRCUIT SIZE	MATERIAL NUMBERS												DIMENSIONAL INFORMATION			
		BLACK						GREEN									
		100% TIN			30 u" GOLD			100% TIN			30 u" GOLD						
		PRINTING OPTIONS			PRINTING OPTIONS			PRINTING OPTIONS			PRINTING OPTIONS			DIM. "A"		DIM. "B"	
		None	10AV	11AV	None	10AV	11AV	None	10AV	11AV	None	10AV	11AV	mm	inch	mm	inch
5.0 MM, EURO HEADER, VERTICAL, OPEN END	2	395210002	395210302	395210402	395210502	395210802	395210902	395215002	395215302	395215402	395215502	395215802	395215902	10.00	.394	5.00	.197
5.0 MM, EURO HEADER, VERTICAL, OPEN END	3	395210003	395210303	395210403	395210503	395210803	395210903	395215003	395215303	395215403	395215503	395215803	395215903	15.00	.591	10.00	.394
5.0 MM, EURO HEADER, VERTICAL, OPEN END	4	395210004	395210304	395210404	395210504	395210804	395210904	395215004	395215304	395215404	395215504	395215804	395215904	20.00	.787	15.00	.591
5.0 MM, EURO HEADER, VERTICAL, OPEN END	5	395210005	395210305	395210405	395210505	395210805	395210905	395215005	395215305	395215405	395215505	395215805	395215905	25.00	.984	20.00	.787
5.0 MM, EURO HEADER, VERTICAL, OPEN END	6	395210006	395210306	395210406	395210506	395210806	395210906	395215006	395215306	395215406	395215506	395215806	395215906	30.00	1.181	25.00	.984
5.0 MM, EURO HEADER, VERTICAL, OPEN END	7	395210007	395210307	395210407	395210507	395210807	395210907	395215007	395215307	395215407	395215507	395215807	395215907	35.00	1.378	30.00	1.181
5.0 MM, EURO HEADER, VERTICAL, OPEN END	8	395210008	395210308	395210408	395210508	395210808	395210908	395215008	395215308	395215408	395215508	395215808	395215908	40.00	1.575	35.00	1.378
5.0 MM, EURO HEADER, VERTICAL, OPEN END	9	395210009	395210309	395210409	395210509	395210809	395210909	395215009	395215309	395215409	395215509	395215809	395215909	45.00	1.772	40.00	1.575
5.0 MM, EURO HEADER, VERTICAL, OPEN END	10	395210010	395210310	395210410	395210510	395210810	395210910	395215010	395215310	395215410	395215510	395215810	395215910	50.00	1.969	45.00	1.772
5.0 MM, EURO HEADER, VERTICAL, OPEN END	11	395210011	395210311	395210411	395210511	395210811	395210911	395215011	395215311	395215411	395215511	395215811	395215911	55.00	2.165	50.00	1.969
5.0 MM, EURO HEADER, VERTICAL, OPEN END	12	395210012	395210312	395210412	395210512	395210812	395210912	395215012	395215312	395215412	395215512	395215812	395215912	60.00	2.362	55.00	2.165
5.0 MM, EURO HEADER, VERTICAL, OPEN END	13	395210013	395210313	395210413	395210513	395210813	395210913	395215013	395215313	395215413	395215513	395215813	395215913	65.00	2.559	60.00	2.362
5.0 MM, EURO HEADER, VERTICAL, OPEN END	14	395210014	395210314	395210414	395210514	395210814	395210914	395215014	395215314	395215414	395215514	395215814	395215914	70.00	2.756	65.00	2.559
5.0 MM, EURO HEADER, VERTICAL, OPEN END	15	395210015	395210315	395210415	395210515	395210815	395210915	395215015	395215315	395215415	395215515	395215815	395215915	75.00	2.953	70.00	2.756
5.0 MM, EURO HEADER, VERTICAL, OPEN END	16	395210016	395210316	395210416	395210516	395210816	395210916	395215016	395215316	395215416	395215516	395215816	395215916	80.00	3.150	75.00	2.953
5.0 MM, EURO HEADER, VERTICAL, OPEN END	17	395210017	395210317	395210417	395210517	395210817	395210917	395215017	395215317	395215417	395215517	395215817	395215917	85.00	3.346	80.00	3.150
5.0 MM, EURO HEADER, VERTICAL, OPEN END	18	395210018	395210318	395210418	395210518	395210818	395210918	395215018	395215318	395215418	395215518	395215818	395215918	90.00	3.543	85.00	3.346
5.0 MM, EURO HEADER, VERTICAL, OPEN END	19	395210019	395210319	395210419	395210519	395210819	395210919	395215019	395215319	395215419	395215519	395215819	395215919	95.00	3.740	90.00	3.543
5.0 MM, EURO HEADER, VERTICAL, OPEN END	20	395210020	395210320	395210420	395210520	395210820	395210920	395215020	395215320	395215420	395215520	395215820	395215920	100.00	3.937	95.00	3.740
5.0 MM, EURO HEADER, VERTICAL, OPEN END	21	395210021	395210321	395210421	395210521	395210821	395210921	395215021	395215321	395215421	395215521	395215821	395215921	105.00	4.134	100.00	3.937
5.0 MM, EURO HEADER, VERTICAL, OPEN END	22	395210022	395210322	395210422	395210522	395210822	395210922	395215022	395215322	395215422	395215522	395215822	395215922	110.00	4.331	105.00	4.134
5.0 MM, EURO HEADER, VERTICAL, OPEN END	23	395210023	395210323	395210423	395210523	395210823	395210923	395215023	395215323	395215423	395215523	395215823	395215923	115.00	4.528	110.00	4.331
5.0 MM, EURO HEADER, VERTICAL, OPEN END	24	395210024	395210324	395210424	395210524	395210824	395210924	395215024	395215324	395215424	395215524	395215824	395215924	120.00	4.724	115.00	4.528

TOLERANCES			
MM	TOL	INCH	TOL
0-6	±0.25	0-.24	±.010
>6-30	±0.40	.24-1.18	±.016
>30-120	±0.50	1.18-4.76	±.020
>120	±0.80	>4.76	±.031

FUNCTIONAL SYMBOLS
EA = 0
EC = 0
EP = 0
DIVISIONAL SYMBOLS

THIS DRAWING CONTAINS INFORMATION THAT IS PROPRIETARY TO MOLEX ELECTRONIC TECHNOLOGIES, LLC AND SHOULD NOT BE USED WITHOUT WRITTEN PERMISSION

DIMENSION UNITS: MM/INCH
SCALE: 2:1

GENERAL TOLERANCES (UNLESS SPECIFIED)

	MM	INCH
4 PLACES	± ---	± ---
3 PLACES	± ---	± SEE CHART
2 PLACES	± SEE CHART	± SEE CHART
1 PLACE	± SEE CHART	± ---
0 PLACES	± ---	± ---
ANGULAR TOL	± ---	

DRAFT WHERE APPLICABLE MUST REMAIN WITHIN DIMENSIONS

CURRENT REV DESC: MODIFIED SPECIFICATIONS

EC NO: 735568
DRWN: ABENJAMINLW 2023/01/05
CHK'D: DACHAMMER 2023/01/17
APPR: JFMURPHY 2023/01/27

INITIAL REVISION:
DRWN: LROTHAUS 2006/01/09
APPR: JPAWLICK 2006/01/10

THIRD ANGLE PROJECTION
DRAWING: B-SIZE
SERIES: 39521

molex

5.0MM, EURO HEADER, VERTICAL, OPEN END

PRODUCT CUSTOMER DRAWING

DOCUMENT NUMBER	DOC TYPE	DOC PART	REVISION
SD-39521-003	PSD	001	A3

MATERIAL NUMBER	CUSTOMER	SHEET NUMBER
SEE TABLE	GENERAL MARKET	2 OF 2

DOCUMENT STATUS	P1	RELEASE DATE	2023/01/27 16:26:21

FORMAT: Eng-lega-master-tb-prod-B
REVISION: E1
DATE: 2021/05/01