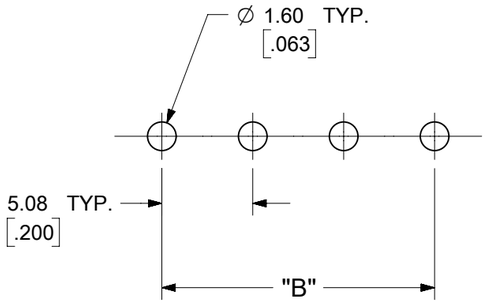

PCB LAYOUT

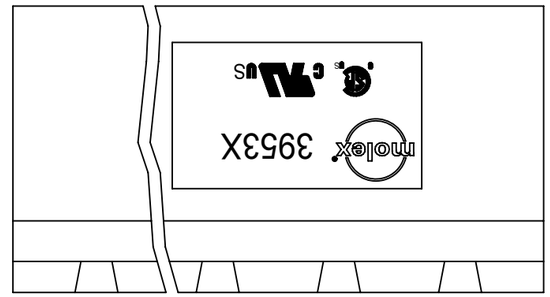

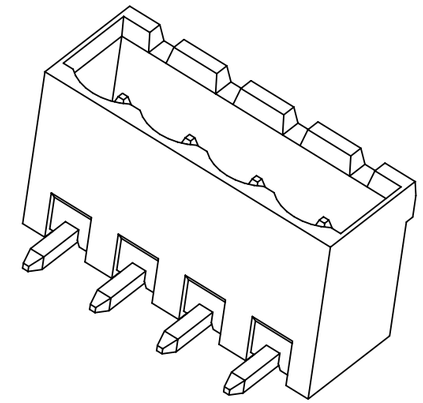

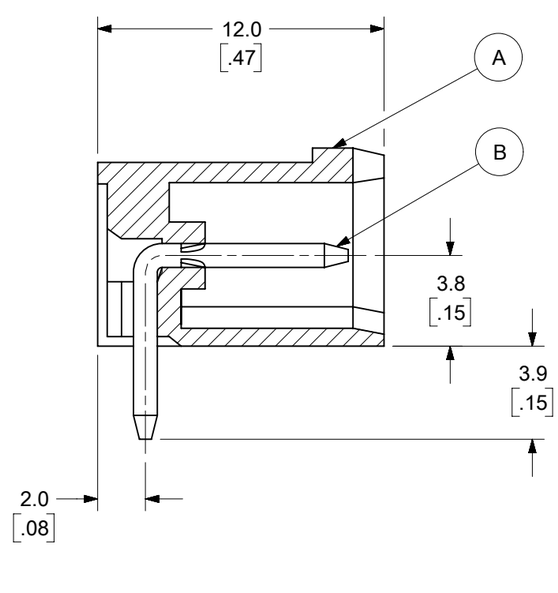

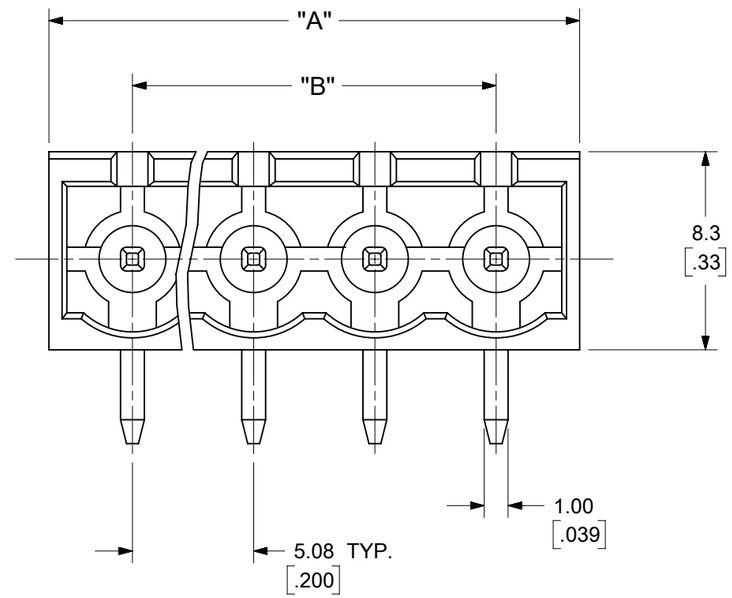

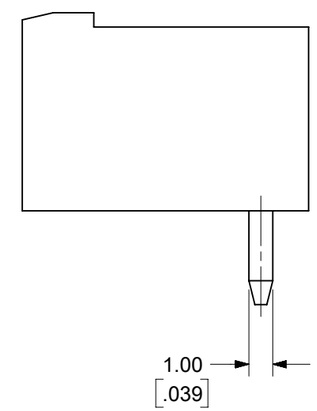

B3

SPECIFICATIONS:

1. MATERIAL:
   (A). BODY: PA66 (UL94-V0)
   (B). PIN MATERIAL: BRASS
   PIN FINISH:
   TIN - 3 µm (118 µin) MIN MATTE TIN
   OVER 2 µm (79 µin) MIN NICKEL
   GOLD - 0.76 µm (30 µin) MIN GOLD IN
   CONTACT AREA, 3 µm (118 µIN) MIN
   MATTE TIN IN SOLDER AREA.
   2 µm (79 µin) MIN NICKEL UNDERPLATE
2. ELECTRICAL RATING: 300V, 18A (PER UL)
3. OPERATING TEMPERATURE: -40°C to +115°C.
4. INSULATION RESISTANCE: DC 500V, 500MΩ.
5. DIELECTRIC WITHSTAND: AC 2500V FOR 1 MINUTE.
6. BREAKDOWN VOLTAGE : 4000V.

TOLERANCES			
MM	TOL	INCH	TOL
0-6	±0.25	0-.24	±.010
>6-30	±0.40	.24-1.18	±.016
>30-120	±0.50	1.18-4.76	±.020
>120	±0.80	>4.76	±.031

THIS DRAWING CONTAINS INFORMATION THAT IS PROPRIETARY TO MOLEX ELECTRONIC TECHNOLOGIES, LLC AND SHOULD NOT BE USED WITHOUT WRITTEN PERMISSION

FUNCTIONAL SYMBOLS: EA = 0, EC = 0, EP = 0

DIVISIONAL SYMBOLS

DIMENSION UNITS: MM/INCH
SCALE: 4:1

GENERAL TOLERANCES (UNLESS SPECIFIED)

	MM	INCH
4 PLACES	± ---	± ---
3 PLACES	± ---	± SEE CHART
2 PLACES	± SEE CHART	± SEE CHART
1 PLACE	± SEE CHART	± ---
0 PLACES	± ---	± ---
ANGULAR TOL	± ---	

DRAFT WHERE APPLICABLE MUST REMAIN WITHIN DIMENSIONS

CURRENT REV DESC: MODIFIED SPECIFICATIONS

EC NO: 735568
DRWN: ABENJAMINLW 2023/01/09
CHK'D: DACHAMMER 2023/01/17
APPR: JFMURPHY 2023/01/27

INITIAL REVISION:
DRWN: LROTHAUS 2006/01/09
APPR: JPAWLICK 2006/01/10

THIRD ANGLE PROJECTION | DRAWING: B-SIZE | SERIES: 39532

molex

5.08MM, EURO HEADER, RIGHT ANGLE

PRODUCT CUSTOMER DRAWING

DOCUMENT NUMBER	DOC TYPE	DOC PART	REVISION
SD-39532-002	PSD	001	B3

MATERIAL NUMBER	CUSTOMER	SHEET NUMBER
SEE SHEET-2	GENERAL MARKET	1 OF 2

DOCUMENT STATUS	P1	RELEASE DATE	2023/01/27 16:26:32

FORMAT: Eng-lega-master-tb-prod-B
REVISION: E1
DATE: 2021/05/01

DESCRIPTION	CIRCUIT SIZE	MATERIAL NUMBERS												DIMENSIONAL INFORMATION			
		BLACK						GREEN									
		100% TIN			30 u" GOLD			100% TIN			30 u" GOLD						
		PRINTING OPTIONS			PRINTING OPTIONS			PRINTING OPTIONS			PRINTING OPTIONS			DIM. "A"		DIM. "B"	
		None	10AV	11AV	None	10AV	11AV	None	10AV	11AV	None	10AV	11AV	mm	inch	mm	inch
5.08 MM, EURO HEADER, RIGHT ANGLE, OPEN END	2	395321002	395321102	395321202	395321502	395321602	395321702	395326002	395326102	395326202	395326502	395326602	395326702	12.16	0.479	5.08	0.200
5.08 MM, EURO HEADER, RIGHT ANGLE, OPEN END	3	395321003	395321103	395321203	395321503	395321603	395321703	395326003	395326103	395326203	395326503	395326603	395326703	17.24	0.679	10.16	0.400
5.08 MM, EURO HEADER, RIGHT ANGLE, OPEN END	4	395321004	395321104	395321204	395321504	395321604	395321704	395326004	395326104	395326204	395326504	395326604	395326704	22.32	0.879	15.24	0.600
5.08 MM, EURO HEADER, RIGHT ANGLE, OPEN END	5	395321005	395321105	395321205	395321505	395321605	395321705	395326005	395326105	395326205	395326505	395326605	395326705	27.40	1.079	20.32	0.800
5.08 MM, EURO HEADER, RIGHT ANGLE, OPEN END	6	395321006	395321106	395321206	395321506	395321606	395321706	395326006	395326106	395326206	395326506	395326606	395326706	32.48	1.279	25.40	1.000
5.08 MM, EURO HEADER, RIGHT ANGLE, OPEN END	7	395321007	395321107	395321207	395321507	395321607	395321707	395326007	395326107	395326207	395326507	395326607	395326707	37.56	1.479	30.48	1.200
5.08 MM, EURO HEADER, RIGHT ANGLE, OPEN END	8	395321008	395321108	395321208	395321508	395321608	395321708	395326008	395326108	395326208	395326508	395326608	395326708	42.64	1.679	35.56	1.400
5.08 MM, EURO HEADER, RIGHT ANGLE, OPEN END	9	395321009	395321109	395321209	395321509	395321609	395321709	395326009	395326109	395326209	395326509	395326609	395326709	47.72	1.879	40.64	1.600
5.08 MM, EURO HEADER, RIGHT ANGLE, OPEN END	10	395321010	395321110	395321210	395321510	395321610	395321710	395326010	395326110	395326210	395326510	395326610	395326710	52.80	2.079	45.72	1.800
5.08 MM, EURO HEADER, RIGHT ANGLE, OPEN END	11	395321011	395321111	395321211	395321511	395321611	395321711	395326011	395326111	395326211	395326511	395326611	395326711	57.88	2.279	50.80	2.000
5.08 MM, EURO HEADER, RIGHT ANGLE, OPEN END	12	395321012	395321112	395321212	395321512	395321612	395321712	395326012	395326112	395326212	395326512	395326612	395326712	62.96	2.479	55.88	2.200
5.08 MM, EURO HEADER, RIGHT ANGLE, OPEN END	13	395321013	395321113	395321213	395321513	395321613	395321713	395326013	395326113	395326213	395326513	395326613	395326713	68.04	2.679	60.96	2.400
5.08 MM, EURO HEADER, RIGHT ANGLE, OPEN END	14	395321014	395321114	395321214	395321514	395321614	395321714	395326014	395326114	395326214	395326514	395326614	395326714	73.12	2.879	66.04	2.600
5.08 MM, EURO HEADER, RIGHT ANGLE, OPEN END	15	395321015	395321115	395321215	395321515	395321615	395321715	395326015	395326115	395326215	395326515	395326615	395326715	78.20	3.079	71.12	2.800
5.08 MM, EURO HEADER, RIGHT ANGLE, OPEN END	16	395321016	395321116	395321216	395321516	395321616	395321716	395326016	395326116	395326216	395326516	395326616	395326716	83.28	3.279	76.20	3.000
5.08 MM, EURO HEADER, RIGHT ANGLE, OPEN END	17	395321017	395321117	395321217	395321517	395321617	395321717	395326017	395326117	395326217	395326517	395326617	395326717	88.36	3.479	81.28	3.200
5.08 MM, EURO HEADER, RIGHT ANGLE, OPEN END	18	395321018	395321118	395321218	395321518	395321618	395321718	395326018	395326118	395326218	395326518	395326618	395326718	93.44	3.679	86.36	3.400
5.08 MM, EURO HEADER, RIGHT ANGLE, OPEN END	19	395321019	395321119	395321219	395321519	395321619	395321719	395326019	395326119	395326219	395326519	395326619	395326719	98.52	3.879	91.44	3.600
5.08 MM, EURO HEADER, RIGHT ANGLE, OPEN END	20	395321020	395321120	395321220	395321520	395321620	395321720	395326020	395326120	395326220	395326520	395326620	395326720	103.60	4.079	96.52	3.800
5.08 MM, EURO HEADER, RIGHT ANGLE, OPEN END	21	395321021	395321121	395321221	395321521	395321621	395321721	395326021	395326121	395326221	395326521	395326621	395326721	108.68	4.279	101.60	4.000
5.08 MM, EURO HEADER, RIGHT ANGLE, OPEN END	22	395321022	395321122	395321222	395321522	395321622	395321722	395326022	395326122	395326222	395326522	395326622	395326722	113.76	4.479	106.68	4.200
5.08 MM, EURO HEADER, RIGHT ANGLE, OPEN END	23	395321023	395321123	395321223	395321523	395321623	395321723	395326023	395326123	395326223	395326523	395326623	395326723	118.84	4.679	111.76	4.400
5.08 MM, EURO HEADER, RIGHT ANGLE, OPEN END	24	395321024	395321124	395321224	395321524	395321624	395321724	395326024	395326124	395326224	395326524	395326624	395326724	123.92	4.879	116.84	4.600

TOLERANCES			
MM	TOL	INCH	TOL
0-6	±0.25	0-.24	±.010
>6-30	±0.40	.24-1.18	±.016
>30-120	±0.50	1.18-4.76	±.020
>120	±0.80	>4.76	±.031

FUNCTIONAL SYMBOLS: FA = 0; FC = 0; FP = 0

DIVISIONAL SYMBOLS

THIS DRAWING CONTAINS INFORMATION THAT IS PROPRIETARY TO MOLEX ELECTRONIC TECHNOLOGIES, LLC AND SHOULD NOT BE USED WITHOUT WRITTEN PERMISSION

DIMENSION UNITS: MM/INCH
SCALE: 4:1

GENERAL TOLERANCES (UNLESS SPECIFIED)

	MM	INCH
4 PLACES	± ---	± ---
3 PLACES	± ---	± SEE CHART
2 PLACES	± SEE CHART	± SEE CHART
1 PLACE	± SEE CHART	± ---
0 PLACES	± ---	± ---
ANGULAR TOL	± ---	

DRAFT WHERE APPLICABLE MUST REMAIN WITHIN DIMENSIONS

CURRENT REV DESC: MODIFIED SPECIFICATIONS

EC NO: 735568
DRWN: ABENJAMINLW 2023/01/09
CHK'D: DACHAMMER 2023/01/17
APPR: JFMURPHY 2023/01/27

INITIAL REVISION:
DRWN: LROTHAUS 2006/01/09
APPR: JPAWLICK 2006/01/10

THIRD ANGLE PROJECTION | DRAWING: B-SIZE | SERIES: 39532

molex

5.08MM, EURO HEADER, RIGHT ANGLE

PRODUCT CUSTOMER DRAWING

DOCUMENT NUMBER	DOC TYPE	DOC PART	REVISION
SD-39532-002	PSD	001	B3

MATERIAL NUMBER	CUSTOMER	SHEET NUMBER
SEE CHART	GENERAL MARKET	2 OF 2

DOCUMENT STATUS	P1	RELEASE DATE	2023/01/27 16:26:32

FORMAT: Eng-lega-master-lb-prod-B
REVISION: E1
DATE: 2021/05/01