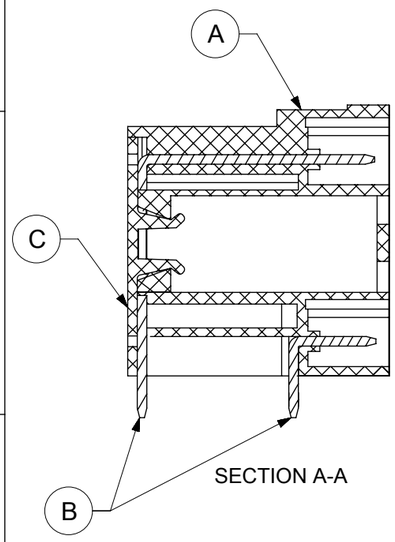

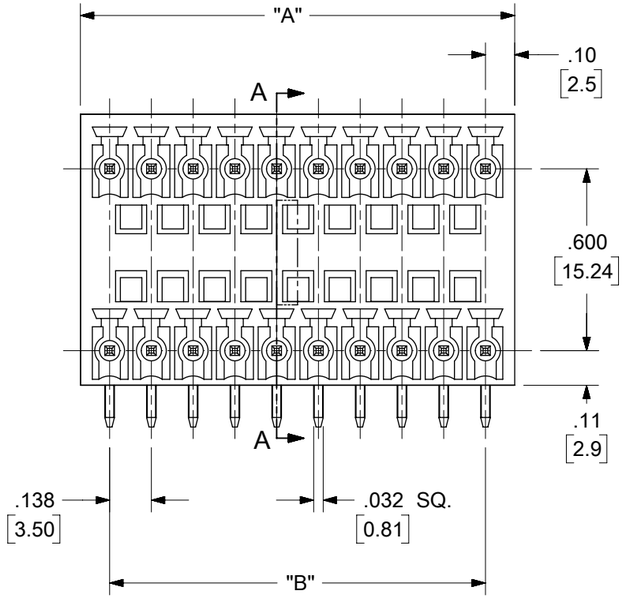

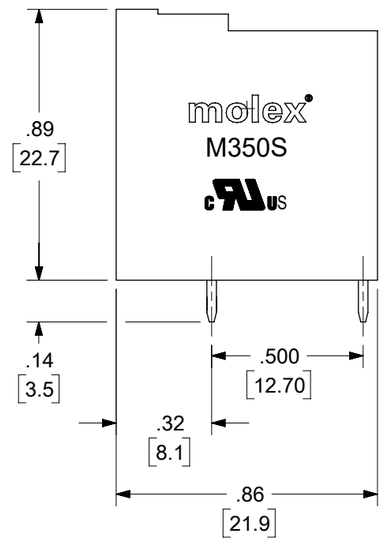

C

PART NUMBER DATA

CIRCUITS	PART NUMBER	ENGINEERING NUMBER	PART NUMBER	ENGINEERING NUMBER	DIM. "A"		DIM. "B"	
					IN	MM	IN	MM
2	397220002	M350S-18-02-3	397220102	M350S-18-02-1	.33	8.4	.138	3.50
3	397220003	M350S-18-03-3	397220103	M350S-18-03-1	.47	11.9	.276	7.00
4	397220004	M350S-18-04-3	397220104	M350S-18-04-1	.61	15.4	.413	10.50
5	397220005	M350S-18-05-3	397220105	M350S-18-05-1	.74	18.9	.551	14.00
6	397220006	M350S-18-06-3	397220106	M350S-18-06-1	.88	22.4	.689	17.50
7	397220007	M350S-18-07-3	397220107	M350S-18-07-1	1.02	25.9	.827	21.00
8	397220008	M350S-18-08-3	397220108	M350S-18-08-1	1.16	29.4	.965	24.50
9	397220009	M350S-18-09-3	397220109	M350S-18-09-1	1.30	32.9	1.102	28.00
10	397220010	M350S-18-10-3	397220110	M350S-18-10-1	1.43	36.4	1.240	31.50
11	397220011	M350S-18-11-3	397220111	M350S-18-11-1	1.57	39.9	1.378	35.00
12	397220012	M350S-18-12-3	397220112	M350S-18-12-1	1.71	43.4	1.516	38.50
13	397220013	M350S-18-13-3	397220113	M350S-18-13-1	1.85	46.9	1.654	42.00
14	397220014	M350S-18-14-3	397220114	M350S-18-14-1	1.98	50.4	1.791	45.50
15	397220015	M350S-18-15-3	397220115	M350S-18-15-1	2.12	53.9	1.929	49.00
16	397220016	M350S-18-16-3	397220116	M350S-18-16-1	2.26	57.4	2.067	52.50
17	397220017	M350S-18-17-3	397220117	M350S-18-17-1	2.40	60.9	2.205	56.00
18	397220018	M350S-18-18-3	397220118	M350S-18-18-1	2.54	64.4	2.343	59.50
19	397220019	M350S-18-19-3	397220119	M350S-18-19-1	2.67	67.9	2.480	63.00
20	397220020	M350S-18-20-3	397220120	M350S-18-20-1	2.81	71.4	2.618	66.50

REF. LAST 2 DIGITS OF PART NUMBER EQUALS NUMBER OF POLES

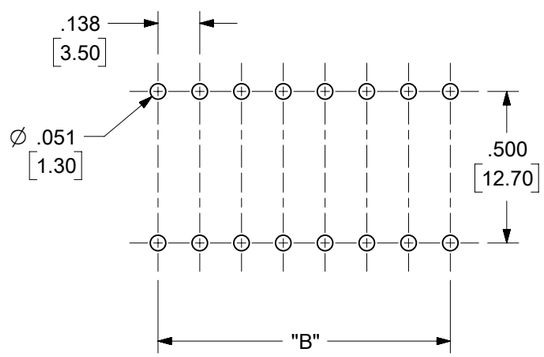

PCB LAYOUT

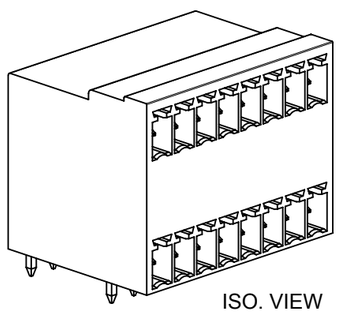

ISO. VIEW
(8 CRICUIT SHOWN)
(SCALE 1.5:1)

C

ENGINEERING NUMBER LEGEND

M350S -18- XX - X

SERIES
STYLE
POLES
COLOR:
1 = BLACK
3 = GREEN

** CONTACT FACTORY FOR ADDITIONAL LENGTHS AND COLORS NOT SHOWN

C

SPECIFICATIONS

1. MATERIAL:
   (A). BODY: PA66, UL94 V-0
   (B). TERMINAL: TIN PLATED BRASS
   (C). COVER: PA66, UL94 V-0
2. MAXIMUM ELECTRICAL RATING PER UL: 300V, 8A
3. DIELECTRIC VOLTAGE WITHSTAND: 2500VAC FOR 1 MINUTE
4. INSULATION RESISTANCE: 500VDC, 500MΩ
5. MAXIMUM OPERATING TEMPERATURE: -40°C TO +115°C
6. MAXIMUM SOLDER TEMPERATURE: 260°C FOR 5 SECONDS

TOLERANCES

MM	TOL	INCH	TOL
0-6	±0.25	0-.24	±.010
>6-30	±0.40	.24-1.18	±.016
>30-120	±0.50	1.18-4.76	±.020
>120	±0.80	>4.76	±.031

FUNCTIONAL SYMBOLS
E/A = 0
E/C = 0
E/P = 0
DIVISIONAL SYMBOLS

THIS DRAWING CONTAINS INFORMATION THAT IS PROPRIETARY TO MOLEX ELECTRONIC TECHNOLOGIES, LLC AND SHOULD NOT BE USED WITHOUT WRITTEN PERMISSION

DIMENSION UNITS: INCH/MM
SCALE: 2:1

GENERAL TOLERANCES (UNLESS SPECIFIED)

	MM	INCH
4 PLACES	± ---	± ---
3 PLACES	± ---	± SEE CHART
2 PLACES	± SEE CHART	± SEE CHART
1 PLACE	± SEE CHART	± ---
0 PLACES	± ---	± ---
ANGULAR TOL	± ---	

DRAFT WHERE APPLICABLE MUST REMAIN WITHIN DIMENSIONS

CURRENT REV DESC: MIGRATED TO ECTR/NX, ADDED PNS FOR GREEN HOUSING 13-20 & FOR BLACK HOUSING 02-20 POLES. ADDED ISOMETRIC VIEW & UPDATED NOTES.

EC NO: 862614
DRWN: ADIKAB 2026/06/24
CHK'D: ROLANM 2026/08/11
APPR: HKNEELAND 2026/08/14

INITIAL REVISION:
DRWN: RSTONE 2014/01/21
APPR: JFMURPHY 2014/10/16

THIRD ANGLE PROJECTION | DRAWING: B-SIZE | SERIES: 39722

molex

3.50MM EURO HEADER
RIGHT ANGLE DUAL ROW

PRODUCT CUSTOMER DRAWING

DOCUMENT NUMBER	DOC TYPE	DOC PART	REVISION
SD-39722-001	PSD	001	C

MATERIAL NUMBER	CUSTOMER	SHEET NUMBER
SEE TABLE	GENERAL MARKET	1 OF 1

DOCUMENT STATUS	P1	RELEASE DATE	2026/08/14 23:00:12

FORMAT: Eng-lega-master-tb-prod-B
REVISION: E1
DATE: 2021/05/01