Ordering number : EN6260C

3LN01C

N-Channel Small Signal MOSFET
30V, 0.15A, 3.7Ω, Single CP

ON Semiconductor®

http://onsemi.com

Features

- Low ON-resistance
- Ultrahigh-speed switching
- 2.5V drive

Specifications

Absolute Maximum Ratings at Ta=25°C

Parameter	Symbol	Conditions	Ratings	Unit
Drain to Source Voltage	V_{DSS}		30	V
Gate to Source Voltage	V_{GSS}		±10	V
Drain Current (DC)	I_D		0.15	A
Drain Current (Pulse)	I_{DP}	PW≤10μs, duty cycle≤1%	0.6	A
Allowable Power Dissipation	P_D		0.25	W
Channel Temperature	Tch		150	°C
Storage Temperature	Tstg		−55 to +150	°C

This product is designed to "ESD immunity < 200V*", so please take care when handling.

* Machine Model

Stresses exceeding Maximum Ratings may damage the device. Maximum Ratings are stress ratings only. Functional operation above the Recommended Operating Conditions is not implied. Extended exposure to stresses above the Recommended Operating Conditions may affect device reliability.

Package Dimensions

unit : mm (typ)

7013A-013

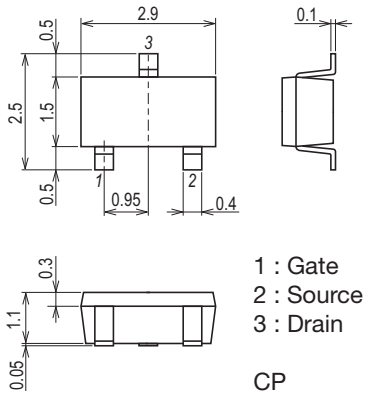

3LN01C-TB-E
3LN01C-TB-H

1 : Gate
2 : Source
3 : Drain

CP

Ordering & Package Information

Device	Package	Shipping	memo
3LN01C-TB-E	CP SC-59, TO-236, SOT-23, TO-236AB	3,000 pcs./reel	Pb-Free
3LN01C-TB-H	CP SC-59, TO-236, SOT-23, TO-236AB	3,000 pcs./reel	Pb-Free and Halogen Free

Packing Type: TB

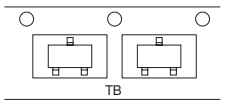

Marking

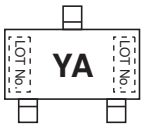

Electrical Connection

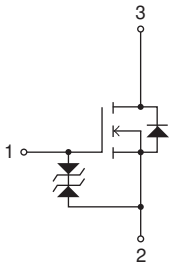

Electrical Characteristics at Ta=25°C

Parameter	Symbol	Conditions	Ratings			Unit
			min	typ	max	
Drain to Source Breakdown Voltage	$V_{(BR)DSS}$	I_D=1mA, V_{GS}=0V	30			V
Zero-Gate Voltage Drain Current	I_{DSS}	V_{DS}=30V, V_{GS}=0V			1	μA
Gate to Source Leakage Current	I_{GSS}	V_{GS}=±8V, V_{DS}=0V			±10	μA
Cutoff Voltage	V_{GS}(off)	V_{DS}=10V, I_D=100μA	0.4		1.3	V
Forward Transfer Admittance	| yfs |	V_{DS}=10V, I_D=80mA	0.15	0.22		S
Static Drain to Source On-State Resistance	R_{DS}(on)1	I_D=80mA, V_{GS}=4V		2.9	3.7	Ω
	R_{DS}(on)2	I_D=40mA, V_{GS}=2.5V		3.7	5.2	Ω
	R_{DS}(on)3	I_D=10mA, V_{GS}=1.5V		6.4	12.8	Ω
Input Capacitance	Ciss	V_{DS}=10V, f=1MHz		7.0		pF
Output Capacitance	Coss			5.9		pF
Reverse Transfer Capacitance	Crss			2.3		pF
Turn-ON Delay Time	t_d(on)	See specified Test Circuit.		19		ns
Rise Time	t_r			65		ns
Turn-OFF Delay Time	t_d(off)			155		ns
Fall Time	t_f			120		ns
Total Gate Charge	Qg	V_{DS}=10V, V_{GS}=10V, I_D=150mA		1.58		nC
Gate to Source Charge	Qgs			0.26		nC
Gate to Drain “Miller” Charge	Qgd			0.31		nC
Diode Forward Voltage	V_{SD}	I_S=150mA, V_{GS}=0V		0.87	1.2	V

Switching Time Test Circuit

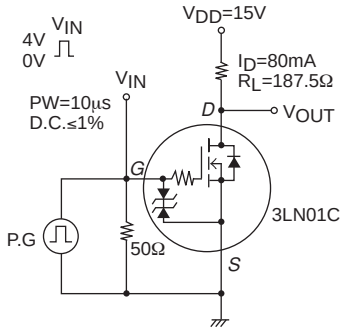

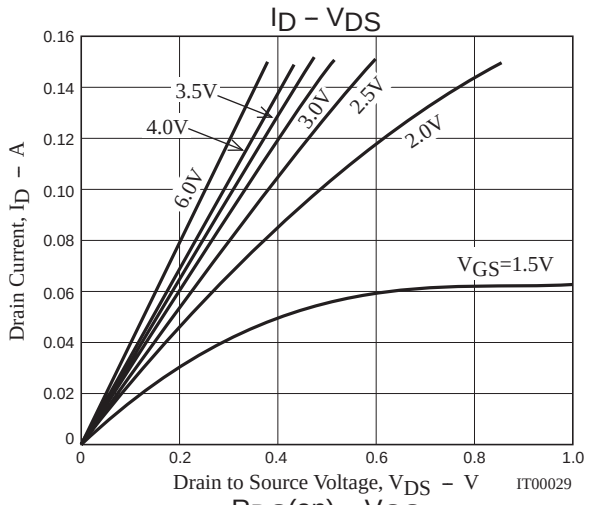
ID – VDS
Drain Current, ID – A
Drain to Source Voltage, VDS – V
3.5V
4.0V
6.0V
3.0V
2.5V
2.0V
VGS=1.5V
IT00029

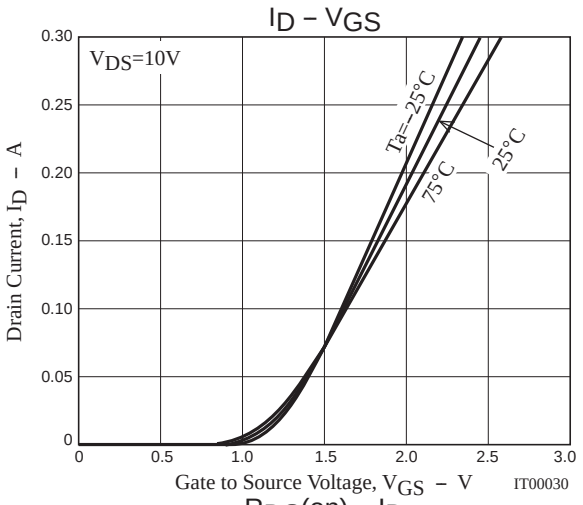
ID – VGS
VDS=10V
Drain Current, ID – A
Gate to Source Voltage, VGS – V
Ta=–25°C
25°C
75°C
IT00030

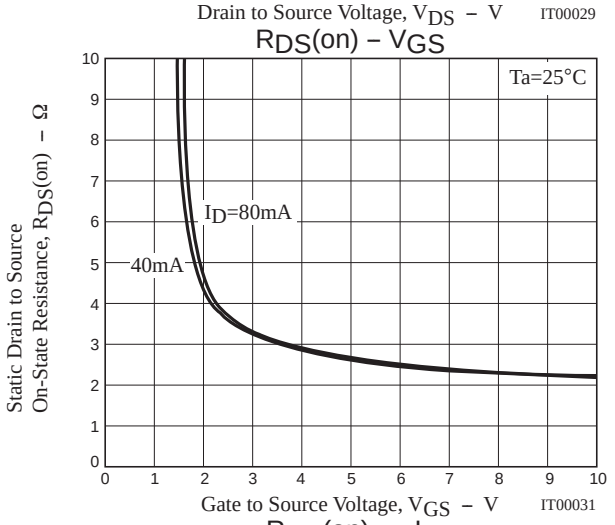
RDS(on) – VGS
Ta=25°C
Static Drain to Source
On-State Resistance, RDS(on) – Ω
ID=80mA
40mA
Gate to Source Voltage, VGS – V
IT00031

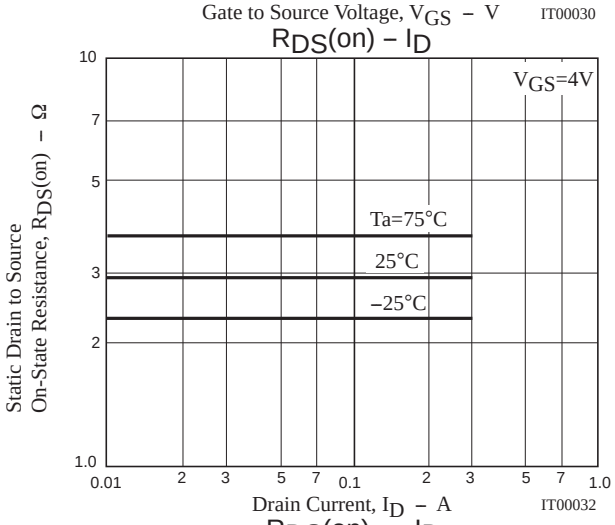
RDS(on) – ID
VGS=4V
Static Drain to Source
On-State Resistance, RDS(on) – Ω
Ta=75°C
25°C
–25°C
Drain Current, ID – A
IT00032

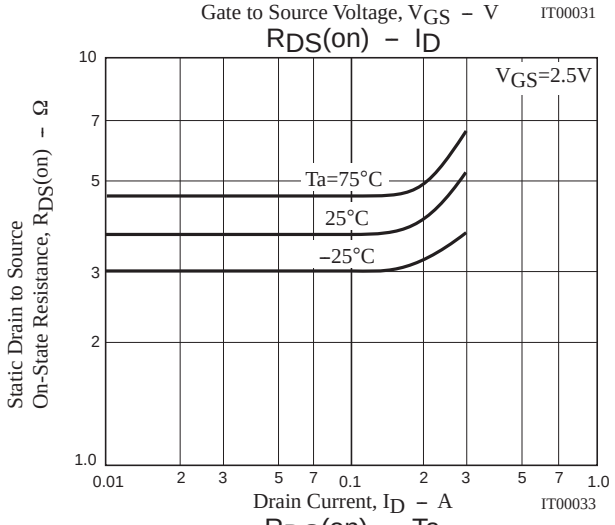
RDS(on) – ID
VGS=2.5V
Static Drain to Source
On-State Resistance, RDS(on) – Ω
Ta=75°C
25°C
–25°C
Drain Current, ID – A
IT00033

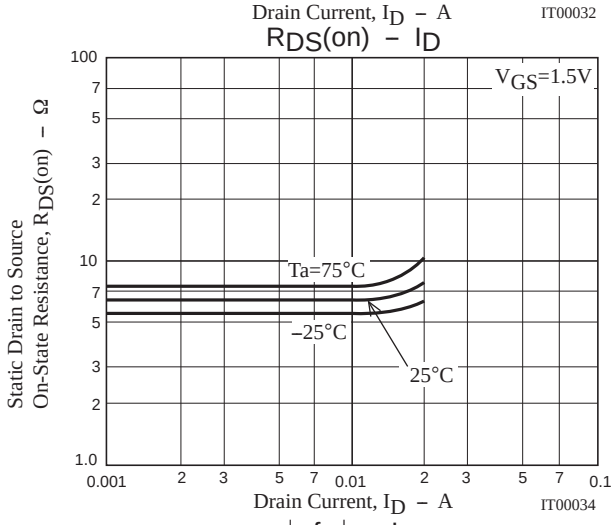
RDS(on) – ID
VGS=1.5V
Static Drain to Source
On-State Resistance, RDS(on) – Ω
Ta=75°C
–25°C
25°C
Drain Current, ID – A
IT00034

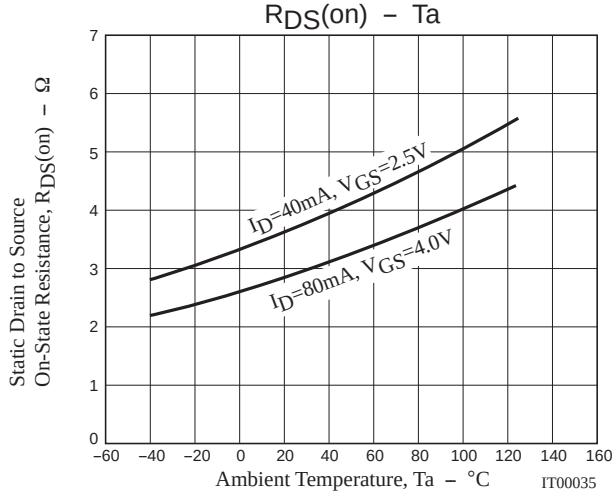
RDS(on) – Ta
Static Drain to Source
On-State Resistance, RDS(on) – Ω
ID=40mA, VGS=2.5V
ID=80mA, VGS=4.0V
Ambient Temperature, Ta – °C
IT00035

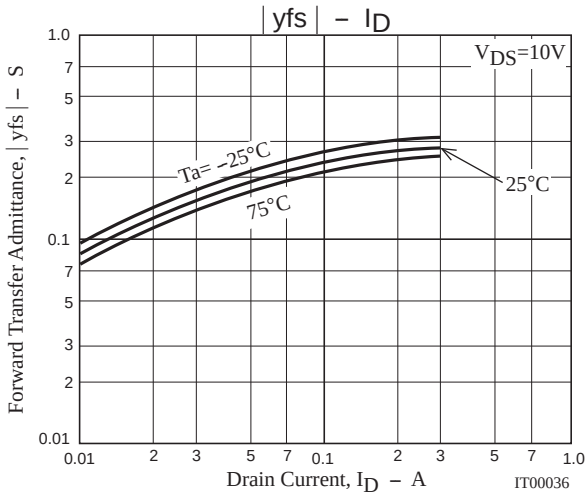
|yfs| – ID
VDS=10V
Forward Transfer Admittance, |yfs| – S
Ta= –25°C
75°C
25°C
Drain Current, ID – A
IT00036

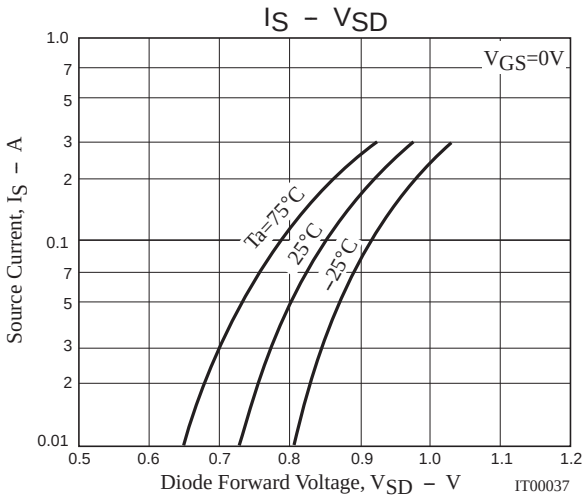
IS – VSD
VGS=0V
Ta=75°C
25°C
–25°C
Source Current, IS – A
Diode Forward Voltage, VSD – V
IT00037

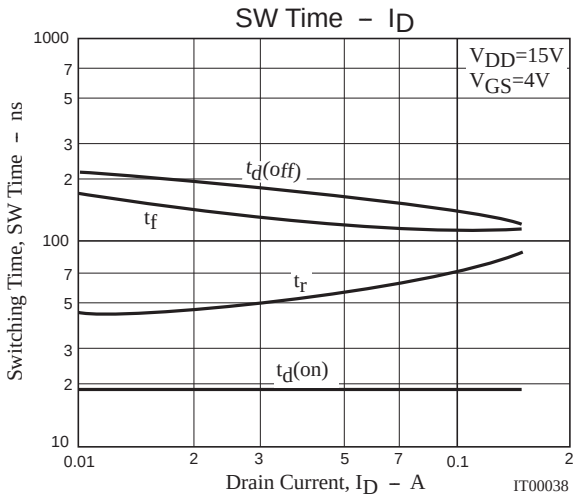
SW Time – ID
VDD=15V
VGS=4V
td(off)
tf
tr
td(on)
Switching Time, SW Time – ns
Drain Current, ID – A
IT00038

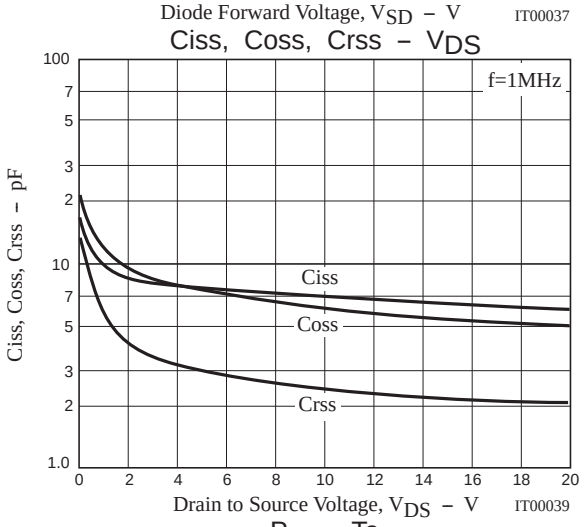
Ciss, Coss, Crss – VDS
f=1MHz
Ciss
Coss
Crss
Ciss, Coss, Crss – pF
Drain to Source Voltage, VDS – V
IT00039

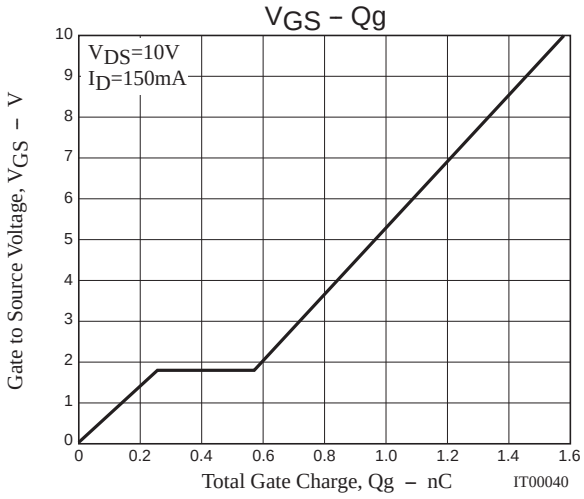
VGS – Qg
VDS=10V
ID=150mA
Gate to Source Voltage, VGS – V
Total Gate Charge, Qg – nC
IT00040

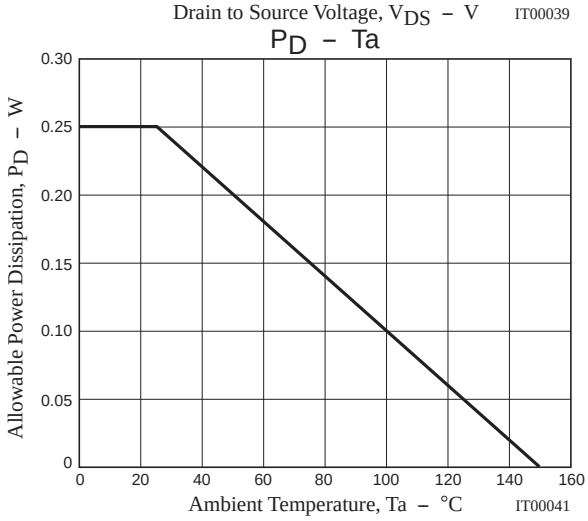
PD – Ta
Allowable Power Dissipation, PD – W
Ambient Temperature, Ta – °C
IT00041

Outline Drawing

3LN01C-TB-E, 3LN01C-TB-H

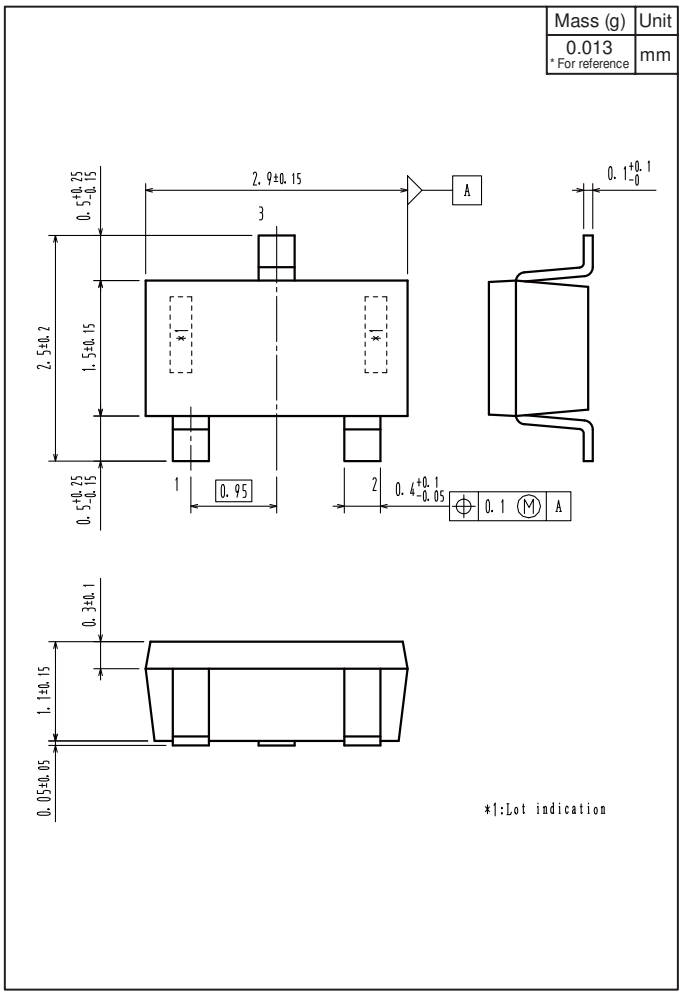

Land Pattern Example

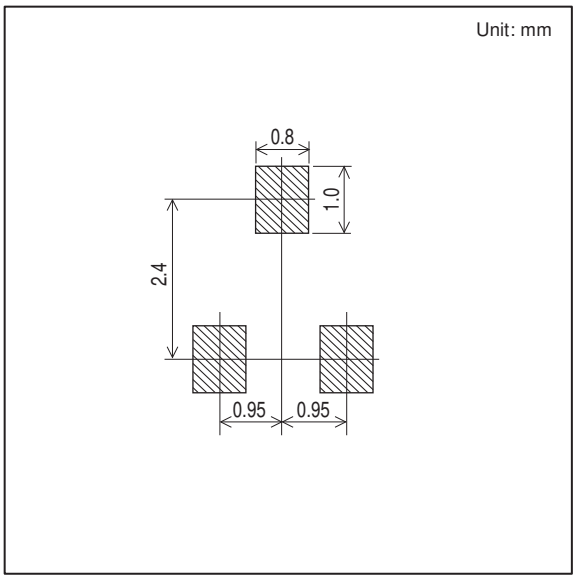

Note on usage : Since the 3LN01C is a MOSFET product, please avoid using this device in the vicinity of highly charged objects.

ON Semiconductor and the ON logo are registered trademarks of Semiconductor Components Industries, LLC (SCILLC). SCILLC owns the rights to a number of patents, trademarks, copyrights, trade secrets, and other intellectual property. A listing of SCILLC's product/patent coverage may be accessed at www.onsemi.com/site/pdf/Patent-Marking.pdf. SCILLC reserves the right to make changes without further notice to any products herein. SCILLC makes no warranty, representation or guarantee regarding the suitability of its products for any particular purpose, nor does SCILLC assume any liability arising out of the application or use of any product or circuit, and specifically disclaims any and all liability, including without limitation special, consequential or incidental damages. "Typical" parameters which may be provided in SCILLC data sheets and/or specifications can and do vary in different applications and actual performance may vary over time. All operating parameters, including "Typicals" must be validated for each customer application by customer's technical experts. SCILLC does not convey any license under its patent rights nor the rights of others. SCILLC products are not designed, intended, or authorized for use as components in systems intended for surgical implant into the body, or other applications intended to support or sustain life, or for any other application in which the failure of the SCILLC product could create a situation where personal injury or death may occur. Should Buyer purchase or use SCILLC products for any such unintended or unauthorized application, Buyer shall indemnify and hold SCILLC and its officers, employees, subsidiaries, affiliates, and distributors harmless against all claims, costs, damages, and expenses, and reasonable attorney fees arising out of, directly or indirectly, any claim of personal injury or death associated with such unintended or unauthorized use, even if such claim alleges that SCILLC was negligent regarding the design or manufacture of the part. SCILLC is an Equal Opportunity/Affirmative Action Employer. This literature is subject to all applicable copyright laws and is not for resale in any manner.