PIC16F627A/628A/648A
Data Sheet

Flash-Based, 8-Bit CMOS

Microcontrollers with nanoWatt Technology

© 2009 Microchip Technology Inc.

Note the following details of the code protection feature on Microchip devices:

- Microchip products meet the specification contained in their particular Microchip Data Sheet.
- Microchip believes that its family of products is one of the most secure families of its kind on the market today, when used in the intended manner and under normal conditions.
- There are dishonest and possibly illegal methods used to breach the code protection feature. All of these methods, to our knowledge, require using the Microchip products in a manner outside the operating specifications contained in Microchip's Data Sheets. Most likely, the person doing so is engaged in theft of intellectual property.
- Microchip is willing to work with the customer who is concerned about the integrity of their code.
- Neither Microchip nor any other semiconductor manufacturer can guarantee the security of their code. Code protection does not mean that we are guaranteeing the product as "unbreakable."

Code protection is constantly evolving. We at Microchip are committed to continuously improving the code protection features of our products. Attempts to break Microchip's code protection feature may be a violation of the Digital Millennium Copyright Act. If such acts allow unauthorized access to your software or other copyrighted work, you may have a right to sue for relief under that Act.

Information contained in this publication regarding device applications and the like is provided only for your convenience and may be superseded by updates. It is your responsibility to ensure that your application meets with your specifications. MICROCHIP MAKES NO REPRESENTATIONS OR WARRANTIES OF ANY KIND WHETHER EXPRESS OR IMPLIED, WRITTEN OR ORAL, STATUTORY OR OTHERWISE, RELATED TO THE INFORMATION, INCLUDING BUT NOT LIMITED TO ITS CONDITION, QUALITY, PERFORMANCE, MERCHANTABILITY OR FITNESS FOR PURPOSE**.** Microchip disclaims all liability arising from this information and its use. Use of Microchip devices in life support and/or safety applications is entirely at the buyer's risk, and the buyer agrees to defend, indemnify and hold harmless Microchip from any and all damages, claims, suits, or expenses resulting from such use. No licenses are conveyed, implicitly or otherwise, under any Microchip intellectual property rights.

Trademarks

The Microchip name and logo, the Microchip logo, dsPIC, KEELOQ, KEELOQ logo, MPLAB, PIC, PICmicro, PICSTART, rfPIC and UNI/O are registered trademarks of Microchip Technology Incorporated in the U.S.A. and other countries.

FilterLab, Hampshire, HI-TECH C, Linear Active Thermistor, MXDEV, MXLAB, SEEVAL and The Embedded Control Solutions Company are registered trademarks of Microchip Technology Incorporated in the U.S.A.

Analog-for-the-Digital Age, Application Maestro, CodeGuard, dsPICDEM, dsPICDEM.net, dsPICworks, dsSPEAK, ECAN, ECONOMONITOR, FanSense, HI-TIDE, In-Circuit Serial Programming, ICSP, Mindi, MiWi, MPASM, MPLAB Certified logo, MPLIB, MPLINK, mTouch, Octopus, Omniscient Code Generation, PICC, PICC-18, PICDEM, PICDEM.net, PICkit, PICtail, PIC^{32} logo, REAL ICE, rfLAB, Select Mode, Total Endurance, TSHARC, UniWinDriver, WiperLock and ZENA are trademarks of Microchip Technology Incorporated in the U.S.A. and other countries.

SQTP is a service mark of Microchip Technology Incorporated in the U.S.A.

All other trademarks mentioned herein are property of their respective companies.

© 2009, Microchip Technology Incorporated, Printed in the U.S.A., All Rights Reserved.

Printed on recycled paper.

QUALITY MANAGEMENT SYSTEM
CERTIFIED BY DNV
ISO/TS 16949:2002

Microchip received ISO/TS-16949:2002 certification for its worldwide headquarters, design and wafer fabrication facilities in Chandler and Tempe, Arizona; Gresham, Oregon and design centers in California and India. The Company's quality system processes and procedures are for its PIC® MCUs and dsPIC® DSCs, KEELOQ® code hopping devices, Serial EEPROMs, microperipherals, nonvolatile memory and analog products. In addition, Microchip's quality system for the design and manufacture of development systems is ISO 9001:2000 certified.

PIC16F627A/628A/648A

18-pin Flash-Based, 8-Bit CMOS Microcontrollers with nanoWatt Technology

High-Performance RISC CPU:

- Operating speeds from DC – 20 MHz
- Interrupt capability
- 8-level deep hardware stack
- Direct, Indirect and Relative Addressing modes
- 35 single-word instructions:
  - All instructions single cycle except branches

Special Microcontroller Features:

- Internal and external oscillator options:
  - Precision internal 4 MHz oscillator factory calibrated to ±1%
  - Low-power internal 48 kHz oscillator
  - External Oscillator support for crystals and resonators
- Power-saving Sleep mode
- Programmable weak pull-ups on PORTB
- Multiplexed Master Clear/Input-pin
- Watchdog Timer with independent oscillator for reliable operation
- Low-voltage programming
- In-Circuit Serial Programming™ (via two pins)
- Programmable code protection
- Brown-out Reset
- Power-on Reset
- Power-up Timer and Oscillator Start-up Timer
- Wide operating voltage range (2.0-5.5V)
- Industrial and extended temperature range
- High-Endurance Flash/EEPROM cell:
  - 100,000 write Flash endurance
  - 1,000,000 write EEPROM endurance
  - 40 year data retention

Low-Power Features:

- Standby Current:
  - 100 nA @ 2.0V, typical
- Operating Current:
  - 12 μA @ 32 kHz, 2.0V, typical
  - 120 μA @ 1 MHz, 2.0V, typical
- Watchdog Timer Current:
  - 1 μA @ 2.0V, typical
- Timer1 Oscillator Current:
  - 1.2 μA @ 32 kHz, 2.0V, typical
- Dual-speed Internal Oscillator:
  - Run-time selectable between 4 MHz and 48 kHz
  - 4 μs wake-up from Sleep, 3.0V, typical

Peripheral Features:

- 16 I/O pins with individual direction control
- High current sink/source for direct LED drive
- Analog comparator module with:
  - Two analog comparators
  - Programmable on-chip voltage reference (V_{REF}) module
  - Selectable internal or external reference
  - Comparator outputs are externally accessible
- Timer0: 8-bit timer/counter with 8-bit programmable prescaler
- Timer1: 16-bit timer/counter with external crystal/clock capability
- Timer2: 8-bit timer/counter with 8-bit period register, prescaler and postscaler
- Capture, Compare, PWM module:
  - 16-bit Capture/Compare
  - 10-bit PWM
- Addressable Universal Synchronous/Asynchronous Receiver/Transmitter USART/SCI

Device	Program Memory	Data Memory		I/O	CCP (PWM)	USART	Comparators	Timers 8/16-bit
	Flash (words)	SRAM (bytes)	EEPROM (bytes)					
PIC16F627A	1024	224	128	16	1	Y	2	2/1
PIC16F628A	2048	224	128	16	1	Y	2	2/1
PIC16F648A	4096	256	256	16	1	Y	2	2/1

© 2009 Microchip Technology Inc.

Pin Diagrams

PDIP, SOIC

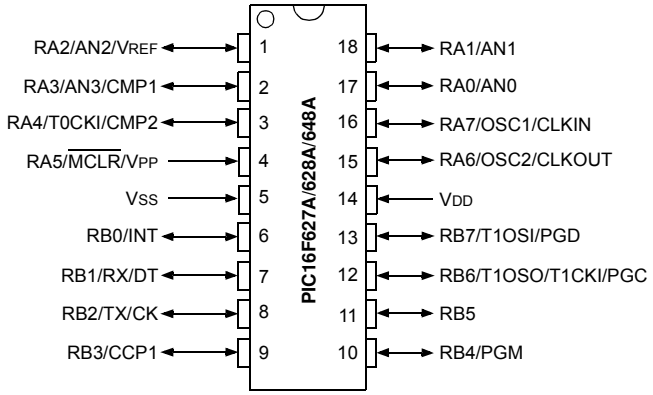

SSOP

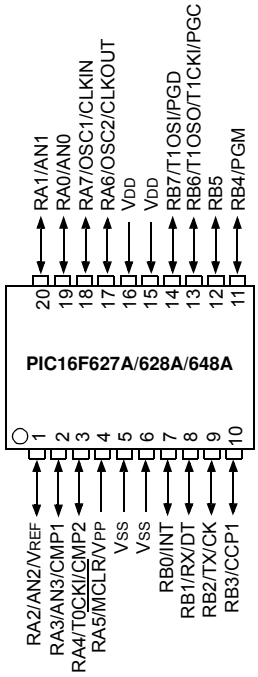

28-Pin QFN

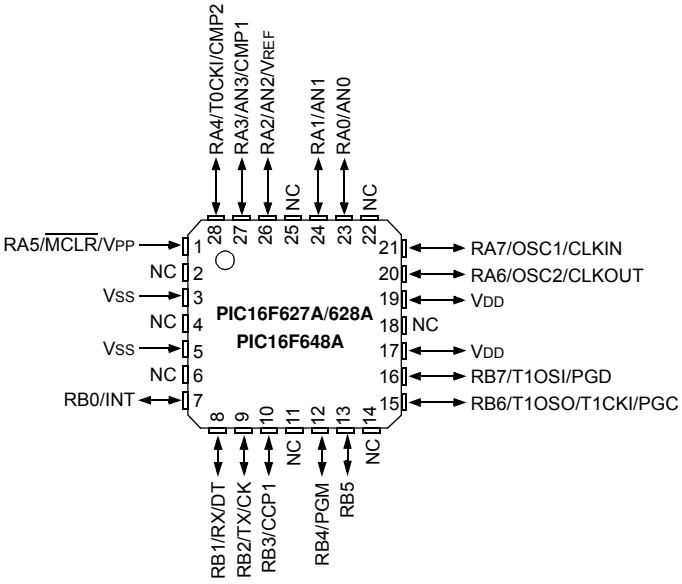

© 2009 Microchip Technology Inc.

Table of Contents

1.0 General Description 7
2.0 PIC16F627A/628A/648A Device Varieties 9
3.0 Architectural Overview 11
4.0 Memory Organization 17
5.0 I/O Ports 33
6.0 Timer0 Module 47
7.0 Timer1 Module 50
8.0 Timer2 Module 54
9.0 Capture/Compare/PWM (CCP) Module 57
10.0 Comparator Module 63
11.0 Voltage Reference Module 69
12.0 Universal Synchronous Asynchronous Receiver Transmitter (USART) Module 73
13.0 Data EEPROM Memory 91
14.0 Special Features of the CPU 97
15.0 Instruction Set Summary 117
16.0 Development Support 131
17.0 Electrical Specifications 135
18.0 DC and AC Characteristics Graphs and Tables 151
19.0 Packaging Information 163
Appendix A: Data Sheet Revision History 171
Appendix B: Device Differences 171
Appendix C: Device Migrations 172
Appendix D: Migrating from other PIC® Devices 172
The Microchip Web Site 173
Customer Change Notification Service 173
Customer Support 173
Reader Response 174
Product Identification System 179

TO OUR VALUED CUSTOMERS

It is our intention to provide our valued customers with the best documentation possible to ensure successful use of your Microchip products. To this end, we will continue to improve our publications to better suit your needs. Our publications will be refined and enhanced as new volumes and updates are introduced.

If you have any questions or comments regarding this publication, please contact the Marketing Communications Department via E-mail at **docerrors@microchip.com** or fax the **Reader Response Form** in the back of this data sheet to (480) 792-4150. We welcome your feedback.

Most Current Data Sheet

To obtain the most up-to-date version of this data sheet, please register at our Worldwide Web site at:

http://www.microchip.com

You can determine the version of a data sheet by examining its literature number found on the bottom outside corner of any page. The last character of the literature number is the version number, (e.g., DS30000A is version A of document DS30000).

Errata

An errata sheet, describing minor operational differences from the data sheet and recommended workarounds, may exist for current devices. As device/documentation issues become known to us, we will publish an errata sheet. The errata will specify the revision of silicon and revision of document to which it applies.

To determine if an errata sheet exists for a particular device, please check with one of the following:

- Microchip's Worldwide Web site; http://www.microchip.com
- Your local Microchip sales office (see last page)

When contacting a sales office, please specify which device, revision of silicon and data sheet (include literature number) you are using.

Customer Notification System

Register on our web site at **www.microchip.com** to receive the most current information on all of our products.

NOTES:

© 2009 Microchip Technology Inc.

1.0 GENERAL DESCRIPTION

The PIC16F627A/628A/648A are 18-pin Flash-based members of the versatile PIC16F627A/628A/648A family of low-cost, high-performance, CMOS, fully-static, 8-bit microcontrollers.

All PIC® microcontrollers employ an advanced RISC architecture. The PIC16F627A/628A/648A have enhanced core features, an eight-level deep stack, and multiple internal and external interrupt sources. The separate instruction and data buses of the Harvard architecture allow a 14-bit wide instruction word with the separate 8-bit wide data. The two-stage instruction pipeline allows all instructions to execute in a single-cycle, except for program branches (which require two cycles). A total of 35 instructions (reduced instruction set) are available, complemented by a large register set.

PIC16F627A/628A/648A microcontrollers typically achieve a 2:1 code compression and a 4:1 speed improvement over other 8-bit microcontrollers in their class.

PIC16F627A/628A/648A devices have integrated features to reduce external components, thus reducing system cost, enhancing system reliability and reducing power consumption.

The PIC16F627A/628A/648A has 8 oscillator configurations. The single-pin RC oscillator provides a low-cost solution. The LP oscillator minimizes power consumption, XT is a standard crystal, and INTOSC is a self-contained precision two-speed internal oscillator. The HS mode is for High-Speed crystals. The EC mode is for an external clock source.

The Sleep (Power-down) mode offers power savings. Users can wake-up the chip from Sleep through several external interrupts, internal interrupts and Resets.

A highly reliable Watchdog Timer with its own on-chip RC oscillator provides protection against software lock-up.

Table 1-1 shows the features of the PIC16F627A/628A/648A mid-range microcontroller family.

A simplified block diagram of the PIC16F627A/628A/648A is shown in Figure 3-1.

The PIC16F627A/628A/648A series fits in applications ranging from battery chargers to low power remote sensors. The Flash technology makes customizing application programs (detection levels, pulse generation, timers, etc.) extremely fast and convenient. The small footprint packages makes this microcontroller series ideal for all applications with space limitations. Low cost, low power, high performance, ease of use and I/O flexibility make the PIC16F627A/628A/648A very versatile.

1.1 Development Support

The PIC16F627A/628A/648A family is supported by a full-featured macro assembler, a software simulator, an in-circuit emulator, a low cost in-circuit debugger, a low cost development programmer and a full-featured programmer. A Third Party “C” compiler support tool is also available.

TABLE 1-1: PIC16F627A/628A/648A FAMILY OF DEVICES

		PIC16F627A	PIC16F628A	PIC16F648A	PIC16LF627A	PIC16LF628A	PIC16LF648A
Clock	Maximum Frequency of Operation (MHz)	20	20	20	20	20	20
Memory	Flash Program Memory (words)	1024	2048	4096	1024	2048	4096
	RAM Data Memory (bytes)	224	224	256	224	224	256
	EEPROM Data Memory (bytes)	128	128	256	128	128	256
Peripherals	Timer module(s)	TMR0, TMR1, TMR2	TMR0, TMR1, TMR2	TMR0, TMR1, TMR2	TMR0, TMR1, TMR2	TMR0, TMR1, TMR2	TMR0, TMR1, TMR2
	Comparator(s)	2	2	2	2	2	2
	Capture/Compare/ PWM modules	1	1	1	1	1	1
	Serial Communications	USART	USART	USART	USART	USART	USART
	Internal Voltage Reference	Yes	Yes	Yes	Yes	Yes	Yes
Features	Interrupt Sources	10	10	10	10	10	10
	I/O Pins	16	16	16	16	16	16
	Voltage Range (Volts)	3.0-5.5	3.0-5.5	3.0-5.5	2.0-5.5	2.0-5.5	2.0-5.5
	Brown-out Reset	Yes	Yes	Yes	Yes	Yes	Yes
	Packages	18-pin DIP, SOIC, 20-pin SSOP, 28-pin QFN	18-pin DIP, SOIC, 20-pin SSOP, 28-pin QFN	18-pin DIP, SOIC, 20-pin SSOP, 28-pin QFN	18-pin DIP, SOIC, 20-pin SSOP, 28-pin QFN	18-pin DIP, SOIC, 20-pin SSOP, 28-pin QFN	18-pin DIP, SOIC, 20-pin SSOP, 28-pin QFN

All PIC® family devices have Power-on Reset, selectable Watchdog Timer, selectable code-protect and high I/O current capability.
All PIC16F627A/628A/648A family devices use serial programming with clock pin RB6 and data pin RB7.

NOTES:

© 2009 Microchip Technology Inc.

2.0 PIC16F627A/628A/648A DEVICE VARIETIES

A variety of frequency ranges and packaging options are available. Depending on application and production requirements, the proper device option can be selected using the information in the PIC16F627A/628A/648A Product Identification System, at the end of this data sheet. When placing orders, please use this page of the data sheet to specify the correct part number.

2.1 Flash Devices

Flash devices can be erased and re-programmed electrically. This allows the same device to be used for prototype development, pilot programs and production.

A further advantage of the electrically erasable Flash is that it can be erased and reprogrammed in-circuit, or by device programmers, such as Microchip's PICSTART® Plus or PRO MATE® II programmers.

2.2 Quick-Turnaround-Production (QTP) Devices

Microchip offers a QTP Programming Service for factory production orders. This service is made available for users who chose not to program a medium to high quantity of units and whose code patterns have stabilized. The devices are standard Flash devices, but with all program locations and configuration options already programmed by the factory. Certain code and prototype verification procedures apply before production shipments are available. Please contact your Microchip Technology sales office for more details.

2.3 Serialized Quick-Turnaround-Production (SQTP℠) Devices

Microchip offers a unique programming service where a few user-defined locations in each device are programmed with different serial numbers. The serial numbers may be random, pseudo-random or sequential.

Serial programming allows each device to have a unique number, which can serve as an entry-code, password or ID number.

NOTES:

© 2009 Microchip Technology Inc.

3.0 ARCHITECTURAL OVERVIEW

The high performance of the PIC16F627A/628A/648A family can be attributed to a number of architectural features commonly found in RISC microprocessors. To begin with, the PIC16F627A/628A/648A uses a Harvard architecture in which program and data are accessed from separate memories using separate busses. This improves bandwidth over traditional Von Neumann architecture where program and data are fetched from the same memory. Separating program and data memory further allows instructions to be sized differently than 8-bit wide data word. Instruction opcodes are 14-bits wide making it possible to have all single-word instructions. A 14-bit wide program memory access bus fetches a 14-bit instruction in a single cycle. A two-stage pipeline overlaps fetch and execution of instructions. Consequently, all instructions (35) execute in a single-cycle (200 ns @ 20 MHz) except for program branches.

Table 3-1 lists device memory sizes (Flash, Data and EEPROM).

TABLE 3-1: DEVICE MEMORY LIST

Device	Memory		
	Flash Program	RAM Data	EEPROM Data
PIC16F627A	1024 x 14	224 x 8	128 x 8
PIC16F628A	2048 x 14	224 x 8	128 x 8
PIC16F648A	4096 x 14	256 x 8	256 x 8
PIC16LF627A	1024 x 14	224 x 8	128 x 8
PIC16LF628A	2048 x 14	224 x 8	128 x 8
PIC16LF648A	4096 x 14	256 x 8	256 x 8

The PIC16F627A/628A/648A can directly or indirectly address its register files or data memory. All Special Function Registers (SFR), including the program counter, are mapped in the data memory. The PIC16F627A/628A/648A have an orthogonal (symmetrical) instruction set that makes it possible to carry out any operation, on any register, using any addressing mode. This symmetrical nature and lack of ‘special optimal situations’ makes programming with the PIC16F627A/628A/648A simple yet efficient. In addition, the learning curve is reduced significantly.

The PIC16F627A/628A/648A devices contain an 8-bit ALU and working register. The ALU is a general purpose arithmetic unit. It performs arithmetic and Boolean functions between data in the working register and any register file.

The ALU is 8-bits wide and capable of addition, subtraction, shift and logical operations. Unless otherwise mentioned, arithmetic operations are two’s complement in nature. In two-operand instructions, typically one operand is the working register (W register). The other operand is a file register or an immediate constant. In single operand instructions, the operand is either the W register or a file register.

The W register is an 8-bit working register used for ALU operations. It is not an addressable register.

Depending on the instruction executed, the ALU may affect the values of the Carry (C), Digit Carry (DC), and Zero (Z) bits in the Status Register. The C and DC bits operate as Borrow and Digit Borrow out bits, respectively, in subtraction. See the `SUBLW` and `SUBWF` instructions for examples.

A simplified block diagram is shown in Figure 3-1, and a description of the device pins in Table 3-2.

Two types of data memory are provided on the PIC16F627A/628A/648A devices. Nonvolatile EEPROM data memory is provided for long term storage of data, such as calibration values, look-up table data, and any other data which may require periodic updating in the field. These data types are not lost when power is removed. The other data memory provided is regular RAM data memory. Regular RAM data memory is provided for temporary storage of data during normal operation. Data is lost when power is removed.

FIGURE 3-1: BLOCK DIAGRAM

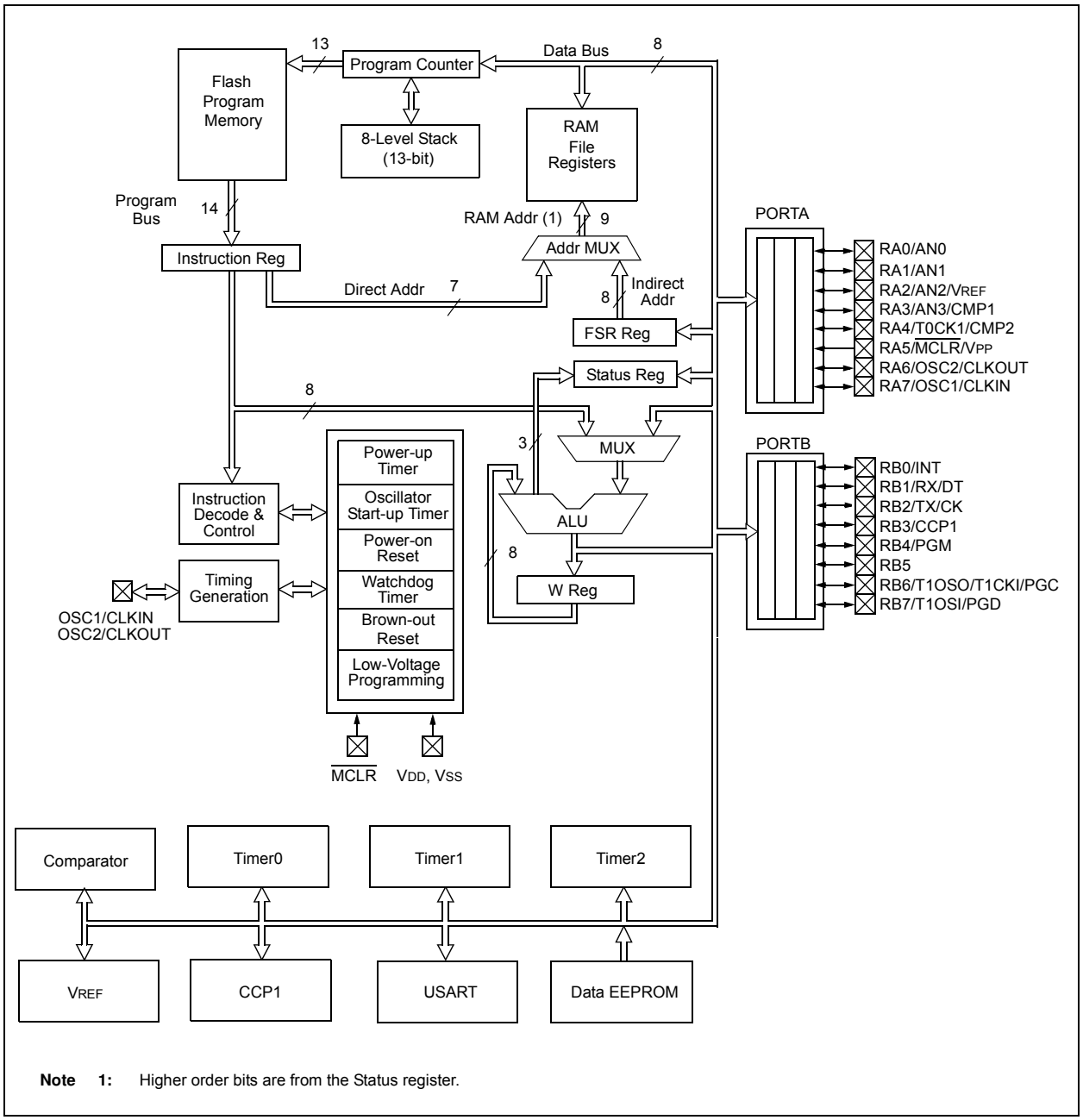

Note 1: Higher order bits are from the Status register.

© 2009 Microchip Technology Inc.

TABLE 3-2: PIC16F627A/628A/648A PINOUT DESCRIPTION

Name	Function	Input Type	Output Type	Description
RA0/AN0	RA0	ST	CMOS	Bidirectional I/O port
	AN0	AN	—	Analog comparator input
RA1/AN1	RA1	ST	CMOS	Bidirectional I/O port
	AN1	AN	—	Analog comparator input
RA2/AN2/VREF	RA2	ST	CMOS	Bidirectional I/O port
	AN2	AN	—	Analog comparator input
	VREF	—	AN	VREF output
RA3/AN3/CMP1	RA3	ST	CMOS	Bidirectional I/O port
	AN3	AN	—	Analog comparator input
	CMP1	—	CMOS	Comparator 1 output
RA4/T0CKI/CMP2	RA4	ST	OD	Bidirectional I/O port
	T0CKI	ST	—	Timer0 clock input
	CMP2	—	OD	Comparator 2 output
RA5/$\overline{\text{MCLR}}$/VPP	RA5	ST	—	Input port
	$\overline{\text{MCLR}}$	ST	—	Master clear. When configured as $\overline{\text{MCLR}}$, this pin is an active low Reset to the device. Voltage on $\overline{\text{MCLR}}$/VPP must not exceed VDD during normal device operation.
	VPP	—	—	Programming voltage input
RA6/OSC2/CLKOUT	RA6	ST	CMOS	Bidirectional I/O port
	OSC2	—	XTAL	Oscillator crystal output. Connects to crystal or resonator in Crystal Oscillator mode.
	CLKOUT	—	CMOS	In RC/INTOSC mode, OSC2 pin can output CLKOUT, which has 1/4 the frequency of OSC1.
RA7/OSC1/CLKIN	RA7	ST	CMOS	Bidirectional I/O port
	OSC1	XTAL	—	Oscillator crystal input
	CLKIN	ST	—	External clock source input. RC biasing pin.
RB0/INT	RB0	TTL	CMOS	Bidirectional I/O port. Can be software programmed for internal weak pull-up.
	INT	ST	—	External interrupt
RB1/RX/DT	RB1	TTL	CMOS	Bidirectional I/O port. Can be software programmed for internal weak pull-up.
	RX	ST	—	USART receive pin
	DT	ST	CMOS	Synchronous data I/O
RB2/TX/CK	RB2	TTL	CMOS	Bidirectional I/O port. Can be software programmed for internal weak pull-up.
	TX	—	CMOS	USART transmit pin
	CK	ST	CMOS	Synchronous clock I/O
RB3/CCP1	RB3	TTL	CMOS	Bidirectional I/O port. Can be software programmed for internal weak pull-up.
	CCP1	ST	CMOS	Capture/Compare/PWM I/O

Legend: O = Output; CMOS = CMOS Output; P = Power
— = Not used; I = Input; ST = Schmitt Trigger Input
TTL = TTL Input; OD = Open Drain Output; AN = Analog

TABLE 3-2: PIC16F627A/628A/648A PINOUT DESCRIPTION (CONTINUED)

Name	Function	Input Type	Output Type	Description
RB4/PGM	RB4	TTL	CMOS	Bidirectional I/O port. Interrupt-on-pin change. Can be software programmed for internal weak pull-up.
	PGM	ST	—	Low-voltage programming input pin. When low-voltage programming is enabled, the interrupt-on-pin change and weak pull-up resistor are disabled.
RB5	RB5	TTL	CMOS	Bidirectional I/O port. Interrupt-on-pin change. Can be software programmed for internal weak pull-up.
RB6/T1OSO/T1CKI/PGC	RB6	TTL	CMOS	Bidirectional I/O port. Interrupt-on-pin change. Can be software programmed for internal weak pull-up.
	T1OSO	—	XTAL	Timer1 oscillator output
	T1CKI	ST	—	Timer1 clock input
	PGC	ST	—	ICSP™ programming clock
RB7/T1OSI/PGD	RB7	TTL	CMOS	Bidirectional I/O port. Interrupt-on-pin change. Can be software programmed for internal weak pull-up.
	T1OSI	XTAL	—	Timer1 oscillator input
	PGD	ST	CMOS	ICSP data I/O
V_{SS}	V_{SS}	Power	—	Ground reference for logic and I/O pins
V_{DD}	V_{DD}	Power	—	Positive supply for logic and I/O pins

Legend: O = Output; — = Not used; TTL = TTL Input; CMOS = CMOS Output; I = Input; OD = Open Drain Output; P = Power; ST = Schmitt Trigger Input; AN = Analog

© 2009 Microchip Technology Inc.

3.1 Clocking Scheme/Instruction Cycle

The clock input (RA7/OSC1/CLKIN pin) is internally divided by four to generate four non-overlapping quadrature clocks namely Q1, Q2, Q3 and Q4. Internally, the Program Counter (PC) is incremented every Q1, the instruction is fetched from the program memory and latched into the instruction register in Q4. The instruction is decoded and executed during the following Q1 through Q4. The clocks and instruction execution flow is shown in Figure 3-2.

3.2 Instruction Flow/Pipelining

An instruction cycle consists of four Q cycles (Q1, Q2, Q3 and Q4). The instruction fetch and execute are pipelined such that fetch takes one instruction cycle while decode and execute takes another instruction cycle. However, due to the pipelining, each instruction effectively executes in one cycle. If an instruction causes the program counter to change (e.g., `GOTO`) then two cycles are required to complete the instruction (Example 3-1).

A fetch cycle begins with the program counter incrementing in Q1.

In the execution cycle, the fetched instruction is latched into the Instruction Register (IR) in cycle Q1. This instruction is then decoded and executed during the Q2, Q3 and Q4 cycles. Data memory is read during Q2 (operand read) and written during Q4 (destination write).

FIGURE 3-2: CLOCK/INSTRUCTION CYCLE

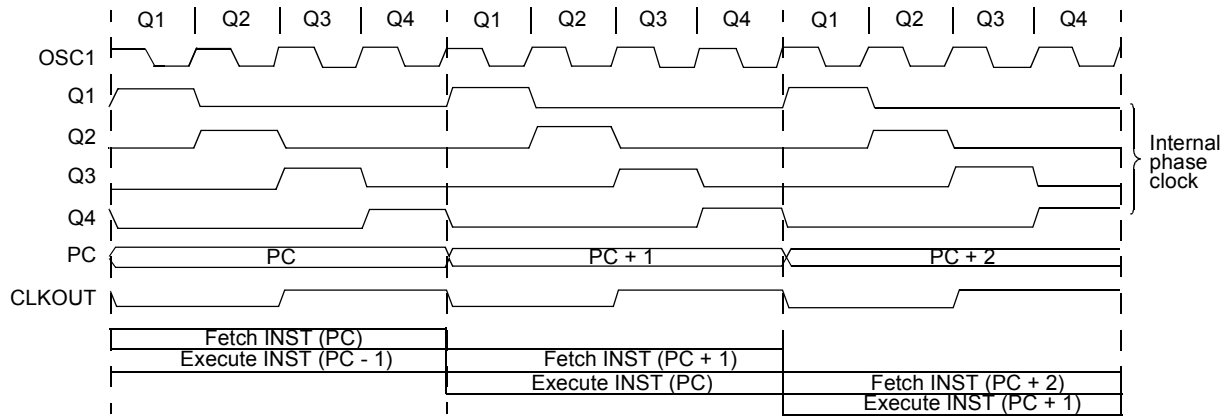

EXAMPLE 3-1: INSTRUCTION PIPELINE FLOW

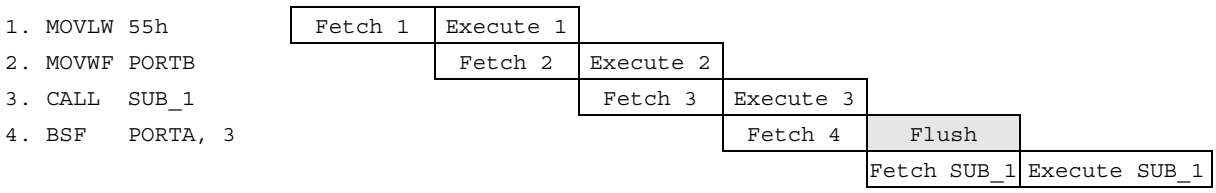

Note: All instructions are single cycle except for any program branches. These take two cycles since the fetch instruction is “flushed” from the pipeline while the new instruction is being fetched and then executed.

NOTES:

© 2009 Microchip Technology Inc.

4.0 MEMORY ORGANIZATION

4.1 Program Memory Organization

The PIC16F627A/628A/648A has a 13-bit program counter capable of addressing an 8K x 14 program memory space. Only the first 1K x 14 (0000h-03FFh) for the PIC16F627A, 2K x 14 (0000h-07FFh) for the PIC16F628A and 4K x 14 (0000h-0FFFh) for the PIC16F648A are physically implemented. Accessing a location above these boundaries will cause a wrap-around within the first 1K x 14 space (PIC16F627A), 2K x 14 space (PIC16F628A) or 4K x 14 space (PIC16F648A). The Reset vector is at 0000h and the interrupt vector is at 0004h (Figure 4-1).

FIGURE 4-1: PROGRAM MEMORY MAP AND STACK

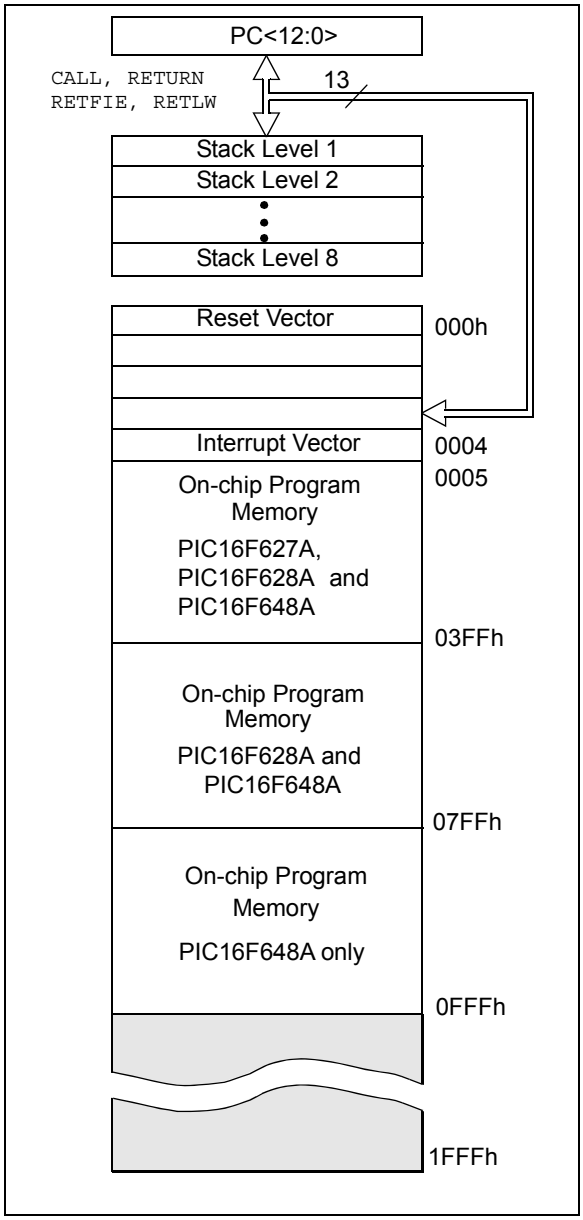

4.2 Data Memory Organization

The data memory (Figure 4-2 and Figure 4-3) is partitioned into four banks, which contain the General Purpose Registers (GPRs) and the Special Function Registers (SFRs). The SFRs are located in the first 32 locations of each bank. There are General Purpose Registers implemented as static RAM in each bank. Table 4-1 lists the General Purpose Register available in each of the four banks.

TABLE 4-1: GENERAL PURPOSE STATIC RAM REGISTERS

	PIC16F627A/628A	PIC16F648A
Bank0	20-7Fh	20-7Fh
Bank1	A0h-FF	A0h-FF
Bank2	120h-14Fh, 170h-17Fh	120h-17Fh
Bank3	1F0h-1FFh	1F0h-1FFh

Addresses F0h-FFh, 170h-17Fh and 1F0h-1FFh are implemented as common RAM and mapped back to addresses 70h-7Fh.

Table 4-2 lists how to access the four banks of registers via the Status register bits RP1 and RP0.

TABLE 4-2: ACCESS TO BANKS OF REGISTERS

Bank	RP1	RP0
0	0	0
1	0	1
2	1	0
3	1	1

4.2.1 GENERAL PURPOSE REGISTER FILE

The register file is organized as 224 x 8 in the PIC16F627A/628A and 256 x 8 in the PIC16F648A. Each is accessed either directly or indirectly through the File Select Register (FSR), See **Section 4.4 “Indirect Addressing, INDF and FSR Registers”**.

FIGURE 4-2: DATA MEMORY MAP OF THE PIC16F627A AND PIC16F628A

Bank 0	File Address	Bank 1	File Address	Bank 2	File Address	Bank 3	File Address
Indirect addr.(1)	00h	Indirect addr.(1)	80h	Indirect addr.(1)	100h	Indirect addr.(1)	180h
TMR0	01h	OPTION	81h	TMR0	101h	OPTION	181h
PCL	02h	PCL	82h	PCL	102h	PCL	182h
STATUS	03h	STATUS	83h	STATUS	103h	STATUS	183h
FSR	04h	FSR	84h	FSR	104h	FSR	184h
PORTA	05h	TRISA	85h		105h		185h
PORTB	06h	TRISB	86h	PORTB	106h	TRISB	186h
	07h		87h		107h		187h
	08h		88h		108h		188h
	09h		89h		109h		189h
PCLATH	0Ah	PCLATH	8Ah	PCLATH	10Ah	PCLATH	18Ah
INTCON	0Bh	INTCON	8Bh	INTCON	10Bh	INTCON	18Bh
PIR1	0Ch	PIE1	8Ch		10Ch		18Ch
	0Dh		8Dh		10Dh		18Dh
TMR1L	0Eh	PCON	8Eh		10Eh		18Eh
TMR1H	0Fh		8Fh		10Fh		18Fh
T1CON	10h		90h				
TMR2	11h		91h				
T2CON	12h	PR2	92h				
	13h		93h				
	14h		94h				
CCPR1L	15h		95h				
CCPR1H	16h		96h				
CCP1CON	17h		97h				
RCSTA	18h	TXSTA	98h				
TXREG	19h	SPBRG	99h				
RCREG	1Ah	EEDATA	9Ah				
	1Bh	EEADR	9Bh				
	1Ch	EECON1	9Ch				
	1Dh	EECON2(1)	9Dh				
	1Eh		9Eh				
CMCON	1Fh	VRCON	9Fh		11Fh		
General Purpose Register 80 Bytes	20h	General Purpose Register 80 Bytes	A0h	General Purpose Register 48 Bytes	120h		
					14Fh		
					150h		
	6Fh		EFh		16Fh		1EFh
16 Bytes	70h	accesses 70h-7Fh	F0h	accesses 70h-7Fh	170h	accesses 70h-7Fh	1F0h
	7Fh		FFh		17Fh		1FFh

Unimplemented data memory locations, read as '0'.

Note 1: Not a physical register.

© 2009 Microchip Technology Inc.

FIGURE 4-3: DATA MEMORY MAP OF THE PIC16F648A

Bank 0		Bank 1		Bank 2		Bank 3	File Address
Indirect addr.(1)	00h	Indirect addr.(1)	80h	Indirect addr.(1)	100h	Indirect addr.(1)	180h
TMR0	01h	OPTION	81h	TMR0	101h	OPTION	181h
PCL	02h	PCL	82h	PCL	102h	PCL	182h
STATUS	03h	STATUS	83h	STATUS	103h	STATUS	183h
FSR	04h	FSR	84h	FSR	104h	FSR	184h
PORTA	05h	TRISA	85h		105h		185h
PORTB	06h	TRISB	86h	PORTB	106h	TRISB	186h
	07h		87h		107h		187h
	08h		88h		108h		188h
	09h		89h		109h		189h
PCLATH	0Ah	PCLATH	8Ah	PCLATH	10Ah	PCLATH	18Ah
INTCON	0Bh	INTCON	8Bh	INTCON	10Bh	INTCON	18Bh
PIR1	0Ch	PIE1	8Ch		10Ch		18Ch
	0Dh		8Dh		10Dh		18Dh
TMR1L	0Eh	PCON	8Eh		10Eh		18Eh
TMR1H	0Fh		8Fh		10Fh		18Fh
T1CON	10h		90h				
TMR2	11h		91h				
T2CON	12h	PR2	92h				
	13h		93h				
	14h		94h				
CCPR1L	15h		95h				
CCPR1H	16h		96h				
CCP1CON	17h		97h				
RCSTA	18h	TXSTA	98h				
TXREG	19h	SPBRG	99h				
RCREG	1Ah	EEDATA	9Ah				
	1Bh	EEADR	9Bh				
	1Ch	EECON1	9Ch				
	1Dh	EECON2(1)	9Dh				
	1Eh		9Eh				
CMCON	1Fh	VRCON	9Fh		11Fh		
General Purpose Register 80 Bytes	20h	General Purpose Register 80 Bytes	A0h	General Purpose Register 80 Bytes	120h		
	6Fh		EFh		16Fh		1EFh
16 Bytes	70h	accesses 70h-7Fh	F0h	accesses 70h-7Fh	170h	accesses 70h-7Fh	1F0h
	7Fh		FFh		17Fh		1FFh

Unimplemented data memory locations, read as '0'.

Note 1: Not a physical register.

4.2.2 SPECIAL FUNCTION REGISTERS

The SFRs are registers used by the CPU and Peripheral functions for controlling the desired operation of the device (Table 4-3). These registers are static RAM.

The special registers can be classified into two sets (core and peripheral). The SFRs associated with the "core" functions are described in this section. Those related to the operation of the peripheral features are described in the section of that peripheral feature.

TABLE 4-3: SPECIAL REGISTERS SUMMARY BANK0

Address	Name	Bit 7	Bit 6	Bit 5	Bit 4	Bit 3	Bit 2	Bit 1	Bit 0	Value on POR Reset(1)	Details on Page
Bank 0											
00h	INDF	Addressing this location uses contents of FSR to address data memory (not a physical register)								xxxx xxxx	30
01h	TMR0	Timer0 Module's Register								xxxx xxxx	47
02h	PCL	Program Counter's (PC) Least Significant Byte								0000 0000	30
03h	STATUS	IRP	RP1	RP0	$\overline{TO}$	$\overline{PD}$	Z	DC	C	0001 1xxx	24
04h	FSR	Indirect Data Memory Address Pointer								xxxx xxxx	30
05h	PORTA	RA7	RA6	RA5	RA4	RA3	RA2	RA1	RA0	xxxx 0000	33
06h	PORTB	RB7	RB6	RB5	RB4	RB3	RB2	RB1	RB0	xxxx xxxx	38
07h	—	Unimplemented								—	—
08h	—	Unimplemented								—	—
09h	—	Unimplemented								—	—
0Ah	PCLATH	—	—	—	Write Buffer for upper 5 bits of Program Counter					---0 0000	30
0Bh	INTCON	GIE	PEIE	T0IE	INTE	RBIE	T0IF	INTF	RBIF	0000 000x	26
0Ch	PIR1	EEIF	CMIF	RCIF	TXIF	—	CCP1IF	TMR2IF	TMR1IF	0000 -000	28
0Dh	—	Unimplemented								—	—
0Eh	TMR1L	Holding Register for the Least Significant Byte of the 16-bit TMR1 Register								xxxx xxxx	50
0Fh	TMR1H	Holding Register for the Most Significant Byte of the 16-bit TMR1 Register								xxxx xxxx	50
10h	T1CON	—	—	T1CKPS1	T1CKPS0	T1OSCEN	$\overline{T1SYNC}$	TMR1CS	TMR1ON	--00 0000	50
11h	TMR2	TMR2 Module's Register								0000 0000	54
12h	T2CON	—	TOUTPS3	TOUTPS2	TOUTPS1	TOUTPS0	TMR2ON	T2CKPS1	T2CKPS0	-000 0000	54
13h	—	Unimplemented								—	—
14h	—	Unimplemented								—	—
15h	CCPR1L	Capture/Compare/PWM Register (LSB)								xxxx xxxx	57
16h	CCPR1H	Capture/Compare/PWM Register (MSB)								xxxx xxxx	57
17h	CCP1CON	—	—	CCP1X	CCP1Y	CCP1M3	CCP1M2	CCP1M1	CCP1M0	--00 0000	57
18h	RCSTA	SPEN	RX9	SREN	CREN	ADEN	FERR	OERR	RX9D	0000 000x	74
19h	TXREG	USART Transmit Data Register								0000 0000	79
1Ah	RCREG	USART Receive Data Register								0000 0000	82
1Bh	—	Unimplemented								—	—
1Ch	—	Unimplemented								—	—
1Dh	—	Unimplemented								—	—
1Eh	—	Unimplemented								—	—
1Fh	CMCON	C2OUT	C1OUT	C2INV	C1INV	CIS	CM2	CM1	CM0	0000 0000	63

Legend: - = Unimplemented locations read as '0', u = unchanged, x = unknown, q = value depends on condition, shaded = unimplemented

Note 1: For the initialization condition for registers tables, refer to Table 14-6 and Table 14-7.

© 2009 Microchip Technology Inc.

TABLE 4-4: SPECIAL FUNCTION REGISTERS SUMMARY BANK1

Address	Name	Bit 7	Bit 6	Bit 5	Bit 4	Bit 3	Bit 2	Bit 1	Bit 0	Value on POR Reset(1)	Details on Page
Bank 1											
80h	INDF	Addressing this location uses contents of FSR to address data memory (not a physical register)								xxxx xxxx	30
81h	OPTION	$\overline{\text{RBPU}}$	INTEDG	T0CS	T0SE	PSA	PS2	PS1	PS0	1111 1111	25
82h	PCL	Program Counter's (PC) Least Significant Byte								0000 0000	30
83h	STATUS	IRP	RP1	RP0	$\overline{\text{TO}}$	$\overline{\text{PD}}$	Z	DC	C	0001 1xxx	24
84h	FSR	Indirect Data Memory Address Pointer								xxxx xxxx	30
85h	TRISA	TRISA7	TRISA6	TRISA5	TRISA4	TRISA3	TRISA2	TRISA1	TRISA0	1111 1111	33
86h	TRISB	TRISB7	TRISB6	TRISB5	TRISB4	TRISB3	TRISB2	TRISB1	TRISB0	1111 1111	38
87h	—	Unimplemented								—	—
88h	—	Unimplemented								—	—
89h	—	Unimplemented								—	—
8Ah	PCLATH	—	—	—	Write Buffer for upper 5 bits of Program Counter					---0 0000	30
8Bh	INTCON	GIE	PEIE	T0IE	INTE	RBIE	T0IF	INTF	RBIF	0000 000x	26
8Ch	PIE1	EEIE	CMIE	RCIE	TXIE	—	CCP1IE	TMR2IE	TMR1IE	0000 -000	27
8Dh	—	Unimplemented								—	—
8Eh	PCON	—	—	—	—	OSCF	—	$\overline{\text{POR}}$	$\overline{\text{BOR}}$	---- 1-0x	29
8Fh	—	Unimplemented								—	—
90h	—	Unimplemented								—	—
91h	—	Unimplemented								—	—
92h	PR2	Timer2 Period Register								1111 1111	54
93h	—	Unimplemented								—	—
94h	—	Unimplemented								—	—
95h	—	Unimplemented								—	—
96h	—	Unimplemented								—	—
97h	—	Unimplemented								—	—
98h	TXSTA	CSRC	TX9	TXEN	SYNC	—	BRGH	TRMT	TX9D	0000 -010	73
99h	SPBRG	Baud Rate Generator Register								0000 0000	75
9Ah	EEDATA	EEPROM Data Register								xxxx xxxx	91
9Bh	EEADR	EEPROM Address Register								xxxx xxxx	92
9Ch	EECON1	—	—	—	—	WRERR	WREN	WR	RD	---- x000	92
9Dh	EECON2	EEPROM Control Register 2 (not a physical register)								---- ----	92
9Eh	—	Unimplemented								—	—
9Fh	VRCON	VREN	VROE	VRR	—	VR3	VR2	VR1	VR0	000- 0000	69

Legend: - = Unimplemented locations read as '0', u = unchanged, x = unknown, q = value depends on condition, shaded = unimplemented

Note 1: For the initialization condition for registers tables, refer to Table 14-6 and Table 14-7.

TABLE 4-5: SPECIAL FUNCTION REGISTERS SUMMARY BANK2

Address	Name	Bit 7	Bit 6	Bit 5	Bit 4	Bit 3	Bit 2	Bit 1	Bit 0	Value on POR Reset(1)	Details on Page
Bank 2											
100h	INDF	Addressing this location uses contents of FSR to address data memory (not a physical register)								xxxx xxxx	30
101h	TMR0	Timer0 Module's Register								xxxx xxxx	47
102h	PCL	Program Counter's (PC) Least Significant Byte								0000 0000	30
103h	STATUS	IRP	RP1	RP0	$\overline{TO}$	$\overline{PD}$	Z	DC	C	0001 1xxx	24
104h	FSR	Indirect Data Memory Address Pointer								xxxx xxxx	30
105h	—	Unimplemented								—	—
106h	PORTB	RB7	RB6	RB5	RB4	RB3	RB2	RB1	RB0	xxxx xxxx	38
107h	—	Unimplemented								—	—
108h	—	Unimplemented								—	—
109h	—	Unimplemented								—	—
10Ah	PCLATH	—	—	—	Write Buffer for upper 5 bits of Program Counter					---0 0000	30
10Bh	INTCON	GIE	PEIE	T0IE	INTE	RBIE	T0IF	INTF	RBIF	0000 000x	26
10Ch	—	Unimplemented								—	—
10Dh	—	Unimplemented								—	—
10Eh	—	Unimplemented								—	—
10Fh	—	Unimplemented								—	—
110h	—	Unimplemented								—	—
111h	—	Unimplemented								—	—
112h	—	Unimplemented								—	—
113h	—	Unimplemented								—	—
114h	—	Unimplemented								—	—
115h	—	Unimplemented								—	—
116h	—	Unimplemented								—	—
117h	—	Unimplemented								—	—
118h	—	Unimplemented								—	—
119h	—	Unimplemented								—	—
11Ah	—	Unimplemented								—	—
11Bh	—	Unimplemented								—	—
11Ch	—	Unimplemented								—	—
11Dh	—	Unimplemented								—	—
11Eh	—	Unimplemented								—	—
11Fh	—	Unimplemented								—	—

Legend: - = Unimplemented locations read as '0', u = unchanged, x = unknown, q = value depends on condition, shaded = unimplemented.

Note 1: For the initialization condition for registers tables, refer to Table 14-6 and Table 14-7.

© 2009 Microchip Technology Inc.

TABLE 4-6: SPECIAL FUNCTION REGISTERS SUMMARY BANK3

Address	Name	Bit 7	Bit 6	Bit 5	Bit 4	Bit 3	Bit 2	Bit 1	Bit 0	Value on POR Reset(1)	Details on Page
Bank 3											
180h	INDF	Addressing this location uses contents of FSR to address data memory (not a physical register)								xxxx xxxx	30
181h	OPTION	$\overline{\text{RBPU}}$	INTEDG	T0CS	T0SE	PSA	PS2	PS1	PS0	1111 1111	25
182h	PCL	Program Counter's (PC) Least Significant Byte								0000 0000	30
183h	STATUS	IRP	RP1	RP0	$\overline{\text{TO}}$	$\overline{\text{PD}}$	Z	DC	C	0001 1xxx	24
184h	FSR	Indirect Data Memory Address Pointer								xxxx xxxx	30
185h	—	Unimplemented								—	—
186h	TRISB	TRISB7	TRISB6	TRISB5	TRISB4	TRISB3	TRISB2	TRISB1	TRISB0	1111 1111	38
187h	—	Unimplemented								—	—
188h	—	Unimplemented								—	—
189h	—	Unimplemented								—	—
18Ah	PCLATH	—	—	—	Write Buffer for upper 5 bits of Program Counter					---0 0000	30
18Bh	INTCON	GIE	PEIE	T0IE	INTE	RBIE	T0IF	INTF	RBIF	0000 000x	26
18Ch	—	Unimplemented								—	—
18Dh	—	Unimplemented								—	—
18Eh	—	Unimplemented								—	—
18Fh	—	Unimplemented								—	—
190h	—	Unimplemented								—	—
191h	—	Unimplemented								—	—
192h	—	Unimplemented								—	—
193h	—	Unimplemented								—	—
194h	—	Unimplemented								—	—
195h	—	Unimplemented								—	—
196h	—	Unimplemented								—	—
197h	—	Unimplemented								—	—
198h	—	Unimplemented								—	—
199h	—	Unimplemented								—	—
19Ah	—	Unimplemented								—	—
19Bh	—	Unimplemented								—	—
19Ch	—	Unimplemented								—	—
19Dh	—	Unimplemented								—	—
19Eh	—	Unimplemented								—	—
19Fh	—	Unimplemented								—	—

Legend: - = Unimplemented locations read as '0', u = unchanged, x = unknown, q = value depends on condition, shaded = unimplemented

Note 1: For the initialization condition for registers tables, refer to Table 14-6 and Table 14-7.

4.2.2.1 Status Register

The Status register, shown in Register 4-1, contains the arithmetic status of the ALU; the Reset status and the bank select bits for data memory (SRAM).

The Status register can be the destination for any instruction, like any other register. If the Status register is the destination for an instruction that affects the Z, DC or C bits, then the write to these three bits is disabled. These bits are set or cleared according to the device logic. Furthermore, the $\overline{TO}$ and $\overline{PD}$ bits are non-writable. Therefore, the result of an instruction with the Status register as destination may be different than intended.

For example, `CLRF STATUS` will clear the upper-three bits and set the Z bit. This leaves the Status register as "`000uu1uu`" (where `u` = unchanged).

It is recommended, therefore, that only `BCF`, `BSF`, `SWAPF` and `MOVWF` instructions are used to alter the Status register because these instructions do not affect any Status bit. For other instructions, not affecting any Status bits, see the "Instruction Set Summary".

> **Note:** The C and DC bits operate as a $\overline{\text{Borrow}}$ and $\overline{\text{Digit Borrow}}$ out bit, respectively, in subtraction. See the `SUBLW` and `SUBWF` instructions for examples.

REGISTER 4-1: STATUS – STATUS REGISTER (ADDRESS: 03h, 83h, 103h, 183h)

R/W-0	R/W-0	R/W-0	R-1	R-1	R/W-x	R/W-x	R/W-x
IRP	RP1	RP0	$\overline{TO}$	$\overline{PD}$	Z	DC	C
bit 7							bit 0

bit 7 **IRP**: Register Bank Select bit (used for indirect addressing)
`1` = Bank 2, 3 (100h-1FFh)
`0` = Bank 0, 1 (00h-FFh)

bit 6-5 **RP<1:0>**: Register Bank Select bits (used for direct addressing)
`00` = Bank 0 (00h-7Fh)
`01` = Bank 1 (80h-FFh)
`10` = Bank 2 (100h-17Fh)
`11` = Bank 3 (180h-1FFh)

bit 4 **$\overline{TO}$**: Time Out bit
`1` = After power-up, `CLRWDT` instruction or `SLEEP` instruction
`0` = A WDT time out occurred

bit 3 **$\overline{PD}$**: Power-down bit
`1` = After power-up or by the `CLRWDT` instruction
`0` = By execution of the `SLEEP` instruction

bit 2 **Z**: Zero bit
`1` = The result of an arithmetic or logic operation is zero
`0` = The result of an arithmetic or logic operation is not zero

bit 1 **DC**: Digit Carry/$\overline{\text{Borrow}}$ bit (`ADDWF`, `ADDLW`, `SUBLW`, `SUBWF` instructions) (for $\overline{\text{Borrow}}$ the polarity is reversed)
`1` = A carry-out from the 4th low order bit of the result occurred
`0` = No carry-out from the 4th low order bit of the result

bit 0 **C**: Carry/$\overline{\text{Borrow}}$ bit (`ADDWF`, `ADDLW`, `SUBLW`, `SUBWF` instructions)
`1` = A carry-out from the Most Significant bit of the result occurred
`0` = No carry-out from the Most Significant bit of the result occurred

> **Note:** For $\overline{\text{Borrow}}$, the polarity is reversed. A subtraction is executed by adding the two's complement of the second operand. For rotate (`RRF`, `RLF`) instructions, this bit is loaded with either the high or low order bit of the source register.

Legend:			
R = Readable bit	W = Writable bit	U = Unimplemented bit, read as '0'	
-n = Value at POR	'1' = Bit is set	'0' = Bit is cleared	x = Bit is unknown

© 2009 Microchip Technology Inc.

4.2.2.2 OPTION Register

The Option register is a readable and writable register, which contains various control bits to configure the TMR0/WDT prescaler, the external RB0/INT interrupt, TMR0 and the weak pull-ups on PORTB.

> **Note:** To achieve a 1:1 prescaler assignment for TMR0, assign the prescaler to the WDT (PSA = 1). See **Section 6.3.1 "Switching Prescaler Assignment"**.

REGISTER 4-2: OPTION_REG – OPTION REGISTER (ADDRESS: 81h, 181h)

R/W-1	R/W-1	R/W-1	R/W-1	R/W-1	R/W-1	R/W-1	R/W-1
$\overline{\text{RBPU}}$	INTEDG	T0CS	T0SE	PSA	PS2	PS1	PS0
bit 7							bit 0

bit 7 **$\overline{\text{RBPU}}$**: PORTB Pull-up Enable bit
1 = PORTB pull-ups are disabled
0 = PORTB pull-ups are enabled by individual port latch values

bit 6 **INTEDG**: Interrupt Edge Select bit
1 = Interrupt on rising edge of RB0/INT pin
0 = Interrupt on falling edge of RB0/INT pin

bit 5 **T0CS**: TMR0 Clock Source Select bit
1 = Transition on RA4/T0CKI/CMP2 pin
0 = Internal instruction cycle clock (CLKOUT)

bit 4 **T0SE**: TMR0 Source Edge Select bit
1 = Increment on high-to-low transition on RA4/T0CKI/CMP2 pin
0 = Increment on low-to-high transition on RA4/T0CKI/CMP2 pin

bit 3 **PSA**: Prescaler Assignment bit
1 = Prescaler is assigned to the WDT
0 = Prescaler is assigned to the Timer0 module

bit 2-0 **PS<2:0>**: Prescaler Rate Select bits

Bit Value	TMR0 Rate	WDT Rate
000	1 : 2	1 : 1
001	1 : 4	1 : 2
010	1 : 8	1 : 4
011	1 : 16	1 : 8
100	1 : 32	1 : 16
101	1 : 64	1 : 32
110	1 : 128	1 : 64
111	1 : 256	1 : 128

Legend:			
R = Readable bit	W = Writable bit	U = Unimplemented bit, read as '0'	
-n = Value at POR	'1' = Bit is set	'0' = Bit is cleared	x = Bit is unknown

4.2.2.3 INTCON Register

The INTCON register is a readable and writable register, which contains the various enable and flag bits for all interrupt sources except the comparator module. See **Section 4.2.2.4 "PIE1 Register"** and **Section 4.2.2.5 "PIR1 Register"** for a description of the comparator enable and flag bits.

> **Note:** Interrupt flag bits get set when an interrupt condition occurs regardless of the state of its corresponding enable bit or the global enable bit, GIE (INTCON<7>).

REGISTER 4-3: INTCON – INTERRUPT CONTROL REGISTER (ADDRESS: 0Bh, 8Bh, 10Bh, 18Bh)

R/W-0	R/W-0	R/W-0	R/W-0	R/W-0	R/W-0	R/W-0	R/W-x
GIE	PEIE	T0IE	INTE	RBIE	T0IF	INTF	RBIF
bit 7							bit 0

bit 7 **GIE:** Global Interrupt Enable bit
1 = Enables all un-masked interrupts
0 = Disables all interrupts

bit 6 **PEIE**: Peripheral Interrupt Enable bit
1 = Enables all un-masked peripheral interrupts
0 = Disables all peripheral interrupts

bit 5 **T0IE**: TMR0 Overflow Interrupt Enable bit
1 = Enables the TMR0 interrupt
0 = Disables the TMR0 interrupt

bit 4 **INTE**: RB0/INT External Interrupt Enable bit
1 = Enables the RB0/INT external interrupt
0 = Disables the RB0/INT external interrupt

bit 3 **RBIE**: RB Port Change Interrupt Enable bit
1 = Enables the RB port change interrupt
0 = Disables the RB port change interrupt

bit 2 **T0IF**: TMR0 Overflow Interrupt Flag bit
1 = TMR0 register has overflowed (must be cleared in software)
0 = TMR0 register did not overflow

bit 1 **INTF**: RB0/INT External Interrupt Flag bit
1 = The RB0/INT external interrupt occurred (must be cleared in software)
0 = The RB0/INT external interrupt did not occur

bit 0 **RBIF**: RB Port Change Interrupt Flag bit
1 = When at least one of the RB<7:4> pins changes state (must be cleared in software)
0 = None of the RB<7:4> pins have changed state

Legend:			
R = Readable bit	W = Writable bit	U = Unimplemented bit, read as '0'	
-n = Value at POR	'1' = Bit is set	'0' = Bit is cleared	x = Bit is unknown

© 2009 Microchip Technology Inc.

4.2.2.4 PIE1 Register

This register contains interrupt enable bits.

REGISTER 4-4: PIE1 – PERIPHERAL INTERRUPT ENABLE REGISTER 1 (ADDRESS: 8Ch)

R/W-0	R/W-0	R/W-0	R/W-0	U-0	R/W-0	R/W-0	R/W-0
EEIE	CMIE	RCIE	TXIE	—	CCP1IE	TMR2IE	TMR1IE
bit 7							bit 0

bit 7 **EEIE:** EE Write Complete Interrupt Enable Bit
1 = Enables the EE write complete interrupt
0 = Disables the EE write complete interrupt

bit 6 **CMIE**: Comparator Interrupt Enable bit
1 = Enables the comparator interrupt
0 = Disables the comparator interrupt

bit 5 **RCIE**: USART Receive Interrupt Enable bit
1 = Enables the USART receive interrupt
0 = Disables the USART receive interrupt

bit 4 **TXIE**: USART Transmit Interrupt Enable bit
1 = Enables the USART transmit interrupt
0 = Disables the USART transmit interrupt

bit 3 **Unimplemented**: Read as ‘0’

bit 2 **CCP1IE**: CCP1 Interrupt Enable bit
1 = Enables the CCP1 interrupt
0 = Disables the CCP1 interrupt

bit 1 **TMR2IE**: TMR2 to PR2 Match Interrupt Enable bit
1 = Enables the TMR2 to PR2 match interrupt
0 = Disables the TMR2 to PR2 match interrupt

bit 0 **TMR1IE**: TMR1 Overflow Interrupt Enable bit
1 = Enables the TMR1 overflow interrupt
0 = Disables the TMR1 overflow interrupt

Legend:			
R = Readable bit	W = Writable bit	U = Unimplemented bit, read as ‘0’	
-n = Value at POR	‘1’ = Bit is set	‘0’ = Bit is cleared	x = Bit is unknown

4.2.2.5 PIR1 Register

This register contains interrupt flag bits.

Note:	Interrupt flag bits get set when an interrupt condition occurs regardless of the state of its corresponding enable bit or the global enable bit, GIE (INTCON<7>). User software should ensure the appropriate interrupt flag bits are clear prior to enabling an interrupt.

REGISTER 4-5: PIR1 – PERIPHERAL INTERRUPT REGISTER 1 (ADDRESS: 0Ch)

R/W-0	R/W-0	R-0	R-0	U-0	R/W-0	R/W-0	R/W-0
EEIF	CMIF	RCIF	TXIF	—	CCP1IF	TMR2IF	TMR1IF
bit 7							bit 0

bit 7 **EEIF:** EEPROM Write Operation Interrupt Flag bit
1 = The write operation completed (must be cleared in software)
0 = The write operation has not completed or has not been started

bit 6 **CMIF**: Comparator Interrupt Flag bit
1 = Comparator output has changed
0 = Comparator output has not changed

bit 5 **RCIF**: USART Receive Interrupt Flag bit
1 = The USART receive buffer is full
0 = The USART receive buffer is empty

bit 4 **TXIF**: USART Transmit Interrupt Flag bit
1 = The USART transmit buffer is empty
0 = The USART transmit buffer is full

bit 3 **Unimplemented**: Read as '0'

bit 2 **CCP1IF**: CCP1 Interrupt Flag bit
Capture Mode
1 = A TMR1 register capture occurred (must be cleared in software)
0 = No TMR1 register capture occurred
Compare Mode
1 = A TMR1 register compare match occurred (must be cleared in software)
0 = No TMR1 register compare match occurred
PWM Mode
Unused in this mode

bit 1 **TMR2IF**: TMR2 to PR2 Match Interrupt Flag bit
1 = TMR2 to PR2 match occurred (must be cleared in software)
0 = No TMR2 to PR2 match occurred

bit 0 **TMR1IF**: TMR1 Overflow Interrupt Flag bit
1 = TMR1 register overflowed (must be cleared in software)
0 = TMR1 register did not overflow

Legend:			
R = Readable bit	W = Writable bit	U = Unimplemented bit, read as '0'	
-n = Value at POR	'1' = Bit is set	'0' = Bit is cleared	x = Bit is unknown

© 2009 Microchip Technology Inc.

4.2.2.6 PCON Register

The PCON register contains flag bits to differentiate between a Power-on Reset, an external $\overline{\text{MCLR}}$ Reset, WDT Reset or a Brown-out Reset.

> **Note:** $\overline{\text{BOR}}$ is unknown on Power-on Reset. It must then be set by the user and checked on subsequent Resets to see if $\overline{\text{BOR}}$ is cleared, indicating a brown-out has occurred. The $\overline{\text{BOR}}$ Status bit is a "don't care" and is not necessarily predictable if the brown-out circuit is disabled (by clearing the BOREN bit in the Configuration Word).

REGISTER 4-6: PCON – POWER CONTROL REGISTER (ADDRESS: 8Eh)

U-0	U-0	U-0	U-0	R/W-1	U-0	R/W-0	R/W-x
—	—	—	—	OSCF	—	$\overline{\text{POR}}$	$\overline{\text{BOR}}$
bit 7							bit 0

bit 7-4 **Unimplemented:** Read as '0'

bit 3 **OSCF**: INTOSC Oscillator Frequency bit
1 = 4 MHz typical
0 = 48 kHz typical

bit 2 **Unimplemented**: Read as '0'

bit 1 **$\overline{\text{POR}}$**: Power-on Reset Status bit
1 = No Power-on Reset occurred
0 = A Power-on Reset occurred (must be set in software after a Power-on Reset occurs)

bit 0 **$\overline{\text{BOR}}$:** Brown-out Reset Status bit
1 = No Brown-out Reset occurred
0 = A Brown-out Reset occurred (must be set in software after a Brown-out Reset occurs)

Legend:			
R = Readable bit	W = Writable bit	U = Unimplemented bit, read as '0'	
-n = Value at POR	'1' = Bit is set	'0' = Bit is cleared	x = Bit is unknown

4.3 PCL and PCLATH

The Program Counter (PC) is 13-bits wide. The low byte comes from the PCL register, which is a readable and writable register. The high byte (PC<12:8>) is not directly readable or writable and comes from PCLATH. On any Reset, the PC is cleared. Figure 4-4 shows the two situations for loading the PC. The upper example in Figure 4-4 shows how the PC is loaded on a write to PCL (PCLATH<4:0> → PCH). The lower example in Figure 4-4 shows how the PC is loaded during a `CALL` or `GOTO` instruction (PCLATH<4:3> → PCH).

FIGURE 4-4: LOADING OF PC IN DIFFERENT SITUATIONS

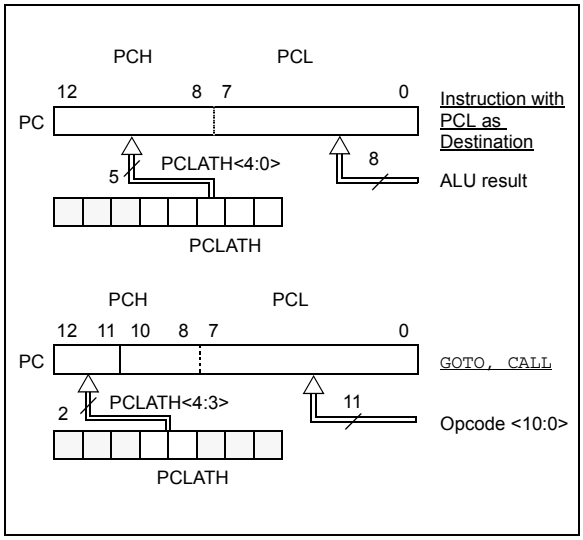

4.3.1 COMPUTED `GOTO`

A computed `GOTO` is accomplished by adding an offset to the program counter (`ADDWF PCL`). When doing a table read using a computed `GOTO` method, care should be exercised if the table location crosses a PCL memory boundary (each 256-byte block). Refer to the Application Note AN556 "*Implementing a Table Read*" (DS00556).

4.3.2 STACK

The PIC16F627A/628A/648A family has an 8-level deep x 13-bit wide hardware stack (Figure 4-1). The stack space is not part of either program or data space and the Stack Pointer is not readable or writable. The PC is PUSHed onto the stack when a `CALL` instruction is executed or an interrupt causes a branch. The stack is POPed in the event of a `RETURN`, `RETLW` or a `RETFIE` instruction execution. PCLATH is not affected by a PUSH or POP operation.

The stack operates as a circular buffer. This means that after the stack has been PUSHed eight times, the ninth PUSH overwrites the value that was stored from the first PUSH. The tenth PUSH overwrites the second PUSH (and so on).

> **Note 1:** There are no Status bits to indicate stack overflow or stack underflow conditions.
>
> **2:** There are no instructions/mnemonics called PUSH or POP. These are actions that occur from the execution of the `CALL`, `RETURN`, `RETLW` and `RETFIE` instructions, or the vectoring to an interrupt address.

4.4 Indirect Addressing, INDF and FSR Registers

The INDF register is not a physical register. Addressing the INDF register will cause indirect addressing.

Indirect addressing is possible by using the INDF register. Any instruction using the INDF register actually accesses data pointed to by the File Select Register (FSR). Reading INDF itself indirectly will produce 00h. Writing to the INDF register indirectly results in a no-operation (although Status bits may be affected). An effective 9-bit address is obtained by concatenating the 8-bit FSR register and the IRP bit (STATUS<7>), as shown in Figure 4-5.

A simple program to clear RAM location 20h-2Fh using indirect addressing is shown in Example 4-1.

EXAMPLE 4-1: INDIRECT ADDRESSING

```
        MOVLW   0x20    ;initialize pointer
        MOVWF   FSR     ;to RAM
NEXT    CLRF    INDF    ;clear INDF register
        INCF    FSR     ;inc pointer
        BTFSS   FSR,4   ;all done?
        GOTO    NEXT    ;no clear next
                        ;yes continue
```


© 2009 Microchip Technology Inc.

FIGURE 4-5: DIRECT/INDIRECT ADDRESSING PIC16F627A/628A/648A

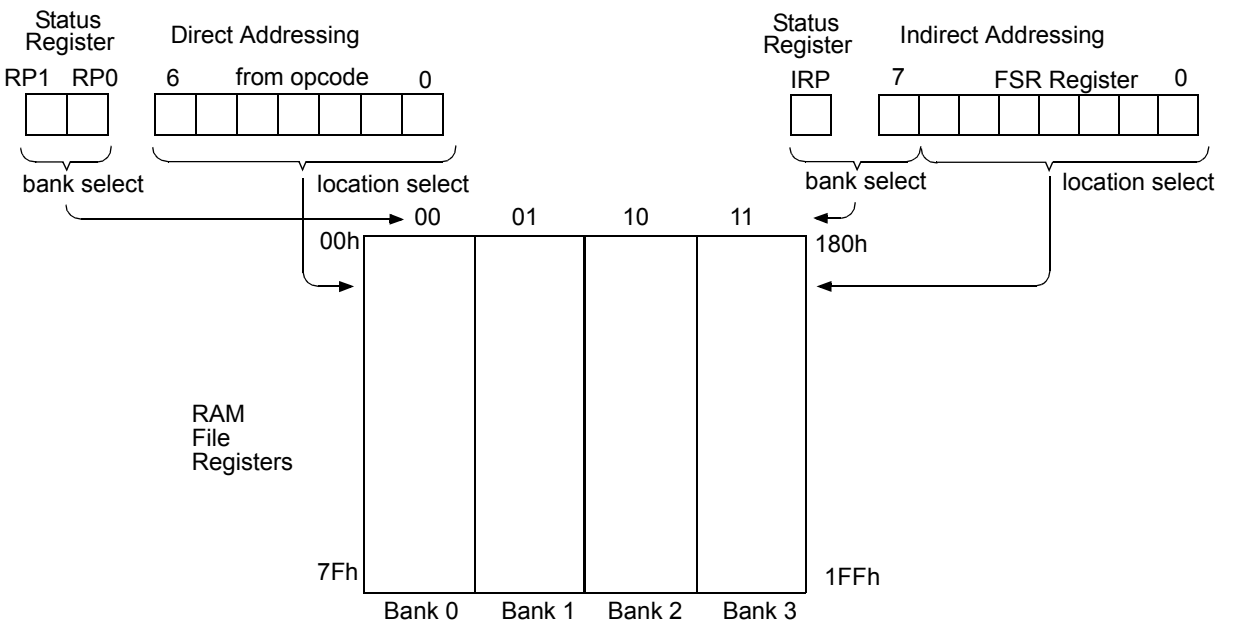

Note: For memory map detail see Figure 4-3, Figure 4-2 and Figure 4-1.

NOTES:

© 2009 Microchip Technology Inc.

5.0 I/O PORTS

The PIC16F627A/628A/648A have two ports, PORTA and PORTB. Some pins for these I/O ports are multiplexed with alternate functions for the peripheral features on the device. In general, when a peripheral is enabled, that pin may not be used as a general purpose I/O pin.

5.1 PORTA and TRISA Registers

PORTA is an 8-bit wide latch. RA4 is a Schmitt Trigger input and an open drain output. Port RA4 is multiplexed with the T0CKI clock input. RA5[(1)] is a Schmitt Trigger input only and has no output drivers. All other RA port pins have Schmitt Trigger input levels and full CMOS output drivers. All pins have data direction bits (TRIS registers) which can configure these pins as input or output.

A '1' in the TRISA register puts the corresponding output driver in a High-impedance mode. A '0' in the TRISA register puts the contents of the output latch on the selected pin(s).

Reading the PORTA register reads the status of the pins whereas writing to it will write to the port latch. All write operations are read-modify-write operations. So a write to a port implies that the port pins are first read, then this value is modified and written to the port data latch.

The PORTA pins are multiplexed with comparator and voltage reference functions. The operation of these pins are selected by control bits in the CMCON (Comparator Control register) register and the VRCON (Voltage Reference Control register) register. When selected as a comparator input, these pins will read as '0's.

> **Note 1:** RA5 shares function with VPP. When VPP voltage levels are applied to RA5, the device will enter Programming mode.
>
> **2:** On Reset, the TRISA register is set to all inputs. The digital inputs (RA<3:0>) are disabled and the comparator inputs are forced to ground to reduce current consumption.
>
> **3:** TRISA<6:7> is overridden by oscillator configuration. When PORTA<6:7> is overridden, the data reads '0' and the TRISA<6:7> bits are ignored.

TRISA controls the direction of the RA pins, even when they are being used as comparator inputs. The user must make sure to keep the pins configured as inputs when using them as comparator inputs.

The RA2 pin will also function as the output for the voltage reference. When in this mode, the VREF pin is a very high-impedance output. The user must configure TRISA<2> bit as an input and use high-impedance loads.

In one of the comparator modes defined by the CMCON register, pins RA3 and RA4 become outputs of the comparators. The TRISA<4:3> bits must be cleared to enable outputs to use this function.

EXAMPLE 5-1: INITIALIZING PORTA

```
CLRF    PORTA       ;Initialize PORTA by
                    ;setting
                    ;output data latches
MOVLW   0x07        ;Turn comparators off and
MOVWF   CMCON       ;enable pins for I/O
                    ;functions
BCF     STATUS, RP1
BSF     STATUS, RP0 ;Select Bank1
MOVLW   0x1F        ;Value used to initialize
                    ;data direction
MOVWF   TRISA       ;Set RA<4:0> as inputs
                    ;TRISA<5> always
                    ;read as '1'.
                    ;TRISA<7:6>
                    ;depend on oscillator
                    ;mode
```

FIGURE 5-1: BLOCK DIAGRAM OF RA0/AN0:RA1/AN1 PINS

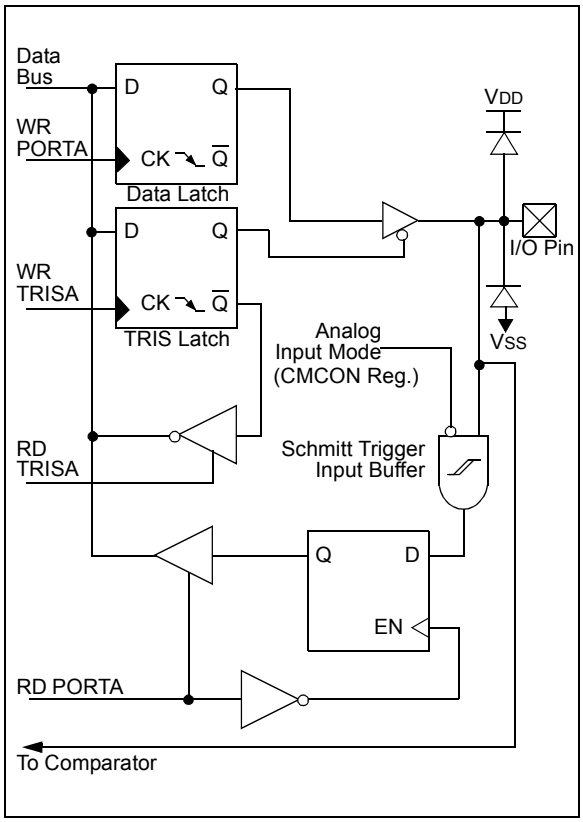

FIGURE 5-2: BLOCK DIAGRAM OF RA2/AN2/VREF PIN

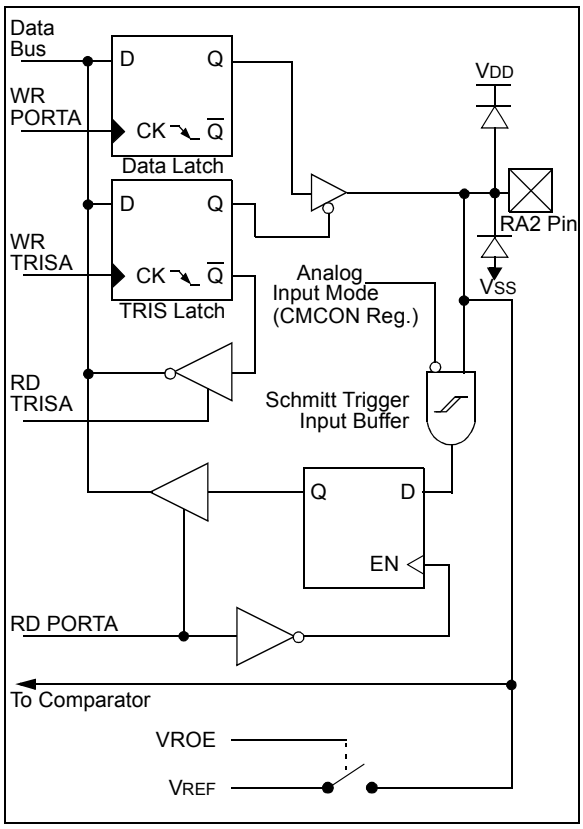

FIGURE 5-3: BLOCK DIAGRAM OF THE RA3/AN3/CMP1 PIN

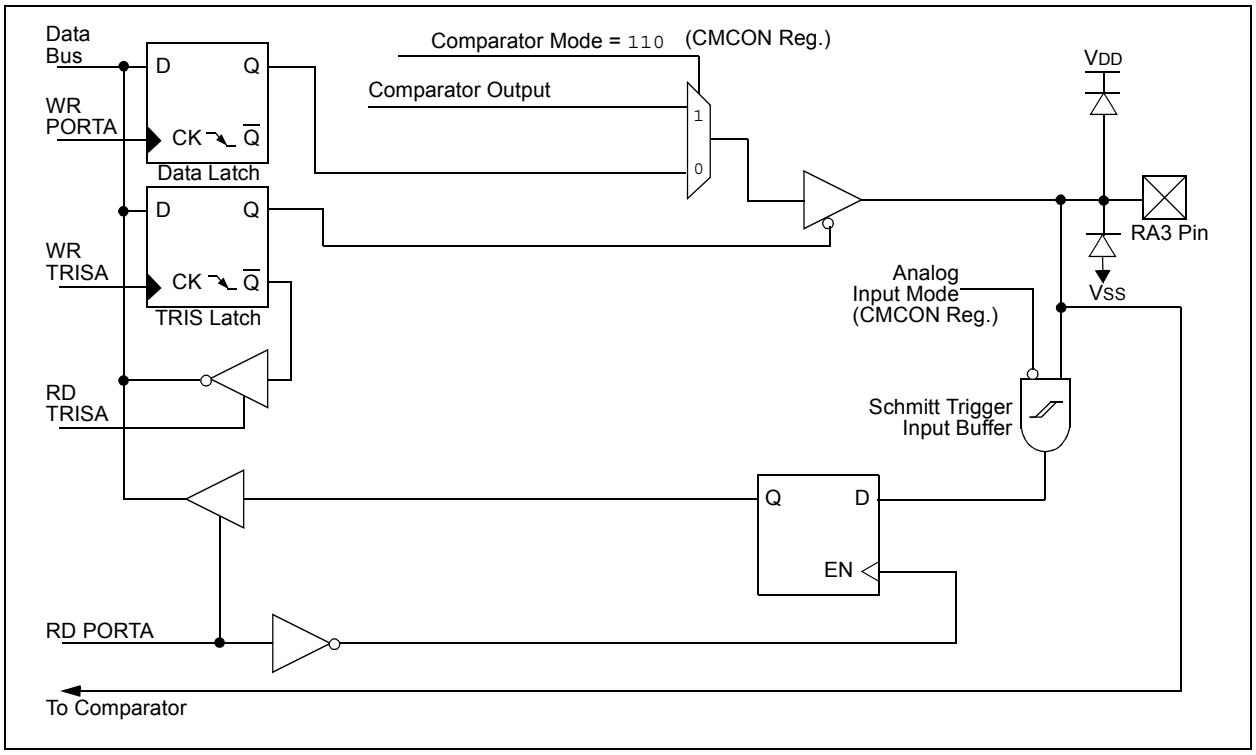

© 2009 Microchip Technology Inc.

FIGURE 5-4: BLOCK DIAGRAM OF RA4/T0CKI/CMP2 PIN

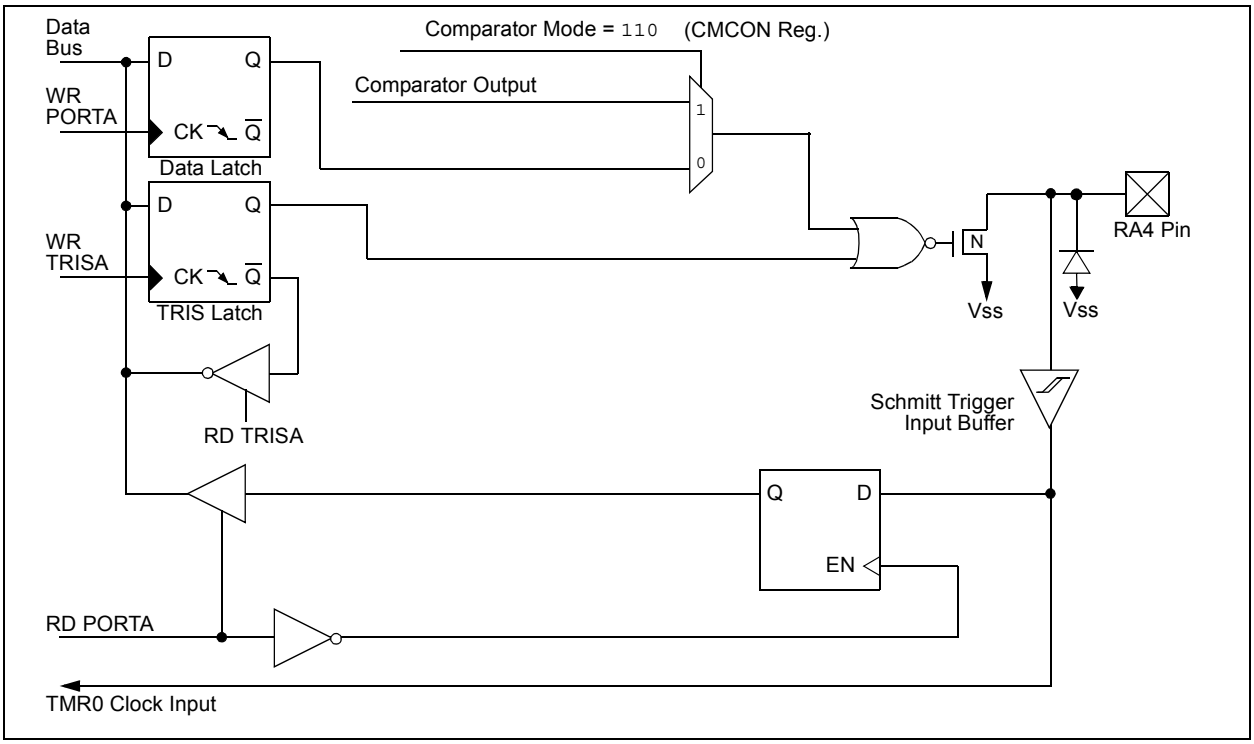

FIGURE 5-5: BLOCK DIAGRAM OF THE RA5/MCLR/VPP PIN

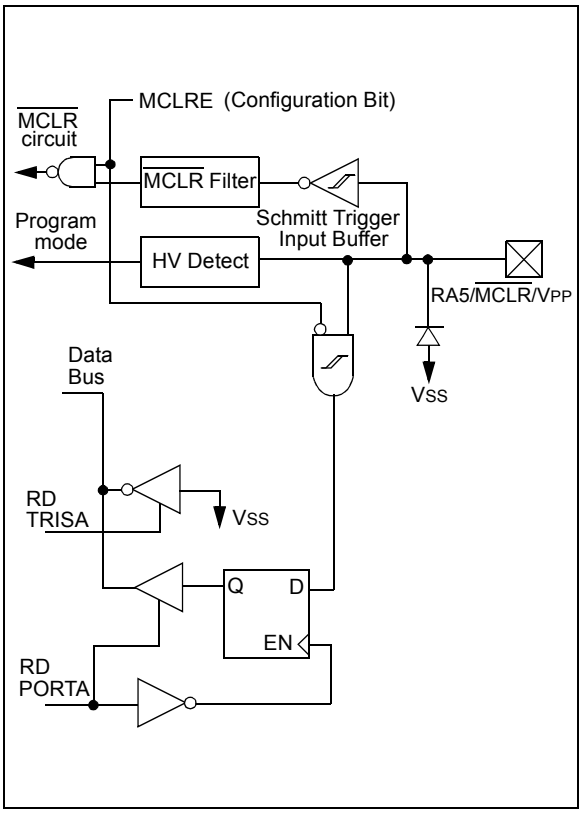

FIGURE 5-6: BLOCK DIAGRAM OF RA6/OSC2/CLKOUT PIN

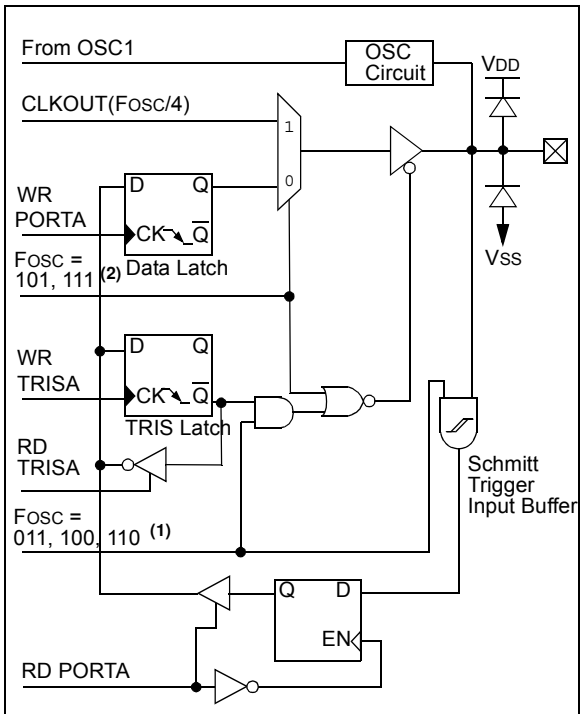

Note 1: INTOSC with RA6 = I/O or RC with RA6 = I/O.
2: INTOSC with RA6 = CLKOUT or RC with RA6 = CLKOUT.

FIGURE 5-7: BLOCK DIAGRAM OF RA7/OSC1/CLKIN PIN

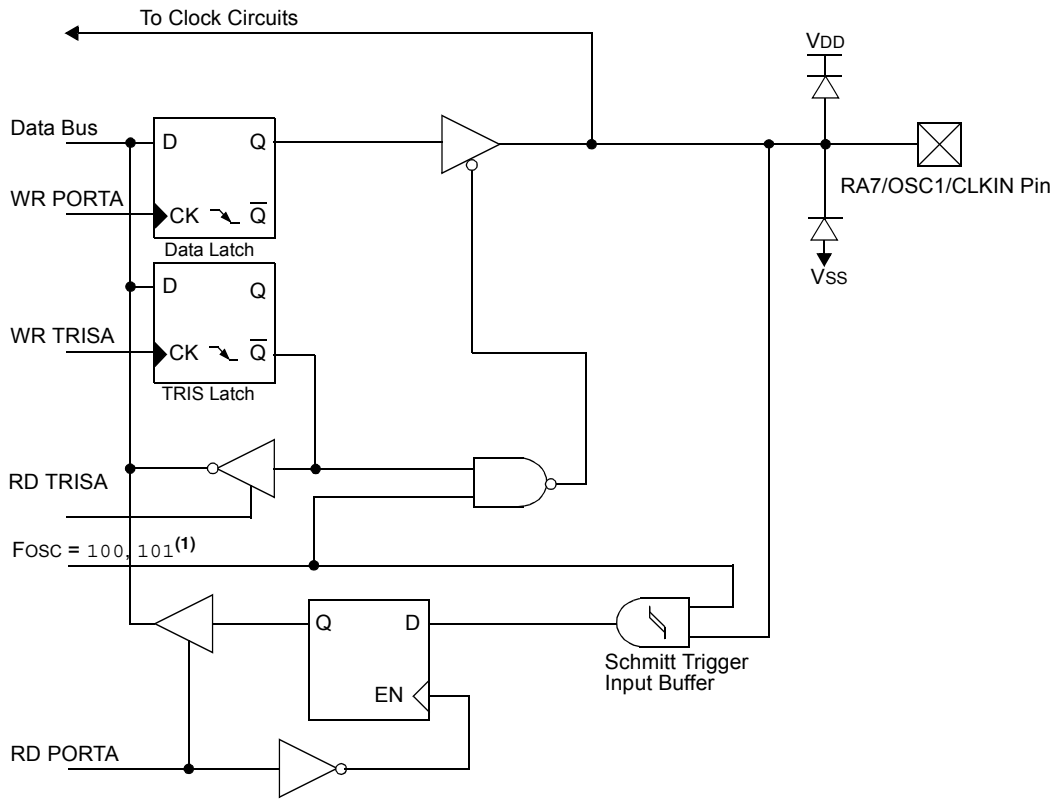

Note 1: INTOSC with CLKOUT and INTOSC with I/O.

© 2009 Microchip Technology Inc.

TABLE 5-1: PORTA FUNCTIONS

Name	Function	Input Type	Output Type	Description
RA0/AN0	RA0	ST	CMOS	Bidirectional I/O port
	AN0	AN	—	Analog comparator input
RA1/AN1	RA1	ST	CMOS	Bidirectional I/O port
	AN1	AN	—	Analog comparator input
RA2/AN2/VREF	RA2	ST	CMOS	Bidirectional I/O port
	AN2	AN	—	Analog comparator input
	VREF	—	AN	VREF output
RA3/AN3/CMP1	RA3	ST	CMOS	Bidirectional I/O port
	AN3	AN	—	Analog comparator input
	CMP1	—	CMOS	Comparator 1 output
RA4/T0CKI/CMP2	RA4	ST	OD	Bidirectional I/O port. Output is open drain type.
	T0CKI	ST	—	External clock input for TMR0 or comparator output
	CMP2	—	OD	Comparator 2 output
RA5/$\overline{\text{MCLR}}$/VPP	RA5	ST	—	Input port
	$\overline{\text{MCLR}}$	ST	—	Master clear. When configured as $\overline{\text{MCLR}}$, this pin is an active low Reset to the device. Voltage on $\overline{\text{MCLR}}$/VPP must not exceed VDD during normal device operation.
	VPP	HV	—	Programming voltage input
RA6/OSC2/CLKOUT	RA6	ST	CMOS	Bidirectional I/O port
	OSC2	—	XTAL	Oscillator crystal output. Connects to crystal resonator in Crystal Oscillator mode.
	CLKOUT	—	CMOS	In RC or INTOSC mode. OSC2 pin can output CLKOUT, which has 1/4 the frequency of OSC1.
RA7/OSC1/CLKIN	RA7	ST	CMOS	Bidirectional I/O port
	OSC1	XTAL	—	Oscillator crystal input. Connects to crystal resonator in Crystal Oscillator mode.
	CLKIN	ST	—	External clock source input. RC biasing pin.

Legend: O = Output; — = Not used; TTL = TTL Input; CMOS = CMOS Output; I = Input; OD = Open Drain Output; P = Power; ST = Schmitt Trigger Input; AN = Analog

TABLE 5-2: SUMMARY OF REGISTERS ASSOCIATED WITH PORTA

Address	Name	Bit 7	Bit 6	Bit 5	Bit 4	Bit 3	Bit 2	Bit 1	Bit 0	Value on POR	Value on All Other Resets
05h	PORTA	RA7	RA6	RA5(1)	RA4	RA3	RA2	RA1	RA0	xxxx 0000	qqqu 0000
85h	TRISA	TRISA7	TRISA6	TRISA5	TRISA4	TRISA3	TRISA2	TRISA1	TRISA0	1111 1111	1111 1111
1Fh	CMCON	C2OUT	C1OUT	C2INV	C1INV	CIS	CM2	CM1	CM0	0000 0000	0000 0000
9Fh	VRCON	VREN	VROE	VRR	—	VR3	VR2	VR1	VR0	000- 0000	000- 0000

Legend: - = Unimplemented locations read as '0', u = unchanged, x = unknown, q = value depends on condition. Shaded cells are not used for PORTA.

Note 1: MCLRE configuration bit sets RA5 functionality.

5.2 PORTB and TRISB Registers

PORTB is an 8-bit wide bidirectional port. The corresponding data direction register is TRISB. A '1' in the TRISB register puts the corresponding output driver in a High-impedance mode. A '0' in the TRISB register puts the contents of the output latch on the selected pin(s).

PORTB is multiplexed with the external interrupt, USART, CCP module and the TMR1 clock input/output. The standard port functions and the alternate port functions are shown in Table 5-3. Alternate port functions may override the TRIS setting when enabled.

Reading PORTB register reads the status of the pins, whereas writing to it will write to the port latch. All write operations are read-modify-write operations. So a write to a port implies that the port pins are first read, then this value is modified and written to the port data latch.

Each of the PORTB pins has a weak internal pull-up (≈200 μA typical). A single control bit can turn on all the pull-ups. This is done by clearing the $\overline{\text{RBPU}}$ (OPTION<7>) bit. The weak pull-up is automatically turned off when the port pin is configured as an output. The pull-ups are disabled on Power-on Reset.

Four of PORTB's pins, RB<7:4>, have an interrupt-on-change feature. Only pins configured as inputs can cause this interrupt to occur (i.e., any RB<7:4> pin configured as an output is excluded from the interrupt-on-change comparison). The input pins (of RB<7:4>) are compared with the old value latched on the last read of PORTB. The "mismatch" outputs of RB<7:4> are OR'ed together to generate the RBIF interrupt (flag latched in INTCON<0>).

This interrupt can wake the device from Sleep. The user, in the interrupt service routine, can clear the interrupt in the following manner:

a) Any read or write of PORTB. This will end the mismatch condition.
b) Clear flag bit RBIF.

A mismatch condition will continue to set flag bit RBIF. Reading PORTB will end the mismatch condition and allow flag bit RBIF to be cleared.

This interrupt on mismatch feature, together with software configurable pull-ups on these four pins allow easy interface to a key pad and make it possible for wake-up on key-depression (See Application Note AN552 "*Implementing Wake-up on Key Strokes*" (DS00552).

Note:	If a change on the I/O pin should occur when a read operation is being executed (start of the Q2 cycle), then the RBIF interrupt flag may not get set.

The interrupt-on-change feature is recommended for wake-up on key depression operation and operations where PORTB is only used for the interrupt-on-change feature. Polling of PORTB is not recommended while using the interrupt-on-change feature.

FIGURE 5-8: BLOCK DIAGRAM OF RB0/INT PIN

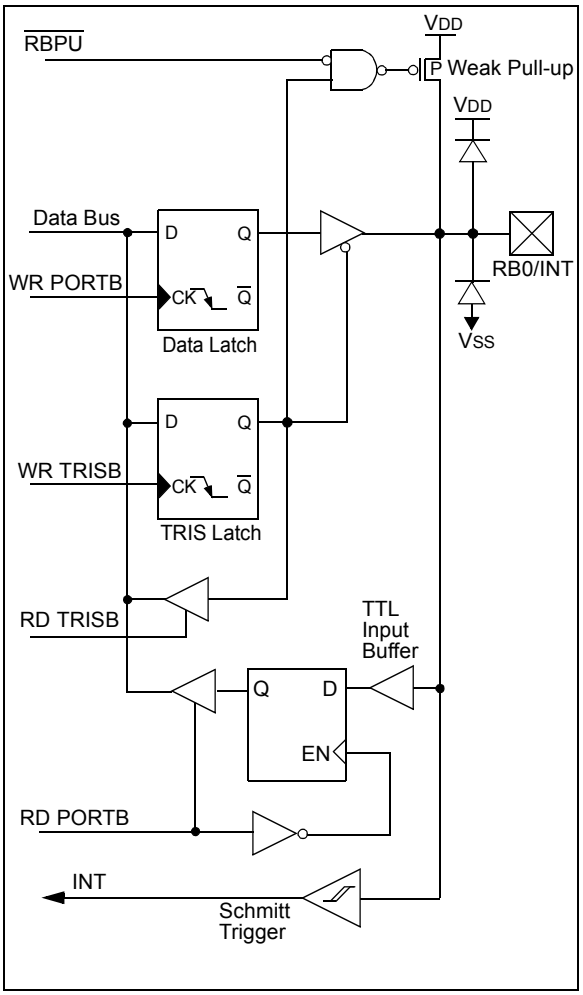

© 2009 Microchip Technology Inc.

FIGURE 5-9: BLOCK DIAGRAM OF RB1/RX/DT PIN

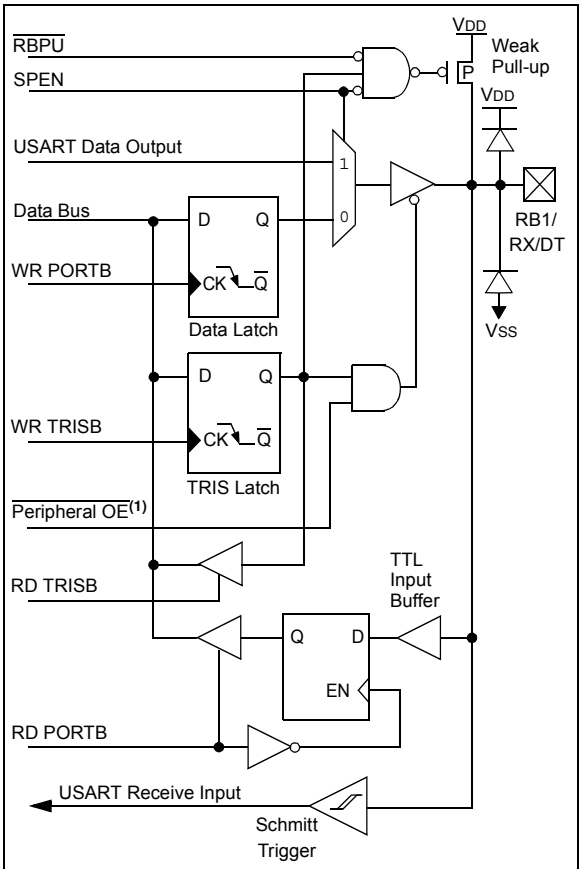

Note 1: Peripheral OE (output enable) is only active if peripheral select is active.

FIGURE 5-10: BLOCK DIAGRAM OF RB2/TX/CK PIN

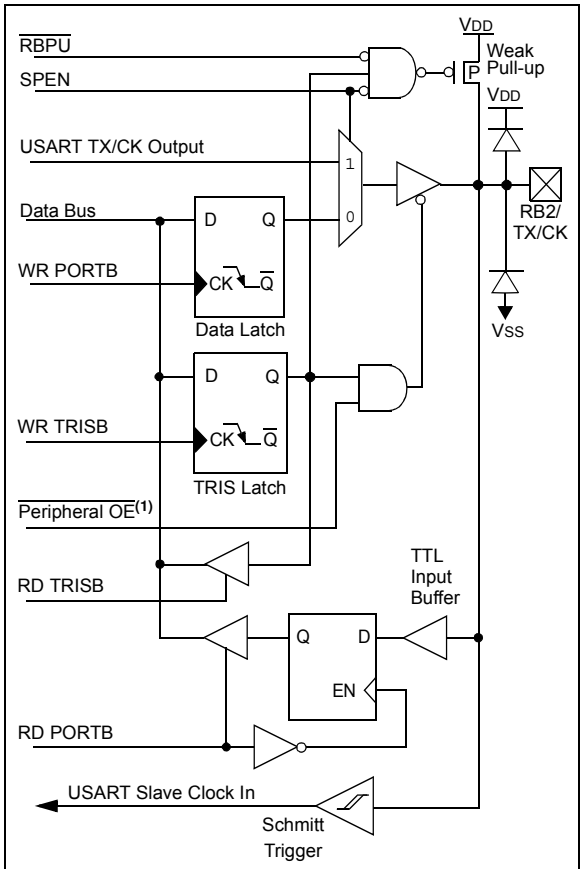

Note 1: Peripheral OE (output enable) is only active if peripheral select is active.

FIGURE 5-11: BLOCK DIAGRAM OF RB3/CCP1 PIN

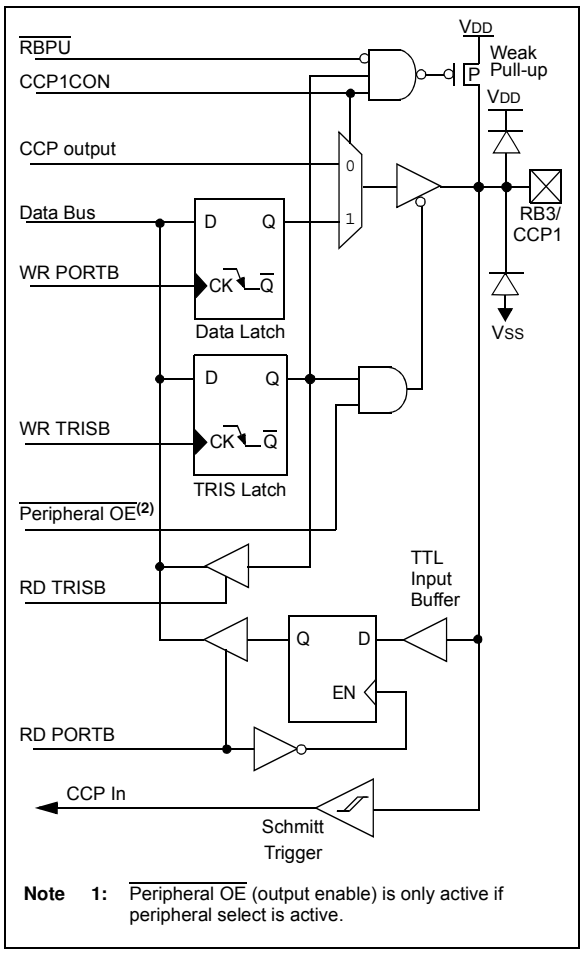

Note 1: Peripheral OE (output enable) is only active if peripheral select is active.

© 2009 Microchip Technology Inc.

FIGURE 5-12: BLOCK DIAGRAM OF RB4/PGM PIN

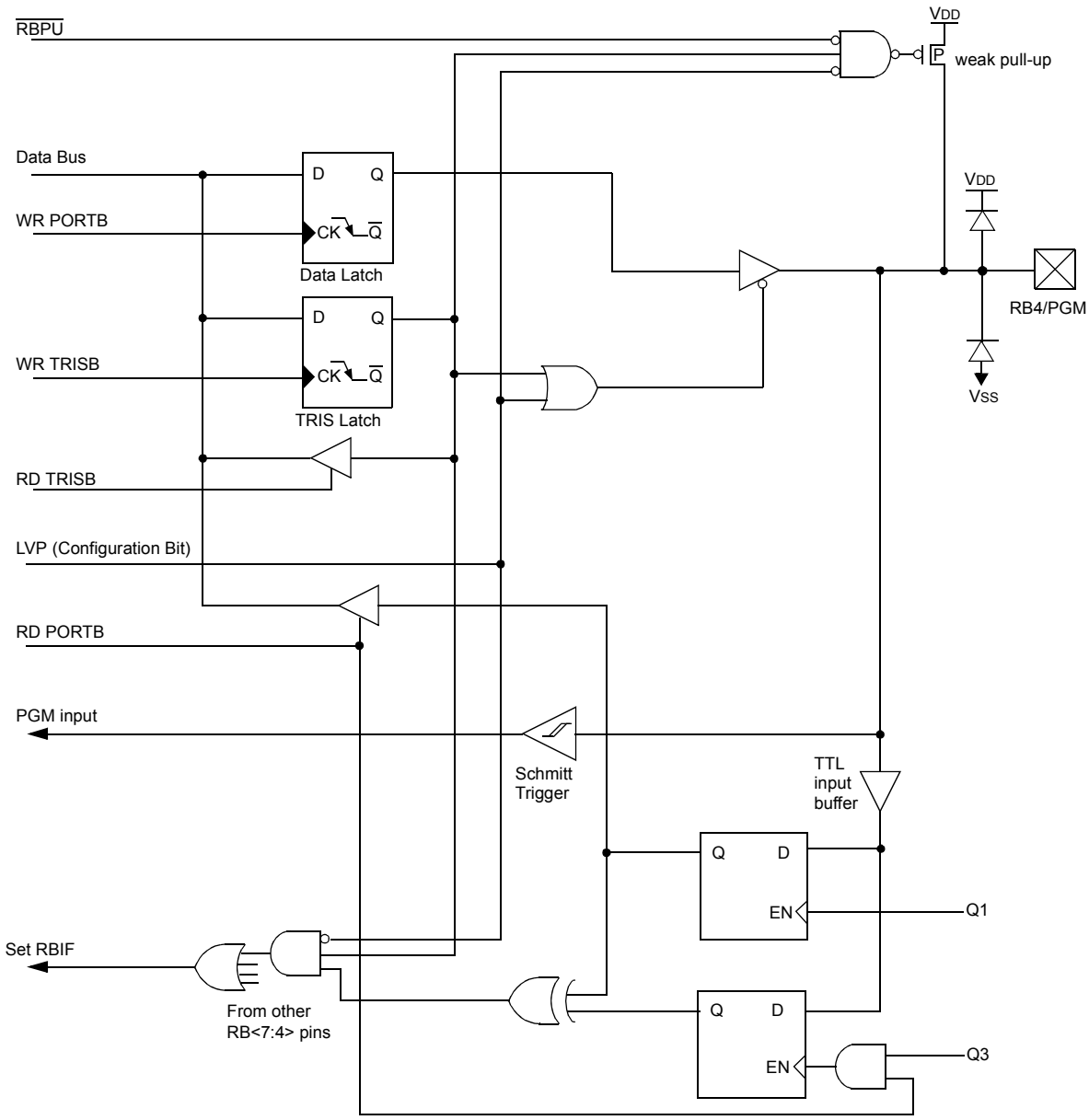

Note: The low-voltage programming disables the interrupt-on-change and the weak pull-ups on RB4.

FIGURE 5-13: BLOCK DIAGRAM OF RB5 PIN

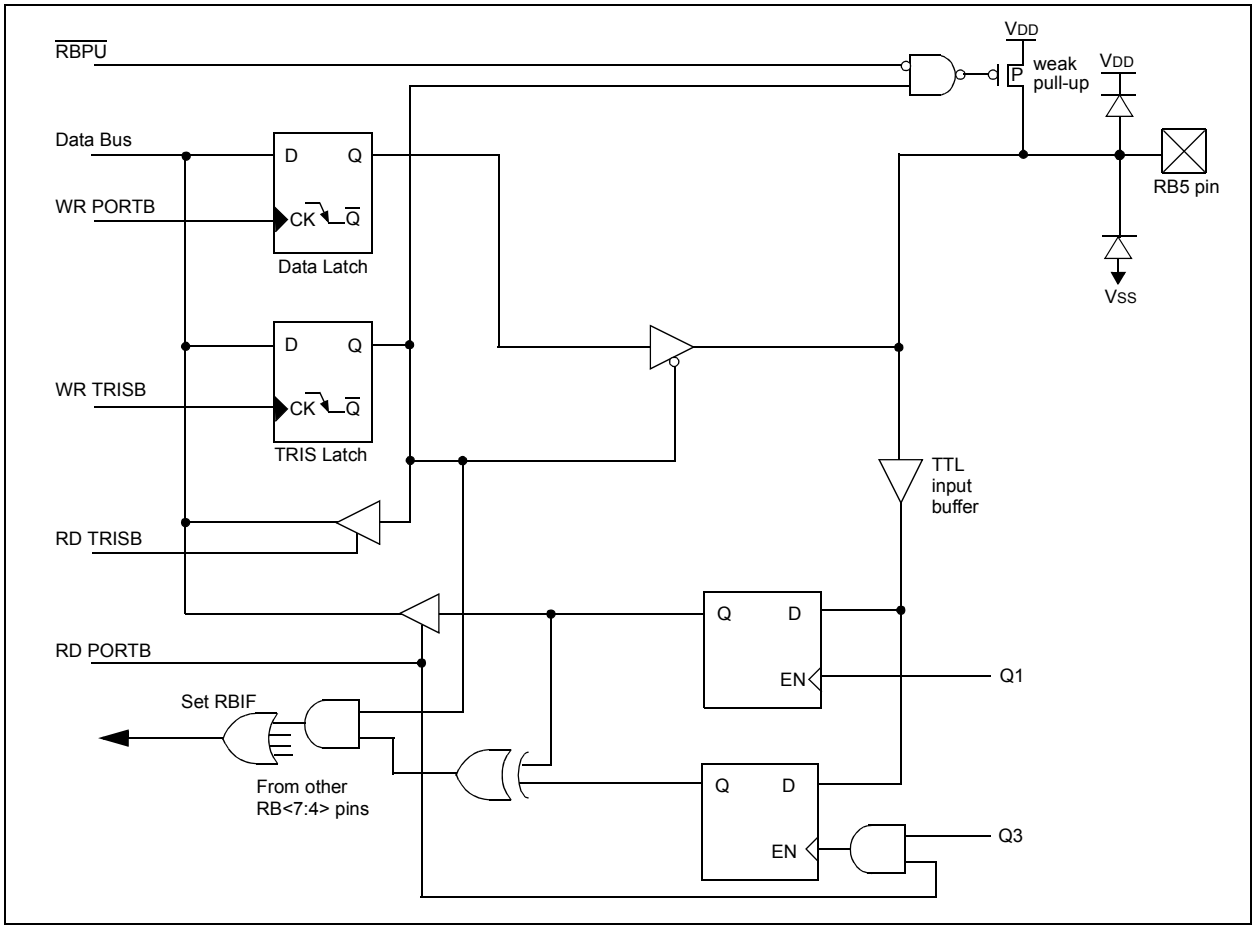

© 2009 Microchip Technology Inc.

FIGURE 5-14: BLOCK DIAGRAM OF RB6/T1OSO/T1CKI/PGC PIN

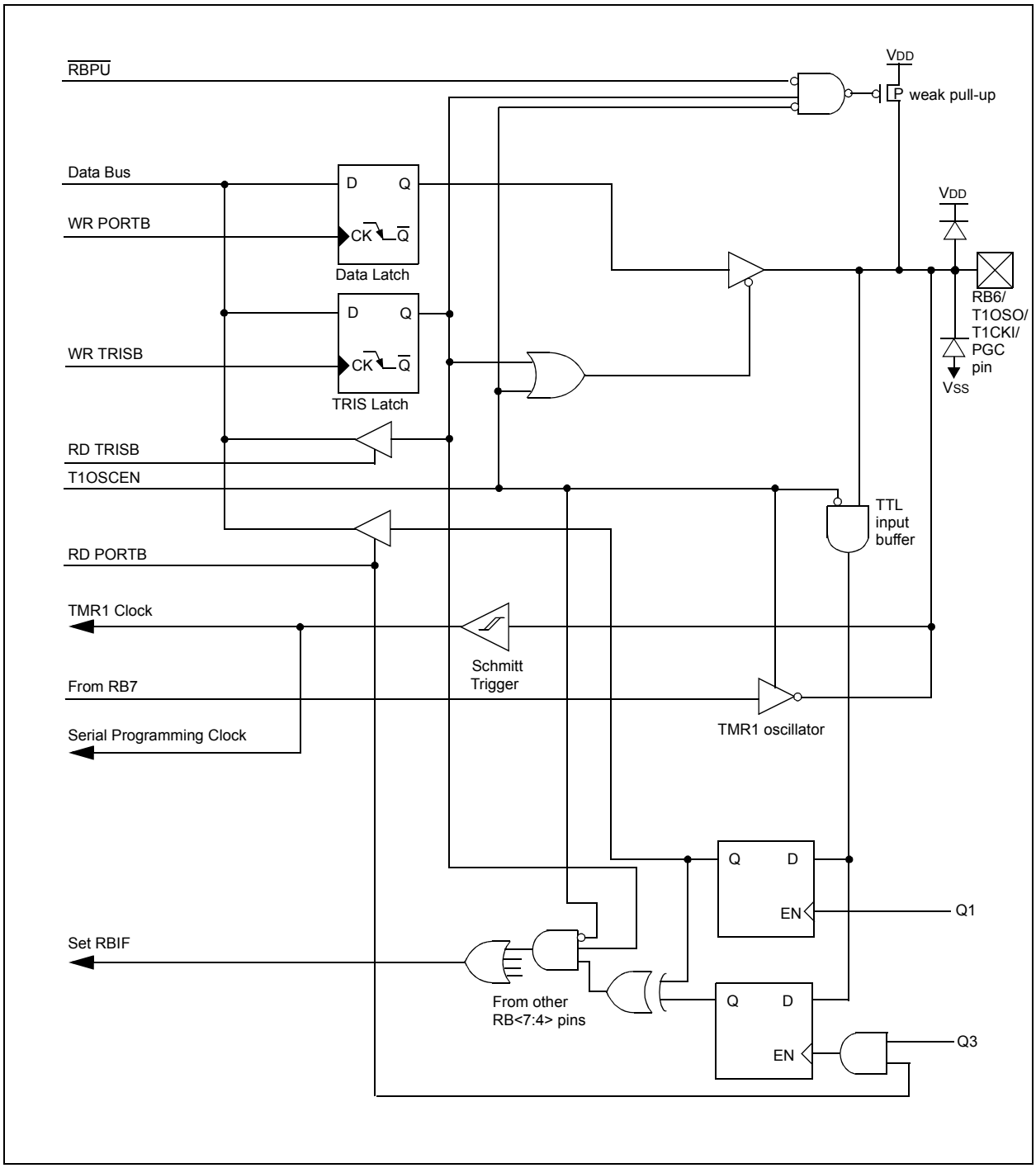

FIGURE 5-15: BLOCK DIAGRAM OF THE RB7/T1OSI/PGD PIN

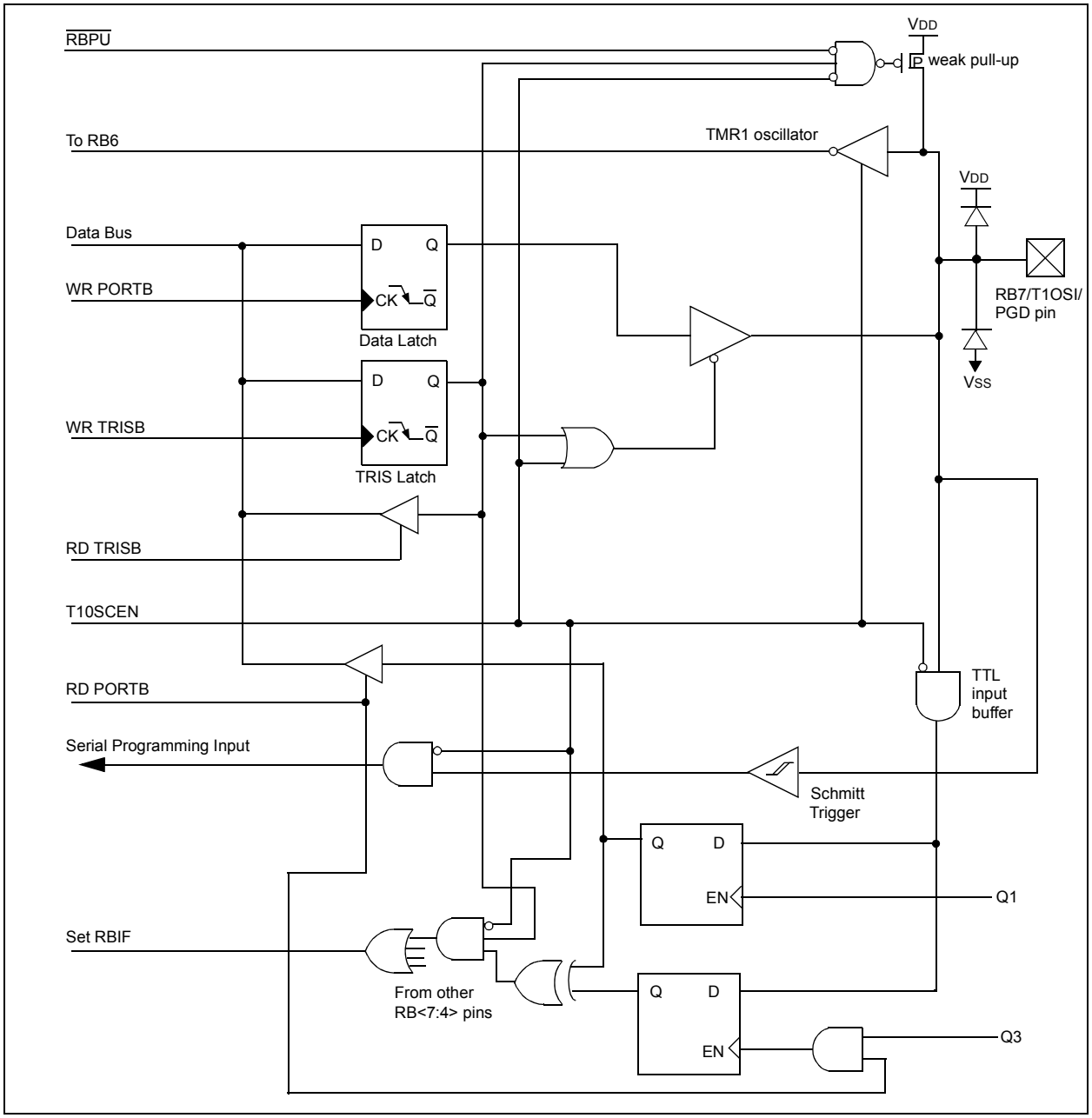

© 2009 Microchip Technology Inc.

TABLE 5-3: PORTB FUNCTIONS

Name	Function	Input Type	Output Type	Description
RB0/INT	RB0	TTL	CMOS	Bidirectional I/O port. Can be software programmed for internal weak pull-up.
	INT	ST	—	External interrupt
RB1/RX/DT	RB1	TTL	CMOS	Bidirectional I/O port. Can be software programmed for internal weak pull-up.
	RX	ST	—	USART Receive Pin
	DT	ST	CMOS	Synchronous data I/O
RB2/TX/CK	RB2	TTL	CMOS	Bidirectional I/O port
	TX	—	CMOS	USART Transmit Pin
	CK	ST	CMOS	Synchronous Clock I/O. Can be software programmed for internal weak pull-up.
RB3/CCP1	RB3	TTL	CMOS	Bidirectional I/O port. Can be software programmed for internal weak pull-up.
	CCP1	ST	CMOS	Capture/Compare/PWM/I/O
RB4/PGM	RB4	TTL	CMOS	Bidirectional I/O port. Interrupt-on-pin change. Can be software programmed for internal weak pull-up.
	PGM	ST	—	Low-voltage programming input pin. When low-voltage programming is enabled, the interrupt-on-pin change and weak pull-up resistor are disabled.
RB5	RB5	TTL	CMOS	Bidirectional I/O port. Interrupt-on-pin change. Can be software programmed for internal weak pull-up.
RB6/T1OSO/T1CKI/PGC	RB6	TTL	CMOS	Bidirectional I/O port. Interrupt-on-pin change. Can be software programmed for internal weak pull-up.
	T1OSO	—	XTAL	Timer1 Oscillator Output
	T1CKI	ST	—	Timer1 Clock Input
	PGC	ST	—	ICSP™ Programming Clock
RB7/T1OSI/PGD	RB7	TTL	CMOS	Bidirectional I/O port. Interrupt-on-pin change. Can be software programmed for internal weak pull-up.
	T1OSI	XTAL	—	Timer1 Oscillator Input
	PGD	ST	CMOS	ICSP Data I/O

Legend: O = Output; CMOS = CMOS Output; P = Power; — = Not used; I = Input; ST = Schmitt Trigger Input; TTL = TTL Input; OD = Open Drain Output; AN = Analog

TABLE 5-4: SUMMARY OF REGISTERS ASSOCIATED WITH PORTB

Address	Name	Bit 7	Bit 6	Bit 5	Bit 4	Bit 3	Bit 2	Bit 1	Bit 0	Value on POR	Value on All Other Resets
06h, 106h	PORTB	RB7	RB6	RB5	RB4(1)	RB3	RB2	RB1	RB0	xxxx xxxx	uuuu uuuu
86h, 186h	TRISB	TRISB7	TRISB6	TRISB5	TRISB4	TRISB3	TRISB2	TRISB1	TRISB0	1111 1111	1111 1111
81h, 181h	OPTION	$\overline{\text{RBPU}}$	INTEDG	T0CS	T0SE	PSA	PS2	PS1	PS0	1111 1111	1111 1111

Legend: u = unchanged, x = unknown. Shaded cells are not used for PORTB.

Note 1: LVP configuration bit sets RB4 functionality.

5.3 I/O Programming Considerations

5.3.1 BIDIRECTIONAL I/O PORTS

Any instruction that writes operates internally as a read followed by a write operation. The BCF and BSF instructions, for example, read the register into the CPU, execute the bit operation and write the result back to the register. Caution must be used when these instructions are applied to a port with both inputs and outputs defined. For example, a BSF operation on bit 5 of PORTB will cause all eight bits of PORTB to be read into the CPU. Then the BSF operation takes place on bit 5 and PORTB is written to the output latches. If another bit of PORTB is used as a bidirectional I/O pin (e.g., bit 0) and is defined as an input at this time, the input signal present on the pin itself would be read into the CPU and rewritten to the data latch of this particular pin, overwriting the previous content. As long as the pin stays in the Input mode, no problem occurs. However, if bit 0 is switched into Output mode later on, the content of the data latch may now be unknown.

Reading a port register reads the values of the port pins. Writing to the port register writes the value to the port latch. When using read-modify-write instructions (ex. BCF, BSF, etc.) on a port, the value of the port pins is read, the desired operation is done to this value, and this value is then written to the port latch.

Example 5-2 shows the effect of two sequential read-modify-write instructions (ex., BCF, BSF, etc.) on an I/O port.

A pin actively outputting a Low or High should not be driven from external devices at the same time in order to change the level on this pin ("wired-OR", "wired-AND"). The resulting high output currents may damage the chip.

EXAMPLE 5-2: READ-MODIFY-WRITE INSTRUCTIONS ON AN I/O PORT

```
;Initial PORT settings:PORTB<7:4> Inputs
;                      PORTB<3:0> Outputs
;PORTB<7:6> have external pull-up and are
;not connected to other circuitry
;
;                      PORT latchPORT Pins
                       ---------- ----------
    BCF STATUS, RP0    ;
    BCF PORTB, 7       ;01pp pppp 11pp pppp
    BSF STATUS, RP0    ;
    BCF TRISB, 7       ;10pp pppp 11pp pppp
    BCF TRISB, 6       ;10pp pppp 10pp pppp
;
;Note that the user may have expected the
;pin values to be 00pp pppp. The 2nd BCF
;caused RB7 to be latched as the pin value
;(High).
```

5.3.2 SUCCESSIVE OPERATIONS ON I/O PORTS

The actual write to an I/O port happens at the end of an instruction cycle, whereas for reading, the data must be valid at the beginning of the instruction cycle (Figure 5-16). Therefore, care must be exercised if a write followed by a read operation is carried out on the same I/O port. The sequence of instructions should be such to allow the pin voltage to stabilize (load dependent) before the next instruction, which causes that file to be read into the CPU, is executed. Otherwise, the previous state of that pin may be read into the CPU rather than the new state. When in doubt, it is better to separate these instructions with a NOP or another instruction not accessing this I/O port.

FIGURE 5-16: SUCCESSIVE I/O OPERATION

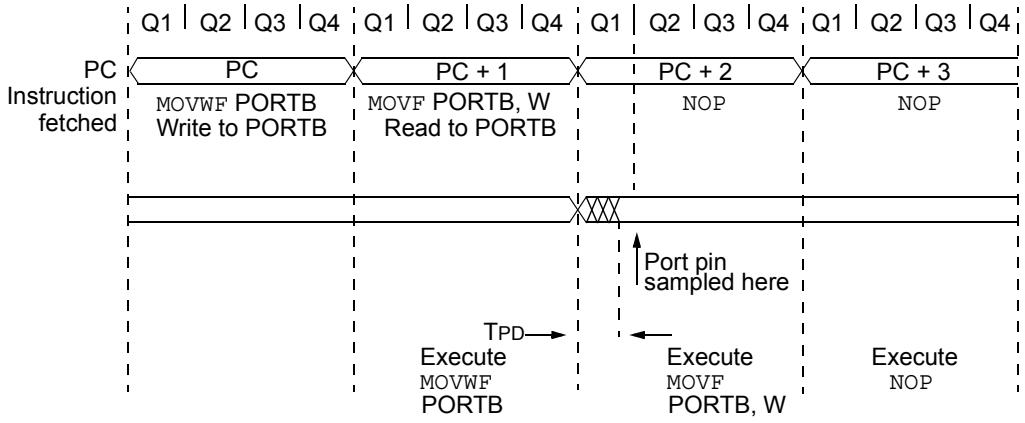

Note 1: This example shows write to PORTB followed by a read from PORTB.

2: Data setup time = (0.25 TCY - TPD) where TCY = instruction cycle and TPD = propagation delay of Q1 cycle to output valid. Therefore, at higher clock frequencies, a write followed by a read may be problematic.

© 2009 Microchip Technology Inc.

6.0 TIMER0 MODULE

The Timer0 module timer/counter has the following features:

- 8-bit timer/counter
- Read/write capabilities
- 8-bit software programmable prescaler
- Internal or external clock select
- Interrupt on overflow from FFh to 00h
- Edge select for external clock

Figure 6-1 is a simplified block diagram of the Timer0 module. Additional information is available in the *"PIC® Mid-Range MCU Family Reference Manual"* (DS33023).

Timer mode is selected by clearing the T0CS bit (OPTION<5>). In Timer mode, the TMR0 register value will increment every instruction cycle (without prescaler). If the TMR0 register is written to, the increment is inhibited for the following two cycles. The user can work around this by writing an adjusted value to the TMR0 register.

Counter mode is selected by setting the T0CS bit. In this mode the TMR0 register value will increment either on every rising or falling edge of pin RA4/T0CKI/CMP2. The incrementing edge is determined by the source edge (T0SE) control bit (OPTION<4>). Clearing the T0SE bit selects the rising edge. Restrictions on the external clock input are discussed in detail in **Section 6.2 "Using Timer0 with External Clock"**.

The prescaler is shared between the Timer0 module and the Watchdog Timer. The prescaler assignment is controlled in software by the control bit PSA (OPTION<3>). Clearing the PSA bit will assign the prescaler to Timer0. The prescaler is not readable or writable. When the prescaler is assigned to the Timer0 module, prescale value of 1:2, 1:4,..., 1:256 are selectable. **Section 6.3 "Timer0 Prescaler"** details the operation of the prescaler.

6.1 Timer0 Interrupt

Timer0 interrupt is generated when the TMR0 register timer/counter overflows from FFh to 00h. This overflow sets the T0IF bit. The interrupt can be masked by clearing the T0IE bit (INTCON<5>). The T0IF bit (INTCON<2>) must be cleared in software by the Timer0 module interrupt service routine before re-enabling this interrupt. The Timer0 interrupt cannot wake the processor from Sleep since the timer is shut off during Sleep.

6.2 Using Timer0 with External Clock

When an external clock input is used for Timer0, it must meet certain requirements. The external clock requirement is due to internal phase clock (TOSC) synchronization. Also, there is a delay in the actual incrementing of Timer0 after synchronization.

6.2.1 EXTERNAL CLOCK SYNCHRONIZATION

When no prescaler is used, the external clock input is the same as the prescaler output. The synchronization of T0CKI with the internal phase clocks is accomplished by sampling the prescaler output on the Q2 and Q4 cycles of the internal phase clocks (Figure 6-1). Therefore, it is necessary for T0CKI to be high for at least 2TOSC (and a small RC delay of 20 ns) and low for at least 2TOSC (and a small RC delay of 20 ns). Refer to the electrical specification of the desired device.

When a prescaler is used, the external clock input is divided by the asynchronous ripple-counter type prescaler so that the prescaler output is symmetrical. For the external clock to meet the sampling requirement, the ripple-counter must be taken into account. Therefore, it is necessary for T0CKI to have a period of at least 4TOSC (and a small RC delay of 40 ns) divided by the prescaler value. The only requirement on T0CKI high and low time is that they do not violate the minimum pulse width requirement of 10 ns. Refer to parameters 40, 41 and 42 in the electrical specification of the desired device. See Table 17-8.

6.3 Timer0 Prescaler

An 8-bit counter is available as a prescaler for the Timer0 module, or as a postscaler for the Watchdog Timer. A prescaler assignment for the Timer0 module means that there is no postscaler for the Watchdog Timer, and vice-versa.

The PSA and PS<2:0> bits (OPTION<3:0>) determine the prescaler assignment and prescale ratio.

When assigned to the Timer0 module, all instructions writing to the TMR0 register (e.g., `CLRF 1, MOVWF 1, BSF 1, x....etc.`) will clear the prescaler. When assigned to WDT, a `CLRWDT` instruction will clear the prescaler along with the Watchdog Timer. The prescaler is not readable or writable.

FIGURE 6-1: BLOCK DIAGRAM OF THE TIMER0/WDT

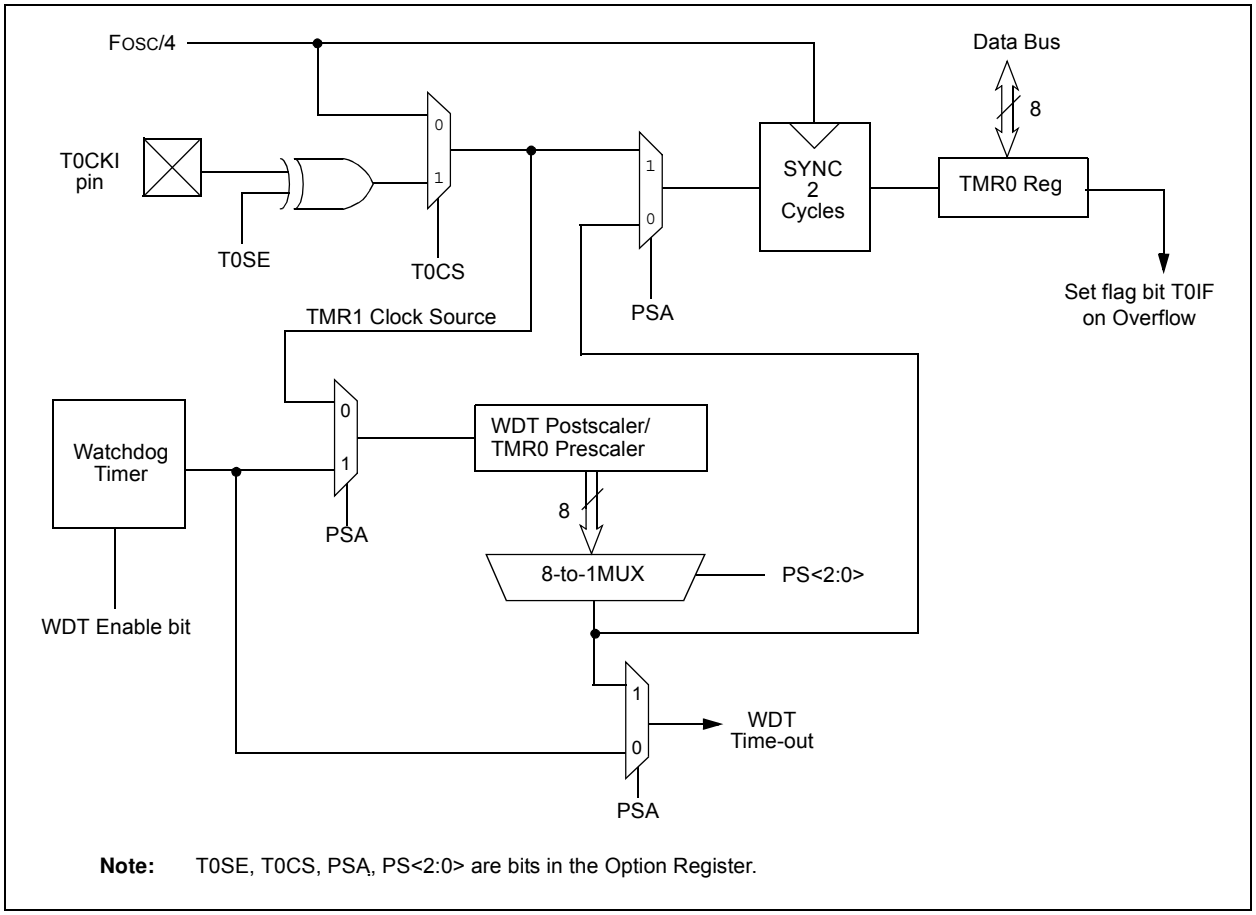

Note: T0SE, T0CS, PSA, PS<2:0> are bits in the Option Register.

© 2009 Microchip Technology Inc.

6.3.1 SWITCHING PRESCALER ASSIGNMENT

The prescaler assignment is fully under software control (i.e., it can be changed “on-the-fly” during program execution). Use the instruction sequences shown in Example 6-1 when changing the prescaler assignment from Timer0 to WDT, to avoid an unintended device Reset.

EXAMPLE 6-1: CHANGING PRESCALER (TIMER0 → WDT)

```
BCF     STATUS, RP0     ;Skip if already in
                        ;Bank 0
CLRWDT                  ;Clear WDT
CLRF    TMR0            ;Clear TMR0 and
                        ;Prescaler
BSF     STATUS, RP0     ;Bank 1
MOVLW   '00101111’b     ;These 3 lines
                        ;(5, 6, 7)
MOVWF   OPTION_REG      ;are required only
                        ;if desired PS<2:0>
                        ;are
CLRWDT                  ;000 or 001
MOVLW   '00101xxx’b     ;Set Postscaler to
MOVWF   OPTION_REG      ;desired WDT rate
BCF     STATUS, RP0     ;Return to Bank 0
```

To change prescaler from the WDT to the Timer0 module, use the sequence shown in Example 6-2. This precaution must be taken even if the WDT is disabled.

EXAMPLE 6-2: CHANGING PRESCALER (WDT → TIMER0)

```
CLRWDT                  ;Clear WDT and
                        ;prescaler
BSF     STATUS, RP0
MOVLW   b'xxxx0xxx’     ;Select TMR0, new
                        ;prescale value and
                        ;clock source
MOVWF   OPTION_REG
BCF     STATUS, RP0
```

TABLE 6-1: REGISTERS ASSOCIATED WITH TIMER0

Address	Name	Bit 7	Bit 6	Bit 5	Bit 4	Bit 3	Bit 2	Bit 1	Bit 0	Value on POR	Value on All Other Resets
01h, 101h	TMR0	Timer0 Module Register								xxxx xxxx	uuuu uuuu
0Bh, 8Bh, 10Bh, 18Bh	INTCON	GIE	PEIE	T0IE	INTE	RBIE	T0IF	INTF	RBIF	0000 000x	0000 000u
81h, 181h	OPTION(2)	$\overline{\text{RBPU}}$	INTEDG	T0CS	T0SE	PSA	PS2	PS1	PS0	1111 1111	1111 1111
85h	TRISA	TRISA7	TRISA6	TRISA5	TRISA4	TRISA3	TRISA2	TRISA1	TRISA0	1111 1111	1111 1111

Legend: - = Unimplemented locations, read as ‘0’, u = unchanged, x = unknown. Shaded cells are not used for Timer0.

Note 1: Option is referred by OPTION_REG in MPLAB® IDE Software.

7.0 TIMER1 MODULE

The Timer1 module is a 16-bit timer/counter consisting of two 8-bit registers (TMR1H and TMR1L) which are readable and writable. The TMR1 register pair (TMR1H:TMR1L) increments from 0000h to FFFFh and rolls over to 0000h. The Timer1 Interrupt, if enabled, is generated on overflow of the TMR1 register pair which latches the interrupt flag bit TMR1IF (PIR1<0>). This interrupt can be enabled/disabled by setting/clearing the Timer1 interrupt enable bit TMR1IE (PIE1<0>).

Timer1 can operate in one of two modes:

- As a timer
- As a counter

The Operating mode is determined by the clock select bit, TMR1CS (T1CON<1>).

In Timer mode, the TMR1 register pair value increments every instruction cycle. In Counter mode, it increments on every rising edge of the external clock input.

Timer1 can be enabled/disabled by setting/clearing control bit TMR1ON (T1CON<0>).

Timer1 also has an internal “Reset input”. This Reset can be generated by the CCP module (**Section 9.0 “Capture/Compare/PWM (CCP) Module”**). Register 7-1 shows the Timer1 control register.

For the PIC16F627A/628A/648A, when the Timer1 oscillator is enabled (T1OSCEN is set), the RB7/T1OSI/PGD and RB6/T1OSO/T1CKI/PGC pins become inputs. That is, the TRISB<7:6> value is ignored.

REGISTER 7-1: T1CON – TIMER1 CONTROL REGISTER (ADDRESS: 10h)

U-0	U-0	R/W-0	R/W-0	R/W-0	R/W-0	R/W-0	R/W-0
—	—	T1CKPS1	T1CKPS0	T1OSCEN	$\overline{\text{T1SYNC}}$	TMR1CS	TMR1ON
bit 7							bit 0

bit 7-6 **Unimplemented**: Read as ‘0’

bit 5-4 **T1CKPS<1:0>**: Timer1 Input Clock Prescale Select bits
11 = 1:8 Prescale value
10 = 1:4 Prescale value
01 = 1:2 Prescale value
00 = 1:1 Prescale value

bit 3 **T1OSCEN**: Timer1 Oscillator Enable Control bit
1 = Oscillator is enabled
0 = Oscillator is shut off(1)

bit 2 **$\overline{\text{T1SYNC}}$**: Timer1 External Clock Input Synchronization Control bit
TMR1CS = 1
1 = Do not synchronize external clock input
0 = Synchronize external clock input
TMR1CS = 0
This bit is ignored. Timer1 uses the internal clock when TMR1CS = 0.

bit 1 **TMR1CS**: Timer1 Clock Source Select bit
1 = External clock from pin RB6/T1OSO/T1CKI/PGC (on the rising edge)
0 = Internal clock (FOSC/4)

bit 0 **TMR1ON**: Timer1 On bit
1 = Enables Timer1
0 = Stops Timer1

Note 1: The oscillator inverter and feedback resistor are turned off to eliminate power drain.

Legend:			
R = Readable bit	W = Writable bit	U = Unimplemented bit, read as ‘0’	
-n = Value at POR	‘1’ = Bit is set	‘0’ = Bit is cleared	x = Bit is unknown

© 2009 Microchip Technology Inc.

7.1 Timer1 Operation in Timer Mode

Timer mode is selected by clearing the TMR1CS (T1CON<1>) bit. In this mode, the input clock to the timer is FOSC/4. The synchronize control bit $\overline{\text{T1SYNC}}$ (T1CON<2>) has no effect since the internal clock is always in sync.

7.2 Timer1 Operation in Synchronized Counter Mode

Counter mode is selected by setting bit TMR1CS. In this mode, the TMR1 register pair value increments on every rising edge of clock input on pin RB7/T1OSI/PGD when bit T1OSCEN is set or pin RB6/T1OSO/T1CKI/PGC when bit T1OSCEN is cleared.

If $\overline{\text{T1SYNC}}$ is cleared, then the external clock input is synchronized with internal phase clocks. The synchronization is done after the prescaler stage. The prescaler stage is an asynchronous ripple-counter.

In this configuration, during Sleep mode, the TMR1 register pair value will not increment even if the external clock is present, since the synchronization circuit is shut off. The prescaler however will continue to increment.

7.2.1 EXTERNAL CLOCK INPUT TIMING FOR SYNCHRONIZED COUNTER MODE

When an external clock input is used for Timer1 in Synchronized Counter mode, it must meet certain requirements. The external clock requirement is due to internal phase clock (TOSC) synchronization. Also, there is a delay in the actual incrementing of the TMR1 register pair value after synchronization.

When the prescaler is 1:1, the external clock input is the same as the prescaler output. The synchronization of T1CKI with the internal phase clocks is accomplished by sampling the prescaler output on the Q2 and Q4 cycles of the internal phase clocks. Therefore, it is necessary for T1CKI to be high for at least 2 TOSC (and a small RC delay of 20 ns) and low for at least 2 TOSC (and a small RC delay of 20 ns). Refer to Table 17-8 in the Electrical Specifications Section, timing parameters 45, 46 and 47.

When a prescaler other than 1:1 is used, the external clock input is divided by the asynchronous ripple-counter type prescaler so that the prescaler output is symmetrical. In order for the external clock to meet the sampling requirement, the ripple-counter must be taken into account. Therefore, it is necessary for T1CKI to have a period of at least 4 TOSC (and a small RC delay of 40 ns) divided by the prescaler value. The only requirement on T1CKI high and low time is that they do not violate the minimum pulse width requirements of 10 ns). Refer to the appropriate electrical specifications in Table 17-8, parameters 45, 46 and 47.

FIGURE 7-1: TIMER1 BLOCK DIAGRAM

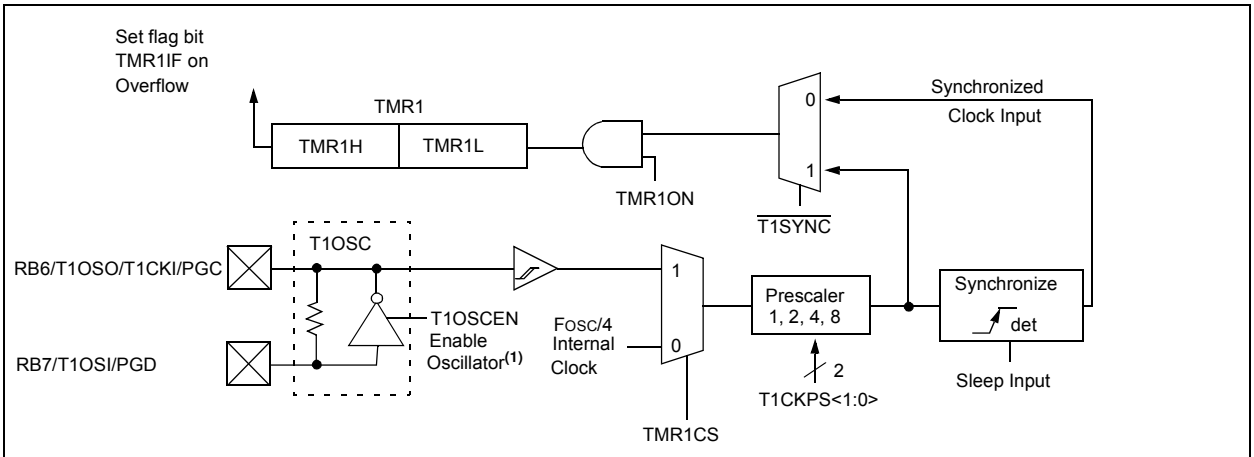

Note 1: When the T1OSCEN bit is cleared, the inverter and feedback resistor are turned off. This eliminates power drain.

7.3 Timer1 Operation in Asynchronous Counter Mode

If control bit $\overline{\text{T1SYNC}}$ (T1CON<2>) is set, the external clock input is not synchronized. The timer continues to increment asynchronous to the internal phase clocks. The timer will continue to run during Sleep and can generate an interrupt on overflow, which will wake-up the processor. However, special precautions in software are needed to read/write the timer (**Section 7.3.2 "Reading and Writing Timer1 in Asynchronous Counter Mode"**).

Note:	In Asynchronous Counter mode, Timer1 cannot be used as a time base for capture or compare operations.

7.3.1 EXTERNAL CLOCK INPUT TIMING WITH UNSYNCHRONIZED CLOCK

If control bit $\overline{\text{T1SYNC}}$ is set, the timer will increment completely asynchronously. The input clock must meet certain minimum high and low time requirements. Refer to Table 17-8 in the Electrical Specifications Section, timing parameters 45, 46 and 47.

7.3.2 READING AND WRITING TIMER1 IN ASYNCHRONOUS COUNTER MODE

Reading the TMR1H or TMR1L register, while the timer is running from an external asynchronous clock, will produce a valid read (taken care of in hardware). However, the user should keep in mind that reading the 16-bit timer in two 8-bit values itself poses certain problems since the timer may overflow between the reads.

For writes, it is recommended that the user simply stop the timer and write the desired values. A write contention may occur by writing to the timer registers while the register is incrementing. This may produce an unpredictable value in the timer register.

Reading the 16-bit value requires some care. Example 7-1 is an example routine to read the 16-bit timer value. This is useful if the timer cannot be stopped.

EXAMPLE 7-1: READING A 16-BIT FREE-RUNNING TIMER

```
; All interrupts are disabled
    MOVF    TMR1H, W    ;Read high byte
    MOVWF   TMPH        ;
    MOVF    TMR1L, W    ;Read low byte
    MOVWF   TMPL        ;
    MOVF    TMR1H, W    ;Read high byte
    SUBWF   TMPH, W     ;Sub 1st read with
                        ;2nd read
    BTFSC   STATUS,Z    ;Is result = 0
    GOTO    CONTINUE    ;Good 16-bit read
;
; TMR1L may have rolled over between the
; read of the high and low bytes. Reading
; the high and low bytes now will read a good
; value.
;
    MOVF    TMR1H, W    ;Read high byte
    MOVWF   TMPH        ;
    MOVF    TMR1L, W    ;Read low byte
    MOVWF   TMPL        ;
; Re-enable the Interrupts (if required)
CONTINUE                ;Continue with your
                        ;code
```


© 2009 Microchip Technology Inc.

7.4 Timer1 Oscillator

A crystal oscillator circuit is built in between pins T1OSI (input) and T1OSO (amplifier output). It is enabled by setting control bit T1OSCEN (T1CON<3>). It will continue to run during Sleep. It is primarily intended for a 32.768 kHz watch crystal. Table 7-1 shows the capacitor selection for the Timer1 oscillator.

The user must provide a software time delay to ensure proper oscillator start-up.

TABLE 7-1: CAPACITOR SELECTION FOR THE TIMER1 OSCILLATOR

Freq	C1	C2
32.768 kHz	15 pF	15 pF

Note: These values are for design guidance only. Consult Application Note AN826 "*Crystal Oscillator Basics and Crystal Selection for rfPIC® and PIC® Devices*" (DS00826) for further information on Crystal/Capacitor Selection.

7.5 Resetting Timer1 Using a CCP Trigger Output

If the CCP1 module is configured in Compare mode to generate a "special event trigger" (CCP1M<3:0> = `1011`), this signal will reset Timer1.

Note: The special event triggers from the CCP1 module will not set interrupt flag bit TMR1IF (PIR1<0>).

Timer1 must be configured for either timer or Synchronized Counter mode to take advantage of this feature. If Timer1 is running in Asynchronous Counter mode, this Reset operation may not work.

In the event that a write to Timer1 coincides with a special event trigger from CCP1, the write will take precedence.

In this mode of operation, the CCPRxH:CCPRxL register pair effectively becomes the period register for Timer1.

7.6 Resetting Timer1 Register Pair (TMR1H, TMR1L)

TMR1H and TMR1L registers are not reset to 00h on a POR or any other Reset except by the CCP1 special event triggers (see **Section 9.2.4 "Special Event Trigger"**).

T1CON register is reset to 00h on a Power-on Reset or a Brown-out Reset, which shuts off the timer and leaves a 1:1 prescale. In all other Resets, the register is unaffected.

7.7 Timer1 Prescaler

The prescaler counter is cleared on writes to the TMR1H or TMR1L registers.

TABLE 7-2: REGISTERS ASSOCIATED WITH TIMER1 AS A TIMER/COUNTER

Address	Name	Bit 7	Bit 6	Bit 5	Bit 4	Bit 3	Bit 2	Bit 1	Bit 0	Value on POR	Value on all other Resets
0Bh, 8Bh, 10Bh, 18Bh	INTCON	GIE	PEIE	T0IE	INTE	RBIE	T0IF	INTF	RBIF	`0000 000x`	`0000 000u`
0Ch	PIR1	EEIF	CMIF	RCIF	TXIF	—	CCP1IF	TMR2IF	TMR1IF	`0000 -000`	`0000 -000`
8Ch	PIE1	EEIE	CMIE	RCIE	TXIE	—	CCP1IE	TMR2IE	TMR1IE	`0000 -000`	`0000 -000`
0Eh	TMR1L	Holding Register for the Least Significant Byte of the 16-bit TMR1 Register								`xxxx xxxx`	`uuuu uuuu`
0Fh	TMR1H	Holding Register for the Most Significant Byte of the 16-bit TMR1 Register								`xxxx xxxx`	`uuuu uuuu`
10h	T1CON	—	—	T1CKPS1	T1CKPS0	T1OSCEN	$\overline{\text{T1SYNC}}$	TMR1CS	TMR1ON	`--00 0000`	`--uu uuuu`

Legend: `x` = unknown, `u` = unchanged, `-` = unimplemented read as '`0`'. Shaded cells are not used by the Timer1 module.

8.0 TIMER2 MODULE

Timer2 is an 8-bit timer with a prescaler and a postscaler. It can be used as the PWM time base for PWM mode of the CCP module. The TMR2 register is readable and writable, and is cleared on any device Reset.

The input clock (FOSC/4) has a prescale option of 1:1, 1:4 or 1:16, selected by control bits T2CKPS<1:0> (T2CON<1:0>).

The Timer2 module has an 8-bit period register PR2. The TMR2 register value increments from 00h until it matches the PR2 register value and then resets to 00h on the next increment cycle. The PR2 register is a readable and writable register. The PR2 register is initialized to FFh upon Reset.

The match output of Timer2 goes through a 4-bit postscaler (which gives a 1:1 to 1:16 scaling inclusive) to generate a Timer2 interrupt (latched in flag bit TMR2IF, (PIR1<1>)).

Timer2 can be shut off by clearing control bit TMR2ON (T2CON<2>) to minimize power consumption.

Register 8-1 shows the Timer2 control register.

8.1 Timer2 Prescaler and Postscaler

The prescaler and postscaler counters are cleared when any of the following occurs:

- a write to the TMR2 register
- a write to the T2CON register
- any device Reset (Power-on Reset, $\overline{\text{MCLR}}$ Reset, Watchdog Timer Reset or Brown-out Reset)

The TMR2 register is not cleared when T2CON is written.

8.2 TMR2 Output

The TMR2 output (before the postscaler) is fed to the Synchronous Serial Port module which optionally uses it to generate shift clock.

FIGURE 8-1: TIMER2 BLOCK DIAGRAM

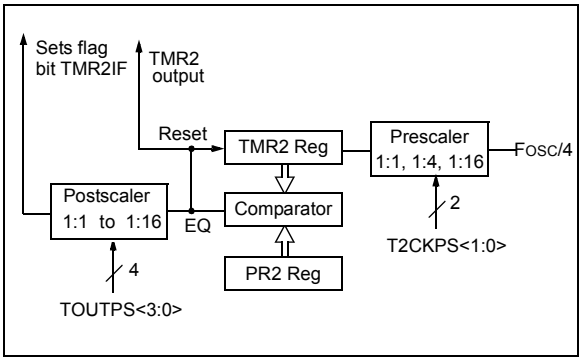

© 2009 Microchip Technology Inc.

REGISTER 8-1: T2CON – TIMER2 CONTROL REGISTER (ADDRESS: 12h)

U-0	R/W-0	R/W-0	R/W-0	R/W-0	R/W-0	R/W-0	R/W-0
—	TOUTPS3	TOUTPS2	TOUTPS1	TOUTPS0	TMR2ON	T2CKPS1	T2CKPS0
bit 7							bit 0

bit 7 **Unimplemented**: Read as '0'

bit 6-3 **TOUTPS<3:0>**: Timer2 Output Postscale Select bits
0000 = 1:1 Postscale Value
0001 = 1:2 Postscale Value
•
•
•
1111 = 1:16 Postscale

bit 2 **TMR2ON**: Timer2 On bit
1 = Timer2 is on
0 = Timer2 is off

bit 1-0 **T2CKPS<1:0>**: Timer2 Clock Prescale Select bits
00 = 1:1 Prescaler Value
01 = 1:4 Prescaler Value
1x = 1:16 Prescaler Value

Legend:			
R = Readable bit	W = Writable bit	U = Unimplemented bit, read as '0'	
-n = Value at POR	'1' = Bit is set	'0' = Bit is cleared	x = Bit is unknown

TABLE 8-1: REGISTERS ASSOCIATED WITH TIMER2 AS A TIMER/COUNTER

Address	Name	Bit 7	Bit 6	Bit 5	Bit 4	Bit 3	Bit 2	Bit 1	Bit 0	Value on POR	Value on all other Resets
0Bh, 8Bh, 10Bh, 18Bh	INTCON	GIE	PEIE	T0IE	INTE	RBIE	T0IF	INTF	RBIF	0000 000x	0000 000u
0Ch	PIR1	EEIF	CMIF	RCIF	TXIF	—	CCP1IF	TMR2IF	TMR1IF	0000 -000	0000 -000
8Ch	PIE1	EEIE	CMIE	RCIE	TXIE	—	CCP1IE	TMR2IE	TMR1IE	0000 -000	0000 -000
11h	TMR2	Timer2 Module's Register								0000 0000	0000 0000
12h	T2CON	—	TOUTPS3	TOUTPS2	TOUTPS1	TOUTPS0	TMR2ON	T2CKPS1	T2CKPS0	-000 0000	-000 0000
92h	PR2	Timer2 Period Register								1111 1111	1111 1111

Legend: x = unknown, u = unchanged, - = unimplemented read as '0'. Shaded cells are not used by the Timer2 module.

NOTES:

© 2009 Microchip Technology Inc.

9.0 CAPTURE/COMPARE/PWM (CCP) MODULE

The CCP (Capture/Compare/PWM) module contains a 16-bit register which can operate as a 16-bit Capture register, as a 16-bit Compare register or as a PWM master/slave Duty Cycle register. Table 9-1 shows the timer resources of the CCP module modes.

CCP1 Module

Capture/Compare/PWM Register1 (CCPR1) is comprised of two 8-bit registers: CCPR1L (low byte) and CCPR1H (high byte). The CCP1CON register controls the operation of CCP1. All are readable and writable.

Additional information on the CCP module is available in the "*PIC® Mid-Range MCU Family Reference Manual*" (DS33023).

TABLE 9-1: CCP MODE – TIMER RESOURCE

CCP Mode	Timer Resource
Capture	Timer1
Compare	Timer1
PWM	Timer2

REGISTER 9-1: CCP1CON – CCP OPERATION REGISTER (ADDRESS: 17h)

U-0	U-0	R/W-0	R/W-0	R/W-0	R/W-0	R/W-0	R/W-0
—	—	CCP1X	CCP1Y	CCP1M3	CCP1M2	CCP1M1	CCP1M0
bit 7							bit 0

bit 7-6 **Unimplemented**: Read as '0'

bit 5-4 **CCP1X:CCP1Y**: PWM Least Significant bits

Capture Mode
Unused

Compare Mode
Unused

PWM Mode
These bits are the two LSbs of the PWM duty cycle. The eight MSbs are found in CCPRxL.

bit 3-0 **CCP1M<3:0>**: CCPx Mode Select bits

0000 = Capture/Compare/PWM off (resets CCP1 module)
0100 = Capture mode, every falling edge
0101 = Capture mode, every rising edge
0110 = Capture mode, every 4th rising edge
0111 = Capture mode, every 16th rising edge
1000 = Compare mode, set output on match (CCP1IF bit is set)
1001 = Compare mode, clear output on match (CCP1IF bit is set)
1010 = Compare mode, generate software interrupt on match (CCP1IF bit is set, CCP1 pin is unaffected)
1011 = Compare mode, trigger special event (CCP1IF bit is set; CCP1 resets TMR1
11xx = PWM mode

Legend:			
R = Readable bit	W = Writable bit	U = Unimplemented bit, read as '0'	
-n = Value at POR	'1' = Bit is set	'0' = Bit is cleared	x = Bit is unknown

9.1 Capture Mode

In Capture mode, CCPR1H:CCPR1L captures the 16-bit value of the TMR1 register when an event occurs on pin RB3/CCP1. An event is defined as:

- Every falling edge
- Every rising edge
- Every 4th rising edge
- Every 16th rising edge

An event is selected by control bits CCP1M<3:0> (CCP1CON<3:0>). When a capture is made, the interrupt request flag bit CCP1IF (PIR1<2>) is set. It must be cleared in software. If another capture occurs before the value in register CCPR1 is read, the old captured value will be lost.

9.1.1 CCP PIN CONFIGURATION

In Capture mode, the RB3/CCP1 pin should be configured as an input by setting the TRISB<3> bit.

Note:	If the RB3/CCP1 is configured as an output, a write to the port can cause a capture condition.

FIGURE 9-1: CAPTURE MODE OPERATION BLOCK DIAGRAM

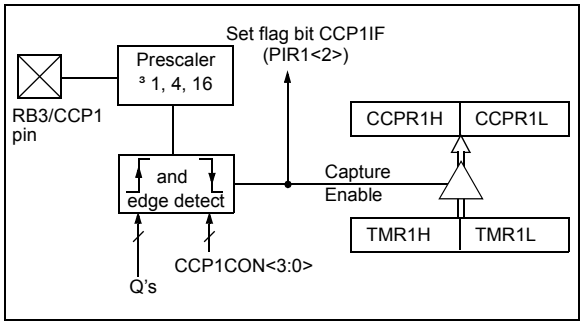

9.1.2 TIMER1 MODE SELECTION

Timer1 must be running in Timer mode or Synchronized Counter mode for the CCP module to use the capture feature. In Asynchronous Counter mode, the capture operation may not work.

9.1.3 SOFTWARE INTERRUPT

When the Capture mode is changed, a false capture interrupt may be generated. The user should keep bit CCP1IE (PIE1<2>) clear to avoid false interrupts and should clear the flag bit CCP1IF following any such change in Operating mode.

9.1.4 CCP PRESCALER

There are four prescaler settings, specified by bits CCP1M<3:0>. Whenever the CCP module is turned off, or the CCP module is not in Capture mode, the prescaler counter is cleared. This means that any Reset will clear the prescaler counter.

Switching from one capture prescaler to another may generate an interrupt. Also, the prescaler counter will not be cleared, therefore the first capture may be from a non-zero prescaler. Example 9-1 shows the recommended method for switching between capture prescalers. This example also clears the prescaler counter and will not generate the "false" interrupt.

EXAMPLE 9-1: CHANGING BETWEEN CAPTURE PRESCALERS

```
CLRF    CCP1CON     ;Turn CCP module off
MOVLW   NEW_CAPT_PS ;Load the W reg with
                    ; the new prescaler
                    ; mode value and CCP ON
MOVWF   CCP1CON     ;Load CCP1CON with this
                    ; value
```

9.2 Compare Mode

In Compare mode, the 16-bit CCPR1 register value is constantly compared against the TMR1 register pair value. When a match occurs, the RB3/CCP1 pin is:

- Driven high
- Driven low
- Remains unchanged

The action on the pin is based on the value of control bits CCP1M<3:0> (CCP1CON<3:0>). At the same time, interrupt flag bit CCP1IF is set.

FIGURE 9-2: COMPARE MODE OPERATION BLOCK DIAGRAM

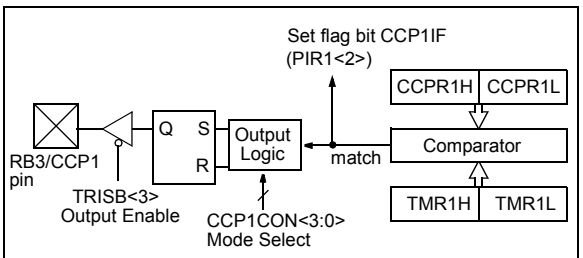

Note: Special event trigger will reset Timer1, but not set interrupt flag bit TMR1IF (PIR1<0>).

© 2009 Microchip Technology Inc.

9.2.1 CCP PIN CONFIGURATION

The user must configure the RB3/CCP1 pin as an output by clearing the TRISB<3> bit.

> **Note:** Clearing the CCP1CON register will force the RB3/CCP1 compare output latch to the default low level. This is not the data latch.

9.2.2 TIMER1 MODE SELECTION

Timer1 must be running in Timer mode or Synchronized Counter mode if the CCP module is using the compare feature. In Asynchronous Counter mode, the compare operation may not work.

9.2.3 SOFTWARE INTERRUPT MODE

When generate software interrupt is chosen the CCP1 pin is not affected. Only a CCP interrupt is generated (if enabled).

9.2.4 SPECIAL EVENT TRIGGER

In this mode (CCP1M<3:0>=1011), an internal hardware trigger is generated, which may be used to initiate an action. See Register 9-1.

The special event trigger output of the CCP occurs immediately upon a match between the TMR1H, TMR1L register pair and CCPR1H, CCPR1L register pair. The TMR1H, TMR1L register pair is not reset until the next rising edge of the TMR1 clock. This allows the CCPR1 register pair to effectively be a 16-bit programmable period register for Timer1. The special event trigger output also starts an A/D conversion provided that the A/D module is enabled.

> **Note:** Removing the match condition by changing the contents of the CCPR1H, CCPR1L register pair between the clock edge that generates the special event trigger and the clock edge that generates the TMR1 Reset will preclude the Reset from occuring.

TABLE 9-2: REGISTERS ASSOCIATED WITH CAPTURE, COMPARE, AND TIMER1

Address	Name	Bit 7	Bit 6	Bit 5	Bit 4	Bit 3	Bit 2	Bit 1	Bit 0	Value on POR	Value on all other Resets
0Bh, 8Bh, 10Bh, 18Bh	INTCON	GIE	PEIE	T0IE	INTE	RBIE	T0IF	INTF	RBIF	0000 000x	0000 000u
0Ch	PIR1	EEIF	CMIF	RCIF	TXIF	—	CCP1IF	TMR2IF	TMR1IF	0000 -000	0000 -000
8Ch	PIE1	EEIE	CMIE	RCIE	TXIE	—	CCP1IE	TMR2IE	TMR1IE	0000 -000	0000 -000
86h, 186h	TRISB	PORTB Data Direction Register								1111 1111	1111 1111
0Eh	TMR1L	Holding Register for the Least Significant Byte of the 16-bit TMR1 Register								xxxx xxxx	uuuu uuuu
0Fh	TMR1H	Holding Register for the Most Significant Byte of the 16-bit TMR1 Register								xxxx xxxx	uuuu uuuu
10h	T1CON	—	—	T1CKPS1	T1CKPS0	T1OSCEN	$\overline{\text{T1SYNC}}$	TMR1CS	TMR1ON	--00 0000	--uu uuuu
15h	CCPR1L	Capture/Compare/PWM Register1 (LSB)								xxxx xxxx	uuuu uuuu
16h	CCPR1H	Capture/Compare/PWM Register1 (MSB)								xxxx xxxx	uuuu uuuu
17h	CCP1CON	—	—	CCP1X	CCP1Y	CCP1M3	CCP1M2	CCP1M1	CCP1M0	--00 0000	--00 0000

Legend: x = unknown, u = unchanged, - = unimplemented read as '0'. Shaded cells are not used by Capture and Timer1.

9.3 PWM Mode

In Pulse Width Modulation (PWM) mode, the CCP1 pin produces up to a 10-bit resolution PWM output. Since the CCP1 pin is multiplexed with the PORTB data latch, the TRISB<3> bit must be cleared to make the CCP1 pin an output.

Note:	Clearing the CCP1CON register will force the CCP1 PWM output latch to the default low level. This is not the PORTB I/O data latch.

Figure 9-3 shows a simplified block diagram of the CCP module in PWM mode.

For a step by step procedure on how to set up the CCP module for PWM operation, see **Section 9.3.3 "Set-Up for PWM Operation"**.

FIGURE 9-3: SIMPLIFIED PWM BLOCK DIAGRAM

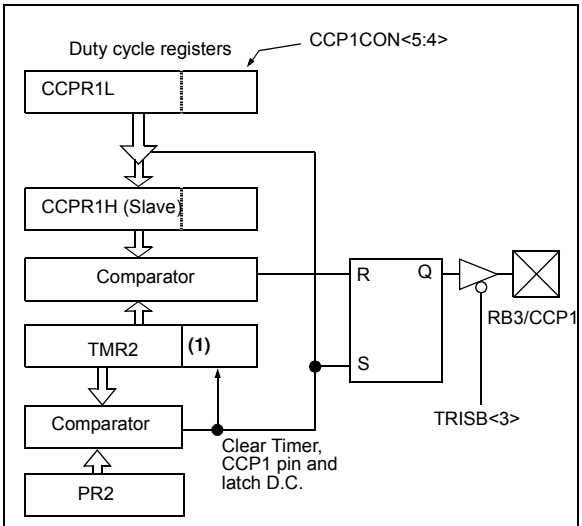

Note 1: 8-bit timer is concatenated with 2-bit internal Q clock or 2 bits of the prescaler to create 10-bit time base.

A PWM output (Figure 9-4) has a time base (period) and a time that the output stays high (duty cycle). The frequency of the PWM is the inverse of the period (frequency = 1/period).

FIGURE 9-4: PWM OUTPUT

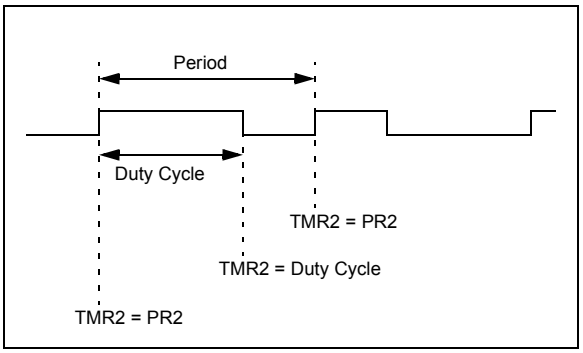

9.3.1 PWM PERIOD

The PWM period is specified by writing to the PR2 register. The PWM period can be calculated using the following formula:

$$PWM\ period = [(PR2) + 1] \cdot 4 \cdot Tosc \cdot TMR2\ prescale\ value$$

PWM frequency is defined as 1/[PWM period].

When TMR2 is equal to PR2, the following three events occur on the next increment cycle:

- TMR2 is cleared
- The CCP1 pin is set (exception: if PWM duty cycle = 0%, the CCP1 pin will not be set)
- The PWM duty cycle is latched from CCPR1L into CCPR1H

Note:	The Timer2 postscaler (see **Section 8.0 "Timer2 Module"**) is not used in the determination of the PWM frequency. The postscaler could be used to have a servo update rate at a different frequency than the PWM output.

© 2009 Microchip Technology Inc.

9.3.2 PWM DUTY CYCLE

The PWM duty cycle is specified by writing to the CCPR1L register and to the CCP1CON<5:4> bits. Up to 10-bit resolution is available: the CCPR1L contains the eight MSbs and the CCP1CON<5:4> contains the two LSbs. This 10-bit value is represented by CCPR1L:CCP1CON<5:4>. The following equation is used to calculate the PWM duty cycle in time:

$$PWM\ duty\ cycle = (CCPR1L{:}CCP1CON\langle 5{:}4\rangle) \cdot Tosc \cdot TMR2\ prescale\ value$$

CCPR1L and CCP1CON<5:4> can be written to at any time, but the duty cycle value is not latched into CCPR1H until after a match between PR2 and TMR2 occurs (i.e., the period is complete). In PWM mode, CCPR1H is a read-only register.

The CCPR1H register and a 2-bit internal latch are used to double buffer the PWM duty cycle. This double buffering is essential for glitchless PWM operation.

When the CCPR1H and 2-bit latch match TMR2 concatenated with an internal 2-bit Q clock or 2 bits of the TMR2 prescaler, the CCP1 pin is cleared.

Maximum PWM resolution (bits) for a given PWM frequency:

$$PWM\ Resolution = \frac{\log\left(\frac{Fosc}{FPWM \times TMR2\ Prescaler}\right)}{\log(2)}\ bits$$

Note: If the PWM duty cycle value is longer than the PWM period the CCP1 pin will not be cleared.

For an example PWM period and duty cycle calculation, see the *PIC® Mid-Range Reference Manual* (DS33023).

9.3.3 SET-UP FOR PWM OPERATION

The following steps should be taken when configuring the CCP module for PWM operation:

1. Set the PWM period by writing to the PR2 register.
2. Set the PWM duty cycle by writing to the CCPR1L register and CCP1CON<5:4> bits.
3. Make the CCP1 pin an output by clearing the TRISB<3> bit.
4. Set the TMR2 prescale value and enable Timer2 by writing to T2CON.

TABLE 9-3: EXAMPLE PWM FREQUENCIES AND RESOLUTIONS AT 20 MHz

PWM Frequency	1.22 kHz	4.88 kHz	19.53 kHz	78.12 kHz	156.3 kHz	208.3 kHz
Timer Prescaler (1, 4, 16)	16	4	1	1	1	1
PR2 Value	0xFF	0xFF	0xFF	0x3F	0x1F	0x17
Maximum Resolution (bits)	10	10	10	8	7	6.5

TABLE 9-4: REGISTERS ASSOCIATED WITH PWM AND TIMER2

Address	Name	Bit 7	Bit 6	Bit 5	Bit 4	Bit 3	Bit 2	Bit 1	Bit 0	Value on POR	Value on all other Resets
0Bh, 8Bh, 10Bh, 18Bh	INTCON	GIE	PEIE	T0IE	INTE	RBIE	T0IF	INTF	RBIF	0000 000x	0000 000u
0Ch	PIR1	EEIF	CMIF	RCIF	TXIF	—	CCP1IF	TMR2IF	TMR1IF	0000 -000	0000 -000
8Ch	PIE1	EEIE	CMIE	RCIE	TXIE	—	CCP1IE	TMR2IE	TMR1IE	0000 -000	0000 -000
86h, 186h	TRISB	TRISB7	TRISB6	TRISB5	TRISB4	TRISB3	TRISB2	TRISB1	TRISB0	1111 1111	1111 1111
11h	TMR2	Timer2 Module's Register								0000 0000	0000 0000
92h	PR2	Timer2 Module's Period Register								1111 1111	1111 1111
12h	T2CON	—	TOUTPS3	TOUTPS2	TOUTPS1	TOUTPS0	TMR2ON	T2CKPS1	T2CKPS0	-000 0000	uuuu uuuu
15h	CCPR1L	Capture/Compare/PWM Register 1 (LSB)								xxxx xxxx	uuuu uuuu
16h	CCPR1H	Capture/Compare/PWM Register 1 (MSB)								xxxx xxxx	uuuu uuuu
17h	CCP1CON	—	—	CCP1X	CCP1Y	CCP1M3	CCP1M2	CCP1M1	CCP1M0	--00 0000	--00 0000

Legend: x = unknown, u = unchanged, - = unimplemented read as '0'. Shaded cells are not used by PWM and Timer2.

NOTES:

© 2009 Microchip Technology Inc.

10.0 COMPARATOR MODULE

The comparator module contains two analog comparators. The inputs to the comparators are multiplexed with the RA0 through RA3 pins. The on-chip Voltage Reference (**Section 11.0 "Voltage Reference Module"**) can also be an input to the comparators.

The CMCON register, shown in Register 10-1, controls the comparator input and output multiplexers. A block diagram of the comparator is shown in Figure 10-1.

REGISTER 10-1: CMCON – COMPARATOR CONFIGURATION REGISTER (ADDRESS: 01Fh)

R-0	R-0	R/W-0	R/W-0	R/W-0	R/W-0	R/W-0	R/W-0
C2OUT	C1OUT	C2INV	C1INV	CIS	CM2	CM1	CM0
bit 7							bit 0

bit 7 **C2OUT**: Comparator 2 Output bit
When C2INV = 0:
1 = C2 VIN+ > C2 VIN-
0 = C2 VIN+ < C2 VIN-

When C2INV = 1:
1 = C2 VIN+ < C2 VIN-
0 = C2 VIN+ > C2 VIN-

bit 6 **C1OUT**: Comparator 1 Output bit
When C1INV = 0:
1 = C1 VIN+ > C1 VIN-
0 = C1 VIN+ < C1 VIN-

When C1INV = 1:
1 = C1 VIN+ < C1 VIN-
0 = C1 VIN+ > C1 VIN-

bit 5 **C2INV**: Comparator 2 Output Inversion bit
1 = C2 Output inverted
0 = C2 Output not inverted

bit 4 **C1INV**: Comparator 1 Output Inversion bit
1 = C1 Output inverted
0 = C1 Output not inverted

bit 3 **CIS**: Comparator Input Switch bit
When CM<2:0>: = 001
Then:
1 = C1 VIN- connects to RA3
0 = C1 VIN- connects to RA0

When CM<2:0> = 010
Then:
1 = C1 VIN- connects to RA3
C2 VIN- connects to RA2
0 = C1 VIN- connects to RA0
C2 VIN- connects to RA1

bit 2-0 **CM<2:0>**: Comparator Mode bits
Figure 10-1 shows the comparator modes and CM<2:0> bit settings

Legend:			
R = Readable bit	W = Writable bit	U = Unimplemented bit, read as '0'	
-n = Value at POR	'1' = Bit is set	'0' = Bit is cleared	x = Bit is unknown

10.1 Comparator Configuration

There are eight modes of operation for the comparators. The CMCON register is used to select the mode. Figure 10-1 shows the eight possible modes. The TRISA register controls the data direction of the comparator pins for each mode.

If the Comparator mode is changed, the comparator output level may not be valid for the specified mode change delay shown in Table 17-2.

> **Note 1:** Comparator interrupts should be disabled during a Comparator mode change, otherwise a false interrupt may occur.
>
> **2:** Comparators can have an inverted output. See Figure 10-1.

FIGURE 10-1: COMPARATOR I/O OPERATING MODES

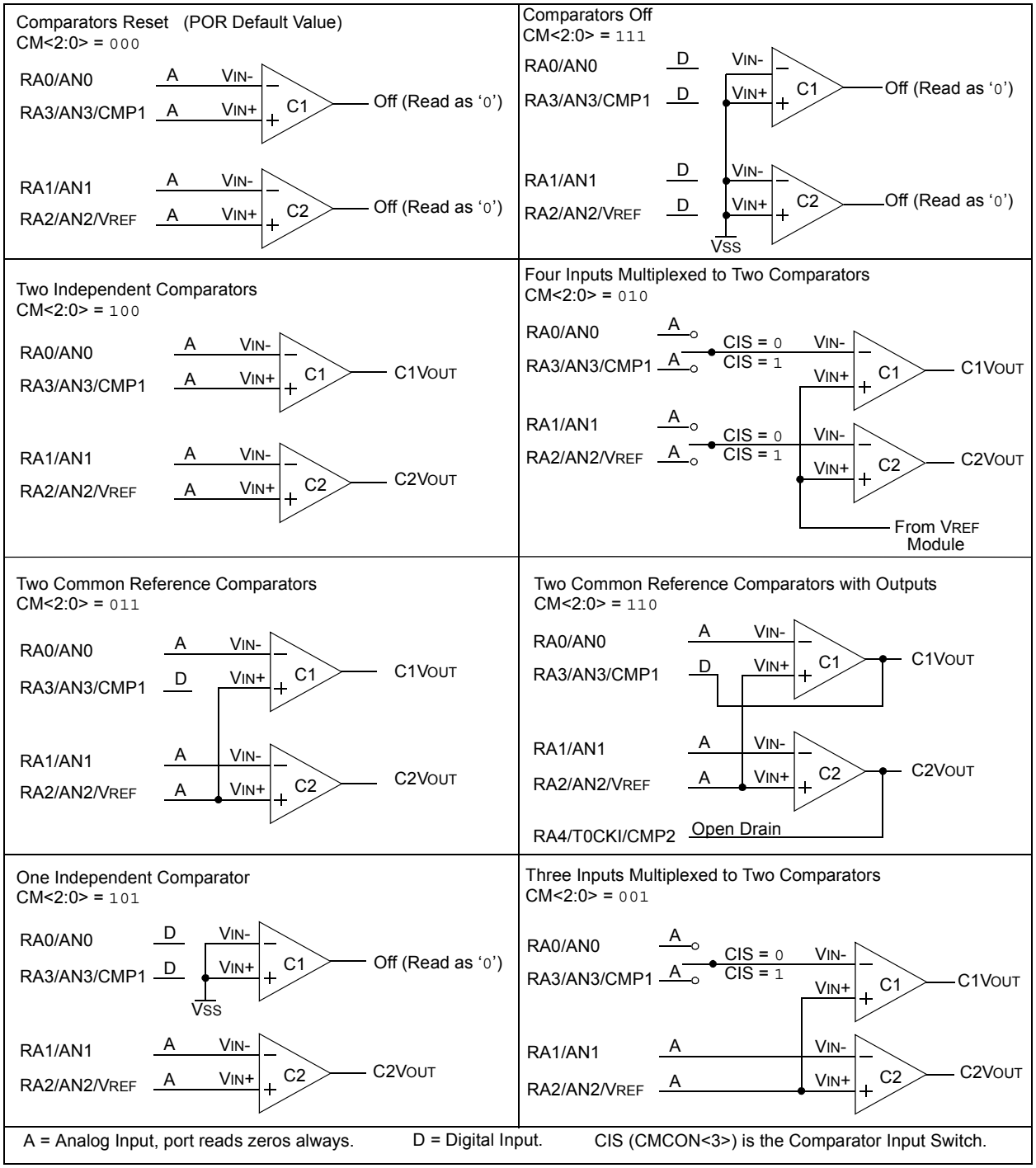

© 2009 Microchip Technology Inc.

The code example in Example 10-1 depicts the steps required to configure the Comparator module. RA3 and RA4 are configured as digital output. RA0 and RA1 are configured as the V- inputs and RA2 as the V+ input to both comparators.

EXAMPLE 10-1: INITIALIZING COMPARATOR MODULE

```
FLAG_REG     EQU                0X20
CLRF     FLAG_REG    ;Init flag register
CLRF     PORTA       ;Init PORTA
MOVF     CMCON, W    ;Load comparator bits
ANDLW    0xC0        ;Mask comparator bits
IORWF    FLAG_REG,F  ;Store bits in flag register
MOVLW    0x03        ;Init comparator mode
MOVWF    CMCON       ;CM<2:0> = 011
BSF      STATUS,RP0  ;Select Bank1
MOVLW    0x07        ;Initialize data direction
MOVWF    TRISA       ;Set RA<2:0> as inputs
                     ;RA<4:3> as outputs
                     ;TRISA<7:5> always read '0'
BCF      STATUS,RP0  ;Select Bank 0
CALL     DELAY10     ;10Ms delay
MOVF     CMCON,F     ;Read CMCONto end change
                     ;condition
BCF      PIR1,CMIF   ;Clear pending interrupts
BSF      STATUS,RP0  ;Select Bank 1
BSF      PIE1,CMIE   ;Enable comparator interrupts
BCF      STATUS,RP0  ;Select Bank 0
BSF      INTCON,PEIE ;Enable peripheral interrupts
BSF      INTCON,GIE  ;Global interrupt enable
```

10.2 Comparator Operation

A single comparator is shown in Figure 10-2 along with the relationship between the analog input levels and the digital output. When the analog input at VIN+ is less than the analog input VIN-, the output of the comparator is a digital low level. When the analog input at VIN+ is greater than the analog input VIN-, the output of the comparator is a digital high level. The shaded areas of the output of the comparator in Figure 10-2 represent the uncertainty due to input offsets and response time. See Table 17-2 for Common Mode voltage.

10.3 Comparator Reference

An external or internal reference signal may be used depending on the comparator Operating mode. The analog signal that is present at VIN- is compared to the signal at VIN+, and the digital output of the comparator is adjusted accordingly (Figure 10-2).

FIGURE 10-2: SINGLE COMPARATOR

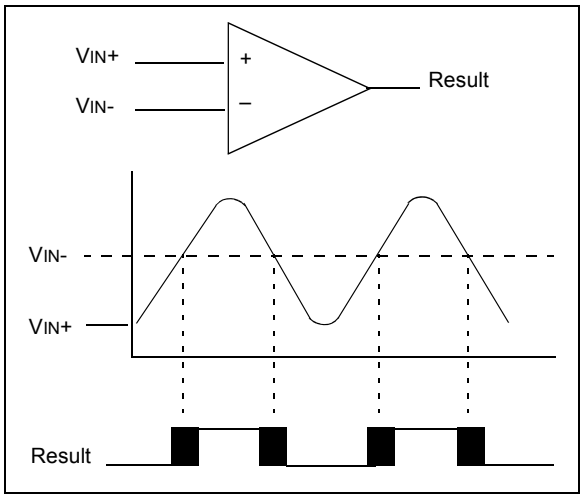

10.3.1 EXTERNAL REFERENCE SIGNAL

When external voltage references are used, the Comparator module can be configured to have the comparators operate from the same or different reference sources. However, threshold detector applications may require the same reference. The reference signal must be between VSS and VDD, and can be applied to either pin of the comparator(s).

10.3.2 INTERNAL REFERENCE SIGNAL

The Comparator module also allows the selection of an internally generated voltage reference for the comparators. **Section 11.0 "Voltage Reference Module"**, contains a detailed description of the Voltage Reference module that provides this signal. The internal reference signal is used when the comparators are in mode CM<2:0> = `010` (Figure 10-1). In this mode, the internal voltage reference is applied to the VIN+ pin of both comparators.

10.4 Comparator Response Time

Response time is the minimum time, after selecting a new reference voltage or input source, before the comparator output is to have a valid level. If the internal reference is changed, the maximum delay of the internal voltage reference must be considered when using the comparator outputs. Otherwise, the maximum delay of the comparators should be used (Table 17-2, page 142).

10.5 Comparator Outputs

The comparator outputs are read through the CMCON register. These bits are read-only. The comparator outputs may also be directly output to the RA3 and RA4 I/O pins. When the CM<2:0> = `110` or `001`, multiplexors in the output path of the RA3 and RA4/T0CK1/CMP2 pins will switch and the output of each pin will be the unsynchronized output of the comparator. The uncertainty of each of the comparators is related to the input offset voltage and the response time given in the specifications. Figure 10-3 shows the comparator output block diagram.

The TRISA bits will still function as an output enable/disable for the RA3/AN3/CMP1 and RA4/T0CK1/CMP2 pins while in this mode.

Note 1:	When reading the PORT register, all pins configured as analog inputs will read as a '`0`'. Pins configured as digital inputs will convert an analog input, according to the Schmitt Trigger input specification.
2:	Analog levels on any pin that is defined as a digital input may cause the input buffer to consume more current than is specified.

FIGURE 10-3: MODIFIED COMPARATOR OUTPUT BLOCK DIAGRAM

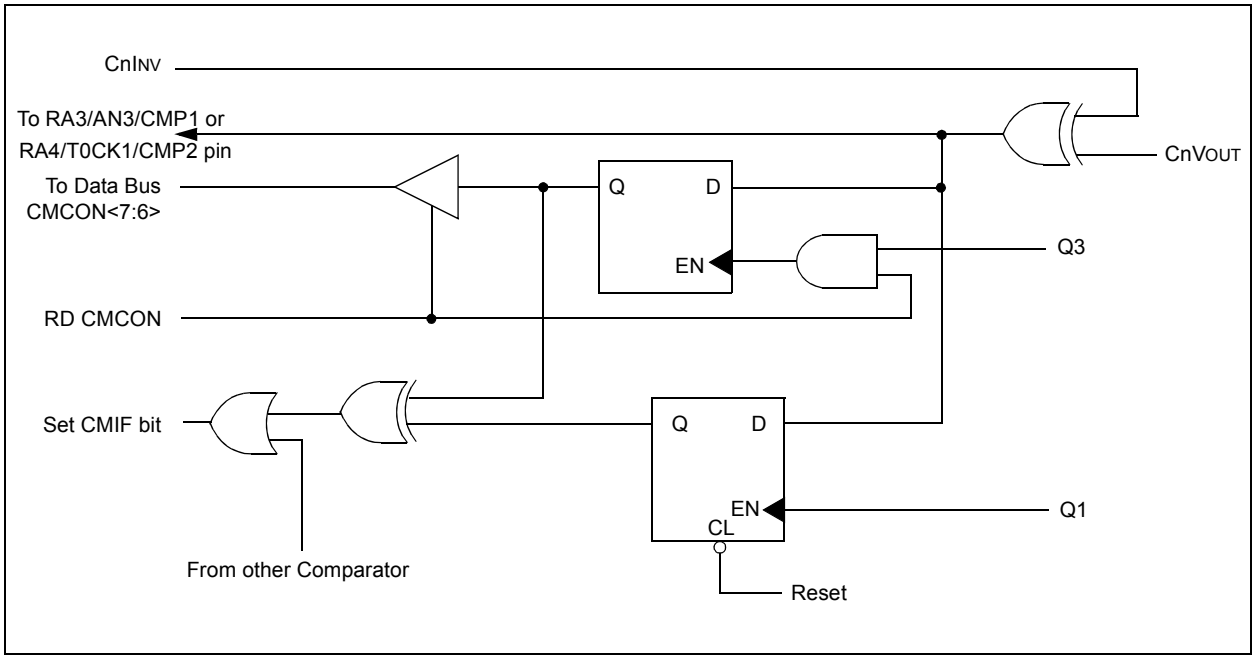

© 2009 Microchip Technology Inc.

10.6 Comparator Interrupts

The comparator interrupt flag is set whenever there is a change in the output value of either comparator. Software will need to maintain information about the status of the output bits, as read from CMCON<7:6>, to determine the actual change that has occurred. The CMIF bit, PIR1<6>, is the comparator interrupt flag. The CMIF bit must be reset by clearing '0'. Since it is also possible to write a '1' to this register, a simulated interrupt may be initiated.

The CMIE bit (PIE1<6>) and the PEIE bit (INTCON<6>) must be set to enable the interrupt. In addition, the GIE bit must also be set. If any of these bits are clear, the interrupt is not enabled, though the CMIF bit will still be set if an interrupt condition occurs.

Note:	If a change in the CMCON register (C1OUT or C2OUT) should occur when a read operation is being executed (start of the Q2 cycle), then the CMIF (PIR1<6>) interrupt flag may not get set.

The user, in the interrupt service routine, can clear the interrupt in the following manner:

a) Any write or read of CMCON. This will end the mismatch condition.

b) Clear flag bit CMIF.

A mismatch condition will continue to set flag bit CMIF. Reading CMCON will end the mismatch condition and allow flag bit CMIF to be cleared.

10.7 Comparator Operation During Sleep

When a comparator is active and the device is placed in Sleep mode, the comparator remains active and the interrupt is functional if enabled. This interrupt will wake-up the device from Sleep mode when enabled. While the comparator is powered-up, higher Sleep currents than shown in the power-down current specification will occur. Each comparator that is operational will consume additional current as shown in the comparator specifications. To minimize power consumption while in Sleep mode, turn off the comparators, CM<2:0> = 111, before entering Sleep. If the device wakes up from Sleep, the contents of the CMCON register are not affected.

10.8 Effects of a Reset

A device Reset forces the CMCON register to its Reset state. This forces the Comparator module to be in the comparator Reset mode, CM<2:0> = 000. This ensures that all potential inputs are analog inputs. Device current is minimized when analog inputs are present at Reset time. The comparators will be powered-down during the Reset interval.

10.9 Analog Input Connection Considerations

A simplified circuit for an analog input is shown in Figure 10-4. Since the analog pins are connected to a digital output, they have reverse biased diodes to V_{DD} and V_{SS}. The analog input therefore, must be between V_{SS} and V_{DD}. If the input voltage deviates from this range by more than 0.6V in either direction, one of the diodes is forward biased and a latch-up may occur. A maximum source impedance of 10 kΩ is recommended for the analog sources. Any external component connected to an analog input pin, such as a capacitor or a Zener diode, should have very little leakage current.

FIGURE 10-4: ANALOG INPUT MODE

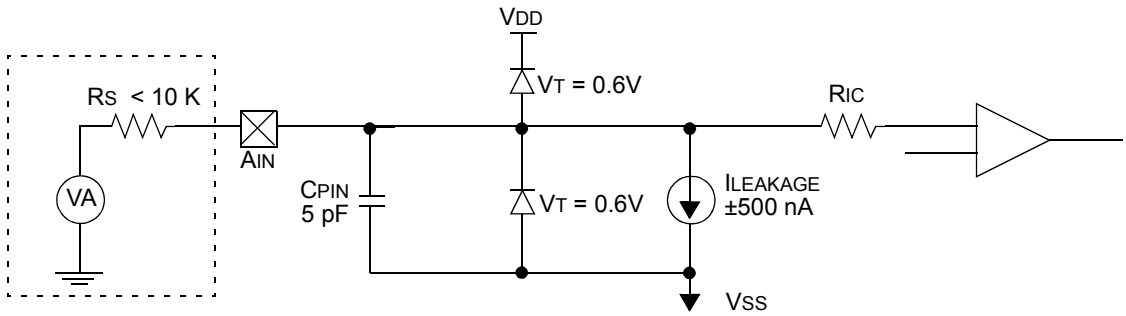

Legend:

CPIN	=	Input Capacitance
VT	=	Threshold Voltage
ILEAKAGE	=	Leakage Current at the Pin
RIC	=	Interconnect Resistance
RS	=	Source Impedance
VA	=	Analog Voltage

TABLE 10-1: REGISTERS ASSOCIATED WITH COMPARATOR MODULE

Address	Name	Bit 7	Bit 6	Bit 5	Bit 4	Bit 3	Bit 2	Bit 1	Bit 0	Value on POR	Value on All Other Resets
1Fh	CMCON	C2OUT	C1OUT	C2INV	C1NV	CIS	CM2	CM1	CM0	0000 0000	0000 0000
0Bh, 8Bh, 10Bh, 18Bh	INTCON	GIE	PEIE	T0IE	INTE	RBIE	T0IF	INTF	RBIF	0000 000x	0000 000u
0Ch	PIR1	EEIF	CMIF	RCIF	TXIF	—	CCP1IF	TMR2IF	TMR1IF	0000 -000	0000 -000
8Ch	PIE1	EEIE	CMIE	RCIE	TXIE	—	CCP1IE	TMR2IE	TMR1IE	0000 -000	0000 -000
85h	TRISA	TRISA7	TRISA6	TRISA5	TRISA4	TRISA3	TRISA2	TRISA1	TRISA0	1111 1111	1111 1111

Legend: x = Unknown, u = Unchanged, - = Unimplemented, read as '0'

© 2009 Microchip Technology Inc.

11.0 VOLTAGE REFERENCE MODULE

The Voltage Reference module consists of a 16-tap resistor ladder network that provides a selectable voltage reference. The resistor ladder is segmented to provide two ranges of VREF values and has a power-down function to conserve power when the reference is not being used. The VRCON register controls the operation of the reference as shown in Figure 11-1. The block diagram is given in Figure 11-1.

11.1 Voltage Reference Configuration

The Voltage Reference module can output 16 distinct voltage levels for each range.

The equations used to calculate the output of the Voltage Reference module are as follows:

if VRR = 1:

$$V_{REF} = \frac{V_R<3:0>}{24} \times V_{DD}$$

if VRR = 0:

$$V_{REF} = \left(V_{DD} \times \frac{1}{4}\right) + \frac{V_R<3:0>}{32} \times V_{DD}$$

The setting time of the Voltage Reference module must be considered when changing the VREF output (Table 17-3). Example 11-1 demonstrates how voltage reference is configured for an output voltage of 1.25V with VDD = 5.0V.

REGISTER 11-1: VRCON – VOLTAGE REFERENCE CONTROL REGISTER (ADDRESS: 9Fh)

R/W-0	R/W-0	R/W-0	U-0	R/W-0	R/W-0	R/W-0	R/W-0
VREN	VROE	VRR	—	VR3	VR2	VR1	VR0
bit 7							bit 0

bit 7 **VREN**: VREF Enable bit
1 = VREF circuit powered on
0 = VREF circuit powered down, no IDD drain

bit 6 **VROE**: VREF Output Enable bit
1 = VREF is output on RA2 pin
0 = VREF is disconnected from RA2 pin

bit 5 **VRR**: VREF Range Selection bit
1 = Low range
0 = High range

bit 4 **Unimplemented**: Read as '0'

bit 3-0 **VR<3:0>**: VREF Value Selection bits 0 ≤ VR <3:0> ≤ 15
When VRR = 1: VREF = (VR<3:0>/ 24) * VDD
When VRR = 0: VREF = 1/4 * VDD + (VR<3:0>/ 32) * VDD

Legend:			
R = Readable bit	W = Writable bit	U = Unimplemented bit, read as '0'	
-n = Value at POR	'1' = Bit is set	'0' = Bit is cleared	x = Bit is unknown

FIGURE 11-1: VOLTAGE REFERENCE BLOCK DIAGRAM

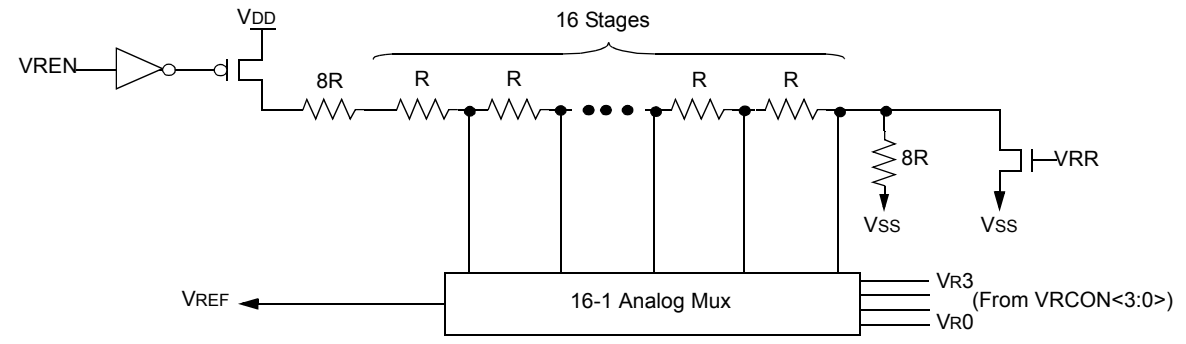

Note: R is defined in Table 17-3.

EXAMPLE 11-1: VOLTAGE REFERENCE CONFIGURATION

```
MOVLW   0x02        ;4 Inputs Muxed
MOVWF   CMCON       ;to 2 comps.
BSF     STATUS,RP0  ;go to Bank 1
MOVLW   0x07        ;RA3-RA0 are
MOVWF   TRISA       ;outputs
MOVLW   0xA6        ;enable VREF
MOVWF   VRCON       ;low range set VR<3:0>=6
BCF     STATUS,RP0  ;go to Bank 0
CALL    DELAY10     ;10µs delay
```

11.2 Voltage Reference Accuracy/Error

The full range of VSS to VDD cannot be realized due to the construction of the module. The transistors on the top and bottom of the resistor ladder network (Figure 11-1) keep VREF from approaching VSS or VDD. The Voltage Reference module is VDD derived and therefore, the VREF output changes with fluctuations in VDD. The tested absolute accuracy of the Voltage Reference module can be found in Table 17-3.

11.3 Operation During Sleep

When the device wakes up from Sleep through an interrupt or a Watchdog Timer time out, the contents of the VRCON register are not affected. To minimize current consumption in Sleep mode, the Voltage Reference module should be disabled.

11.4 Effects of a Reset

A device Reset disables the Voltage Reference module by clearing bit VREN (VRCON<7>). This Reset also disconnects the reference from the RA2 pin by clearing bit VROE (VRCON<6>) and selects the high voltage range by clearing bit VRR (VRCON<5>). The VREF value select bits, VRCON<3:0>, are also cleared.

11.5 Connection Considerations

The Voltage Reference module operates independently of the Comparator module. The output of the reference generator may be connected to the RA2 pin if the TRISA<2> bit is set and the VROE bit, VRCON<6>, is set. Enabling the Voltage Reference module output onto the RA2 pin with an input signal present will increase current consumption. Connecting RA2 as a digital output with VREF enabled will also increase current consumption.

The RA2 pin can be used as a simple D/A output with limited drive capability. Due to the limited drive capability, a buffer must be used in conjunction with the Voltage Reference module output for external connections to VREF. Figure 11-2 shows an example buffering technique.

© 2009 Microchip Technology Inc.

FIGURE 11-2: VOLTAGE REFERENCE OUTPUT BUFFER EXAMPLE

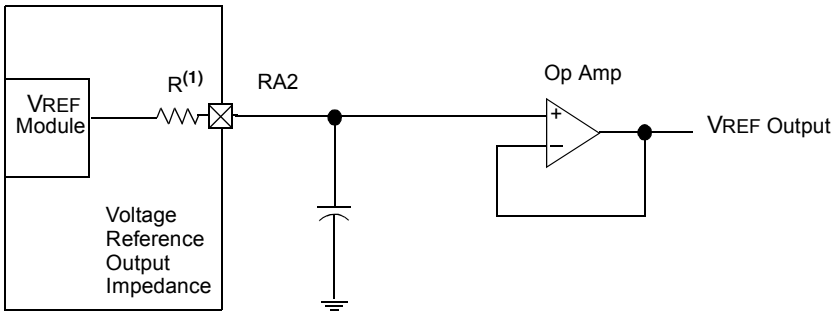

Note 1: R is dependent upon the voltage reference configuration VRCON<3:0> and VRCON<5>.

TABLE 11-1: REGISTERS ASSOCIATED WITH VOLTAGE REFERENCE

Address	Name	Bit 7	Bit 6	Bit 5	Bit 4	Bit 3	Bit 2	Bit 1	Bit 0	Value On POR	Value On All Other Resets
9Fh	VRCON	VREN	VROE	VRR	—	VR3	VR2	VR1	VR0	000- 0000	000- 0000
1Fh	CMCON	C2OUT	C1OUT	C2INV	C1INV	CIS	CM2	CM1	CM0	0000 0000	0000 0000
85h	TRISA	TRISA7	TRISA6	TRISA5	TRISA4	TRISA3	TRISA2	TRISA1	TRISA0	1111 1111	1111 1111

Legend: – = Unimplemented, read as '0'.

NOTES:

© 2009 Microchip Technology Inc.

12.0 UNIVERSAL SYNCHRONOUS ASYNCHRONOUS RECEIVER TRANSMITTER (USART) MODULE

The Universal Synchronous Asynchronous Receiver Transmitter (USART) is also known as a Serial Communications Interface (SCI). The USART can be configured as a full-duplex asynchronous system that can communicate with peripheral devices such as CRT terminals and personal computers, or it can be configured as a half-duplex synchronous system that can communicate with peripheral devices such as A/D or D/A integrated circuits, Serial EEPROMs, etc.

The USART can be configured in the following modes:

- Asynchronous (full-duplex)
- Synchronous – Master (half-duplex)
- Synchronous – Slave (half-duplex)

Bit SPEN (RCSTA<7>) and bits TRISB<2:1> have to be set in order to configure pins RB2/TX/CK and RB1/RX/DT as the Universal Synchronous Asynchronous Receiver Transmitter.

Register 12-1 shows the Transmit Status and Control Register (TXSTA) and Register 12-2 shows the Receive Status and Control Register (RCSTA).

REGISTER 12-1: TXSTA – TRANSMIT STATUS AND CONTROL REGISTER (ADDRESS: 98h)

R/W-0	R/W-0	R/W-0	R/W-0	U-0	R/W-0	R-1	R/W-0
CSRC	TX9	TXEN	SYNC	—	BRGH	TRMT	TX9D
bit 7							bit 0

bit 7 **CSRC**: Clock Source Select bit
Asynchronous mode
Don't care
Synchronous mode
1 = Master mode (Clock generated internally from BRG)
0 = Slave mode (Clock from external source)

bit 6 **TX9**: 9-bit Transmit Enable bit
1 = Selects 9-bit transmission
0 = Selects 8-bit transmission

bit 5 **TXEN**: Transmit Enable bit(1)
1 = Transmit enabled
0 = Transmit disabled

bit 4 **SYNC**: USART Mode Select bit
1 = Synchronous mode
0 = Asynchronous mode

bit 3 **Unimplemented**: Read as '0'

bit 2 **BRGH**: High Baud Rate Select bit
Asynchronous mode
1 = High speed
0 = Low speed
Synchronous mode
Unused in this mode

bit 1 **TRMT**: Transmit Shift Register Status bit
1 = TSR empty
0 = TSR full

bit 0 **TX9D**: 9th bit of transmit data. Can be parity bit.

Note 1: SREN/CREN overrides TXEN in SYNC mode.

Legend:			
R = Readable bit	W = Writable bit	U = Unimplemented bit, read as '0'	
-n = Value at POR	'1' = Bit is set	'0' = Bit is cleared	x = Bit is unknown

REGISTER 12-2: RCSTA – RECEIVE STATUS AND CONTROL REGISTER (ADDRESS: 18h)

R/W-0	R/W-0	R/W-0	R/W-0	R/W-0	R-0	R-0	R-x
SPEN	RX9	SREN	CREN	ADEN	FERR	OERR	RX9D
bit 7							bit 0

bit 7 **SPEN**: Serial Port Enable bit
(Configures RB1/RX/DT and RB2/TX/CK pins as serial port pins when bits TRISB<2:1> are set)
1 = Serial port enabled
0 = Serial port disabled

bit 6 **RX9**: 9-bit Receive Enable bit
1 = Selects 9-bit reception
0 = Selects 8-bit reception

bit 5 **SREN**: Single Receive Enable bit
Asynchronous mode:
Don't care
Synchronous mode - master:
1 = Enables single receive
0 = Disables single receive
This bit is cleared after reception is complete.
Synchronous mode - slave:
Unused in this mode

bit 4 **CREN**: Continuous Receive Enable bit
Asynchronous mode:
1 = Enables continuous receive
0 = Disables continuous receive
Synchronous mode:
1 = Enables continuous receive until enable bit CREN is cleared (CREN overrides SREN)
0 = Disables continuous receive

bit 3 **ADEN**: Address Detect Enable bit
Asynchronous mode 9-bit (RX9 = 1):
1 = Enables address detection, enable interrupt and load of the receive buffer when RSR<8> is set
0 = Disables address detection, all bytes are received, and ninth bit can be used as parity bit
Asynchronous mode 8-bit (RX9 = 0):
Unused in this mode
Synchronous mode
Unused in this mode

bit 2 **FERR**: Framing Error bit
1 = Framing error (Can be updated by reading RCREG register and receive next valid byte)
0 = No framing error

bit 1 **OERR**: Overrun Error bit
1 = Overrun error (Can be cleared by clearing bit CREN)
0 = No overrun error

bit 0 **RX9D**: 9th bit of received data (Can be parity bit)

Legend:			
R = Readable bit	W = Writable bit	U = Unimplemented bit, read as '0'	
-n = Value at POR	'1' = Bit is set	'0' = Bit is cleared	x = Bit is unknown

© 2009 Microchip Technology Inc.

12.1 USART Baud Rate Generator (BRG)

The BRG supports both the Asynchronous and Synchronous modes of the USART. It is a dedicated 8-bit baud rate generator. The SPBRG register controls the period of a free running 8-bit timer. In Asynchronous mode, bit BRGH (TXSTA<2>) also controls the baud rate. In Synchronous mode, bit BRGH is ignored. Table 12-1 shows the formula for computation of the baud rate for different USART modes, which only apply in Master mode (internal clock).

Given the desired baud rate and FOSC, the nearest integer value for the SPBRG register can be calculated using the formula in Table 12-1. From this, the error in baud rate can be determined.

Example 12-1 shows the calculation of the baud rate error for the following conditions:

FOSC = 16 MHz

Desired Baud Rate = 9600

BRGH = 0

SYNC = 0

EQUATION 12-1: CALCULATING BAUD RATE ERROR

$$Desired\ Baud\ Rate = \frac{Fosc}{64(x+1)}$$

$$9600 = \frac{16000000}{64(x+1)}$$

$$x = 25.042$$

$$Calculated\ Baud\ Rate = \frac{16000000}{64(25+1)} = 9615$$

$$Error = \frac{(Calculated\ Baud\ Rate - Desired\ Baud\ Rate)}{Desired\ Baud\ Rate}$$

$$= \frac{9615 - 9600}{9600} = 0.16\%$$

It may be advantageous to use the high baud rate (BRGH = 1) even for slower baud clocks. This is because the FOSC/(16(X + 1)) equation can reduce the baud rate error in some cases.

Writing a new value to the SPBRG register causes the BRG timer to be reset (or cleared) and ensures the BRG does not wait for a timer overflow before outputting the new baud rate.

The data on the RB1/RX/DT pin is sampled three times by a majority detect circuit to determine if a high or a low level is present at the RX pin.

TABLE 12-1: BAUD RATE FORMULA

SYNC	BRGH = 0 (Low Speed)	BRGH = 1 (High Speed)
0	(Asynchronous) Baud Rate = FOSC/(64(X+1))	Baud Rate = FOSC/(16(X+1))
1	(Synchronous) Baud Rate = FOSC/(4(X+1))	NA

Legend: X = value in SPBRG (0 to 255)

TABLE 12-2: REGISTERS ASSOCIATED WITH BAUD RATE GENERATOR

Address	Name	Bit 7	Bit 6	Bit 5	Bit 4	Bit 3	Bit 2	Bit 1	Bit 0	Value on POR	Value on all other Resets
98h	TXSTA	CSRC	TX9	TXEN	SYNC	—	BRGH	TRMT	TX9D	0000 -010	0000 -010
18h	RCSTA	SPEN	RX9	SREN	CREN	ADEN	FERR	OERR	RX9D	0000 000x	0000 000x
99h	SPBRG	Baud Rate Generator Register								0000 0000	0000 0000

Legend: x = unknown, - = unimplemented read as '0'. Shaded cells are not used for the BRG.

TABLE 12-3: BAUD RATES FOR SYNCHRONOUS MODE

BAUD RATE (K)	FOSC = 20 MHz		SPBRG value (decimal)	16 MHz		SPBRG value (decimal)	10 MHz		SPBRG value (decimal)
	KBAUD	ERROR		KBAUD	ERROR		KBAUD	ERROR	
0.3	NA	—	—	NA	—	—	NA	—	—
1.2	NA	—	—	NA	—	—	NA	—	—
2.4	NA	—	—	NA	—	—	NA	—	—
9.6	NA	—	—	NA	—	—	9.766	+1.73%	255
19.2	19.53	+1.73%	255	19.23	+0.16%	207	19.23	+0.16%	129
76.8	76.92	+0.16%	64	76.92	+0.16%	51	75.76	-1.36%	32
96	96.15	+0.16%	51	95.24	-0.79%	41	96.15	+0.16%	25
300	294.1	-1.96	16	307.69	+2.56%	12	312.5	+4.17%	7
500	500	0	9	500	0	7	500	0	4
HIGH	5000	—	0	4000	—	0	2500	—	0
LOW	19.53	—	255	15.625	—	255	9.766	—	255

BAUD RATE (K)	FOSC = 7.15909 MHz		SPBRG value (decimal)	5.0688 MHz		SPBRG value (decimal)	4 MHz		SPBRG value (decimal)
	KBAUD	ERROR		KBAUD	ERROR		KBAUD	ERROR	
0.3	NA	—	—	NA	—	—	NA	—	—
1.2	NA	—	—	NA	—	—	NA	—	—
2.4	NA	—	—	NA	—	—	NA	—	—
9.6	9.622	+0.23%	185	9.6	0	131	9.615	+0.16%	103
19.2	19.24	+0.23%	92	19.2	0	65	19.231	+0.16%	51
76.8	77.82	+1.32	22	79.2	+3.13%	15	75.923	+0.16%	12
96	94.20	-1.88	18	97.48	+1.54%	12	1000	+4.17%	9
300	298.3	-0.57	5	316.8	5.60%	3	NA	—	—
500	NA	—	—	NA	—	—	NA	—	—
HIGH	1789.8	—	0	1267	—	0	100	—	0
LOW	6.991	—	255	4.950	—	255	3.906	—	255

BAUD RATE (K)	FOSC = 3.579545 MHz		SPBRG value (decimal)	1 MHz		SPBRG value (decimal)	32.768 kHz		SPBRG value (decimal)
	KBAUD	ERROR		KBAUD	ERROR		KBAUD	ERROR	
0.3	NA	—	—	NA	—	—	0.303	+1.14%	26
1.2	NA	—	—	1.202	+0.16%	207	1.170	-2.48%	6
2.4	NA	—	—	2.404	+0.16%	103	NA	—	—
9.6	9.622	+0.23%	92	9.615	+0.16%	25	NA	—	—
19.2	19.04	-0.83%	46	19.24	+0.16%	12	NA	—	—
76.8	74.57	-2.90%	11	83.34	+8.51%	2	NA	—	—
96	99.43	+3.57%	8	NA	—	—	NA	—	—
300	298.3	0.57%	2	NA	—	—	NA	—	—
500	NA	—	—	NA	—	—	NA	—	—
HIGH	894.9	—	0	250	—	0	8.192	—	0
LOW	3.496	—	255	0.9766	—	255	0.032	—	255

© 2009 Microchip Technology Inc.

TABLE 12-4: BAUD RATES FOR ASYNCHRONOUS MODE (BRGH = 0)

BAUD RATE (K)	FOSC = 20 MHz		SPBRG value (decimal)	16 MHz		SPBRG value (decimal)	10 MHz		SPBRG value (decimal)
	KBAUD	ERROR		KBAUD	ERROR		KBAUD	ERROR	
0.3	NA	—	—	NA	—	—	NA	—	—
1.2	1.221	+1.73%	255	1.202	+0.16%	207	1.202	+0.16%	129
2.4	2.404	+0.16%	129	2.404	+0.16%	103	2.404	+0.16%	64
9.6	9.469	-1.36%	32	9.615	+0.16%	25	9.766	+1.73%	15
19.2	19.53	+1.73%	15	19.23	+0.16%	12	19.53	+1.73V	7
76.8	78.13	+1.73%	3	83.33	+8.51%	2	78.13	+1.73%	1
96	104.2	+8.51%	2	NA	—	—	NA	—	—
300	312.5	+4.17%	0	NA	—	—	NA	—	—
500	NA	—	—	NA	—	—	NA	—	—
HIGH	312.5	—	0	250	—	0	156.3	—	0
LOW	1.221	—	255	0.977	—	255	0.6104	—	255

BAUD RATE (K)	FOSC = 7.15909 MHz		SPBRG value (decimal)	5.0688 MHz		SPBRG value (decimal)	4 MHz		SPBRG value (decimal)
	KBAUD	ERROR		KBAUD	ERROR		KBAUD	ERROR	
0.3	NA	—	—	0.31	+3.13%	255	0.3005	-0.17%	207
1.2	1.203	+0.23%	92	1.2	0	65	1.202	+1.67%	51
2.4	2.380	-0.83%	46	2.4	0	32	2.404	+1.67%	25
9.6	9.322	-2.90%	11	9.9	+3.13%	7	NA	—	—
19.2	18.64	-2.90%	5	19.8	+3.13%	3	NA	—	—
76.8	NA	—	—	79.2	+3.13%	0	NA	—	—
96	NA	—	—	NA	—	—	NA	—	—
300	NA	—	—	NA	—	—	NA	—	—
500	NA	—	—	NA	—	—	NA	—	—
HIGH	111.9	—	0	79.2	—	0	62.500	—	0
LOW	0.437	—	255	0.3094	—	255	3.906	—	255

BAUD RATE (K)	FOSC = 3.579545 MHz		SPBRG value (decimal)	1 MHz		SPBRG value (decimal)	32.768 kHz		SPBRG value (decimal)
	KBAUD	ERROR		KBAUD	ERROR		KBAUD	ERROR	
0.3	0.301	+0.23%	185	0.300	+0.16%	51	0.256	-14.67%	1
1.2	1.190	-0.83%	46	1.202	+0.16%	12	NA	—	—
2.4	2.432	+1.32%	22	2.232	-6.99%	6	NA	—	—
9.6	9.322	-2.90%	5	NA	—	—	NA	—	—
19.2	18.64	-2.90%	2	NA	—	—	NA	—	—
76.8	NA	—	—	NA	—	—	NA	—	—
96	NA	—	—	NA	—	—	NA	—	—
300	NA	—	—	NA	—	—	NA	—	—
500	NA	—	—	NA	—	—	NA	—	—
HIGH	55.93	—	0	15.63	—	0	0.512	—	0
LOW	0.2185	—	255	0.0610	—	255	0.0020	—	255

TABLE 12-5: BAUD RATES FOR ASYNCHRONOUS MODE (BRGH = 1)

BAUD RATE (K)	FOSC = 20 MHz		SPBRG value (decimal)	16 MHz		SPBRG value (decimal)	10 MHz		SPBRG value (decimal)
	KBAUD	ERROR		KBAUD	ERROR		KBAUD	ERROR	
9600	9.615	+0.16%	129	9.615	+0.16%	103	9.615	+0.16%	64
19200	19.230	+0.16%	64	19.230	+0.16%	51	18.939	-1.36%	32
38400	37.878	-1.36%	32	38.461	+0.16%	25	39.062	+1.7%	15
57600	56.818	-1.36%	21	58.823	+2.12%	16	56.818	-1.36%	10
115200	113.636	-1.36%	10	111.111	-3.55%	8	125	+8.51%	4
250000	250	0	4	250	0	3	NA	—	—
625000	625	0	1	NA	—	—	625	0	0
1250000	1250	0	0	NA	—	—	NA	—	—

BAUD RATE (K)	FOSC = 7.16 MHz		SPBRG value (decimal)	5.068 MHz		SPBRG value (decimal)	4 MHz		SPBRG value (decimal)
	KBAUD	ERROR		KBAUD	ERROR		KBAUD	ERROR	
9600	9.520	-0.83%	46	9598.485	0.016%	32	9615.385	0.160%	25
19200	19.454	+1.32%	22	18632.35	-2.956%	16	19230.77	0.160%	12
38400	37.286	-2.90%	11	39593.75	3.109%	7	35714.29	-6.994%	6
57600	55.930	-2.90%	7	52791.67	-8.348%	5	62500	8.507%	3
115200	111.860	-2.90%	3	105583.3	-8.348%	2	125000	8.507%	1
250000	NA	—	—	316750	26.700%	0	250000	0.000%	0
625000	NA	—	—	NA	—	—	NA	—	—
1250000	NA	—	—	NA	—	—	NA	—	—

BAUD RATE (K)	FOSC = 3.579 MHz		SPBRG value (decimal)	1 MHz		SPBRG value (decimal)	32.768 kHz		SPBRG value (decimal)
	KBAUD	ERROR		KBAUD	ERROR		KBAUD	ERROR	
9600	9725.543	1.308%	22	8.928	-6.994%	6	NA	NA	NA
19200	18640.63	-2.913%	11	20833.3	8.507%	2	NA	NA	NA
38400	37281.25	-2.913%	5	31250	-18.620%	1	NA	NA	NA
57600	55921.88	-2.913%	3	62500	+8.507	0	NA	NA	NA
115200	111243.8	-2.913%	1	NA	—	—	NA	NA	NA
250000	223687.5	-10.525%	0	NA	—	—	NA	NA	NA
625000	NA	—	—	NA	—	—	NA	NA	NA
1250000	NA	—	—	NA	—	—	NA	NA	NA

© 2009 Microchip Technology Inc.

12.2 USART Asynchronous Mode

In this mode, the USART uses standard non-return-to-zero (NRZ) format (one Start bit, eight or nine data bits and one Stop bit). The most common data format is 8-bit. A dedicated 8-bit baud rate generator is used to derive baud rate frequencies from the oscillator. The USART transmits and receives the LSb first. The USART's transmitter and receiver are functionally independent, but use the same data format and baud rate. The baud rate generator produces a clock either x16 or x64 of the bit shift rate, depending on bit BRGH (TXSTA<2>). Parity is not supported by the hardware, but can be implemented in software (and stored as the ninth data bit). Asynchronous mode is stopped during Sleep.

Asynchronous mode is selected by clearing bit SYNC (TXSTA<4>).

The USART Asynchronous module consists of the following important elements:

- Baud Rate Generator
- Sampling Circuit
- Asynchronous Transmitter
- Asynchronous Receiver

12.2.1 USART ASYNCHRONOUS TRANSMITTER

The USART transmitter block diagram is shown in Figure 12-1. The heart of the transmitter is the Transmit (serial) Shift Register (TSR). The shift register obtains its data from the read/write transmit buffer, TXREG. The TXREG register is loaded with data in software. The TSR register is not loaded until the Stop bit has been transmitted from the previous load. As soon as the Stop bit is transmitted, the TSR is loaded with new data from the TXREG register (if available). Once the TXREG register transfers the data to the TSR register (occurs in one T_{CY}), the TXREG register is empty and flag bit TXIF (PIR1<4>) is set. This interrupt can be enabled/disabled by setting/clearing enable bit TXIE (PIE1<4>). Flag bit TXIF will be set regardless of the state of enable bit TXIE and cannot be cleared in software. It will reset only when new data is loaded into the TXREG register. While flag bit TXIF indicated the status of the TXREG register, another bit TRMT (TXSTA<1>) shows the status of the TSR register. Status bit TRMT is a read-only bit which is set when the TSR register is empty. No interrupt logic is tied to this bit, so the user has to poll this bit in order to determine if the TSR register is empty.

Note 1:	The TSR register is not mapped in data memory so it is not available to the user.
2:	Flag bit TXIF is set when enable bit TXEN is set.

Transmission is enabled by setting enable bit TXEN (TXSTA<5>). The actual transmission will not occur until the TXREG register has been loaded with data and the Baud Rate Generator (BRG) has produced a shift clock (Figure 12-1). The transmission can also be started by first loading the TXREG register and then setting enable bit TXEN. Normally when transmission is first started, the TSR register is empty, so a transfer to the TXREG register will result in an immediate transfer to TSR resulting in an empty TXREG. A back-to-back transfer is thus possible (Figure 12-3). Clearing enable bit TXEN during a transmission will cause the transmission to be aborted and will reset the transmitter. As a result the RB2/TX/CK pin will revert to high-impedance.

In order to select 9-bit transmission, transmit bit TX9 (TXSTA<6>) should be set and the ninth bit should be written to TX9D (TXSTA<0>). The ninth bit must be written before writing the 8-bit data to the TXREG register. This is because a data write to the TXREG register can result in an immediate transfer of the data to the TSR register (if the TSR is empty). In such a case, an incorrect ninth data bit may be loaded in the TSR register.

FIGURE 12-1: USART TRANSMIT BLOCK DIAGRAM

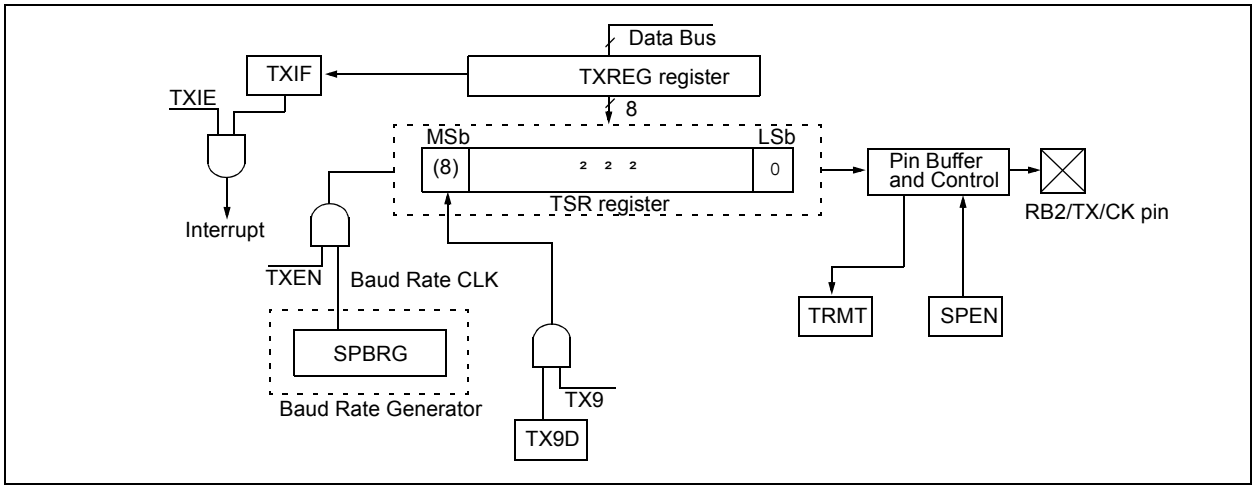

Follow these steps when setting up an Asynchronous Transmission:

1. TRISB<1> and TRISB<2> should both be set to '1' to configure the RB1/RX/DT and RB2/TX/CK pins as inputs. Output drive, when required, is controlled by the peripheral circuitry.
2. Initialize the SPBRG register for the appropriate baud rate. If a high-speed baud rate is desired, set bit BRGH. (**Section 12.1 "USART Baud Rate Generator (BRG)"**).
3. Enable the asynchronous serial port by clearing bit SYNC and setting bit SPEN.
4. If interrupts are desired, then set enable bit TXIE.
5. If 9-bit transmission is desired, then set transmit bit TX9.
6. Enable the transmission by setting bit TXEN, which will also set bit TXIF.
7. If 9-bit transmission is selected, the ninth bit should be loaded in bit TX9D.
8. Load data to the TXREG register (starts transmission).

FIGURE 12-2: ASYNCHRONOUS TRANSMISSION

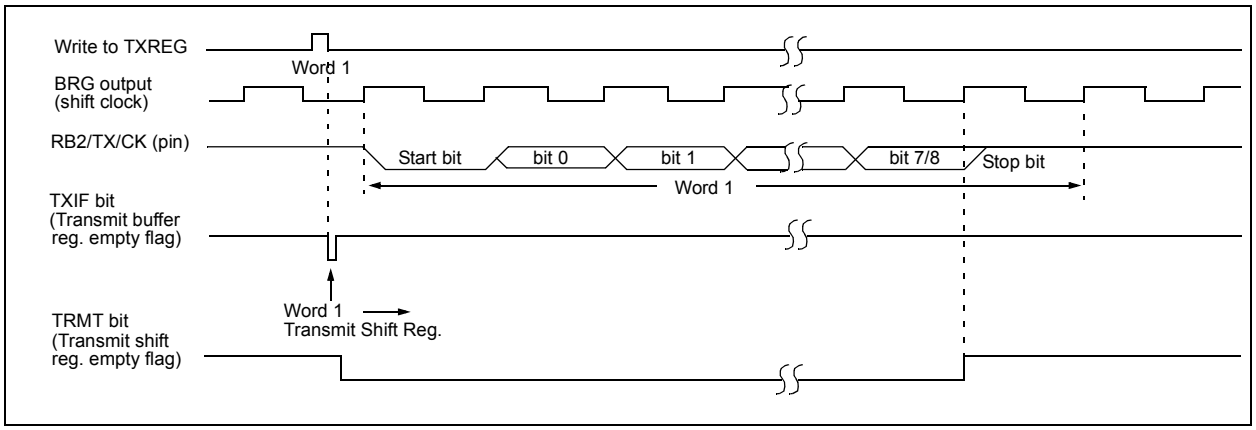

© 2009 Microchip Technology Inc.

FIGURE 12-3: ASYNCHRONOUS TRANSMISSION (BACK TO BACK)

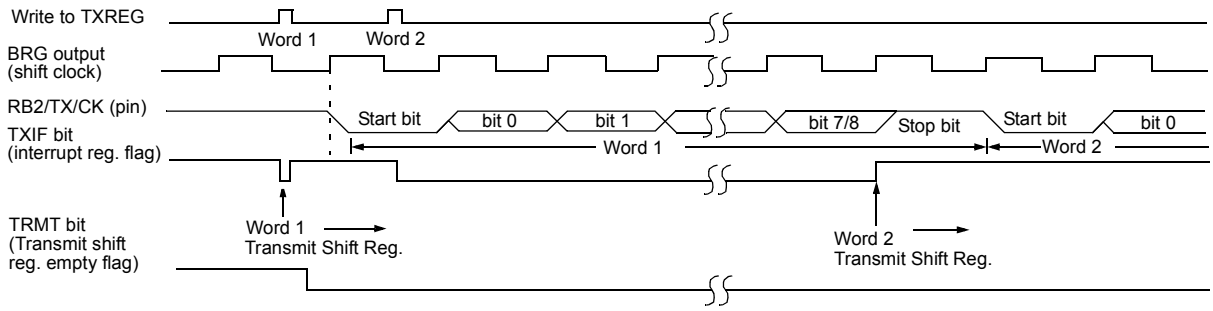

Note: This timing diagram shows two consecutive transmissions.

TABLE 12-6: REGISTERS ASSOCIATED WITH ASYNCHRONOUS TRANSMISSION

Address	Name	Bit 7	Bit 6	Bit 5	Bit 4	Bit 3	Bit 2	Bit 1	Bit 0	Value on POR	Value on all other Resets
0Ch	PIR1	EEIF	CMIF	RCIF	TXIF	—	CCP1IF	TMR2IF	TMR1IF	0000 -000	0000 -000
18h	RCSTA	SPEN	RX9	SREN	CREN	ADEN	FERR	OERR	RX9D	0000 000x	0000 000x
19h	TXREG	USART Transmit Data Register								0000 0000	0000 0000
8Ch	PIE1	EEIE	CMIE	RCIE	TXIE	—	CCP1IE	TMR2IE	TMR1IE	0000 -000	0000 -000
98h	TXSTA	CSRC	TX9	TXEN	SYNC	—	BRGH	TRMT	TX9D	0000 -010	0000 -010
99h	SPBRG	Baud Rate Generator Register								0000 0000	0000 0000

Legend: x = unknown, - = unimplemented locations read as '0'.
Shaded cells are not used for Asynchronous Transmission.

12.2.2 USART ASYNCHRONOUS RECEIVER

The receiver block diagram is shown in Figure 12-4. The data is received on the RB1/RX/DT pin and drives the data recovery block. The data recovery block is actually a high-speed shifter operating at x16 times the baud rate, whereas the main receive serial shifter operates at the bit rate or at FOSC.

When Asynchronous mode is selected, reception is enabled by setting bit CREN (RCSTA<4>).

The heart of the receiver is the Receive (serial) Shift Register (RSR). After sampling the Stop bit, the received data in the RSR is transferred to the RCREG register (if it is empty). If the transfer is complete, flag bit RCIF (PIR1<5>) is set. The actual interrupt can be enabled/disabled by setting/clearing enable bit RCIE (PIE1<5>). Flag bit RCIF is a read-only bit, which is cleared by the hardware. It is cleared when the RCREG register has been read and is empty. The RCREG is a double buffered register (i.e., it is a two-deep FIFO). It is possible for two bytes of data to be received and transferred to the RCREG FIFO and a third byte begin shifting to the RSR register. On the detection of the Stop bit of the third byte, if the RCREG register is still full, then overrun error bit OERR (RCSTA<1>) will be set. The word in the RSR will be lost. The RCREG register can be read twice to retrieve the two bytes in the FIFO. Overrun bit OERR has to be cleared in software. This is done by resetting the receive logic (CREN is cleared and then set). If bit OERR is set, transfers from the RSR register to the RCREG register are inhibited, so it is essential to clear error bit OERR if it is set. Framing error bit FERR (RCSTA<2>) is set if a Stop bit is detected as clear. Bit FERR and the 9th receive bit are buffered the same way as the receive data. Reading the RCREG, will load bits RX9D and FERR with new values, therefore it is essential for the user to read the RCSTA register before reading RCREG register in order not to lose the old FERR and RX9D information.

FIGURE 12-4: USART RECEIVE BLOCK DIAGRAM

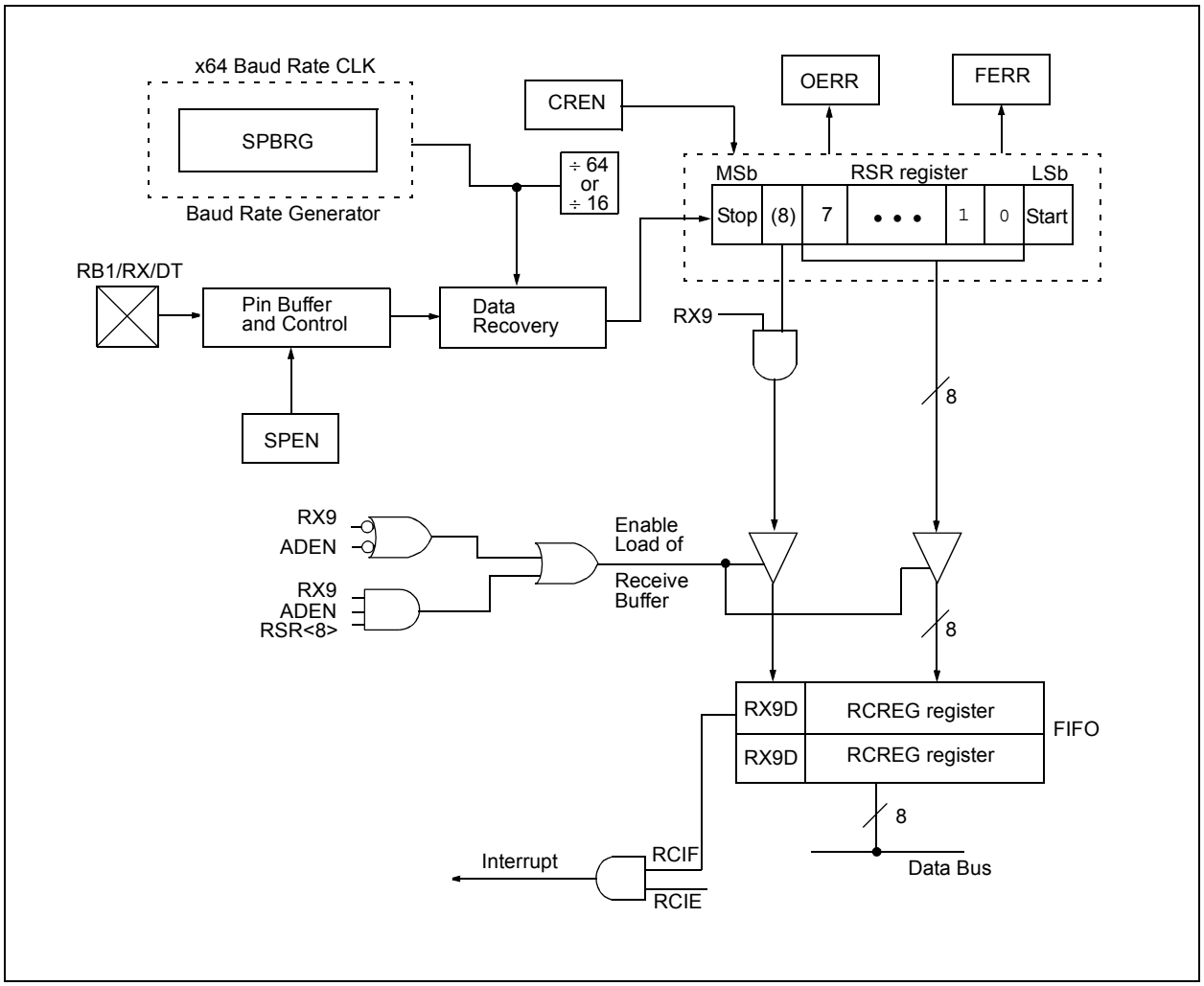

© 2009 Microchip Technology Inc.

FIGURE 12-5: ASYNCHRONOUS RECEPTION WITH ADDRESS DETECT

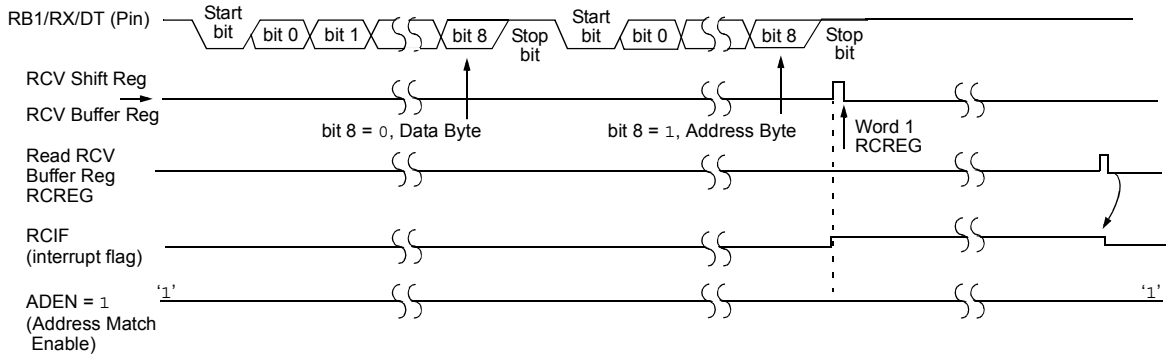

Note: This timing diagram shows a data byte followed by an address byte. The data byte is not read into the RCREG (Receive Buffer) because ADEN = 1 and bit 8 = 0.

FIGURE 12-6: ASYNCHRONOUS RECEPTION WITH ADDRESS BYTE FIRST

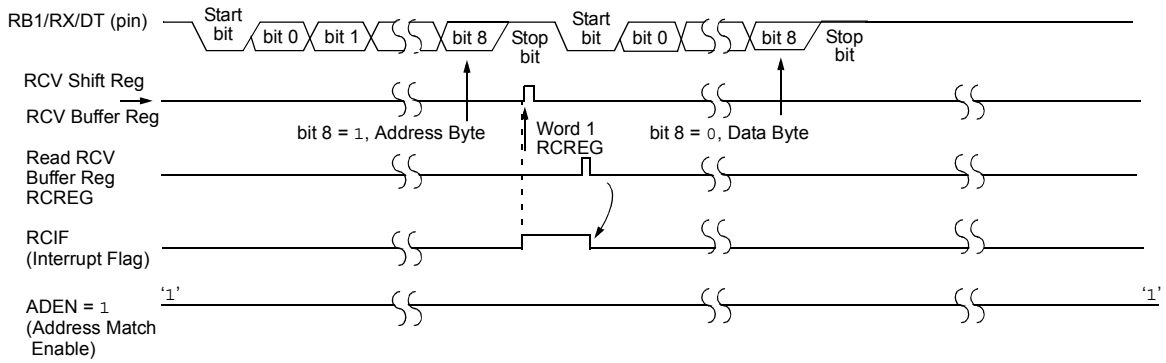

Note: This timing diagram shows an address byte followed by an data byte. The data byte is not read into the RCREG (receive buffer) because ADEN was not updated (still = 1) and bit 8 = 0.

FIGURE 12-7: ASYNCHRONOUS RECEPTION WITH ADDRESS BYTE FIRST FOLLOWED BY VALID DATA BYTE

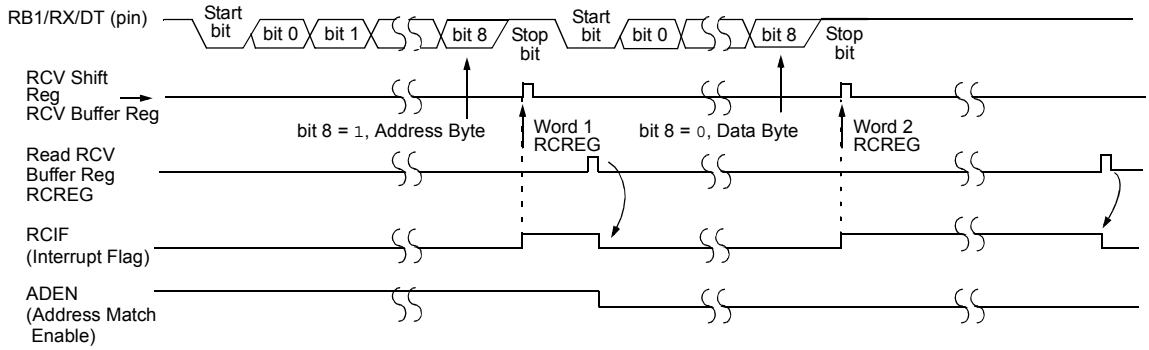

Note: This timing diagram shows an address byte followed by an data byte. The data byte is read into the RCREG (Receive Buffer) because ADEN was updated after an address match, and was cleared to a '0', so the contents of the Receive Shift Register (RSR) are read into the Receive Buffer regardless of the value of bit 8.

Follow these steps when setting up an Asynchronous Reception:

1. TRISB<1> and TRISB<2> should both be set to '1' to configure the RB1/RX/DT and RB2/TX/CK pins as inputs. Output drive, when required, is controlled by the peripheral circuitry.
2. Initialize the SPBRG register for the appropriate baud rate. If a high-speed baud rate is desired, set bit BRGH. (**Section 12.1 "USART Baud Rate Generator (BRG)"**).
3. Enable the asynchronous serial port by clearing bit SYNC and setting bit SPEN.
4. If interrupts are desired, then set enable bit RCIE.
5. If 9-bit reception is desired, then set bit RX9.
6. Enable the reception by setting bit CREN.
7. Flag bit RCIF will be set when reception is complete and an interrupt will be generated if enable bit RCIE was set.
8. Read the RCSTA register to get the ninth bit (if enabled) and determine if any error occurred during reception.
9. Read the 8-bit received data by reading the RCREG register.
10. If an OERR error occurred, clear the error by clearing enable bit CREN.

TABLE 12-7: REGISTERS ASSOCIATED WITH ASYNCHRONOUS RECEPTION

Address	Name	Bit 7	Bit 6	Bit 5	Bit 4	Bit 3	Bit 2	Bit 1	Bit 0	Value on POR	Value on all other Resets
0Ch	PIR1	EEIF	CMIF	RCIF	TXIF	—	CCP1IF	TMR2IF	TMR1IF	0000 -000	0000 -000
18h	RCSTA	SPEN	RX9	SREN	CREN	ADEN	FERR	OERR	RX9D	0000 000x	0000 000x
1Ah	RCREG	USART Receive Data Register								0000 0000	0000 0000
8Ch	PIE1	EEIE	CMIE	RCIE	TXIE	—	CCP1IE	TMR2IE	TMR1IE	0000 -000	0000 -000
98h	TXSTA	CSRC	TX9	TXEN	SYNC	—	BRGH	TRMT	TX9D	0000 -010	0000 -010
99h	SPBRG	Baud Rate Generator Register								0000 0000	0000 0000

Legend: x = unknown, - = unimplemented locations read as '0'. Shaded cells are not used for asynchronous reception.

© 2009 Microchip Technology Inc.

12.3 USART Address Detect Function

12.3.1 USART 9-BIT RECEIVER WITH ADDRESS DETECT

When the RX9 bit is set in the RCSTA register, 9 bits are received and the ninth bit is placed in the RX9D bit of the RCSTA register. The USART module has a special provision for multiprocessor communication. Multiprocessor communication is enabled by setting the ADEN bit (RCSTA<3>) along with the RX9 bit. The port is now programmed such that when the last bit is received, the contents of the Receive Shift Register (RSR) are transferred to the receive buffer, the ninth bit of the RSR (RSR<8>) is transferred to RX9D, and the receive interrupt is set if and only if RSR<8> = 1. This feature can be used in a multiprocessor system as follows:

A master processor intends to transmit a block of data to one of many slaves. It must first send out an address byte that identifies the target slave. An address byte is identified by setting the ninth bit (RSR<8>) to a '1' (instead of a '0' for a data byte). If the ADEN and RX9 bits are set in the slave's RCSTA register, enabling multiprocessor communication, all data bytes will be ignored. However, if the ninth received bit is equal to a '1', indicating that the received byte is an address, the slave will be interrupted and the contents of the RSR register will be transferred into the receive buffer. This allows the slave to be interrupted only by addresses, so that the slave can examine the received byte to see if it is being addressed. The addressed slave will then clear its ADEN bit and prepare to receive data bytes from the master.

When ADEN is enabled (= 1), all data bytes are ignored. Following the Stop bit, the data will not be loaded into the receive buffer, and no interrupt will occur. If another byte is shifted into the RSR register, the previous data byte will be lost.

The ADEN bit will only take effect when the receiver is configured in 9-bit mode (RX9 = 1). When ADEN is disabled (= 0), all data bytes are received and the 9th bit can be used as the parity bit.

The receive block diagram is shown in Figure 12-4.

Reception is enabled by setting bit CREN (RCSTA<4>).

12.3.1.1 Setting up 9-bit mode with Address Detect

Follow these steps when setting up Asynchronous Reception with Address Detect Enabled:

1. TRISB<1> and TRISB<2> should both be set to '1' to configure the RB1/RX/DT and RB2/TX/CK pins as inputs. Output drive, when required, is controlled by the peripheral circuitry.
2. Initialize the SPBRG register for the appropriate baud rate. If a high-speed baud rate is desired, set bit BRGH.
3. Enable asynchronous communication by setting or clearing bit SYNC and setting bit SPEN.
4. If interrupts are desired, then set enable bit RCIE.
5. Set bit RX9 to enable 9-bit reception.
6. Set ADEN to enable address detect.
7. Enable the reception by setting enable bit CREN or SREN.
8. Flag bit RCIF will be set when reception is complete and an interrupt will be generated if enable bit RCIE was set.
9. Read the 8-bit received data by reading the RCREG register to determine if the device is being addressed.
10. If an OERR error occurred, clear the error by clearing enable bit CREN if it was already set.
11. If the device has been addressed (RSR<8> = 1 with address match enabled), clear the ADEN and RCIF bits to allow data bytes and address bytes to be read into the receive buffer and interrupt the CPU.

TABLE 12-8: REGISTERS ASSOCIATED WITH ASYNCHRONOUS RECEPTION

Address	Name	Bit 7	Bit 6	Bit 5	Bit 4	Bit 3	Bit 2	Bit 1	Bit 0	Value on POR	Value on all other Resets
0Ch	PIR1	EEIF	CMIF	RCIF	TXIF	—	CCP1IF	TMR2IF	TMR1IF	0000 -000	0000 -000
18h	RCSTA	SPEN	RX9	SREN	CREN	ADEN	FERR	OERR	RX9D	0000 000x	0000 000x
1Ah	RCREG	USART Receive Data Register								0000 0000	0000 0000
8Ch	PIE1	EEIE	CMIE	RCIE	TXIE	—	CCP1IE	TMR2IE	TMR1IE	0000 -000	0000 -000
98h	TXSTA	CSRC	TX9	TXEN	SYNC	—	BRGH	TRMT	TX9D	0000 -010	0000 -010
99h	SPBRG	Baud Rate Generator Register								0000 0000	0000 0000

Legend: x = unknown, - = unimplemented locations read as '0'. Shaded cells are not used for asynchronous reception.

12.4 USART Synchronous Master Mode

In Synchronous Master mode, the data is transmitted in a half-duplex manner (i.e., transmission and reception do not occur at the same time). When transmitting data, the reception is inhibited and vice versa. Synchronous mode is entered by setting bit SYNC (TXSTA<4>). In addition enable bit SPEN (RCSTA<7>) is set in order to configure the RB2/TX/CK and RB1/RX/DT I/O pins to CK (clock) and DT (data) lines, respectively. The Master mode indicates that the processor transmits the master clock on the CK line. The Master mode is entered by setting bit CSRC (TXSTA<7>).

12.4.1 USART SYNCHRONOUS MASTER TRANSMISSION

The USART transmitter block diagram is shown in Figure 12-1. The heart of the transmitter is the Transmit (serial) Shift Register (TSR). The shift register obtains its data from the read/write transmit buffer register, TXREG. The TXREG register is loaded with data in software. The TSR register is not loaded until the last bit has been transmitted from the previous load. As soon as the last bit is transmitted, the TSR is loaded with new data from the TXREG (if available). Once the TXREG register transfers the data to the TSR register (occurs in one Tcycle), the TXREG is empty and interrupt bit, TXIF (PIR1<4>) is set. The interrupt can be enabled/disabled by setting/clearing enable bit TXIE (PIE1<4>). Flag bit TXIF will be set regardless of the state of enable bit TXIE and cannot be cleared in software. It will reset only when new data is loaded into the TXREG register. While flag bit TXIF indicates the status of the TXREG register, another bit TRMT (TXSTA<1>) shows the status of the TSR register. TRMT is a read-only bit which is set when the TSR is empty. No interrupt logic is tied to this bit, so the user has to poll this bit in order to determine if the TSR register is empty. The TSR is not mapped in data memory so it is not available to the user.

Transmission is enabled by setting enable bit TXEN (TXSTA<5>). The actual transmission will not occur until the TXREG register has been loaded with data. The first data bit will be shifted out on the next available rising edge of the clock on the CK line. Data out is stable around the falling edge of the synchronous clock (Figure 12-8). The transmission can also be started by first loading the TXREG register and then setting bit TXEN (Figure 12-9). This is advantageous when slow baud rates are selected, since the BRG is kept in Reset when bits TXEN, CREN and SREN are clear. Setting enable bit TXEN will start the BRG, creating a shift clock immediately. Normally, when transmission is first started, the TSR register is empty, so a transfer to the TXREG register will result in an immediate transfer to TSR resulting in an empty TXREG. Back-to-back transfers are possible.

Clearing enable bit TXEN during a transmission will cause the transmission to be aborted and will reset the transmitter. The DT and CK pins will revert to high-impedance. If either bit CREN or bit SREN is set during a transmission, the transmission is aborted and the DT pin reverts to a high-impedance state (for a reception). The CK pin will remain an output if bit CSRC is set (internal clock). The transmitter logic however is not reset although it is disconnected from the pins. In order to reset the transmitter, the user has to clear bit TXEN. If bit SREN is set (to interrupt an on-going transmission and receive a single word), then after the single word is received, bit SREN will be cleared and the serial port will revert back to transmitting since bit TXEN is still set. The DT line will immediately switch from high-impedance Receive mode to transmit and start driving. To avoid this, bit TXEN should be cleared.

In order to select 9-bit transmission, the TX9 (TXSTA<6>) bit should be set and the ninth bit should be written to bit TX9D (TXSTA<0>). The ninth bit must be written before writing the 8-bit data to the TXREG register. This is because a data write to the TXREG can result in an immediate transfer of the data to the TSR register (if the TSR is empty). If the TSR was empty and the TXREG was written before writing the “new” TX9D, the “present” value of bit TX9D is loaded.

Follow these steps when setting up a Synchronous Master Transmission:

1. TRISB<1> and TRISB<2> should both be set to ‘1’ to configure the RB1/RX/DT and RB2/TX/CK pins as inputs. Output drive, when required, is controlled by the peripheral circuitry.
2. Initialize the SPBRG register for the appropriate baud rate (**Section 12.1 “USART Baud Rate Generator (BRG)”**).
3. Enable the synchronous master serial port by setting bits SYNC, SPEN and CSRC.
4. If interrupts are desired, then set enable bit TXIE.
5. If 9-bit transmission is desired, then set bit TX9.
6. Enable the transmission by setting bit TXEN.
7. If 9-bit transmission is selected, the ninth bit should be loaded in bit TX9D.
8. Start each transmission by loading data to the TXREG register.

© 2009 Microchip Technology Inc.

TABLE 12-9: REGISTERS ASSOCIATED WITH SYNCHRONOUS MASTER TRANSMISSION

Address	Name	Bit 7	Bit 6	Bit 5	Bit 4	Bit 3	Bit 2	Bit 1	Bit 0	Value on POR	Value on all other Resets
0Ch	PIR1	EEIF	CMIF	RCIF	TXIF	—	CCP1IF	TMR2IF	TMR1IF	0000 -000	0000 -000
18h	RCSTA	SPEN	RX9	SREN	CREN	ADEN	FERR	OERR	RX9D	0000 000x	0000 000x
19h	TXREG	USART Transmit Data Register								0000 0000	0000 0000
8Ch	PIE1	EEIE	CMIE	RCIE	TXIE	—	CCP1IE	TMR2IE	TMR1IE	0000 -000	0000 -000
98h	TXSTA	CSRC	TX9	TXEN	SYNC	—	BRGH	TRMT	TX9D	0000 -010	0000 -010
99h	SPBRG	Baud Rate Generator Register								0000 0000	0000 0000

Legend: x = unknown, - = unimplemented, read as '0'. Shaded cells are not used for synchronous master transmission.

FIGURE 12-8: SYNCHRONOUS TRANSMISSION

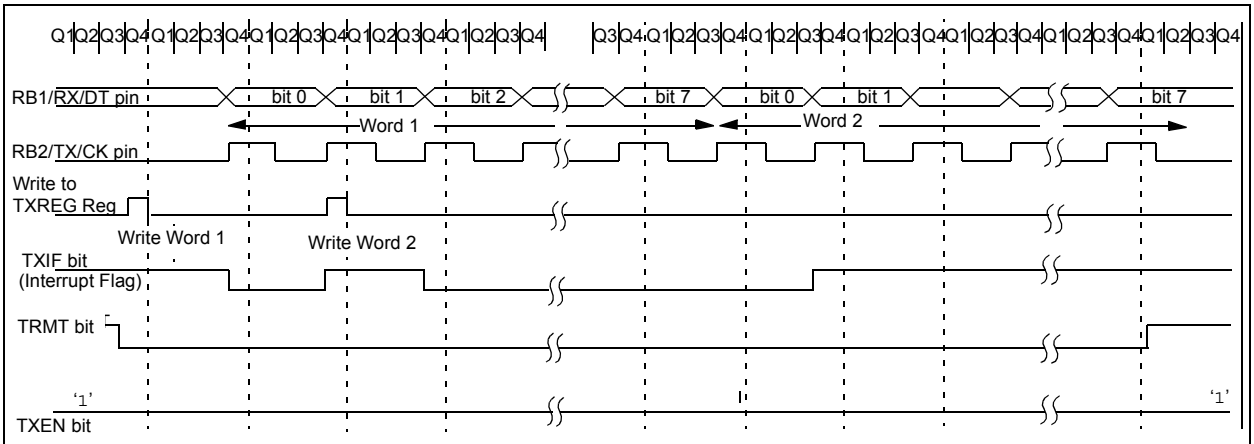

Note: Sync Master Mode; SPBRG = 0. Continuous transmission of two 8-bit words.

FIGURE 12-9: SYNCHRONOUS TRANSMISSION (THROUGH TXEN)

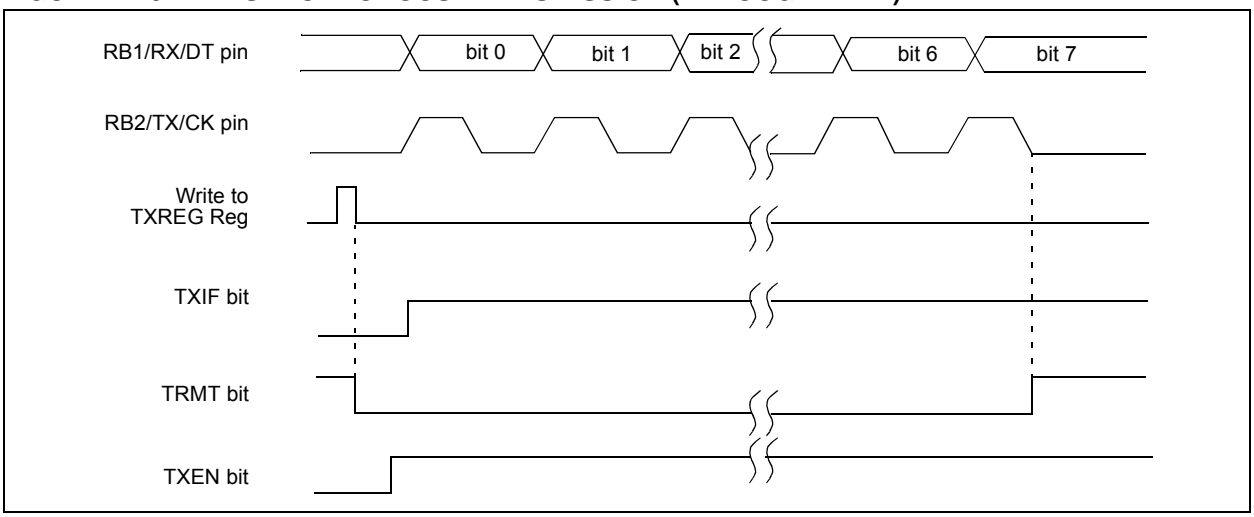

12.4.2 USART SYNCHRONOUS MASTER RECEPTION

Once Synchronous mode is selected, reception is enabled by setting either enable bit SREN (RCSTA<5>) or enable bit CREN (RCSTA<4>). Data is sampled on the RB1/RX/DT pin on the falling edge of the clock. If enable bit SREN is set, then only a single word is received. If enable bit CREN is set, the reception is continuous until CREN is cleared. If both bits are set, then CREN takes precedence. After clocking the last bit, the received data in the Receive Shift Register (RSR) is transferred to the RCREG register (if it is empty). When the transfer is complete, interrupt flag bit RCIF (PIR1<5>) is set. The actual interrupt can be enabled/disabled by setting/clearing enable bit RCIE (PIE1<5>). Flag bit RCIF is a read-only bit which is reset by the hardware. In this case, it is reset when the RCREG register has been read and is empty. The RCREG is a double buffered register (i.e., it is a two-deep FIFO). It is possible for two bytes of data to be received and transferred to the RCREG FIFO and a third byte to begin shifting into the RSR register. On the clocking of the last bit of the third byte, if the RCREG register is still full, then overrun error bit OERR (RCSTA<1>) is set. The word in the RSR will be lost. The RCREG register can be read twice to retrieve the two bytes in the FIFO. Bit OERR has to be cleared in software (by clearing bit CREN). If bit OERR is set, transfers from the RSR to the RCREG are inhibited, so it is essential to clear bit OERR if it is set. The 9th receive bit is buffered the same way as the receive data. Reading the RCREG register, will load bit RX9D with a new value, therefore it is essential for the user to read the RCSTA register before reading RCREG in order not to lose the old RX9D information.

Follow these steps when setting up a Synchronous Master Reception:

1. TRISB<1> and TRISB<2> should both be set to '1' to configure the RB1/RX/DT and RB2/TX/CK pins as inputs. Output drive, when required, is controlled by the peripheral circuitry.
2. Initialize the SPBRG register for the appropriate baud rate. (**Section 12.1 "USART Baud Rate Generator (BRG)"**).
3. Enable the synchronous master serial port by setting bits SYNC, SPEN and CSRC.
4. Ensure bits CREN and SREN are clear.
5. If interrupts are desired, then set enable bit RCIE.
6. If 9-bit reception is desired, then set bit RX9.
7. If a single reception is required, set bit SREN. For continuous reception, set bit CREN.
8. Interrupt flag bit RCIF will be set when reception is complete and an interrupt will be generated if enable bit RCIE was set.
9. Read the RCSTA register to get the ninth bit (if enabled) and determine if any error occurred during reception.
10. Read the 8-bit received data by reading the RCREG register.
11. If an OERR error occurred, clear the error by clearing bit CREN.

TABLE 12-10: REGISTERS ASSOCIATED WITH SYNCHRONOUS MASTER RECEPTION

Address	Name	Bit 7	Bit 6	Bit 5	Bit 4	Bit 3	Bit 2	Bit 1	Bit 0	Value on: POR	Value on all other Resets
0Ch	PIR1	EEIF	CMIF	RCIF	TXIF	—	CCP1IF	TMR2IF	TMR1IF	0000 -000	0000 -000
18h	RCSTA	SPEN	RX9	SREN	CREN	ADEN	FERR	OERR	RX9D	0000 000x	0000 000x
1Ah	RCREG	USART Receive Data Register								0000 0000	0000 0000
8Ch	PIE1	EPIE	CMIE	RCIE	TXIE	—	CCP1IE	TMR2IE	TMR1IE	-000 0000	-000 -000
98h	TXSTA	CSRC	TX9	TXEN	SYNC	—	BRGH	TRMT	TX9D	0000 -010	0000 -010
99h	SPBRG	Baud Rate Generator Register								0000 0000	0000 0000

Legend: x = unknown, - = unimplemented read as '0'. Shaded cells are not used for synchronous master reception.

© 2009 Microchip Technology Inc.

FIGURE 12-10: SYNCHRONOUS RECEPTION (MASTER MODE, SREN)

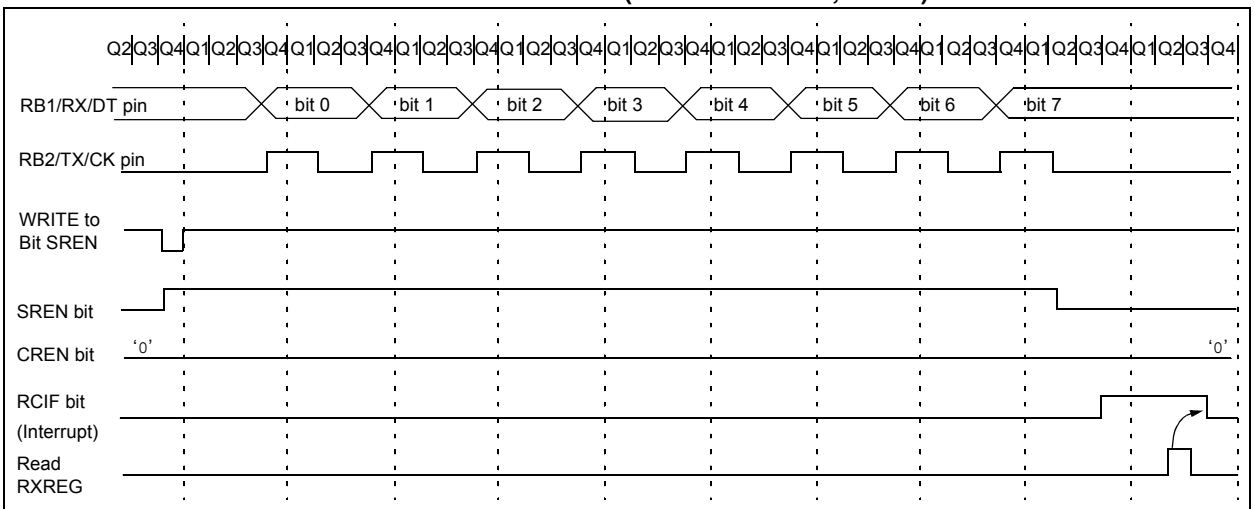

Note: Timing diagram demonstrates Sync Master mode with bit SREN = 1 and bit BRG = 0.

12.5 USART Synchronous Slave Mode

Synchronous Slave mode differs from the Master mode in the fact that the shift clock is supplied externally at the RB2/TX/CK pin (instead of being supplied internally in Master mode). This allows the device to transfer or receive data while in Sleep mode. Slave mode is entered by clearing bit CSRC (TXSTA<7>).

12.5.1 USART SYNCHRONOUS SLAVE TRANSMIT

The operation of the Synchronous Master and Slave modes are identical except in the case of the Sleep mode.

If two words are written to the TXREG and then the SLEEP instruction is executed, the following will occur:

a) The first word will immediately transfer to the TSR register and transmit.
b) The second word will remain in TXREG register.
c) Flag bit TXIF will not be set.
d) When the first word has been shifted out of TSR, the TXREG register will transfer the second word to the TSR and flag bit TXIF will now be set.
e) If enable bit TXIE is set, the interrupt will wake the chip from Sleep and if the global interrupt is enabled, the program will branch to the interrupt vector (0004h).

Follow these steps when setting up a Synchronous Slave Transmission:

1. TRISB<1> and TRISB<2> should both be set to '1' to configure the RB1/RX/DT and RB2/TX/CK pins as inputs. Output drive, when required, is controlled by the peripheral circuitry.
2. Enable the synchronous slave serial port by setting bits SYNC and SPEN and clearing bit CSRC.
3. Clear bits CREN and SREN.
4. If interrupts are desired, then set enable bit TXIE.
5. If 9-bit transmission is desired, then set bit TX9.
6. Enable the transmission by setting enable bit TXEN.
7. If 9-bit transmission is selected, the ninth bit should be loaded in bit TX9D.
8. Start transmission by loading data to the TXREG register.

12.5.2 USART SYNCHRONOUS SLAVE RECEPTION

The operation of the Synchronous Master and Slave modes is identical except in the case of the Sleep mode. Also, bit SREN is a “don’t care” in Slave mode.

If receive is enabled by setting bit CREN prior to the `SLEEP` instruction, then a word may be received during Sleep. On completely receiving the word, the RSR register will transfer the data to the RCREG register and if enable bit RCIE bit is set, the interrupt generated will wake the chip from Sleep. If the global interrupt is enabled, the program will branch to the interrupt vector (0004h).

Follow these steps when setting up a Synchronous Slave Reception:

1. TRISB<1> and TRISB<2> should both be set to ‘1’ to configure the RB1/RX/DT and RB2/TX/CK pins as inputs. Output drive, when required, is controlled by the peripheral circuitry.
2. Enable the synchronous master serial port by setting bits SYNC and SPEN and clearing bit CSRC.
3. If interrupts are desired, then set enable bit RCIE.
4. If 9-bit reception is desired, then set bit RX9.
5. To enable reception, set enable bit CREN.
6. Flag bit RCIF will be set when reception is complete and an interrupt will be generated, if enable bit RCIE was set.
7. Read the RCSTA register to get the ninth bit (if enabled) and determine if any error occurred during reception.
8. Read the 8-bit received data by reading the RCREG register.
9. If an OERR error occurred, clear the error by clearing bit CREN.

TABLE 12-11: REGISTERS ASSOCIATED WITH SYNCHRONOUS SLAVE TRANSMISSION

Address	Name	Bit 7	Bit 6	Bit 5	Bit 4	Bit 3	Bit 2	Bit 1	Bit 0	Value on POR	Value on all other Resets
0Ch	PIR1	EEIF	CMIF	RCIF	TXIF	—	CCP1IF	TMR2IF	TMR1IF	0000 -000	0000 -000
18h	RCSTA	SPEN	RX9	SREN	CREN	ADEN	FERR	OERR	RX9D	0000 000x	0000 000x
19h	TXREG	USART Transmit Data Register								0000 0000	0000 0000
8Ch	PIE1	EEIE	CMIE	RCIE	TXIE	—	CCP1IE	TMR2IE	TMR1IE	0000 -000	0000 -000
98h	TXSTA	CSRC	TX9	TXEN	SYNC	—	BRGH	TRMT	TX9D	0000 -010	0000 -010
99h	SPBRG	Baud Rate Generator Register								0000 0000	0000 0000

Legend: x = unknown, - = unimplemented read as ‘0’. Shaded cells are not used for synchronous slave transmission.

TABLE 12-12: REGISTERS ASSOCIATED WITH SYNCHRONOUS SLAVE RECEPTION

Address	Name	Bit 7	Bit 6	Bit 5	Bit 4	Bit 3	Bit 2	Bit 1	Bit 0	Value on POR	Value on all other Resets
0Ch	PIR1	EEIF	CMIF	RCIF	TXIF	—	CCP1IF	TMR2IF	TMR1IF	0000 -000	0000 -000
18h	RCSTA	SPEN	RX9	SREN	CREN	ADEN	FERR	OERR	RX9D	0000 000x	0000 000x
1Ah	RCREG	USART Receive Data Register								0000 0000	0000 0000
8Ch	PIE1	EEIE	CMIE	RCIE	TXIE	—	CCP1IE	TMR2IE	TMR1IE	0000 -000	0000 -000
98h	TXSTA	CSRC	TX9	TXEN	SYNC	—	BRGH	TRMT	TX9D	0000 -010	0000 -010
99h	SPBRG	Baud Rate Generator Register								0000 0000	0000 0000

Legend: x = unknown, - = unimplemented read as ‘0’. Shaded cells are not used for synchronous slave reception.

© 2009 Microchip Technology Inc.

13.0 DATA EEPROM MEMORY

The EEPROM data memory is readable and writable during normal operation (full VDD range). This memory is not directly mapped in the register file space. Instead it is indirectly addressed through the Special Function Registers (SFRs). There are four SFRs used to read and write this memory. These registers are:

- EECON1
- EECON2 (Not a physically implemented register)
- EEDATA
- EEADR

EEDATA holds the 8-bit data for read/write and EEADR holds the address of the EEPROM location being accessed. PIC16F627A/628A devices have 128 bytes of data EEPROM with an address range from 0h to 7Fh. The PIC16F648A device has 256 bytes of data EEPROM with an address range from 0h to FFh.

The EEPROM data memory allows byte read and write. A byte write automatically erases the location and writes the new data (erase before write). The EEPROM data memory is rated for high erase/write cycles. The write time is controlled by an on-chip timer. The write time will vary with voltage and temperature, as well as from chip-to-chip. Please refer to AC specifications for exact limits.

When the device is code-protected, the CPU can continue to read and write the data EEPROM memory. A device programmer can no longer access this memory.

Additional information on the data EEPROM is available in the *PIC® Mid-Range Reference Manual* (DS33023).

REGISTER 13-1: EEDATA – EEPROM DATA REGISTER (ADDRESS: 9Ah)

R/W-x	R/W-x	R/W-x	R/W-x	R/W-x	R/W-x	R/W-x	R/W-x
EEDAT7	EEDAT6	EEDAT5	EEDAT4	EEDAT3	EEDAT2	EEDAT1	EEDAT0
bit 7							bit 0

bit 7-0 **EEDATn**: Byte value to Write to or Read from data EEPROM memory location.

Legend:			
R = Readable bit	W = Writable bit	U = Unimplemented bit, read as ‘0’	
-n = Value at POR	‘1’ = Bit is set	‘0’ = Bit is cleared	x = Bit is unknown

REGISTER 13-2: EEADR – EEPROM ADDRESS REGISTER (ADDRESS: 9Bh)

R/W-x	R/W-x	R/W-x	R/W-x	R/W-x	R/W-x	R/W-x	R/W-x
EADR7	EADR6	EADR5	EADR4	EADR3	EADR2	EADR1	EADR0
bit 7							bit 0

bit 7 **PIC16F627A/628A**
Unimplemented Address: Must be set to ‘0’

PIC16F648A
EEADR: Set to ‘1’ specifies top 128 locations (128-255) of EEPROM Read/Write Operation

bit 6-0 **EEADR**: Specifies one of 128 locations of EEPROM Read/Write Operation

Legend:			
R = Readable bit	W = Writable bit	U = Unimplemented bit, read as ‘0’	
-n = Value at POR	‘1’ = Bit is set	‘0’ = Bit is cleared	x = Bit is unknown

13.1 EEADR

The PIC16F648A EEADR register addresses 256 bytes of data EEPROM. All eight bits in the register (EEADR<7:0>) are required.

The PIC16F627A/628A EEADR register addresses only the first 128 bytes of data EEPROM so only seven of the eight bits in the register (EEADR<6:0>) are required. The upper bit is address decoded. This means that this bit should always be '0' to ensure that the address is in the 128 byte memory space.

13.2 EECON1 and EECON2 Registers

EECON1 is the control register with four low order bits physically implemented. The upper-four bits are non-existent and read as '0's.

Control bits RD and WR initiate read and write, respectively. These bits cannot be cleared, only set, in software. They are cleared in hardware at completion of the read or write operation. The inability to clear the WR bit in software prevents the accidental, premature termination of a write operation.

The WREN bit, when set, will allow a write operation. On power-up, the WREN bit is clear. The WRERR bit is set when a write operation is interrupted by a $\overline{\text{MCLR}}$ Reset or a WDT Time-out Reset during normal operation. In these situations, following Reset, the user can check the WRERR bit and rewrite the location. The data and address will be unchanged in the EEDATA and EEADR registers.

Interrupt flag bit EEIF in the PIR1 register is set when write is complete. This bit must be cleared in software.

EECON2 is not a physical register. Reading EECON2 will read all '0's. The EECON2 register is used exclusively in the data EEPROM write sequence.

REGISTER 13-3: EECON1 – EEPROM CONTROL REGISTER 1 (ADDRESS: 9Ch)

U-0	U-0	U-0	U-0	R/W-x	R/W-0	R/S-0	R/S-0
—	—	—	—	WRERR	WREN	WR	RD
bit 7							bit 0

bit 7-4 **Unimplemented**: Read as '0'

bit 3 **WRERR**: EEPROM Error Flag bit
- 1 = A write operation is prematurely terminated (any $\overline{\text{MCLR}}$ Reset, any WDT Reset during normal operation or BOR Reset)
- 0 = The write operation completed

bit 2 **WREN**: EEPROM Write Enable bit
- 1 = Allows write cycles
- 0 = Inhibits write to the data EEPROM

bit 1 **WR**: Write Control bit
- 1 = initiates a write cycle. (The bit is cleared by hardware once write is complete. The WR bit can only be set (not cleared) in software.
- 0 = Write cycle to the data EEPROM is complete

bit 0 **RD**: Read Control bit
- 1 = Initiates an EEPROM read (read takes one cycle. RD is cleared in hardware. The RD bit can only be set (not cleared) in software).
- 0 = Does not initiate an EEPROM read

Legend:			
R = Readable bit	W = Writable bit	U = Unimplemented bit, read as '0'	
-n = Value at POR	'1' = Bit is set	'0' = Bit is cleared	x = Bit is unknown

© 2009 Microchip Technology Inc.

13.3 Reading the EEPROM Data Memory

To read a data memory location, the user must write the address to the EEADR register and then set control bit RD (EECON1<0>). The data is available, in the very next cycle, in the EEDATA register; therefore it can be read in the next instruction. EEDATA will hold this value until another read or until it is written to by the user (during a write operation).

EXAMPLE 13-1: DATA EEPROM READ

```
BSF     STATUS, RP0     ;Bank 1
MOVLW   CONFIG_ADDR     ;
MOVWF   EEADR           ;Address to read
BSF     EECON1, RD      ;EE Read
MOVF    EEDATA, W       ;W = EEDATA
BCF     STATUS, RP0     ;Bank 0
```

13.4 Writing to the EEPROM Data Memory

To write an EEPROM data location, the user must first write the address to the EEADR register and the data to the EEDATA register. Then the user must follow a specific sequence to initiate the write for each byte.

EXAMPLE 13-2: DATA EEPROM WRITE

```
        BSF     STATUS, RP0     ;Bank 1
        BSF     EECON1, WREN    ;Enable write
        BCF     INTCON, GIE     ;Disable INTs.
        BTFSC   INTCON,GIE      ;See AN576
        GOTO    $-2
Required MOVLW  55h             ;
Sequence MOVWF  EECON2          ;Write 55h
        MOVLW   AAh             ;
        MOVWF   EECON2          ;Write AAh
        BSF     EECON1,WR       ;Set WR bit
                                ;begin write
        BSF INTCON, GIE         ;Enable INTs.
```

The write will not initiate if the above sequence is not followed exactly (write 55h to EECON2, write AAh to EECON2, then set WR bit) for each byte. We strongly recommend that interrupts be disabled during this code segment. A cycle count is executed during the required sequence. Any number that is not equal to the required cycles to execute the required sequence will cause the data not to be written into the EEPROM.

Additionally, the WREN bit in EECON1 must be set to enable write. This mechanism prevents accidental writes to data EEPROM due to errant (unexpected) code execution (i.e., lost programs). The user should keep the WREN bit clear at all times, except when updating EEPROM. The WREN bit is not cleared by hardware.

After a write sequence has been initiated, clearing the WREN bit will not affect this write cycle. The WR bit will be inhibited from being set unless the WREN bit is set.

At the completion of the write cycle, the WR bit is cleared in hardware and the EE Write Complete Interrupt Flag bit (EEIF) is set. The user can either enable this interrupt or poll this bit. The EEIF bit in the PIR1 registers must be cleared by software.

13.5 Write Verify

Depending on the application, good programming practice may dictate that the value written to the Data EEPROM should be verified (Example 13-3) to the desired value to be written. This should be used in applications where an EEPROM bit will be stressed near the specification limit.

EXAMPLE 13-3: WRITE VERIFY

```
    BSF     STATUS, RP0;Bank 1
    MOVF    EEDATA, W
    BSF     EECON1, RD ;Read the
                       ;value written
;
;Is the value written (in W reg) and
;read (in EEDATA) the same?
;
    SUBWF   EEDATA, W  ;
    BTFSS   STATUS, Z  ;Is difference 0?
    GOTO    WRITE_ERR  ;NO, Write error
    :                  ;YES, Good write
    :                  ;Continue program
```

13.6 Protection Against Spurious Write

There are conditions when the device may not want to write to the data EEPROM memory. To protect against spurious EEPROM writes, various mechanisms have been built-in. On power-up, WREN is cleared. Also when enabled, the Power-up Timer (72 ms duration) prevents EEPROM write.

The write initiate sequence and the WREN bit together help prevent an accidental write during brown-out, power glitch or software malfunction.

13.7 Using the Data EEPROM

The data EEPROM is a high endurance, byte addressable array that has been optimized for the storage of frequently changing information (e.g., program variables or other data that are updated often). When variables in one section change frequently, while variables in another section do not change, it is possible to exceed the total number of write cycles to the EEPROM (specification D124) without exceeding the total number of write cycles to a single byte (specifications D120 and D120A). If this is the case, then an array refresh must be performed. For this reason, variables that change infrequently (such as constants, IDs, calibration, etc.) should be stored in Flash program memory.

A simple data EEPROM refresh routine is shown in Example 13-4.

Note:	If data EEPROM is only used to store constants and/or data that changes rarely, an array refresh is likely not required. See specification D124.

EXAMPLE 13-4: DATA EEPROM REFRESH ROUTINE

```
    BANKSEL     0X80            ;select Bank1
    CLRF        EEADR           ;start at address 0
    BCF         INTCON, GIE     ;disable interrupts
    BTFSC       INTCON, GIE     ;see AN576
    GOTO        $ - 2
    BSF         EECON1, WREN    ;enable EE writes
Loop
    BSF         EECON1, RD      ;retrieve data into EEDATA
    MOVLW       0x55            ;first step of ...
    MOVWF       EECON2          ;... required sequence
    MOVLW       0xAA            ;second step of ...
    MOVWF       EECON2          ;... required sequence
    BSF         EECON1, WR      ;start write sequence
    BTFSC       EECON1, WR      ;wait for write complete
    GOTO        $ - 1

#IFDEF __16F648A                ;256 bytes in 16F648A

    INCFSZ      EEADR, f        ;test for end of memory
#ELSE                           ;128 bytes in 16F627A/628A
    INCF        EEADR, f        ;next address
    BTFSS       EEADR, 7        ;test for end of memory
#ENDIF                          ;end of conditional assembly

    GOTO        Loop            ;repeat for all locations

    BCF         EECON1, WREN    ;disable EE writes
    BSF         INTCON, GIE     ;enable interrupts (optional)
```


© 2009 Microchip Technology Inc.

13.8 Data EEPROM Operation During Code-Protect

When the device is code-protected, the CPU is able to read and write data to the data EEPROM.

TABLE 13-1: REGISTERS/BITS ASSOCIATED WITH DATA EEPROM

Address	Name	Bit 7	Bit 6	Bit 5	Bit 4	Bit 3	Bit 2	Bit 1	Bit 0	Value on Power-on Reset	Value on all other Resets
9Ah	EEDATA	EEPROM Data Register								xxxx xxxx	uuuu uuuu
9Bh	EEADR	EEPROM Address Register								xxxx xxxx	uuuu uuuu
9Ch	EECON1	—	—	—	—	WRERR	WREN	WR	RD	---- x000	---- q000
9Dh	EECON2(1)	EEPROM Control Register 2								---- ----	---- ----

Legend: x = unknown, u = unchanged, - = unimplemented read as '0', q = value depends upon condition.
Shaded cells are not used by data EEPROM.

Note 1: EECON2 is not a physical register.

NOTES:

© 2009 Microchip Technology Inc.

14.0 SPECIAL FEATURES OF THE CPU

Special circuits to deal with the needs of real-time applications are what sets a microcontroller apart from other processors. The PIC16F627A/628A/648A family has a host of such features intended to maximize system reliability, minimize cost through elimination of external components, provide power-saving operating modes and offer code protection.

These are:

1. OSC selection
2. Reset
3. Power-on Reset (POR)
4. Power-up Timer (PWRT)
5. Oscillator Start-Up Timer (OST)
6. Brown-out Reset (BOR)
7. Interrupts
8. Watchdog Timer (WDT)
9. Sleep
10. Code protection
11. ID Locations
12. In-Circuit Serial Programming™ (ICSP™)

The PIC16F627A/628A/648A has a Watchdog Timer which is controlled by configuration bits. It runs off its own RC oscillator for added reliability. There are two timers that offer necessary delays on power-up. One is the Oscillator Start-up Timer (OST), intended to keep the chip in Reset until the crystal oscillator is stable. The other is the Power-up Timer (PWRT), which provides a fixed delay of 72 ms (nominal) on power-up only, designed to keep the part in Reset while the power supply stabilizes. There is also circuitry to reset the device if a brown-out occurs. With these three functions on-chip, most applications need no external Reset circuitry.

The Sleep mode is designed to offer a very low current Power-down mode. The user can wake-up from Sleep through external Reset, Watchdog Timer wake-up or through an interrupt. Several oscillator options are also made available to allow the part to fit the application. The RC oscillator option saves system cost while the LP crystal option saves power. A set of configuration bits are used to select various options.

14.1 Configuration Bits

The configuration bits can be programmed (read as '0') or left unprogrammed (read as '1') to select various device configurations. These bits are mapped in program memory location 2007h.

The user will note that address 2007h is beyond the user program memory space. In fact, it belongs to the special configuration memory space (2000h-3FFFh), which can be accessed only during programming. See "*PIC16F627A/628A/648A EEPROM Memory Programming Specification*" (DS41196) for additional information.

REGISTER 14-1: CONFIG – CONFIGURATION WORD REGISTER

$\overline{CP}$	—	—	—	—	$\overline{CPD}$	LVP	BOREN	MCLRE	FOSC2	$\overline{PWRTE}$	WDTE	F0SC1	F0SC0
bit 13													bit 0

bit 13: **$\overline{CP}$:** Flash Program Memory Code Protection bit[2]
(PIC16F648A)
1 = Code protection off
0 = 0000h to 0FFFh code-protected
(PIC16F628A)
1 = Code protection off
0 = 0000h to 07FFh code-protected
(PIC16F627A)
1 = Code protection off
0 = 0000h to 03FFh code-protected

bit 12-9: **Unimplemented**: Read as '0'

bit 8: **$\overline{CPD}$:** Data Code Protection bit[3]
1 = Data memory code protection off
0 = Data memory code-protected

bit 7: **LVP**: Low-Voltage Programming Enable bit
1 = RB4/PGM pin has PGM function, low-voltage programming enabled
0 = RB4/PGM is digital I/O, HV on $\overline{MCLR}$ must be used for programming

bit 6: **BOREN**: Brown-out Reset Enable bit [1]
1 = BOR Reset enabled
0 = BOR Reset disabled

bit 5: **MCLRE**: RA5/$\overline{MCLR}$/VPP Pin Function Select bit
1 = RA5/$\overline{MCLR}$/VPP pin function is $\overline{MCLR}$
0 = RA5/$\overline{MCLR}$/VPP pin function is digital Input, $\overline{MCLR}$ internally tied to VDD

bit 3: **$\overline{PWRTE}$**: Power-up Timer Enable bit [1]
1 = PWRT disabled
0 = PWRT enabled

bit 2: **WDTE**: Watchdog Timer Enable bit
1 = WDT enabled
0 = WDT disabled

bit 4, 1-0: **FOSC<2:0>**: Oscillator Selection bits[4]
111 = RC oscillator: CLKOUT function on RA6/OSC2/CLKOUT pin, Resistor and Capacitor on RA7/OSC1/CLKIN
110 = RC oscillator: I/O function on RA6/OSC2/CLKOUT pin, Resistor and Capacitor on RA7/OSC1/CLKIN
101 = INTOSC oscillator: CLKOUT function on RA6/OSC2/CLKOUT pin, I/O function on RA7/OSC1/CLKIN
100 = INTOSC oscillator: I/O function on RA6/OSC2/CLKOUT pin, I/O function on RA7/OSC1/CLKIN
011 = EC: I/O function on RA6/OSC2/CLKOUT pin, CLKIN on RA7/OSC1/CLKIN
010 = HS oscillator: High-speed crystal/resonator on RA6/OSC2/CLKOUT and RA7/OSC1/CLKIN
001 = XT oscillator: Crystal/resonator on RA6/OSC2/CLKOUT and RA7/OSC1/CLKIN
000 = LP oscillator: Low-power crystal on RA6/OSC2/CLKOUT and RA7/OSC1/CLKIN

Note 1: Enabling Brown-out Reset does not automatically enable the Power-up Timer (PWRT) the way it does on the PIC16F627/628 devices.
2: The code protection scheme has changed from the code protection scheme used on the PIC16F627/628 devices. The entire Flash program memory needs to be bulk erased to set the $\overline{CP}$ bit, turning the code protection off. See "*PIC16F627A/628A/648A EEPROM Memory Programming Specification*" (DS41196) for details.
3: The entire data EEPROM needs to be bulk erased to set the $\overline{CPD}$ bit, turning the code protection off. See "*PIC16F627A/628A/648A EEPROM Memory Programming Specification*" (DS41196) for details.
4: When $\overline{MCLR}$ is asserted in INTOSC mode, the internal clock oscillator is disabled.

Legend:			
R = Readable bit	W = Writable bit	U = Unimplemented bit, read as '0'	
-n = Value at POR	'1' = bit is set	'0' = bit is cleared	x = bit is unknown

© 2009 Microchip Technology Inc.

14.2 Oscillator Configurations

14.2.1 OSCILLATOR TYPES

The PIC16F627A/628A/648A can be operated in eight different oscillator options. The user can program three configuration bits (FOSC2 through FOSC0) to select one of these eight modes:

- LP Low Power Crystal
- XT Crystal/Resonator
- HS High Speed Crystal/Resonator
- RC External Resistor/Capacitor (2 modes)
- INTOSC Internal Precision Oscillator (2 modes)
- EC External Clock In

14.2.2 CRYSTAL OSCILLATOR / CERAMIC RESONATORS

In XT, LP or HS modes a crystal or ceramic resonator is connected to the OSC1 and OSC2 pins to establish oscillation (Figure 14-1). The PIC16F627A/628A/648A oscillator design requires the use of a parallel cut crystal. Use of a series cut crystal may give a frequency out of the crystal manufacturers specifications. When in XT, LP or HS modes, the device can have an external clock source to drive the OSC1 pin (Figure 14-4).

FIGURE 14-1: CRYSTAL OPERATION (OR CERAMIC RESONATOR) (HS, XT OR LP OSC CONFIGURATION)

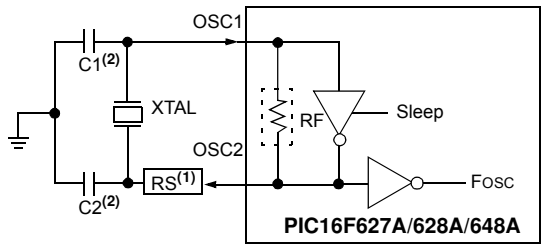

Note 1: A series resistor may be required for AT strip cut crystals.
2: See Table 14-1 and Table 14-2 for recommended values of C1 and C2.

TABLE 14-1: CAPACITOR SELECTION FOR CERAMIC RESONATORS

Mode	Freq	OSC1(C1)	OSC2(C2)
XT	455 kHz 2.0 MHz 4.0 MHz	22-100 pF 15-68 pF 15-68 pF	22-100 pF 15-68 pF 15-68 pF
HS	8.0 MHz 16.0 MHz	10-68 pF 10-22 pF	10-68 pF 10-22 pF

Note: Higher capacitance increases the stability of the oscillator, but also increases the start-up time. These values are for design guidance only. Since each resonator has its own characteristics, the user should consult the resonator manufacturer for appropriate values of external components.

TABLE 14-2: CAPACITOR SELECTION FOR CRYSTAL OSCILLATOR

Mode	Freq	OSC1(C1)	OSC2(C2)
LP	32 kHz 200 kHz	15-30 pF 0-15 pF	15-30 pF 0-15 pF
XT	100 kHz 2 MHz 4 MHz	68-150 pF 15-30 pF 15-30 pF	150-200 pF 15-30 pF 15-30 pF
HS	8 MHz 10 MHz 20 MHz	15-30 pF 15-30 pF 15-30 pF	15-30 pF 15-30 pF 15-30 pF

Note: Higher capacitance increases the stability of the oscillator, but also increases the start-up time. These values are for design guidance only. A series resistor (RS) may be required in HS mode, as well as XT mode, to avoid overdriving crystals with low drive level specification. Since each crystal has its own characteristics, the user should consult the crystal manufacturer for appropriate values of external components.

14.2.3 EXTERNAL CRYSTAL OSCILLATOR CIRCUIT

Either a prepackaged oscillator can be used or a simple oscillator circuit with TTL gates can be built. Prepackaged oscillators provide a wide operating range and better stability. A well-designed crystal oscillator will provide good performance with TTL gates. Two types of crystal oscillator circuits can be used; one with series resonance, or one with parallel resonance.

Figure 14-2 shows implementation of a parallel resonant oscillator circuit. The circuit is designed to use the fundamental frequency of the crystal. The 74AS04 inverter performs the 180° phase shift that a parallel oscillator requires. The 4.7 kΩ resistor provides the negative feedback for stability. The 10 kΩ potentiometers bias the 74AS04 in the linear region. This could be used for external oscillator designs.

FIGURE 14-2: EXTERNAL PARALLEL RESONANT CRYSTAL OSCILLATOR CIRCUIT

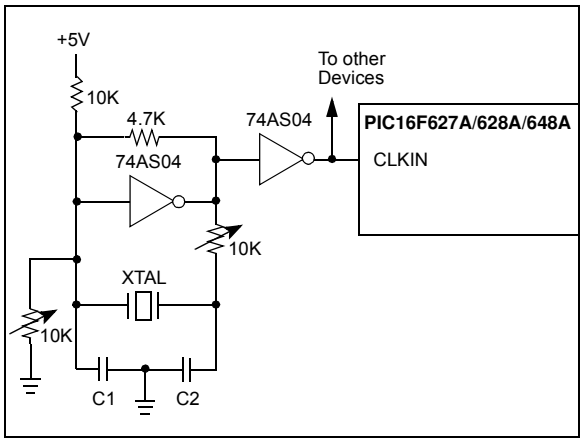

Figure 14-3 shows a series resonant oscillator circuit. This circuit is also designed to use the fundamental frequency of the crystal. The inverter performs a 180° phase shift in a series resonant oscillator circuit. The 330 kΩ resistors provide the negative feedback to bias the inverters in their linear region.

FIGURE 14-3: EXTERNAL SERIES RESONANT CRYSTAL OSCILLATOR CIRCUIT

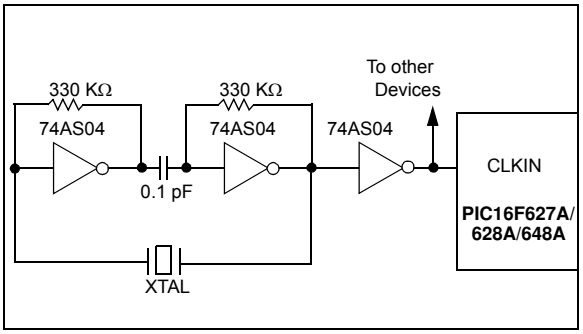

14.2.4 PRECISION INTERNAL 4 MHz OSCILLATOR

The internal precision oscillator provides a fixed 4 MHz (nominal) system clock at VDD = 5V and 25°C. See **Section 17.0 "Electrical Specifications"**, for information on variation over voltage and temperature.

14.2.5 EXTERNAL CLOCK IN

For applications where a clock is already available elsewhere, users may directly drive the PIC16F627A/628A/648A provided that this external clock source meets the AC/DC timing requirements listed in **Section 17.6 "Timing Diagrams and Specifications"**. Figure 14-4 below shows how an external clock circuit should be configured.

FIGURE 14-4: EXTERNAL CLOCK INPUT OPERATION (EC, HS, XT OR LP OSC CONFIGURATION)

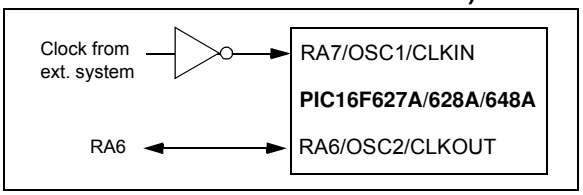

© 2009 Microchip Technology Inc.

14.2.6 RC OSCILLATOR

For applications where precise timing is not a requirement, the RC oscillator option is available. The operation and functionality of the RC oscillator is dependent upon a number of variables. The RC oscillator frequency is a function of:

- Supply voltage
- Resistor (R_{EXT}) and capacitor (C_{EXT}) values
- Operating temperature

The oscillator frequency will vary from unit-to-unit due to normal process parameter variation. The difference in lead frame capacitance between package types will also affect the oscillation frequency, especially for low C_{EXT} values. The user also needs to account for the tolerance of the external R and C components. Figure 14-5 shows how the R/C combination is connected.

FIGURE 14-5: RC OSCILLATOR MODE

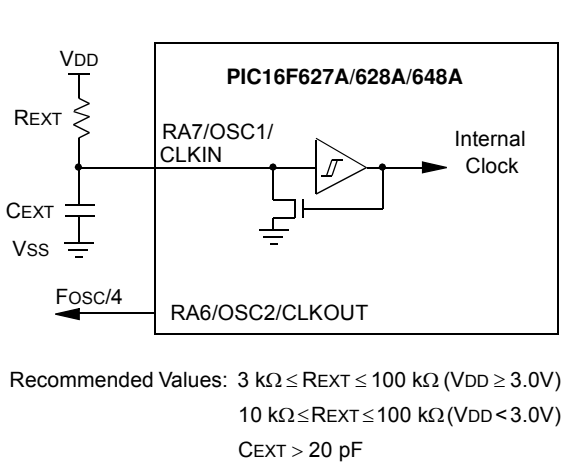

The RC Oscillator mode has two options that control the unused OSC2 pin. The first allows it to be used as a general purpose I/O port. The other configures the pin as an output providing the F_{OSC} signal (internal clock divided by 4) for test or external synchronization purposes.

14.2.7 CLKOUT

The PIC16F627A/628A/648A can be configured to provide a clock out signal by programming the Configuration Word. The oscillator frequency, divided by 4 can be used for test purposes or to synchronize other logic.

14.2.8 SPECIAL FEATURE: DUAL-SPEED OSCILLATOR MODES

A software programmable dual-speed oscillator mode is provided when the PIC16F627A/628A/648A is configured in the INTOSC oscillator mode. This feature allows users to dynamically toggle the oscillator speed between 4 MHz and 48 kHz nominal in the INTOSC mode. Applications that require low-current power savings, but cannot tolerate putting the part into Sleep, may use this mode.

There is a time delay associated with the transition between fast and slow oscillator speeds. This oscillator speed transition delay consists of two existing clock pulses and eight new speed clock pulses. During this clock speed transition delay, the System Clock is halted causing the processor to be frozen in time. During this delay, the program counter and the CLKOUT stop.

The OSCF bit in the PCON register is used to control Dual Speed mode. See **Section 4.2.2.6 "PCON Register"**, Register 4-6.

14.3 Reset

The PIC16F627A/628A/648A differentiates between various kinds of Reset:

a) Power-on Reset (POR)
b) $\overline{MCLR}$ Reset during normal operation
c) $\overline{MCLR}$ Reset during Sleep
d) WDT Reset (normal operation)
e) WDT wake-up (Sleep)
f) Brown-out Reset (BOR)

Some registers are not affected in any Reset condition; their status is unknown on POR and unchanged in any other Reset. Most other registers are reset to a "Reset state" on Power-on Reset, Brown-out Reset, $\overline{MCLR}$ Reset, WDT Reset and $\overline{MCLR}$ Reset during Sleep. They are not affected by a WDT wake-up, since this is viewed as the resumption of normal operation. $\overline{TO}$ and $\overline{PD}$ bits are set or cleared differently in different Reset situations as indicated in Table 14-4. These bits are used in software to determine the nature of the Reset. See Table 14-7 for a full description of Reset states of all registers.

A simplified block diagram of the on-chip Reset circuit is shown in Figure 14-6.

The $\overline{MCLR}$ Reset path has a noise filter to detect and ignore small pulses. See Table 17-7 for pulse width specification.

FIGURE 14-6: SIMPLIFIED BLOCK DIAGRAM OF ON-CHIP RESET CIRCUIT

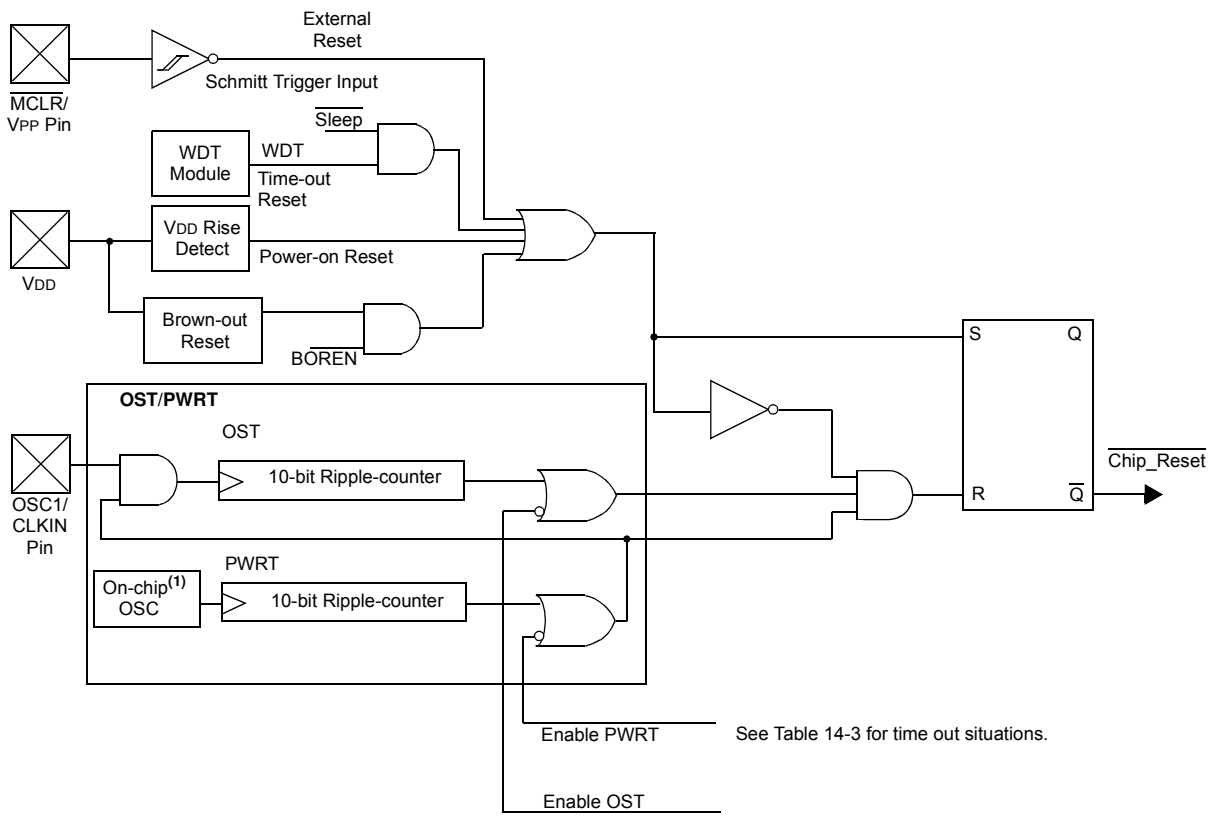

Note 1: This is a separate oscillator from the INTOSC/RC oscillator.

© 2009 Microchip Technology Inc.

14.4 Power-on Reset (POR), Power-up Timer (PWRT), Oscillator Start-up Timer (OST) and Brown-out Reset (BOR)

14.4.1 POWER-ON RESET (POR)

The on-chip POR holds the part in Reset until a VDD rise is detected (in the range of 1.2-1.7V). A maximum rise time for VDD is required. See **Section 17.0 "Electrical Specifications"** for details.

The POR circuit does not produce an internal Reset when VDD declines.

When the device starts normal operation (exits the Reset condition), device operating parameters (voltage, frequency, temperature, etc.) must be met to ensure proper operation. If these conditions are not met, the device must be held in Reset via $\overline{\text{MCLR}}$, BOR or PWRT until the operating conditions are met.

For additional information, refer to Application Note AN607 "*Power-up Trouble Shooting*" (DS00607).

14.4.2 POWER-UP TIMER (PWRT)

The PWRT provides a fixed 72 ms (nominal) time out on power-up (POR) or if enabled from a Brown-out Reset. The PWRT operates on an internal RC oscillator. The chip is kept in Reset as long as PWRT is active. The PWRT delay allows the VDD to rise to an acceptable level. A configuration bit, $\overline{\text{PWRTE}}$ can disable (if set) or enable (if cleared or programmed) the PWRT. It is recommended that the PWRT be enabled when Brown-out Reset is enabled.

The power-up time delay will vary from chip-to-chip and due to VDD, temperature and process variation. See DC parameters Table 17-7 for details.

14.4.3 OSCILLATOR START-UP TIMER (OST)

The OST provides a 1024 oscillator cycle (from OSC1 input) delay after the PWRT delay is over. Program execution will not start until the OST time out is complete. This ensures that the crystal oscillator or resonator has started and stabilized.

The OST time out is invoked only for XT, LP and HS modes and only on Power-on Reset or wake-up from Sleep. See Table 17-7.

14.4.4 BROWN-OUT RESET (BOR)

The PIC16F627A/628A/648A have on-chip BOR circuitry. A configuration bit, BOREN, can disable (if clear/programmed) or enable (if set) the BOR circuitry. If VDD falls below VBOR for longer than TBOR, the brown-out situation will reset the chip. A Reset is not assured if VDD falls below VBOR for shorter than TBOR. VBOR and TBOR are defined in Table 17-2 and Table 17-7, respectively.

On any Reset (Power-on, Brown-out, Watchdog, etc.), the chip will remain in Reset until VDD rises above VBOR (see Figure 14-7). The Power-up Timer will now be invoked, if enabled, and will keep the chip in Reset an additional 72 ms.

If VDD drops below VBOR while the Power-up Timer is running, the chip will go back into a Brown-out Reset and the Power-up Timer will be re-initialized. Once VDD rises above VBOR, the Power-Up Timer will execute a 72 ms Reset. Figure 14-7 shows typical brown-out situations.

FIGURE 14-7: BROWN-OUT SITUATIONS WITH PWRT ENABLED

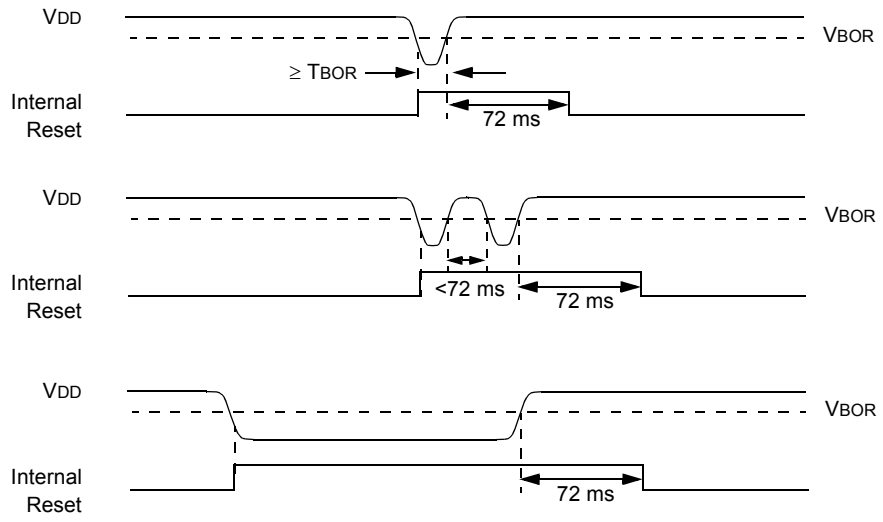

Note: 72 ms delay only if $\overline{\text{PWRTE}}$ bit is programmed to '0'.

14.4.5 TIME OUT SEQUENCE

On power-up, the time out sequence is as follows: First PWRT time-out is invoked after POR has expired. Then OST is activated. The total time out will vary based on oscillator configuration and $\overline{\text{PWRTE}}$ bit Status. For example, in RC mode with $\overline{\text{PWRTE}}$ bit set (PWRT disabled), there will be no time out at all. Figure 14-8, Figure 14-11 and Figure 14-12 depict time out sequences.

Since the time outs occur from the POR pulse, if $\overline{\text{MCLR}}$ is kept low long enough, the time outs will expire. Then bringing $\overline{\text{MCLR}}$ high will begin execution immediately (see Figure 14-11). This is useful for testing purposes or to synchronize more than one PIC16F627A/628A/648A device operating in parallel.

Table 14-6 shows the Reset conditions for some special registers, while Table 14-7 shows the Reset conditions for all the registers.

14.4.6 POWER CONTROL (PCON) STATUS REGISTER

The PCON/Status register, PCON (address 8Eh), has two bits.

Bit 0 is $\overline{\text{BOR}}$ (Brown-out Reset). $\overline{\text{BOR}}$ is unknown on Power-on Reset. It must then be set by the user and checked on subsequent Resets to see if $\overline{\text{BOR}}$ = 0 indicating that a brown-out has occurred. The $\overline{\text{BOR}}$ Status bit is a “don’t care” and is not necessarily predictable if the brown-out circuit is disabled (by setting BOREN bit = 0 in the Configuration Word).

Bit 1 is $\overline{\text{POR}}$ (Power-on Reset). It is a ‘0’ on Power-on Reset and unaffected otherwise. The user must write a ‘1’ to this bit following a Power-on Reset. On a subsequent Reset if $\overline{\text{POR}}$ is ‘0’, it will indicate that a Power-on Reset must have occurred (V_{DD} may have gone too low).

TABLE 14-3: TIME OUT IN VARIOUS SITUATIONS

Oscillator Configuration	Power-up Timer		Brown-out Reset		Wake-up from Sleep
	$\overline{\text{PWRTE}}$ = 0	$\overline{\text{PWRTE}}$ = 1	$\overline{\text{PWRTE}}$ = 0	$\overline{\text{PWRTE}}$ = 1	
XT, HS, LP	72 ms + 1024•TOSC	1024•TOSC	72 ms + 1024•TOSC	1024•TOSC	1024•TOSC
RC, EC	72 ms	—	72 ms	—	—
INTOSC	72 ms	—	72 ms	—	6 μs

TABLE 14-4: STATUS/PCON BITS AND THEIR SIGNIFICANCE

$\overline{\text{POR}}$	$\overline{\text{BOR}}$	$\overline{\text{TO}}$	$\overline{\text{PD}}$	Condition
0	X	1	1	Power-on Reset
0	X	0	X	Illegal, $\overline{\text{TO}}$ is set on $\overline{\text{POR}}$
0	X	X	0	Illegal, $\overline{\text{PD}}$ is set on $\overline{\text{POR}}$
1	0	X	X	Brown-out Reset
1	1	0	u	WDT Reset
1	1	0	0	WDT Wake-up
1	1	u	u	$\overline{\text{MCLR}}$ Reset during normal operation
1	1	1	0	$\overline{\text{MCLR}}$ Reset during Sleep

Legend: u = unchanged, x = unknown

© 2009 Microchip Technology Inc.

TABLE 14-5: SUMMARY OF REGISTERS ASSOCIATED WITH BROWN-OUT RESET

Address	Name	Bit 7	Bit 6	Bit 5	Bit 4	Bit 3	Bit 2	Bit 1	Bit 0	Value on POR Reset	Value on all other Resets(1)
03h, 83h, 103h, 183h	STATUS	IRP	RP1	RPO	$\overline{TO}$	$\overline{PD}$	Z	DC	C	0001 1xxx	000q quuu
8Eh	PCON	—	—	—	—	OSCF	—	$\overline{POR}$	$\overline{BOR}$	---- 1-0x	---- u-uq

Legend: x = unknown, u = unchanged, - = unimplemented read as '0', q = value depends upon condition.
Shaded cells are not used by Brown-out Reset.

Note 1: Other (non Power-up) Resets include $\overline{MCLR}$ Reset, Brown-out Reset and Watchdog Timer Reset during normal operation.

TABLE 14-6: INITIALIZATION CONDITION FOR SPECIAL REGISTERS

Condition	Program Counter	Status Register	PCON Register
Power-on Reset	000h	0001 1xxx	---- 1-0x
$\overline{MCLR}$ Reset during normal operation	000h	000u uuuu	---- 1-uu
$\overline{MCLR}$ Reset during Sleep	000h	0001 0uuu	---- 1-uu
WDT Reset	000h	0000 uuuu	---- 1-uu
WDT Wake-up	PC + 1	uuu0 0uuu	---- u-uu
Brown-out Reset	000h	000x xuuu	---- 1-u0
Interrupt Wake-up from Sleep	PC + 1(1)	uuu1 0uuu	---- u-uu

Legend: u = unchanged, x = unknown, - = unimplemented bit, reads as '0'.

Note 1: When the wake-up is due to an interrupt and global enable bit, GIE is set, the PC is loaded with the interrupt vector (0004h) after execution of PC + 1.

TABLE 14-7: INITIALIZATION CONDITION FOR REGISTERS

Register	Address	Power-on Reset	• $\overline{\text{MCLR}}$ Reset during normal operation • $\overline{\text{MCLR}}$ Reset during Sleep • WDT Reset • Brown-out Reset (1)	• Wake-up from Sleep(7) through interrupt • Wake-up from Sleep(7) through WDT time out
W	—	xxxx xxxx	uuuu uuuu	uuuu uuuu
INDF	00h, 80h, 100h, 180h	—	—	—
TMR0	01h, 101h	xxxx xxxx	uuuu uuuu	uuuu uuuu
PCL	02h, 82h, 102h, 182h	0000 0000	0000 0000	PC + 1(3)
STATUS	03h, 83h, 103h, 183h	0001 1xxx	000q quuu(4)	uuuq 0uuu(4)
FSR	04h, 84h, 104h, 184h	xxxx xxxx	uuuu uuuu	uuuu uuuu
PORTA	05h	xxxx 0000	xxxx 0000	uuuu uuuu
PORTB	06h, 106h	xxxx xxxx	uuuu uuuu	uuuu uuuu
PCLATH	0Ah, 8Ah, 10Ah, 18Ah	---0 0000	---0 0000	---u uuuu
INTCON	0Bh, 8Bh, 10Bh,18Bh	0000 000x	0000 000u	uuuu uqqq(2)
PIR1	0Ch	0000 -000	0000 -000	qqqq -qqq(2)
TMR1L	0Eh	xxxx xxxx	uuuu uuuu	uuuu uuuu
TMR1H	0Fh	xxxx xxxx	uuuu uuuu	uuuu uuuu
T1CON	10h	--00 0000	--uu uuuu(6)	--uu uuuu
TMR2	11h	0000 0000	0000 0000	uuuu uuuu
T2CON	12h	-000 0000	-000 0000	-uuu uuuu
CCPR1L	15h	xxxx xxxx	uuuu uuuu	uuuu uuuu
CCPR1H	16h	xxxx xxxx	uuuu uuuu	uuuu uuuu
CCP1CON	17h	--00 0000	--00 0000	--uu uuuu
RCSTA	18h	0000 000x	0000 000x	uuuu uuuu
TXREG	19h	0000 0000	0000 0000	uuuu uuuu
RCREG	1Ah	0000 0000	0000 0000	uuuu uuuu
CMCON	1Fh	0000 0000	0000 0000	uu-- uuuu
OPTION	81h,181h	1111 1111	1111 1111	uuuu uuuu
TRISA	85h	1111 1111	1111 1111	uuuu uuuu
TRISB	86h, 186h	1111 1111	1111 1111	uuuu uuuu
PIE1	8Ch	0000 -000	0000 -000	uuuu -uuu
PCON	8Eh	---- 1-0x	---- 1-uq(1,5)	---- u-uu
PR2	92h	1111 1111	1111 1111	uuuu uuuu
TXSTA	98h	0000 -010	0000 -010	uuuu -uuu
SPBRG	99h	0000 0000	0000 0000	uuuu uuuu
EEDATA	9Ah	xxxx xxxx	uuuu uuuu	uuuu uuuu
EEADR	9Bh	xxxx xxxx	uuuu uuuu	uuuu uuuu
EECON1	9Ch	---- x000	---- q000	---- uuuu
EECON2	9Dh	—	—	—
VRCON	9Fh	000- 0000	000- 0000	uuu- uuuu

Legend: u = unchanged, x = unknown, - = unimplemented bit, reads as '0', q = value depends on condition.

Note 1: If VDD goes too low, Power-on Reset will be activated and registers will be affected differently.
2: One or more bits in INTCON and PIR1 will be affected (to cause wake-up).
3: When the wake-up is due to an interrupt and the GIE bit is set, the PC is loaded with the interrupt vector (0004h).
4: See Table 14-6 for Reset value for specific condition.
5: If Reset was due to brown-out, then bit 0 = 0. All other Resets will cause bit 0 = u.
6: Reset to '--00 0000' on a Brown-out Reset (BOR).
7: Peripherals generating interrupts for wake-up from Sleep will change the resulting bits in the associated registers.

© 2009 Microchip Technology Inc.

FIGURE 14-8: TIME OUT SEQUENCE ON POWER-UP ($\overline{MCLR}$ NOT TIED TO VDD): CASE

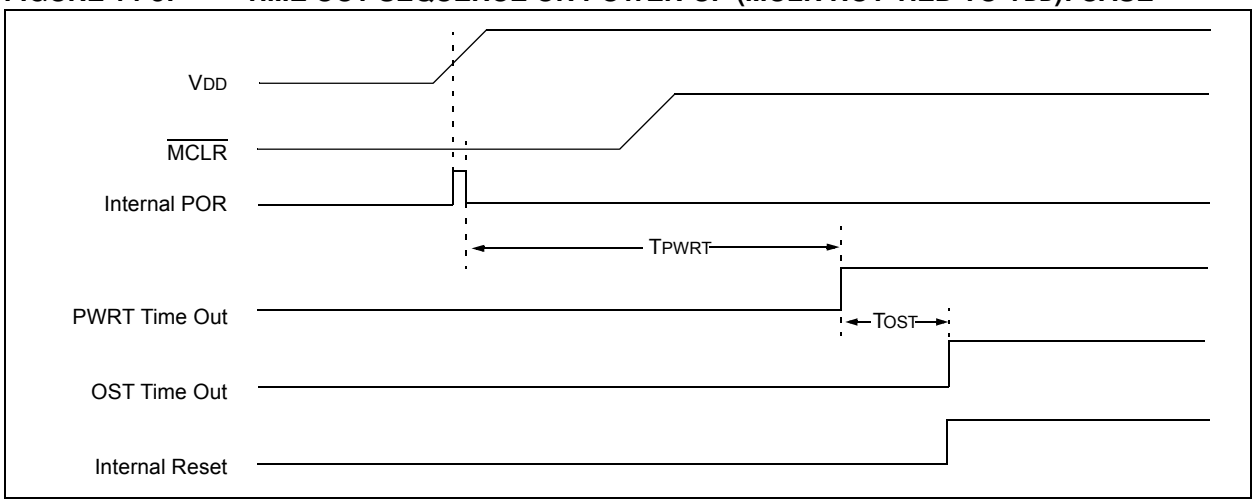

FIGURE 14-9: TIME OUT SEQUENCE ON POWER-UP ($\overline{MCLR}$ NOT TIED TO VDD): CASE 2

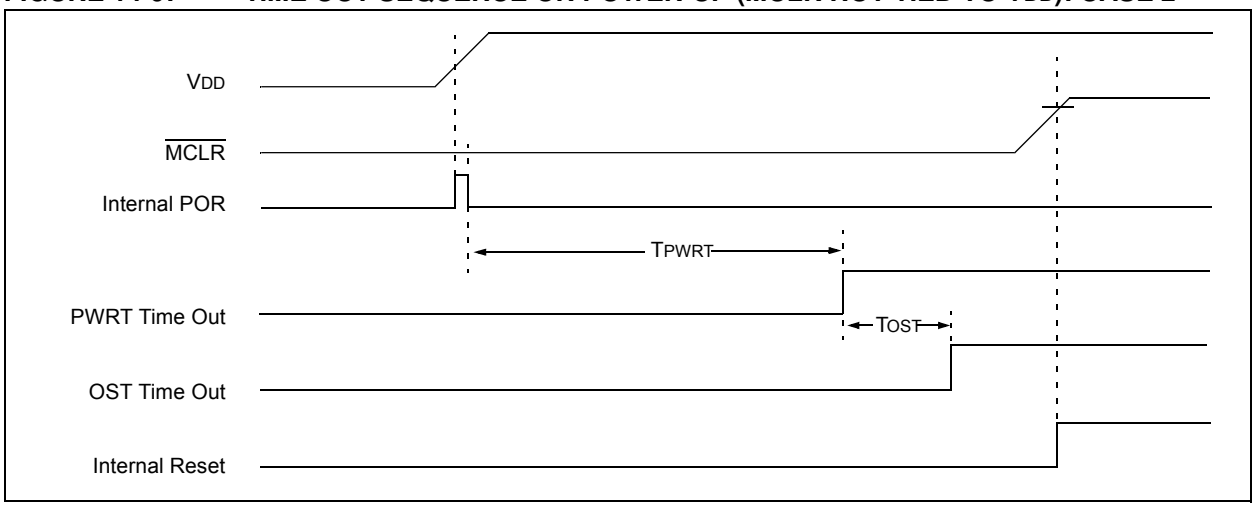

FIGURE 14-10: TIME OUT SEQUENCE ON POWER-UP ($\overline{MCLR}$ TIED TO VDD)

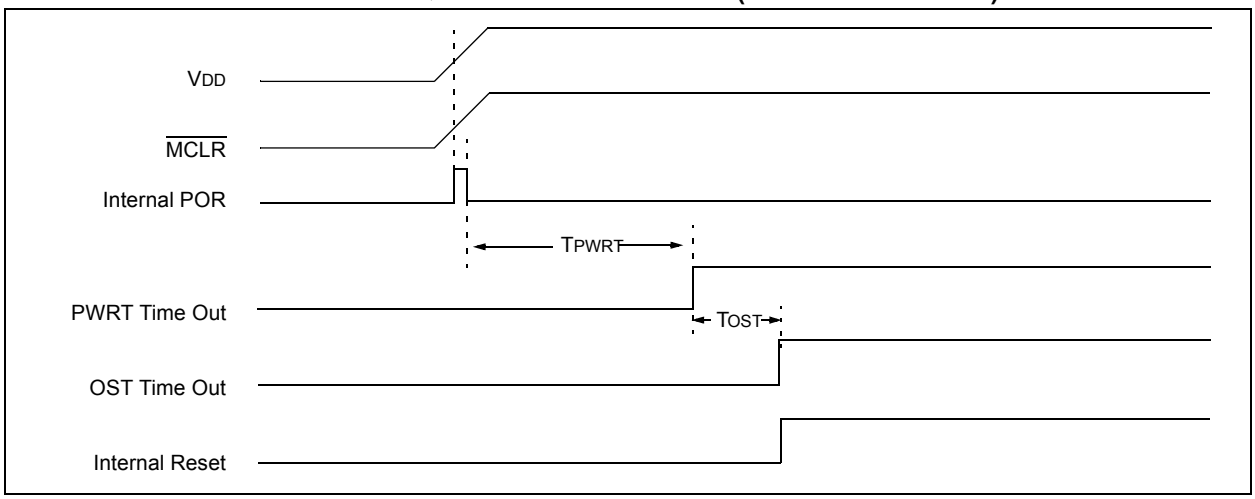

FIGURE 14-11: EXTERNAL POWER-ON RESET CIRCUIT (FOR SLOW VDD POWER-UP)

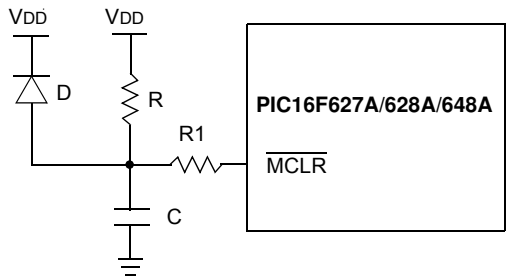

Note 1: External Power-on Reset circuit is required only if VDD power-up slope is too slow. The diode D helps discharge the capacitor quickly when VDD powers down.

2: R < 40 kΩ is recommended to make sure that voltage drop across R does not violate the device's electrical specification.

3: R1 = 100Ω to 1 kΩ will limit any current flowing into MCLR from external capacitor C in the event of MCLR/VPP pin break-down due to Electrostatic Discharge (ESD) or Electrical Overstress (EOS).

FIGURE 14-12: EXTERNAL BROWN-OUT PROTECTION CIRCUIT 1

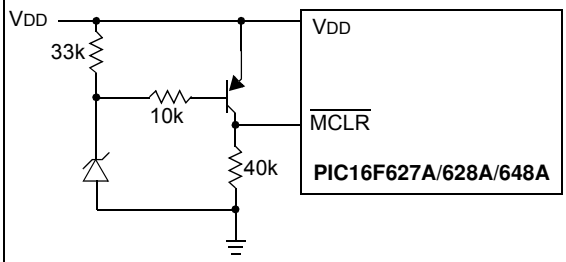

Note 1: This circuit will activate Reset when VDD goes below (Vz + 0.7V) where Vz = Zener voltage.

2: Internal Brown-out Reset circuitry should be disabled when using this circuit.

FIGURE 14-13: EXTERNAL BROWN-OUT PROTECTION CIRCUIT 2

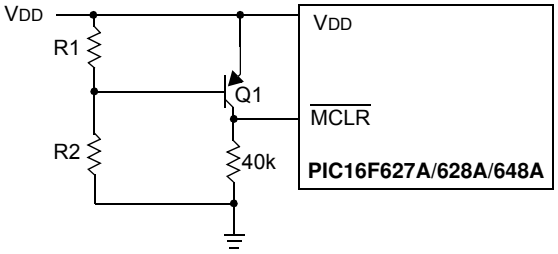

Note 1: This brown-out circuit is less expensive, albeit less accurate. Transistor Q1 turns off when VDD is below a certain level such that:

$$V_{DD} \times \frac{R1}{R1 + R2} = 0.7\ V$$

2: Internal Brown-out Reset should be disabled when using this circuit.

3: Resistors should be adjusted for the characteristics of the transistor.

© 2009 Microchip Technology Inc.

14.5 Interrupts

The PIC16F627A/628A/648A has 10 sources of interrupt:

- External Interrupt RB0/INT
- TMR0 Overflow Interrupt
- PORTB Change Interrupts (pins RB<7:4>)
- Comparator Interrupt
- USART Interrupt TX
- USART Interrupt RX
- CCP Interrupt
- TMR1 Overflow Interrupt
- TMR2 Match Interrupt
- Data EEPROM Interrupt

The Interrupt Control register (INTCON) records individual interrupt requests in flag bits. It also has individual and global interrupt enable bits.

A Global Interrupt Enable bit, GIE (INTCON<7>) enables (if set) all un-masked interrupts or disables (if cleared) all interrupts. Individual interrupts can be disabled through their corresponding enable bits in INTCON register. GIE is cleared on Reset.

The "return-from-interrupt" instruction, `RETFIE`, exits interrupt routine as well as sets the GIE bit, which re-enables RB0/INT interrupts.

The INT pin interrupt, the RB port change interrupt and the TMR0 overflow interrupt flags are contained in the INTCON register.

The peripheral interrupt flag is contained in the special register PIR1. The corresponding interrupt enable bit is contained in special registers PIE1.

When an interrupt is responded to, the GIE is cleared to disable any further interrupt, the return address is pushed into the stack and the PC is loaded with 0004h. Once in the interrupt service routine, the source(s) of the interrupt can be determined by polling the interrupt flag bits. The interrupt flag bit(s) must be cleared in software before re-enabling interrupts to avoid RB0/INT recursive interrupts.

For external interrupt events, such as the INT pin or PORTB change interrupt, the interrupt latency will be three or four instruction cycles. The exact latency depends when the interrupt event occurs (Figure 14-15). The latency is the same for one or two-cycle instructions. Once in the interrupt service routine, the source(s) of the interrupt can be determined by polling the interrupt flag bits. The interrupt flag bit(s) must be cleared in software before re-enabling interrupts to avoid multiple interrupt requests.

Note 1: Individual interrupt flag bits are set regardless of the status of their corresponding mask bit or the GIE bit.

2: When an instruction that clears the GIE bit is executed, any interrupts that were pending for execution in the next cycle are ignored. The CPU will execute a `NOP` in the cycle immediately following the instruction which clears the GIE bit. The interrupts which were ignored are still pending to be serviced when the GIE bit is set again.

FIGURE 14-14: INTERRUPT LOGIC

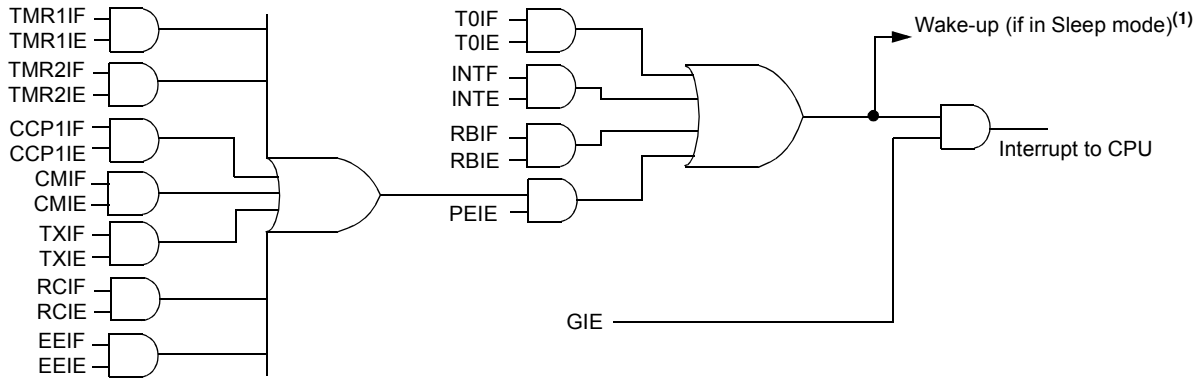

Note 1: Some peripherals depend upon the system clock for operation. Since the system clock is suspended during Sleep, only those peripherals which do not depend upon the system clock will wake the part from Sleep. See **Section 14.8.1 "Wake-up from Sleep"**.

14.5.1 RB0/INT INTERRUPT

External interrupt on the RB0/INT pin is edge triggered; either rising if INTEDG bit (OPTION<6>) is set, or falling, if INTEDG bit is clear. When a valid edge appears on the RB0/INT pin, the INTF bit (INTCON<1>) is set. This interrupt can be disabled by clearing the INTE control bit (INTCON<4>). The INTF bit must be cleared in software in the interrupt service routine before re-enabling this interrupt. The RB0/INT interrupt can wake-up the processor from Sleep, if the INTE bit was set prior to going into Sleep. The status of the GIE bit decides whether or not the processor branches to the interrupt vector following wake-up. See **Section 14.8 "Power-Down Mode (Sleep)"** for details on Sleep, and Figure 14-17 for timing of wake-up from Sleep through RB0/INT interrupt.

14.5.2 TMR0 INTERRUPT

An overflow (FFh → 00h) in the TMR0 register will set the T0IF (INTCON<2>) bit. The interrupt can be enabled/disabled by setting/clearing T0IE (INTCON<5>) bit. For operation of the Timer0 module, see **Section 6.0 "Timer0 Module"**.

14.5.3 PORTB INTERRUPT

An input change on PORTB <7:4> sets the RBIF (INTCON<0>) bit. The interrupt can be enabled/disabled by setting/clearing the RBIE (INTCON<3>) bit. For operation of PORTB (**Section 5.2 "PORTB and TRISB Registers"**).

Note:	If a change on the I/O pin should occur when the read operation is being executed (starts during the Q2 cycle and ends before the start of the Q3 cycle), then the RBIF interrupt flag may not get set.

14.5.4 COMPARATOR INTERRUPT

See **Section 10.6 "Comparator Interrupts"** for complete description of comparator interrupts.

FIGURE 14-15: INT PIN INTERRUPT TIMING

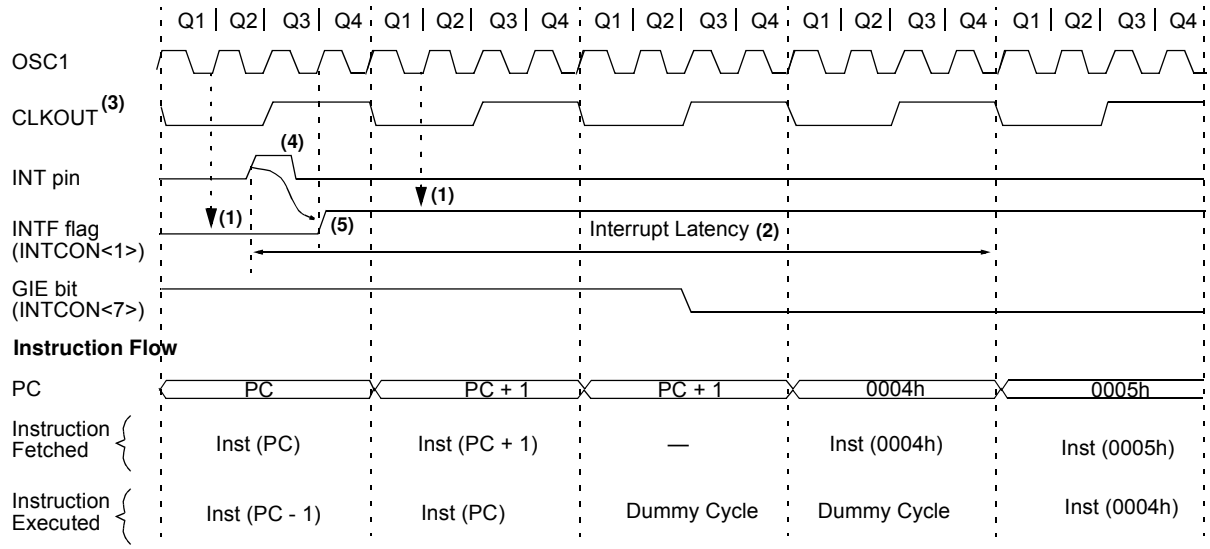

Note 1: INTF flag is sampled here (every Q1).
2: Asynchronous interrupt latency = 3-4 TCY. Synchronous latency = 3 TCY, where TCY = instruction cycle time. Latency is the same whether Inst (PC) is a single cycle or a two-cycle instruction.
3: CLKOUT is available in RC and INTOSC oscillator mode.
4: For minimum width of INT pulse, refer to AC specs.
5: INTF is enabled to be set anytime during the Q4-Q1 cycles.

© 2009 Microchip Technology Inc.

TABLE 14-8: SUMMARY OF INTERRUPT REGISTERS

Address	Name	Bit 7	Bit 6	Bit 5	Bit 4	Bit 3	Bit 2	Bit 1	Bit 0	Value on POR Reset	Value on all other Resets(1)
0Bh, 8Bh, 10Bh, 18Bh	INTCON	GIE	PEIE	T0IE	INTE	RBIE	T0IF	INTF	RBIF	0000 000x	0000 000u
0Ch	PIR1	EEIF	CMIF	RCIF	TXIF	—	CCP1IF	TMR2IF	TMR1IF	0000 -000	0000 -000
8Ch	PIE1	EEIE	CMIE	RCIE	TXIE	—	CCP1IE	TMR2IE	TMR1IE	0000 -000	0000 -000

Note 1: Other (non Power-up) Resets include $\overline{\text{MCLR}}$ Reset, Brown-out Reset and Watchdog Timer Reset during normal operation.

14.6 Context Saving During Interrupts

During an interrupt, only the return PC value is saved on the stack. Typically, users may wish to save key registers during an interrupt (e.g., W register and Status register). This must be implemented in software.

Example 14-1 stores and restores the Status and W registers. The user register, W_TEMP, must be defined in a common memory location (i.e., W_TEMP is defined at 0x70 in Bank 0 and is therefore, accessible at 0xF0, 0x170 and 0x1F0). The Example 14-1:

- Stores the W register
- Stores the Status register
- Executes the ISR code
- Restores the Status (and bank select bit register)
- Restores the W register

EXAMPLE 14-1: SAVING THE STATUS AND W REGISTERS IN RAM

```
MOVWF   W_TEMP      ;copy W to temp register,
                    ;could be in any bank
SWAPF   STATUS,W    ;swap status to be saved
                    ;into W
BCF     STATUS,RP0  ;change to bank 0
                    ;regardless of current
                    ;bank
MOVWF   STATUS_TEMP ;save status to bank 0
                    ;register
    :
    :(ISR)
    :

SWAPF   STATUS_TEMP,W;swap STATUS_TEMP
register
                    ;into W, sets bank to
original
                    ;state
MOVWF   STATUS      ;move W into STATUS
                    ;register
SWAPF   W_TEMP,F    ;swap W_TEMP
SWAPF   W_TEMP,W    ;swap W_TEMP into W
```

14.7 Watchdog Timer (WDT)

The Watchdog Timer is a free running on-chip RC oscillator which does not require any external components. This RC oscillator is separate from the RC oscillator of the CLKIN pin. That means that the WDT will run, even if the clock on the OSC1 and OSC2 pins of the device has been stopped, for example, by execution of a SLEEP instruction. During normal operation, a WDT time out generates a device Reset. If the device is in Sleep mode, a WDT time out causes the device to wake-up and continue with normal operation. The WDT can be permanently disabled by programming the configuration bit WDTE as clear (**Section 14.1 "Configuration Bits"**).

14.7.1 WDT PERIOD

The WDT has a nominal time-out period of 18 ms (with no prescaler). The time-out periods vary with temperature, VDD and process variations from part to part (see DC Specifications, Table 17-7). If longer time-out periods are desired, a postscaler with a division ratio of up to 1:128 can be assigned to the WDT under software control by writing to the OPTION register. Thus, time-out periods up to 2.3 seconds can be realized.

The CLRWDT and SLEEP instructions clear the WDT and the postscaler, if assigned to the WDT, and prevent it from timing out and generating a device Reset.

The $\overline{\text{TO}}$ bit in the Status register will be cleared upon a Watchdog Timer time out.

14.7.2 WDT PROGRAMMING CONSIDERATIONS

It should also be taken in account that under worst case conditions (VDD = Min., Temperature = Max., max. WDT prescaler) it may take several seconds before a WDT time out occurs.

FIGURE 14-16: WATCHDOG TIMER BLOCK DIAGRAM

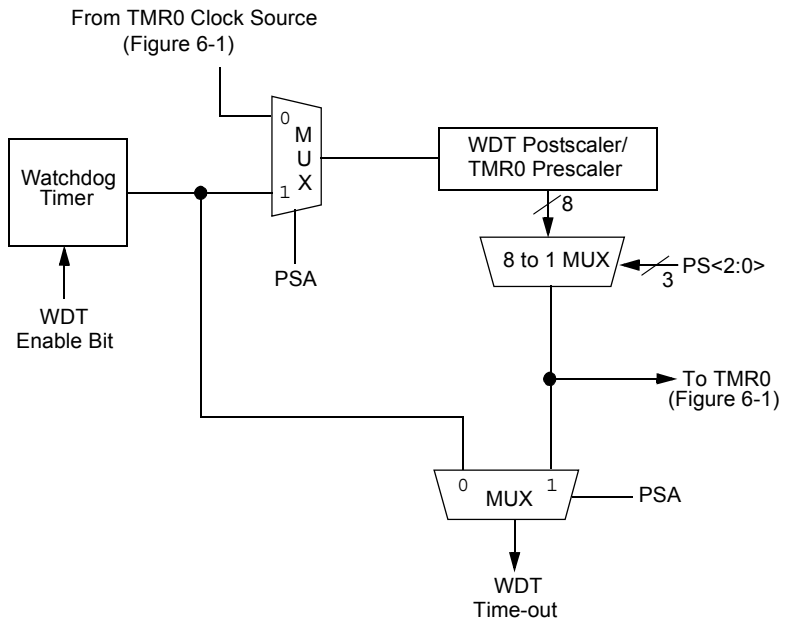

Note: T0SE, T0CS, PSA, PS0-PS2 are bits in the OPTION register.

TABLE 14-9: SUMMARY OF WATCHDOG TIMER REGISTERS

Address	Name	Bit 7	Bit 6	Bit 5	Bit 4	Bit 3	Bit 2	Bit 1	Bit 0	Value on POR Reset	Value on all other Resets
2007h	CONFIG	LVP	BOREN	MCLRE	FOSC2	$\overline{\text{PWRTE}}$	WDTE	FOSC1	FOSC0	uuuu uuuu	uuuu uuuu
81h, 181h	OPTION	$\overline{\text{RBPU}}$	INTEDG	T0CS	T0SE	PSA	PS2	PS1	PS0	1111 1111	1111 1111

Legend: x = unknown, u = unchanged, - = unimplemented read as '0', q = value depends upon condition.

Note: Shaded cells are not used by the Watchdog Timer.

14.8 Power-Down Mode (Sleep)

The Power-down mode is entered by executing a SLEEP instruction.

If enabled, the Watchdog Timer will be cleared but keeps running, the $\overline{\text{PD}}$ bit in the Status register is cleared, the $\overline{\text{TO}}$ bit is set, and the oscillator driver is turned off. The I/O ports maintain the status they had, before SLEEP was executed (driving high, low or high-impedance).

For lowest current consumption in this mode, all I/O pins should be either at V_{DD} or V_{SS} with no external circuitry drawing current from the I/O pin and the comparators, and V_{REF} should be disabled. I/O pins that are high-impedance inputs should be pulled high or low externally to avoid switching currents caused by floating inputs. The T0CKI input should also be at V_{DD} or V_{SS} for lowest current consumption. The contribution from on chip pull-ups on PORTB should be considered.

The $\overline{\text{MCLR}}$ pin must be at a logic high level (V_{IHMC}).

Note: It should be noted that a Reset generated by a WDT time-out does not drive $\overline{\text{MCLR}}$ pin low.

© 2009 Microchip Technology Inc.

14.8.1 WAKE-UP FROM SLEEP

The device can wake-up from Sleep through one of the following events:

1. External Reset input on $\overline{\text{MCLR}}$ pin
2. Watchdog Timer wake-up (if WDT was enabled)
3. Interrupt from RB0/INT pin, RB port change, or any peripheral interrupt, which is active in Sleep.

The first event will cause a device Reset. The two latter events are considered a continuation of program execution. The $\overline{\text{TO}}$ and $\overline{\text{PD}}$ bits in the Status register can be used to determine the cause of device Reset. $\overline{\text{PD}}$ bit, which is set on power-up, is cleared when Sleep is invoked. $\overline{\text{TO}}$ bit is cleared if WDT wake-up occurred.

When the `SLEEP` instruction is being executed, the next instruction (PC + 1) is pre-fetched. For the device to wake-up through an interrupt event, the corresponding interrupt enable bit must be set (enabled). Wake-up is regardless of the state of the GIE bit. If the GIE bit is clear (disabled), the device continues execution at the instruction after the `SLEEP` instruction. If the GIE bit is set (enabled), the device executes the instruction after the `SLEEP` instruction and then branches to the interrupt address (0004h). In cases where the execution of the instruction following `SLEEP` is not desirable, the user should have an `NOP` after the `SLEEP` instruction.

> **Note:** If the global interrupts are disabled (GIE is cleared), but any interrupt source has both its interrupt enable bit and the corresponding interrupt flag bits set, the device will not enter Sleep. The `SLEEP` instruction is executed as a `NOP` instruction.

The WDT is cleared when the device wakes up from Sleep, regardless of the source of wake-up.

FIGURE 14-17: WAKE-UP FROM SLEEP THROUGH INTERRUPT

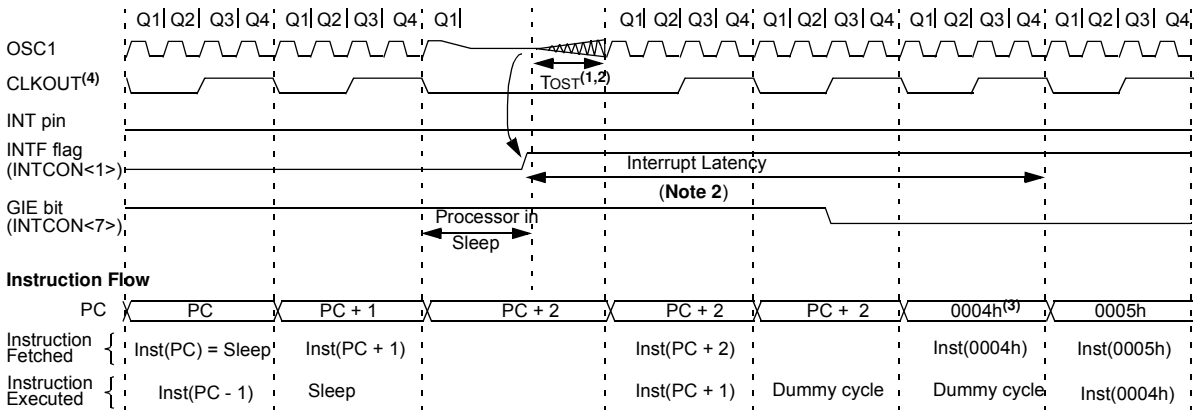

Note 1: XT, HS or LP Oscillator mode assumed.
2: TOST = 1024 TOSC (drawing not to scale). Approximately 1 µs delay will be there for RC Oscillator mode.
3: GIE = `1` assumed. In this case, after wake-up the processor jumps to the interrupt routine. If GIE = `0`, execution will continue in-line.
4: CLKOUT is not available in these Oscillator modes, but shown here for timing reference.

14.9 Code Protection

With the Code-Protect bit is cleared (Code-Protect enabled), the contents of the program memory locations are read out as '`0`'. See "*PIC16F627A/628A/648A EEPROM Memory Programming Specification*" (DS41196) for details.

> **Note:** Only a Bulk Erase function can set the $\overline{\text{CP}}$ and $\overline{\text{CPD}}$ bits by turning off the code protection. The entire data EEPROM and Flash program memory will be erased to turn the code protection off.

14.10 User ID Locations

Four memory locations (2000h-2003h) are designated as user ID locations where the user can store checksum or other code-identification numbers. These locations are not accessible during normal execution but are readable and writable during Program/Verify. Only the Least Significant 4 bits of the user ID locations are used for checksum calculations although each location has 14 bits.

14.11 In-Circuit Serial Programming™ (ICSP™)

The PIC16F627A/628A/648A microcontrollers can be serially programmed while in the end application circuit. This is simply done with two lines for clock and data, and three other lines for power, ground and the programming voltage. This allows customers to manufacture boards with unprogrammed devices and then program the microcontroller just before shipping the product. This also allows the most recent firmware or custom firmware to be programmed.

The device is placed into a Program/Verify mode by holding the RB6 and RB7 pins low while raising the $\overline{\text{MCLR}}$ (V_{PP}) pin from V_{IL} to V_{IHH}. See "*PIC16F627A/628A/648A EEPROM Memory Programming Specification*" (DS41196) for details. RB6 becomes the programming clock and RB7 becomes the programming data. Both RB6 and RB7 are Schmitt Trigger inputs in this mode.

After Reset, to place the device into Programming/Verify mode, the Program Counter (PC) is at location 00h. A 6-bit command is then supplied to the device. Depending on the command, 14 bits of program data are then supplied to or from the device, depending if the command was a load or a read. For complete details of serial programming, please refer to "*PIC16F627A/628A/648A EEPROM Memory Programming Specification*" (DS41196).

A typical In-Circuit Serial Programming connection is shown in Figure 14-18.

FIGURE 14-18: TYPICAL IN-CIRCUIT SERIAL PROGRAMMING CONNECTION

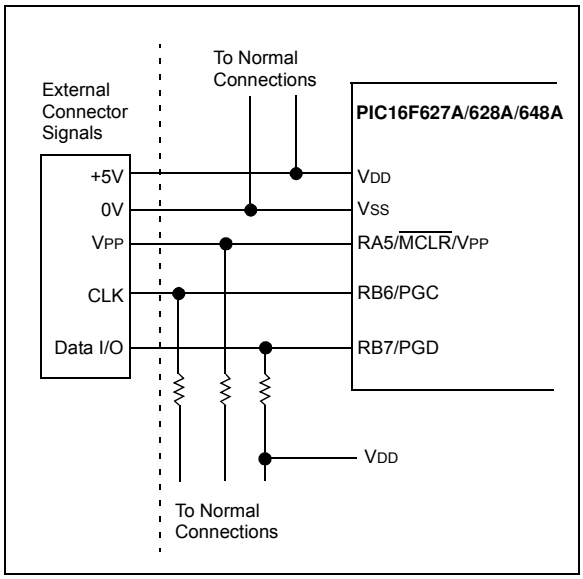

14.12 Low-Voltage Programming

The LVP bit of the Configuration Word, enables the low-voltage programming. This mode allows the microcontroller to be programmed via ICSP using only a 5V source. This mode removes the requirement of V_{IHH} to be placed on the $\overline{\text{MCLR}}$ pin. The LVP bit is normally erased to '1' which enables the low-voltage programming. In this mode, the RB4/PGM pin is dedicated to the programming function and ceases to be a general purpose I/O pin. The device will enter Programming mode when a '1' is placed on the RB4/PGM pin. The High-Voltage Programming mode is still available by placing V_{IHH} on the $\overline{\text{MCLR}}$ pin.

Note 1:	While in this mode, the RB4 pin can no longer be used as a general purpose I/O pin.
2:	V_{DD} must be 5.0V ±10% during erase operations.

If Low-Voltage Programming mode is not used, the LVP bit should be programmed to a '0' so that RB4/PGM becomes a digital I/O pin. To program the device, V_{IHH} must be placed onto $\overline{\text{MCLR}}$ during programming. The LVP bit may only be programmed when programming is entered with V_{IHH} on $\overline{\text{MCLR}}$. The LVP bit cannot be programmed when programming is entered with RB4/PGM.

It should be noted, that once the LVP bit is programmed to '0', only High-Voltage Programming mode can be used to program the device.

© 2009 Microchip Technology Inc.

14.13 In-Circuit Debugger

Since in-circuit debugging requires the loss of clock, data and $\overline{\text{MCLR}}$ pins, MPLAB® ICD 2 development with an 18-pin device is not practical. A special 28-pin PIC16F648A-ICD device is used with MPLAB ICD 2 to provide separate clock, data and $\overline{\text{MCLR}}$ pins and frees all normally available pins to the user. Debugging of all three versions of the PIC16F627A/628A/648A is supported by the PIC16F648A-ICD.

This special ICD device is mounted on the top of a header and its signals are routed to the MPLAB ICD 2 connector. On the bottom of the header is an 18-pin socket that plugs into the user's target via an 18-pin stand-off connector.

When the ICD pin on the PIC16F648A-ICD device is held low, the In-Circuit Debugger functionality is enabled. This function allows simple debugging functions when used with MPLAB ICD 2. When the microcontroller has this feature enabled, some of the resources are not available for general use. Table 14-19 shows which features are consumed by the background debugger.

TABLE 14-19: DEBUGGER RESOURCES

I/O pins	ICDCLK, ICDDATA
Stack	1 level
Program Memory	Address 0h must be `NOP` 300h-3FEh

The PIC16F648A-ICD device with header is supplied as an assembly. See Microchip Part Number AC162053.

NOTES:

© 2009 Microchip Technology Inc.

15.0 INSTRUCTION SET SUMMARY

Each PIC16F627A/628A/648A instruction is a 14-bit word divided into an OPCODE which specifies the instruction type and one or more operands which further specify the operation of the instruction. The PIC16F627A/628A/648A instruction set summary in Table 15-2 lists **byte-oriented**, **bit-oriented**, and **literal and control** operations. Table 15-1 shows the opcode field descriptions.

For **byte-oriented** instructions, 'f' represents a file register designator and 'd' represents a destination designator. The file register designator specifies which file register is to be used by the instruction.

The destination designator specifies where the result of the operation is to be placed. If 'd' is zero, the result is placed in the W register. If 'd' is one, the result is placed in the file register specified in the instruction.

For **bit-oriented** instructions, 'b' represents a bit field designator which selects the number of the bit affected by the operation, while 'f' represents the number of the file in which the bit is located.

For **literal and control** operations, 'k' represents an eight or eleven bit constant or literal value.

15.1 Read-Modify-Write Operations

Any instruction that specifies a file register as part of the instruction performs a Read-Modify-Write (R-M-W) operation. The register is read, the data is modified, and the result is stored according to either the instruction, or the destination designator 'd'. A read operation is performed on a register even if the instruction writes to that register.

For example, a "`clrf PORTB`" instruction will read PORTB, clear all the data bits, then write the result back to PORTB. This example would have the unintended result that the condition that sets the RBIF flag would be cleared for pins configured as inputs and using the PORTB interrupt-on-change feature.

TABLE 15-1: OPCODE FIELD DESCRIPTIONS

Field	Description
f	Register file address (0x00 to 0x7F)
W	Working register (accumulator)
b	Bit address within an 8-bit file register
k	Literal field, constant data or label
x	Don't care location (= 0 or 1) The assembler will generate code with x = 0. It is the recommended form of use for compatibility with all Microchip software tools.
d	Destination select; d = 0: store result in W, d = 1: store result in file register f. Default is d = 1
$\overline{TO}$	Time-out bit
$\overline{PD}$	Power-down bit

The instruction set is highly orthogonal and is grouped into three basic categories:

- **Byte-oriented** operations
- **Bit-oriented** operations
- **Literal and control** operations

All instructions are executed within one single instruction cycle, unless a conditional test is true or the program counter is changed as a result of an instruction. In this case, the execution takes two instruction cycles with the second cycle executed as a `NOP`. One instruction cycle consists of four oscillator periods. Thus, for an oscillator frequency of 4 MHz, the normal instruction execution time is 1 μs. If a conditional test is true or the program counter is changed as a result of an instruction, the instruction execution time is 2 μs.

Table 15-2 lists the instructions recognized by the MPASM™ assembler.

Figure 15-1 shows the three general formats that the instructions can have.

> **Note 1:** Any unused opcode is reserved. Use of any reserved opcode may cause unexpected operation.
>
> **2:** To maintain upward compatibility with future PIC MCU products, do not use the `OPTION` and `TRIS` instructions.

All examples use the following format to represent a hexadecimal number:

0xhh

where 'h' signifies a hexadecimal digit.

FIGURE 15-1: GENERAL FORMAT FOR INSTRUCTIONS

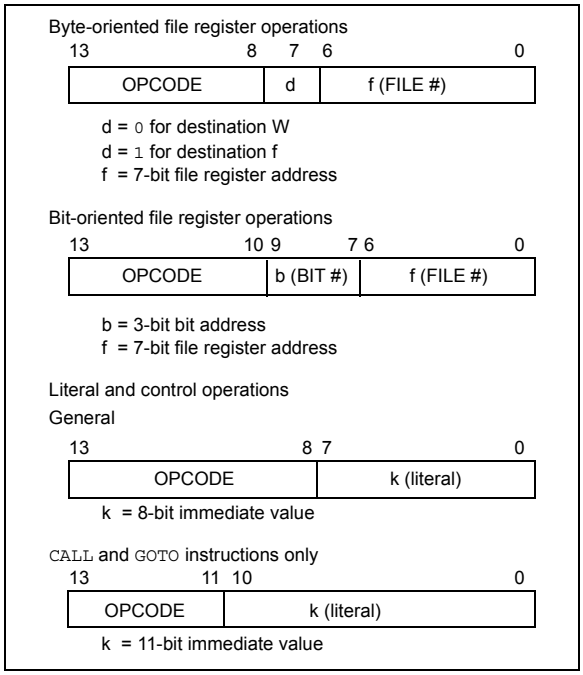

TABLE 15-2: PIC16F627A/628A/648A INSTRUCTION SET

Mnemonic, Operands		Description	Cycles	14-Bit Opcode MSb			LSb	Status Affected	Notes
BYTE-ORIENTED FILE REGISTER OPERATIONS									
ADDWF	f, d	Add W and f	1	00	0111	dfff	ffff	C,DC,Z	**1, 2**
ANDWF	f, d	AND W with f	1	00	0101	dfff	ffff	Z	**1, 2**
CLRF	f	Clear f	1	00	0001	1fff	ffff	Z	**2**
CLRW	—	Clear W	1	00	0001	0xxx	xxxx	Z	
COMF	f, d	Complement f	1	00	1001	dfff	ffff	Z	**1, 2**
DECF	f, d	Decrement f	1	00	0011	dfff	ffff	Z	**1, 2**
DECFSZ	f, d	Decrement f, Skip if 0	1(2)	00	1011	dfff	ffff		**1, 2, 3**
INCF	f, d	Increment f	1	00	1010	dfff	ffff	Z	**1, 2**
INCFSZ	f, d	Increment f, Skip if 0	1(2)	00	1111	dfff	ffff		**1, 2, 3**
IORWF	f, d	Inclusive OR W with f	1	00	0100	dfff	ffff	Z	**1, 2**
MOVF	f, d	Move f	1	00	1000	dfff	ffff	Z	**1, 2**
MOVWF	f	Move W to f	1	00	0000	1fff	ffff		
NOP	—	No Operation	1	00	0000	0xx0	0000		
RLF	f, d	Rotate Left f through Carry	1	00	1101	dfff	ffff	C	**1, 2**
RRF	f, d	Rotate Right f through Carry	1	00	1100	dfff	ffff	C	**1, 2**
SUBWF	f, d	Subtract W from f	1	00	0010	dfff	ffff	C,DC,Z	**1, 2**
SWAPF	f, d	Swap nibbles in f	1	00	1110	dfff	ffff		**1, 2**
XORWF	f, d	Exclusive OR W with f	1	00	0110	dfff	ffff	Z	**1, 2**
BIT-ORIENTED FILE REGISTER OPERATIONS									
BCF	f, b	Bit Clear f	1	01	00bb	bfff	ffff		**1, 2**
BSF	f, b	Bit Set f	1	01	01bb	bfff	ffff		**1, 2**
BTFSC	f, b	Bit Test f, Skip if Clear	1(2)	01	10bb	bfff	ffff		**3**
BTFSS	f, b	Bit Test f, Skip if Set	1(2)	01	11bb	bfff	ffff		**3**
LITERAL AND CONTROL OPERATIONS									
ADDLW	k	Add literal and W	1	11	111x	kkkk	kkkk	C,DC,Z	
ANDLW	k	AND literal with W	1	11	1001	kkkk	kkkk	Z	
CALL	k	Call subroutine	2	10	0kkk	kkkk	kkkk		
CLRWDT	—	Clear Watchdog Timer	1	00	0000	0110	0100	$\overline{TO}$,$\overline{PD}$	
GOTO	k	Go to address	2	10	1kkk	kkkk	kkkk		
IORLW	k	Inclusive OR literal with W	1	11	1000	kkkk	kkkk	Z	
MOVLW	k	Move literal to W	1	11	00xx	kkkk	kkkk		
RETFIE	—	Return from interrupt	2	00	0000	0000	1001		
RETLW	k	Return with literal in W	2	11	01xx	kkkk	kkkk		
RETURN	—	Return from Subroutine	2	00	0000	0000	1000		
SLEEP	—	Go into Standby mode	1	00	0000	0110	0011	$\overline{TO}$,$\overline{PD}$	
SUBLW	k	Subtract W from literal	1	11	110x	kkkk	kkkk	C,DC,Z	
XORLW	k	Exclusive OR literal with W	1	11	1010	kkkk	kkkk	Z	

Note 1: When an I/O register is modified as a function of itself (e.g., `MOVF PORTB, 1`), the value used will be that value present on the pins themselves. For example, if the data latch is '1' for a pin configured as input and is driven low by an external device, the data will be written back with a '0'.

2: If this instruction is executed on the TMR0 register (and, where applicable, d = 1), the prescaler will be cleared if assigned to the Timer0 Module.

3: If Program Counter (PC) is modified or a conditional test is true, the instruction requires two cycles. The second cycle is executed as a NOP.

© 2009 Microchip Technology Inc.

15.2 Instruction Descriptions

ADDLW	Add Literal and W
Syntax:	[*label*] ADDLW k
Operands:	$0 \le k \le 255$
Operation:	(W) + k → (W)
Status Affected:	C, DC, Z
Encoding:	`11` `111x` `kkkk` `kkkk`
Description:	The contents of the W register are added to the eight bit literal 'k' and the result is placed in the W register.
Words:	1
Cycles:	1
Example	`ADDLW 0x15` Before Instruction W = 0x10 After Instruction W = 0x25

ANDLW	AND Literal with W
Syntax:	[*label*] ANDLW k
Operands:	$0 \le k \le 255$
Operation:	(W) .AND. (k) → (W)
Status Affected:	Z
Encoding:	`11` `1001` `kkkk` `kkkk`
Description:	The contents of W register are AND'ed with the eight bit literal 'k'. The result is placed in the W register.
Words:	1
Cycles:	1
Example	`ANDLW 0x5F` Before Instruction W = 0xA3 After Instruction W = 0x03

ADDWF	Add W and f
Syntax:	[*label*] ADDWF f,d
Operands:	$0 \le f \le 127$ $d \in [0,1]$
Operation:	(W) + (f) → (dest)
Status Affected:	C, DC, Z
Encoding:	`00` `0111` `dfff` `ffff`
Description:	Add the contents of the W register with register 'f'. If 'd' is '`0`', the result is stored in the W register. If 'd' is '`1`', the result is stored back in register 'f'.
Words:	1
Cycles:	1
Example	`ADDWF REG1, 0` Before Instruction W = 0x17 REG1 = 0xC2 After Instruction W = 0xD9 REG1 = 0xC2 Z = 0 C = 0 DC = 0

ANDWF	AND W with f
Syntax:	[*label*] ANDWF f,d
Operands:	$0 \le f \le 127$ $d \in [0,1]$
Operation:	(W) .AND. (f) → (dest)
Status Affected:	Z
Encoding:	`00` `0101` `dfff` `ffff`
Description:	AND the W register with register 'f'. If 'd' is '`0`', the result is stored in the W register. If 'd' is '`1`', the result is stored back in register 'f'.
Words:	1
Cycles:	1
Example	`ANDWF REG1, 1` Before Instruction W = 0x17 REG1 = 0xC2 After Instruction W = 0x17 REG1 = 0x02

BCF	Bit Clear f
Syntax:	[*label*] BCF f,b
Operands:	$0 \le f \le 127$ $0 \le b \le 7$
Operation:	$0 \rightarrow$ (f<b>)
Status Affected:	None
Encoding:	01 | 00bb | bfff | ffff
Description:	Bit 'b' in register 'f' is cleared.
Words:	1
Cycles:	1
Example	`BCF REG1, 7` Before Instruction REG1 = 0xC7 After Instruction REG1 = 0x47

BSF	Bit Set f
Syntax:	[*label*] BSF f,b
Operands:	$0 \le f \le 127$ $0 \le b \le 7$
Operation:	$1 \rightarrow$ (f<b>)
Status Affected:	None
Encoding:	01 | 01bb | bfff | ffff
Description:	Bit 'b' in register 'f' is set.
Words:	1
Cycles:	1
Example	`BSF REG1, 7` Before Instruction REG1 = 0x0A After Instruction REG1 = 0x8A

BTFSC	Bit Test f, Skip if Clear
Syntax:	[*label*] BTFSC f,b
Operands:	$0 \le f \le 127$ $0 \le b \le 7$
Operation:	skip if (f<b>) = 0
Status Affected:	None
Encoding:	01 | 10bb | bfff | ffff
Description:	If bit 'b' in register 'f' is '0', then the next instruction is skipped. If bit 'b' is '0', then the next instruction fetched during the current instruction execution is discarded, and a NOP is executed instead, making this a two-cycle instruction.
Words:	1
Cycles:	1(2)

Example	`HERE BTFSC REG1`
	`FALSE GOTO PROCESS_CODE`
	`TRUE` •
	•
	•
	Before Instruction
	PC = address `HERE`
	After Instruction
	if REG<1> = `0`,
	PC = address `TRUE`
	if REG<1> =`1`,
	PC = address `FALSE`

© 2009 Microchip Technology Inc.

BTFSS	Bit Test f, Skip if Set
Syntax:	[*label*] BTFSS f,b
Operands:	$0 \le f \le 127$ $0 \le b < 7$
Operation:	skip if (f<b>) = 1
Status Affected:	None
Encoding:	01 | 11bb | bfff | ffff
Description:	If bit 'b' in register 'f' is '1', then the next instruction is skipped. If bit 'b' is '1', then the next instruction fetched during the current instruction execution, is discarded and a NOP is executed instead, making this a two-cycle instruction.
Words:	1
Cycles:	1(2)
Example	HERE BTFSS REG1 FALSE GOTO PROCESS_CODE TRUE • • • Before Instruction PC = address HERE After Instruction if FLAG<1> = 0, PC = address FALSE if FLAG<1> = 1, PC = address TRUE

CALL	Call Subroutine
Syntax:	[*label*] CALL k
Operands:	$0 \le k \le 2047$
Operation:	(PC)+ 1→ TOS, k → PC<10:0>, (PCLATH<4:3>) → PC<12:11>
Status Affected:	None
Encoding:	10 | 0kkk | kkkk | kkkk
Description:	Call Subroutine. First, return address (PC + 1) is pushed onto the stack. The eleven bit immediate address is loaded into PC bits <10:0>. The upper bits of the PC are loaded from PCLATH. CALL is a two-cycle instruction.
Words:	1
Cycles:	2
Example	HERE CALL THERE Before Instruction PC = Address HERE After Instruction PC = Address THERE TOS = Address HERE+1

CLRF	Clear f
Syntax:	[*label*] CLRF f
Operands:	$0 \le f \le 127$
Operation:	00h → (f) 1 → Z
Status Affected:	Z
Encoding:	00 | 0001 | 1fff | ffff
Description:	The contents of register 'f' are cleared and the Z bit is set.
Words:	1
Cycles:	1
Example	CLRF REG1 Before Instruction REG1 = 0x5A After Instruction REG1 = 0x00 Z = 1

CLRW — Clear W

Syntax:	[*label*] CLRW
Operands:	None
Operation:	00h → (W) 1 → Z
Status Affected:	Z
Encoding:	00 | 0001 | 0000 | 0011
Description:	W register is cleared. Zero bit (Z) is set.
Words:	1
Cycles:	1
Example	`CLRW` Before Instruction W = 0x5A After Instruction W = 0x00 Z = 1

CLRWDT — Clear Watchdog Timer

Syntax:	[*label*] CLRWDT
Operands:	None
Operation:	00h → WDT 0 → WDT prescaler, 1 → $\overline{TO}$ 1 → $\overline{PD}$
Status Affected:	$\overline{TO}$, $\overline{PD}$
Encoding:	00 | 0000 | 0110 | 0100
Description:	`CLRWDT` instruction resets the Watchdog Timer. It also resets the prescaler of the WDT. Status bits $\overline{TO}$ and $\overline{PD}$ are set.
Words:	1
Cycles:	1
Example	`CLRWDT` Before Instruction WDT counter = ? After Instruction WDT counter = 0x00 WDT prescaler = 0 $\overline{TO}$ = 1 $\overline{PD}$ = 1

COMF — Complement f

Syntax:	[*label*] COMF f,d
Operands:	$0 \le f \le 127$ $d \in [0,1]$
Operation:	$(\bar{f}) \rightarrow$ (dest)
Status Affected:	Z
Encoding:	00 | 1001 | dfff | ffff
Description:	The contents of register ‘f’ are complemented. If ‘d’ is ‘0’, the result is stored in W. If ‘d’ is ‘1’, the result is stored back in register ‘f’.
Words:	1
Cycles:	1
Example	`COMF REG1, 0` Before Instruction REG1 = 0x13 After Instruction REG1 = 0x13 W = 0xEC

DECF — Decrement f

Syntax:	[*label*] DECF f,d
Operands:	$0 \le f \le 127$ $d \in [0,1]$
Operation:	(f) - 1 → (dest)
Status Affected:	Z
Encoding:	00 | 0011 | dfff | ffff
Description:	Decrement register ‘f’. If ‘d’ is ‘0’. the result is stored in the W register. If ‘d’ is ‘1’, the result is stored back in register ‘f’.
Words:	1
Cycles:	1
Example	`DECF CNT, 1` Before Instruction CNT = 0x01 Z = 0 After Instruction CNT = 0x00 Z = 1

© 2009 Microchip Technology Inc.

DECFSZ — **Decrement f, Skip if 0**

Syntax:	[*label*] DECFSZ f,d
Operands:	$0 \le f \le 127$ $d \in [0,1]$
Operation:	(f) - 1 → (dest); skip if result = 0
Status Affected:	None
Encoding:	00 | 1011 | dfff | ffff
Description:	The contents of register 'f' are decremented. If 'd' is '0', the result is placed in the W register. If 'd' is '1', the result is placed back in register 'f'. If the result is '0', the next instruction, which is already fetched, is discarded. A NOP is executed instead making it a two-cycle instruction.
Words:	1
Cycles:	1(2)
Example	HERE DECFSZ REG1, 1 GOTO LOOP CONTINUE • • • Before Instruction PC = address HERE After Instruction REG1 = REG1 - 1 if REG1 = 0, PC = address CONTINUE if REG1 ≠ 0, PC = address HERE+1

GOTO — **Unconditional Branch**

Syntax:	[*label*] GOTO k
Operands:	$0 \le k \le 2047$
Operation:	k → PC<10:0> PCLATH<4:3> → PC<12:11>
Status Affected:	None
Encoding:	10 | 1kkk | kkkk | kkkk
Description:	GOTO is an unconditional branch. The eleven-bit immediate value is loaded into PC bits <10:0>. The upper bits of PC are loaded from PCLATH<4:3>. GOTO is a two-cycle instruction.
Words:	1
Cycles:	2
Example	GOTO THERE After Instruction PC = Address THERE

INCF	Increment f
Syntax:	[*label*] INCF f,d
Operands:	$0 \le f \le 127$ $d \in [0,1]$
Operation:	(f) + 1 → (dest)
Status Affected:	Z
Encoding:	00 | 1010 | dfff | ffff
Description:	The contents of register 'f' are incremented. If 'd' is '0', the result is placed in the W register. If 'd' is '1', the result is placed back in register 'f'.
Words:	1
Cycles:	1
Example	`INCF REG1, 1` Before Instruction REG1 = 0xFF Z = 0 After Instruction REG1 = 0x00 Z = 1

INCFSZ	Increment f, Skip if 0
Syntax:	[*label*] INCFSZ f,d
Operands:	$0 \le f \le 127$ $d \in [0,1]$
Operation:	(f) + 1 → (dest), skip if result = 0
Status Affected:	None
Encoding:	00 | 1111 | dfff | ffff
Description:	The contents of register 'f' are incremented. If 'd' is '0', the result is placed in the W register. If 'd' is '1', the result is placed back in register 'f'. If the result is '0', the next instruction, which is already fetched, is discarded. A NOP is executed instead making it a two-cycle instruction.
Words:	1
Cycles:	1(2)

Example	`HERE INCFSZ REG1, 1`
	`GOTO LOOP`
	`CONTINUE •`
	•
	•
	Before Instruction
	PC = address HERE
	After Instruction
	REG1 = REG1 + 1
	if CNT = 0,
	PC = address CONTINUE
	if REG1 ≠ 0,
	PC = address HERE +1

© 2009 Microchip Technology Inc.

IORLW	Inclusive OR Literal with W
Syntax:	[*label*] IORLW k
Operands:	$0 \le k \le 255$
Operation:	(W) .OR. k → (W)
Status Affected:	Z
Encoding:	11 | 1000 | kkkk | kkkk
Description:	The contents of the W register is OR'ed with the eight-bit literal 'k'. The result is placed in the W register.
Words:	1
Cycles:	1
Example	`IORLW 0x35` Before Instruction W = 0x9A After Instruction W = 0xBF Z = 0

MOVLW	Move Literal to W
Syntax:	[*label*] MOVLW k
Operands:	$0 \le k \le 255$
Operation:	k → (W)
Status Affected:	None
Encoding:	11 | 00xx | kkkk | kkkk
Description:	The eight bit literal 'k' is loaded into W register. The "don't cares" will assemble as '0's.
Words:	1
Cycles:	1
Example	`MOVLW 0x5A` After Instruction W = 0x5A

IORWF	Inclusive OR W with f
Syntax:	[*label*] IORWF f,d
Operands:	$0 \le f \le 127$ $d \in [0,1]$
Operation:	(W) .OR. (f) → (dest)
Status Affected:	Z
Encoding:	00 | 0100 | dfff | ffff
Description:	Inclusive OR the W register with register 'f'. If 'd' is '0', the result is placed in the W register. If 'd' is '1', the result is placed back in register 'f'.
Words:	1
Cycles:	1
Example	`IORWF REG1, 0` Before Instruction REG1 = 0x13 W = 0x91 After Instruction REG1 = 0x13 W = 0x93 Z = 1

MOVF	Move f
Syntax:	[*label*] MOVF f,d
Operands:	$0 \le f \le 127$ $d \in [0,1]$
Operation:	(f) → (dest)
Status Affected:	Z
Encoding:	00 | 1000 | dfff | ffff
Description:	The contents of register 'f' is moved to a destination dependent upon the status of 'd'. If d = 0, destination is W register. If d = 1, the destination is file register f itself. d = 1 is useful to test a file register since status flag Z is affected.
Words:	1
Cycles:	1
Example	`MOVF REG1, 0` After Instruction W = value in REG1 register Z = 1

MOVWF	Move W to f
Syntax:	[*label*] MOVWF f
Operands:	$0 \le f \le 127$
Operation:	(W) → (f)
Status Affected:	None
Encoding:	00 | 0000 | 1fff | ffff
Description:	Move data from W register to register 'f'.
Words:	1
Cycles:	1
Example	`MOVWF REG1`

Before Instruction
REG1 = 0xFF
W = 0x4F
After Instruction
REG1 = 0x4F
W = 0x4F

OPTION	Load Option Register
Syntax:	[*label*] OPTION
Operands:	None
Operation:	(W) → OPTION
Status Affected:	None
Encoding:	00 | 0000 | 0110 | 0010
Description:	The contents of the W register are loaded in the OPTION register. This instruction is supported for code compatibility with PIC16C5X products. Since OPTION is a readable/writable register, the user can directly address it. Using only register instruction such as `MOVWF`.
Words:	1
Cycles:	1
Example	

To maintain upward compatibility with future PIC® MCU products, do not use this instruction.

NOP	No Operation
Syntax:	[*label*] NOP
Operands:	None
Operation:	No operation
Status Affected:	None
Encoding:	00 | 0000 | 0xx0 | 0000
Description:	No operation.
Words:	1
Cycles:	1
Example	`NOP`

RETFIE	Return from Interrupt
Syntax:	[*label*] RETFIE
Operands:	None
Operation:	TOS → PC, 1 → GIE
Status Affected:	None
Encoding:	00 | 0000 | 0000 | 1001
Description:	Return from Interrupt. Stack is POPed and Top-of-Stack (TOS) is loaded in the PC. Interrupts are enabled by setting Global Interrupt Enable bit, GIE (INTCON<7>). This is a two-cycle instruction.
Words:	1
Cycles:	2
Example	`RETFIE`

After Interrupt
PC = TOS
GIE = 1

© 2009 Microchip Technology Inc.

RETLW	Return with Literal in W
Syntax:	[*label*] RETLW k
Operands:	$0 \le k \le 255$
Operation:	k → (W); TOS → PC
Status Affected:	None
Encoding:	11 | 01xx | kkkk | kkkk
Description:	The W register is loaded with the eight-bit literal 'k'. The program counter is loaded from the top of the stack (the return address). This is a two-cycle instruction.
Words:	1
Cycles:	2

Example

```
CALL TABLE;W contains table
    ;offset value
•   ;W now has table value
•
•
TABLE
ADDWF PC;W = offset
RETLW k1;Begin table
RETLW k2;
•
•
•
RETLW kn; End of table
```

Before Instruction
W = 0x07
After Instruction
W = value of k8

RETURN	Return from Subroutine
Syntax:	[*label*] RETURN
Operands:	None
Operation:	TOS → PC
Status Affected:	None
Encoding:	00 | 0000 | 0000 | 1000
Description:	Return from subroutine. The stack is POPed and the top of the stack (TOS) is loaded into the program counter. This is a two-cycle instruction.
Words:	1
Cycles:	2

Example

```
RETURN
```

After Interrupt
PC = TOS

RLF	Rotate Left f through Carry
Syntax:	[*label*] RLF f,d
Operands:	$0 \le f \le 127$ $d \in [0,1]$
Operation:	See description below
Status Affected:	C
Encoding:	00 | 1101 | dfff | ffff
Description:	The contents of register 'f' are rotated one bit to the left through the Carry Flag. If 'd' is '0', the result is placed in the W register. If 'd' is '1', the result is stored back in register 'f'.

Words:	1
Cycles:	1

Example

```
RLF     REG1, 0
```

Before Instruction
REG1=1110 0110
C = 0
After Instruction
REG1=1110 0110
W = 1100 1100
C = 1

RRF — Rotate Right f through Carry

Syntax:	[*label*] RRF f,d
Operands:	$0 \le f \le 127$ $d \in [0,1]$
Operation:	See description below
Status Affected:	C
Encoding:	00 | 1100 | dfff | ffff
Description:	The contents of register 'f' are rotated one bit to the right through the Carry Flag. If 'd' is '0', the result is placed in the W register. If 'd' is '1', the result is placed back in register 'f'.

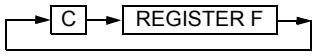

Words:	1
Cycles:	1
Example	`RRF REG1, 0`

Before Instruction
REG1 = 1110 0110
C = 0
After Instruction
REG1 = 1110 0110
W = 0111 0011
C = 0

SLEEP

Syntax:	[*label*] SLEEP
Operands:	None
Operation:	00h → WDT, 0 → $\overline{\text{WDT}}$ prescaler, 1 → $\overline{\text{TO}}$, 0 → $\overline{\text{PD}}$
Status Affected:	$\overline{\text{TO}}$, $\overline{\text{PD}}$
Encoding:	00 | 0000 | 0110 | 0011
Description:	The power-down Status bit, $\overline{\text{PD}}$ is cleared. Time out Status bit, $\overline{\text{TO}}$ is set. Watchdog Timer and its prescaler are cleared. The processor is put into Sleep mode with the oscillator stopped. See **Section 14.8 "Power-Down Mode (Sleep)"** for more details.
Words:	1
Cycles:	1
Example:	`SLEEP`

SUBLW — Subtract W from Literal

Syntax:	[*label*] SUBLW k
Operands:	$0 \le k \le 255$
Operation:	k - (W) → (W)
Status Affected:	C, DC, Z
Encoding:	11 | 110x | kkkk | kkkk
Description:	The W register is subtracted (2's complement method) from the eight-bit literal 'k'. The result is placed in the W register.
Words:	1
Cycles:	1

Example 1: `SUBLW 0x02`

Before Instruction
W = 1
C = ?
After Instruction
W = 1
C = 1; result is positive

Example 2: Before Instruction
W = 2
C = ?
After Instruction
W = 0
C = 1; result is zero

Example 3: Before Instruction
W = 3
C = ?
After Instruction
W = 0xFF
C = 0; result is negative

© 2009 Microchip Technology Inc.

SUBWF	Subtract W from f
Syntax:	[*label*] SUBWF f,d
Operands:	$0 \le f \le 127$ $d \in [0,1]$
Operation:	(f) - (W) → (dest)
Status Affected:	C, DC, Z
Encoding:	00 | 0010 | dfff | ffff
Description:	Subtract (2's complement method) W register from register 'f'. If 'd' is '0', the result is stored in the W register. If 'd' is '1', the result is stored back in register 'f'.
Words:	1
Cycles:	1
Example 1:	`SUBWF REG1, 1` Before Instruction REG1 = 3 W = 2 C = ? After Instruction REG1 = 1 W = 2 C = 1; result is positive DC = 1 Z = 0
Example 2:	Before Instruction REG1 = 2 W = 2 C = ? After Instruction REG1 = 0 W = 2 C = 1; result is zero Z = DC = 1
Example 3:	Before Instruction REG1 = 1 W = 2 C = ? After Instruction REG1 = 0xFF W = 2 C = 0; result is negative Z = DC = 0

SWAPF	Swap Nibbles in f
Syntax:	[*label*] SWAPF f,d
Operands:	$0 \le f \le 127$ $d \in [0,1]$
Operation:	(f<3:0>) → (dest<7:4>), (f<7:4>) → (dest<3:0>)
Status Affected:	None
Encoding:	00 | 1110 | dfff | ffff
Description:	The upper and lower nibbles of register 'f' are exchanged. If 'd' is '0', the result is placed in W register. If 'd' is '1', the result is placed in register 'f'.
Words:	1
Cycles:	1
Example	`SWAPF REG1, 0` Before Instruction REG1 = 0xA5 After Instruction REG1 = 0xA5 W = 0x5A

TRIS	Load TRIS Register
Syntax:	[*label*] TRIS f
Operands:	$5 \le f \le 7$
Operation:	(W) → TRIS register f;
Status Affected:	None
Encoding:	00 | 0000 | 0110 | 0fff
Description:	The instruction is supported for code compatibility with the PIC16C5X products. Since TRIS registers are readable and writable, the user can directly address them.
Words:	1
Cycles:	1
Example	**To maintain upward compatibility with future PIC® MCU products, do not use this instruction.**

XORLW	Exclusive OR Literal with W
Syntax:	[*label*] XORLW k
Operands:	$0 \le k \le 255$
Operation:	(W) .XOR. k → (W)
Status Affected:	Z
Encoding:	11 | 1010 | kkkk | kkkk
Description:	The contents of the W register are XOR'ed with the eight-bit literal 'k'. The result is placed in the W register.
Words:	1
Cycles:	1
Example:	`XORLW 0xAF` Before Instruction W = 0xB5 After Instruction W = 0x1A

XORWF	Exclusive OR W with f
Syntax:	[*label*] XORWF f,d
Operands:	$0 \le f \le 127$ $d \in [0,1]$
Operation:	(W) .XOR. (f) → (dest)
Status Affected:	Z
Encoding:	00 | 0110 | dfff | ffff
Description:	Exclusive OR the contents of the W register with register 'f'. If 'd' is '0', the result is stored in the W register. If 'd' is '1', the result is stored back in register 'f'.
Words:	1
Cycles:	1
Example	`XORWF REG1, 1` Before Instruction REG1 = 0xAF W = 0xB5 After Instruction REG1 = 0x1A W = 0xB5

© 2009 Microchip Technology Inc.

16.0 DEVELOPMENT SUPPORT

The PIC® microcontrollers and dsPIC® digital signal controllers are supported with a full range of software and hardware development tools:

- Integrated Development Environment
  - MPLAB® IDE Software
- Compilers/Assemblers/Linkers
  - MPLAB C Compiler for Various Device Families
  - HI-TECH C for Various Device Families
  - MPASM™ Assembler
  - MPLINK™ Object Linker/ MPLIB™ Object Librarian
  - MPLAB Assembler/Linker/Librarian for Various Device Families
- Simulators
  - MPLAB SIM Software Simulator
- Emulators
  - MPLAB REAL ICE™ In-Circuit Emulator
- In-Circuit Debuggers
  - MPLAB ICD 3
  - PICkit™ 3 Debug Express
- Device Programmers
  - PICkit™ 2 Programmer
  - MPLAB PM3 Device Programmer
- Low-Cost Demonstration/Development Boards, Evaluation Kits, and Starter Kits

16.1 MPLAB Integrated Development Environment Software

The MPLAB IDE software brings an ease of software development previously unseen in the 8/16/32-bit microcontroller market. The MPLAB IDE is a Windows® operating system-based application that contains:

- A single graphical interface to all debugging tools
  - Simulator
  - Programmer (sold separately)
  - In-Circuit Emulator (sold separately)
  - In-Circuit Debugger (sold separately)
- A full-featured editor with color-coded context
- A multiple project manager
- Customizable data windows with direct edit of contents
- High-level source code debugging
- Mouse over variable inspection
- Drag and drop variables from source to watch windows
- Extensive on-line help
- Integration of select third party tools, such as IAR C Compilers

The MPLAB IDE allows you to:

- Edit your source files (either C or assembly)
- One-touch compile or assemble, and download to emulator and simulator tools (automatically updates all project information)
- Debug using:
  - Source files (C or assembly)
  - Mixed C and assembly
  - Machine code

MPLAB IDE supports multiple debugging tools in a single development paradigm, from the cost-effective simulators, through low-cost in-circuit debuggers, to full-featured emulators. This eliminates the learning curve when upgrading to tools with increased flexibility and power.

16.2 MPLAB C Compilers for Various Device Families

The MPLAB C Compiler code development systems are complete ANSI C compilers for Microchip's PIC18, PIC24 and PIC32 families of microcontrollers and the dsPIC30 and dsPIC33 families of digital signal controllers. These compilers provide powerful integration capabilities, superior code optimization and ease of use.

For easy source level debugging, the compilers provide symbol information that is optimized to the MPLAB IDE debugger.

16.3 HI-TECH C for Various Device Families

The HI-TECH C Compiler code development systems are complete ANSI C compilers for Microchip's PIC family of microcontrollers and the dsPIC family of digital signal controllers. These compilers provide powerful integration capabilities, omniscient code generation and ease of use.

For easy source level debugging, the compilers provide symbol information that is optimized to the MPLAB IDE debugger.

The compilers include a macro assembler, linker, preprocessor, and one-step driver, and can run on multiple platforms.

16.4 MPASM Assembler

The MPASM Assembler is a full-featured, universal macro assembler for PIC10/12/16/18 MCUs.

The MPASM Assembler generates relocatable object files for the MPLINK Object Linker, Intel® standard HEX files, MAP files to detail memory usage and symbol reference, absolute LST files that contain source lines and generated machine code and COFF files for debugging.

The MPASM Assembler features include:

- Integration into MPLAB IDE projects
- User-defined macros to streamline assembly code
- Conditional assembly for multi-purpose source files
- Directives that allow complete control over the assembly process

16.5 MPLINK Object Linker/ MPLIB Object Librarian

The MPLINK Object Linker combines relocatable objects created by the MPASM Assembler and the MPLAB C18 C Compiler. It can link relocatable objects from precompiled libraries, using directives from a linker script.

The MPLIB Object Librarian manages the creation and modification of library files of precompiled code. When a routine from a library is called from a source file, only the modules that contain that routine will be linked in with the application. This allows large libraries to be used efficiently in many different applications.

The object linker/library features include:

- Efficient linking of single libraries instead of many smaller files
- Enhanced code maintainability by grouping related modules together
- Flexible creation of libraries with easy module listing, replacement, deletion and extraction

16.6 MPLAB Assembler, Linker and Librarian for Various Device Families

MPLAB Assembler produces relocatable machine code from symbolic assembly language for PIC24, PIC32 and dsPIC devices. MPLAB C Compiler uses the assembler to produce its object file. The assembler generates relocatable object files that can then be archived or linked with other relocatable object files and archives to create an executable file. Notable features of the assembler include:

- Support for the entire device instruction set
- Support for fixed-point and floating-point data
- Command line interface
- Rich directive set
- Flexible macro language
- MPLAB IDE compatibility

© 2009 Microchip Technology Inc.

16.7 MPLAB SIM Software Simulator

The MPLAB SIM Software Simulator allows code development in a PC-hosted environment by simulating the PIC MCUs and dsPIC® DSCs on an instruction level. On any given instruction, the data areas can be examined or modified and stimuli can be applied from a comprehensive stimulus controller. Registers can be logged to files for further run-time analysis. The trace buffer and logic analyzer display extend the power of the simulator to record and track program execution, actions on I/O, most peripherals and internal registers.

The MPLAB SIM Software Simulator fully supports symbolic debugging using the MPLAB C Compilers, and the MPASM and MPLAB Assemblers. The software simulator offers the flexibility to develop and debug code outside of the hardware laboratory environment, making it an excellent, economical software development tool.

16.8 MPLAB REAL ICE In-Circuit Emulator System

MPLAB REAL ICE In-Circuit Emulator System is Microchip's next generation high-speed emulator for Microchip Flash DSC and MCU devices. It debugs and programs PIC® Flash MCUs and dsPIC® Flash DSCs with the easy-to-use, powerful graphical user interface of the MPLAB Integrated Development Environment (IDE), included with each kit.

The emulator is connected to the design engineer's PC using a high-speed USB 2.0 interface and is connected to the target with either a connector compatible with in-circuit debugger systems (RJ11) or with the new high-speed, noise tolerant, Low-Voltage Differential Signal (LVDS) interconnection (CAT5).

The emulator is field upgradable through future firmware downloads in MPLAB IDE. In upcoming releases of MPLAB IDE, new devices will be supported, and new features will be added. MPLAB REAL ICE offers significant advantages over competitive emulators including low-cost, full-speed emulation, run-time variable watches, trace analysis, complex breakpoints, a ruggedized probe interface and long (up to three meters) interconnection cables.

16.9 MPLAB ICD 3 In-Circuit Debugger System

MPLAB ICD 3 In-Circuit Debugger System is Microchip's most cost effective high-speed hardware debugger/programmer for Microchip Flash Digital Signal Controller (DSC) and microcontroller (MCU) devices. It debugs and programs PIC® Flash microcontrollers and dsPIC® DSCs with the powerful, yet easy-to-use graphical user interface of MPLAB Integrated Development Environment (IDE).

The MPLAB ICD 3 In-Circuit Debugger probe is connected to the design engineer's PC using a high-speed USB 2.0 interface and is connected to the target with a connector compatible with the MPLAB ICD 2 or MPLAB REAL ICE systems (RJ-11). MPLAB ICD 3 supports all MPLAB ICD 2 headers.

16.10 PICkit 3 In-Circuit Debugger/ Programmer and PICkit 3 Debug Express

The MPLAB PICkit 3 allows debugging and programming of PIC® and dsPIC® Flash microcontrollers at a most affordable price point using the powerful graphical user interface of the MPLAB Integrated Development Environment (IDE). The MPLAB PICkit 3 is connected to the design engineer's PC using a full speed USB interface and can be connected to the target via an Microchip debug (RJ-11) connector (compatible with MPLAB ICD 3 and MPLAB REAL ICE). The connector uses two device I/O pins and the reset line to implement in-circuit debugging and In-Circuit Serial Programming™.

The PICkit 3 Debug Express include the PICkit 3, demo board and microcontroller, hookup cables and CDROM with user's guide, lessons, tutorial, compiler and MPLAB IDE software.

16.11 PICkit 2 Development Programmer/Debugger and PICkit 2 Debug Express

The PICkit™ 2 Development Programmer/Debugger is a low-cost development tool with an easy to use interface for programming and debugging Microchip's Flash families of microcontrollers. The full featured Windows® programming interface supports baseline (PIC10F, PIC12F5xx, PIC16F5xx), midrange (PIC12F6xx, PIC16F), PIC18F, PIC24, dsPIC30, dsPIC33, and PIC32 families of 8-bit, 16-bit, and 32-bit microcontrollers, and many Microchip Serial EEPROM products. With Microchip's powerful MPLAB Integrated Development Environment (IDE) the PICkit™ 2 enables in-circuit debugging on most PIC® microcontrollers. In-Circuit-Debugging runs, halts and single steps the program while the PIC microcontroller is embedded in the application. When halted at a breakpoint, the file registers can be examined and modified.

The PICkit 2 Debug Express include the PICkit 2, demo board and microcontroller, hookup cables and CDROM with user's guide, lessons, tutorial, compiler and MPLAB IDE software.

16.12 MPLAB PM3 Device Programmer

The MPLAB PM3 Device Programmer is a universal, CE compliant device programmer with programmable voltage verification at V_{DDMIN} and V_{DDMAX} for maximum reliability. It features a large LCD display (128 x 64) for menus and error messages and a modular, detachable socket assembly to support various package types. The ICSP™ cable assembly is included as a standard item. In Stand-Alone mode, the MPLAB PM3 Device Programmer can read, verify and program PIC devices without a PC connection. It can also set code protection in this mode. The MPLAB PM3 connects to the host PC via an RS-232 or USB cable. The MPLAB PM3 has high-speed communications and optimized algorithms for quick programming of large memory devices and incorporates an MMC card for file storage and data applications.

16.13 Demonstration/Development Boards, Evaluation Kits, and Starter Kits

A wide variety of demonstration, development and evaluation boards for various PIC MCUs and dsPIC DSCs allows quick application development on fully functional systems. Most boards include prototyping areas for adding custom circuitry and provide application firmware and source code for examination and modification.

The boards support a variety of features, including LEDs, temperature sensors, switches, speakers, RS-232 interfaces, LCD displays, potentiometers and additional EEPROM memory.

The demonstration and development boards can be used in teaching environments, for prototyping custom circuits and for learning about various microcontroller applications.

In addition to the PICDEM™ and dsPICDEM™ demonstration/development board series of circuits, Microchip has a line of evaluation kits and demonstration software for analog filter design, KEELOQ® security ICs, CAN, IrDA®, PowerSmart battery management, SEEVAL® evaluation system, Sigma-Delta ADC, flow rate sensing, plus many more.

Also available are starter kits that contain everything needed to experience the specified device. This usually includes a single application and debug capability, all on one board.

Check the Microchip web page (www.microchip.com) for the complete list of demonstration, development and evaluation kits.

© 2009 Microchip Technology Inc.

17.0 ELECTRICAL SPECIFICATIONS

Absolute Maximum Ratings(†)

Ambient temperature under bias ..... -40 to +125°C

Storage temperature ..... -65°C to +150°C

Voltage on V_{DD} with respect to V_{SS} ..... -0.3 to +6.5V

Voltage on $\overline{MCLR}$ and RA4 with respect to V_{SS} ..... -0.3 to +14V

Voltage on all other pins with respect to V_{SS} ..... -0.3V to V_{DD} + 0.3V

Total power dissipation(1) ..... 800 mW

Maximum current out of V_{SS} pin ..... 300 mA

Maximum current into V_{DD} pin ..... 250 mA

Input clamp current, I_{IK} (V_I < 0 or V_I > V_{DD}) ..... ± 20 mA

Output clamp current, I_{OK} (Vo < 0 or Vo >V_{DD}) ..... ± 20 mA

Maximum output current sunk by any I/O pin ..... 25 mA

Maximum output current sourced by any I/O pin ..... 25 mA

Maximum current sunk by PORTA and PORTB (Combined) ..... 200 mA

Maximum current sourced by PORTA and PORTB (Combined) ..... 200 mA

Note 1: Power dissipation is calculated as follows: $P_{DIS} = V_{DD} \times \{I_{DD} - \sum I_{OH}\} + \sum \{(V_{DD} - V_{OH}) \times I_{OH}\} + \sum(V_{OI} \times I_{OL})$

† NOTICE: Stresses above those listed under “Absolute Maximum Ratings” may cause permanent damage to the device. This is a stress rating only and functional operation of the device at those or any other conditions above those indicated in the operation listings of this specification is not implied. Exposure to maximum rating conditions for extended periods may affect device reliability.

Note: Voltage spikes below V_{SS} at the $\overline{MCLR}$ pin, inducing currents greater than 80 mA, may cause latch-up. Thus, a series resistor of 50-100 Ω should be used when applying a “low” level to the $\overline{MCLR}$ pin rather than pulling this pin directly to V_{SS}.

FIGURE 17-1: PIC16F627A/628A/648A VOLTAGE-FREQUENCY GRAPH, -40°C ≤ TA ≤ +125°C

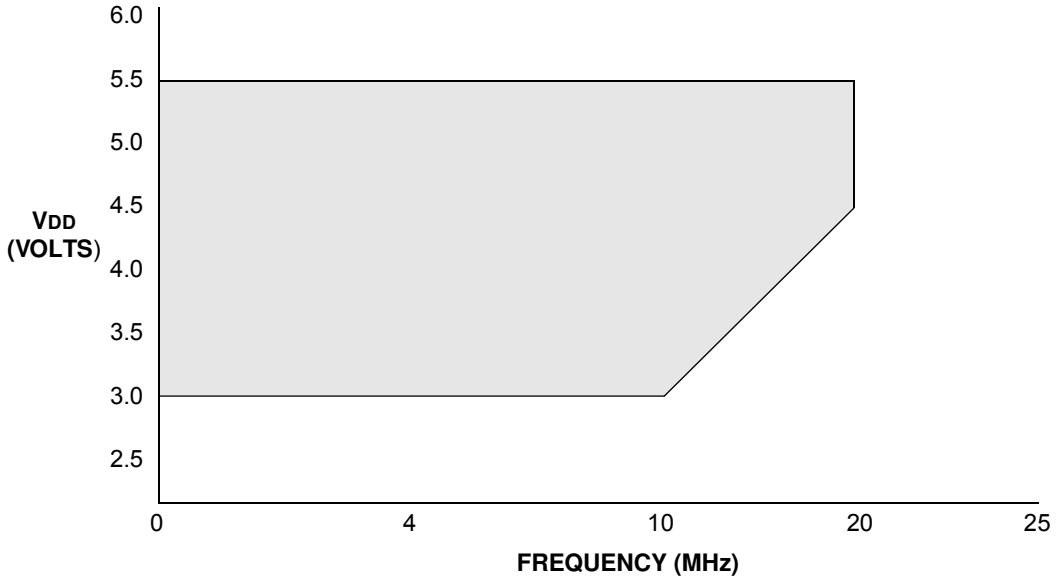

Note: The shaded region indicates the permissible combinations of voltage and frequency.

FIGURE 17-2: PIC16LF627A/628A/648A VOLTAGE-FREQUENCY GRAPH, -40°C ≤ TA ≤ +85°C

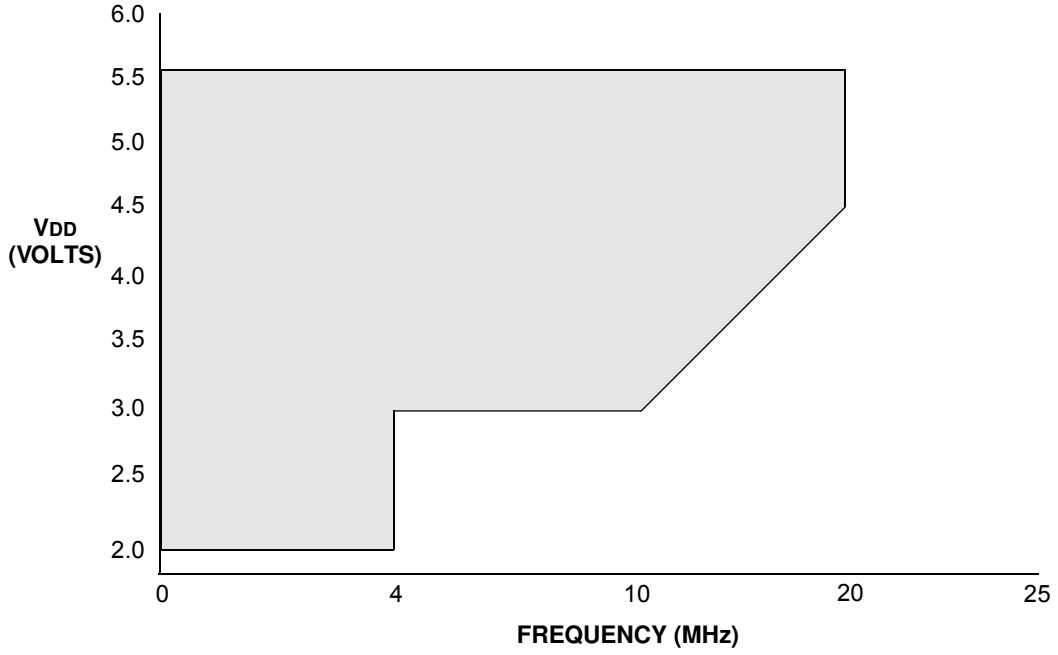

Note: The shaded region indicates the permissible combinations of voltage and frequency.

© 2009 Microchip Technology Inc.

17.1 DC Characteristics: PIC16F627A/628A/648A (Industrial, Extended) PIC16LF627A/628A/648A (Industrial)

PIC16LF627A/628A/648A (Industrial)	**Standard Operating Conditions (unless otherwise stated)** Operating temperature -40°C ≤ Ta ≤ +85°C for industrial
PIC16F627A/628A/648A (Industrial, Extended)	**Standard Operating Conditions (unless otherwise stated)** Operating temperature -40°C ≤ Ta ≤ +85°C for industrial and -40°C ≤ Ta ≤ +125°C for extended

Param No.	Sym	Characteristic/Device	Min	Typ†	Max	Units	Conditions
D001	VDD	**Supply Voltage**					
		PIC16LF627A/628A/648A	2.0	—	5.5	V	
		PIC16F627A/628A/648A	3.0	—	5.5	V	
D002	VDR	**RAM Data Retention Voltage(1)**	—	1.5*	—	V	Device in Sleep mode
D003	VPOR	**VDD Start Voltage** to ensure Power-on Reset	—	VSS	—	V	See **Section 14.4 "Power-on Reset (POR), Power-up Timer (PWRT), Oscillator Start-up Timer (OST) and Brown-out Reset (BOR)"**on Power-on Reset for details
D004	SVDD	**VDD Rise Rate** to ensure Power-on Reset	0.05*	—	—	V/ms	See **Section 14.4 "Power-on Reset (POR), Power-up Timer (PWRT), Oscillator Start-up Timer (OST) and Brown-out Reset (BOR)"** on Power-on Reset for details
D005	VBOR	**Brown-out Reset Voltage**	3.65	4.0	4.35	V	BOREN configuration bit is set
			3.65	4.0	4.4	V	BOREN configuration bit is set, Extended

Legend: Rows with standard voltage device data only are shaded for improved readability.

* These parameters are characterized but not tested.

† Data in "Typ" column is at 5.0V, 25°C, unless otherwise stated. These parameters are for design guidance only and are not tested.

Note 1: This is the limit to which VDD can be lowered in Sleep mode without losing RAM data.

17.2 DC Characteristics: PIC16F627A/628A/648A (Industrial) PIC16LF627A/628A/648A (Industrial)

DC CHARACTERISTICS		Standard Operating Conditions (unless otherwise stated) Operating temperature -40°C ≤ Ta ≤ +85°C for industrial					
Param No.	LF and F Device Characteristics	Min†	Typ	Max	Units	Conditions	
						VDD	Note
Supply Voltage (VDD)							
D001	LF	2.0	—	5.5	V	—	
	LF/F	3.0	—	5.5	V	—	
Power-down Base Current (IPD)							
D020	LF	—	0.01	0.80	μA	2.0	WDT, BOR, Comparators, VREF and T1OSC: disabled
	LF/F	—	0.01	0.85	μA	3.0	
		—	0.02	2.7	μA	5.0	
Peripheral Module Current (ΔIMOD)(1)							
D021	LF	—	1	2.0	μA	2.0	WDT Current
	LF/F	—	2	3.4	μA	3.0	
		—	9	17.0	μA	5.0	
D022	LF/F	—	29	52	μA	4.5	BOR Current
		—	30	55	μA	5.0	
D023	LF	—	15	22	μA	2.0	Comparator Current (Both comparators enabled)
	LF/F	—	22	37	μA	3.0	
		—	44	68	μA	5.0	
D024	LF	—	34	55	μA	2.0	VREF Current
	LF/F	—	50	75	μA	3.0	
		—	80	110	μA	5.0	
D025	LF	—	1.2	2.0	μA	2.0	T1OSC Current
	LF/F	—	1.3	2.2	μA	3.0	
		—	1.8	2.9	μA	5.0	
Supply Current (IDD)							
D010	LF	—	10	15	μA	2.0	FOSC = 32 kHz LP Oscillator Mode
	LF/F	—	15	25	μA	3.0	
		—	28	48	μA	5.0	
D011	LF	—	125	190	μA	2.0	FOSC = 1 MHz XT Oscillator Mode
	LF/F	—	175	340	μA	3.0	
		—	320	520	μA	5.0	
D012	LF	—	250	350	μA	2.0	FOSC = 4 MHz XT Oscillator Mode
	LF/F	—	450	600	μA	3.0	
		—	710	995	μA	5.0	
D012A	LF	—	395	465	μA	2.0	FOSC = 4 MHz INTOSC
	LF/F	—	565	785	μA	3.0	
		—	0.895	1.3	mA	5.0	
D013	LF/F	—	2.5	2.9	mA	4.5	FOSC = 20 MHz HS Oscillator Mode
		—	2.75	3.3	mA	5.0	

Note 1: The "Δ" current is the additional current consumed when this peripheral is enabled. This current should be added to the base IDD or IPD measurement. Max values should be used when calculating total current consumption.

© 2009 Microchip Technology Inc.

17.3 DC Characteristics: PIC16F627A/628A/648A (Extended)

DC CHARACTERISTICS		Standard Operating Conditions (unless otherwise stated) Operating temperature -40°C ≤ Ta ≤ +125°C for extended					
Param No.	**Device Characteristics**	**Min†**	**Typ**	**Max**	**Units**	**Conditions**	
						VDD	**Note**
Supply Voltage (VDD)							
D001	—	3.0	—	5.5	V	—	
Power-down Base Current (IPD)							
D020E	—	—	0.01	4	μA	3.0	WDT, BOR, Comparators, VREF and T1OSC: disabled
		—	0.02	8	μA	5.0	
Peripheral Module Current (ΔIMOD)(1)							
D021E	—	—	2	9	μA	3.0	WDT Current
		—	9	20	μA	5.0	
D022E	—	—	29	52	μA	4.5	BOR Current
		—	30	55	μA	5.0	
D023E	—	—	22	37	μA	3.0	Comparator Current (Both comparators enabled)
		—	44	68	μA	5.0	
D024E	—	—	50	75	μA	3.0	VREF Current
		—	83	110	μA	5.0	
D025E	—	—	1.3	4	μA	3.0	T1OSC Current
		—	1.8	6	μA	5.0	
Supply Current (IDD)							
D010E	—	—	15	28	μA	3.0	FOSC = 32 kHz LP Oscillator Mode
		—	28	54	μA	5.0	
D011E	—	—	175	340	μA	3.0	FOSC = 1 MHz XT Oscillator Mode
		—	320	520	μA	5.0	
D012E	—	—	450	650	μA	3.0	FOSC = 4 MHz XT Oscillator Mode
		—	0.710	1.1	mA	5.0	
D012AE	—	—	565	785	μA	3.0	FOSC = 4 MHz INTOSC
		—	0.895	1.3	mA	5.0	
D013E	—	—	2.5	2.9	mA	4.5	FOSC = 20 MHz HS Oscillator Mode
		—	2.75	3.5	mA	5.0	

Note 1: The "Δ" current is the additional current consumed when this peripheral is enabled. This current should be added to the base IDD or IPD measurement. Max values should be used when calculating total current consumption.

17.4 DC Characteristics: PIC16F627A/628A/648A (Industrial, Extended) PIC16LF627A/628A/648A (Industrial)

DC CHARACTERISTICS			Standard Operating Conditions (unless otherwise stated) Operating temperature -40°C ≤ TA ≤ +85°C for industrial and -40°C ≤ TA ≤ +125°C for extended Operating voltage VDD range as described in DC specification Table 17-2 and Table 17-3				
Param. No.	**Sym**	**Characteristic/Device**	**Min**	**Typ†**	**Max**	**Unit**	**Conditions**
	VIL	**Input Low Voltage**					
		I/O ports					
D030		with TTL buffer	VSS	—	0.8	V	VDD = 4.5V to 5.5V
			VSS	—	0.15 VDD	V	otherwise
D031		with Schmitt Trigger input(4)	VSS	—	0.2 VDD	V	
D032		$\overline{\text{MCLR}}$, RA4/T0CKI,OSC1 (in RC mode)	VSS	—	0.2 VDD	V	**(Note1)**
D033		OSC1 (in HS)	VSS	—	0.3 VDD	V	
		OSC1 (in LP and XT)	VSS	—	0.6	V	
	VIH	**Input High Voltage**					
		I/O ports					
D040		with TTL buffer	2.0V	—	VDD	V	VDD = 4.5V to 5.5V
			.25 VDD + 0.8V	—	VDD	V	otherwise
D041		with Schmitt Trigger input(4)	0.8 VDD	—	VDD	V	
D042		$\overline{\text{MCLR}}$ RA4/T0CKI	0.8 VDD	—	VDD	V	
D043		OSC1 (XT and LP)	1.3	—	VDD	V	
D043A		OSC1 (in RC mode)	0.9 VDD	—	VDD	V	**(Note1)**
D043B		OSC1 (in HS mode)	0.7 VDD		VDD	V	
D070	IPURB	**PORTB weak pull-up current**	50	200	400	μA	VDD = 5.0V, VPIN = VSS
	IIL	**Input Leakage Current(2), (3)**					
		I/O ports (Except PORTA)	—	—	±1.0	μA	VSS ≤ VPIN ≤ VDD, pin at high-impedance
D060		PORTA(4)	—	—	±0.5	μA	VSS ≤ VPIN ≤ VDD, pin at high-impedance
D061		RA4/T0CKI	—	—	±1.0	μA	VSS ≤ VPIN ≤ VDD
D063		OSC1, $\overline{\text{MCLR}}$	—	—	±5.0	μA	VSS ≤ VPIN ≤ VDD, XT, HS and LP oscillator configuration
	VOL	**Output Low Voltage**					
D080			—	—	0.6	V	IOL = 8.5 mA, VDD = 4.5 V, -40° to +85°C
		I/O ports(4)	—	—	0.6	V	IOL = 7.0 mA, VDD = 4.5 V, +85° to +125°C
	VOH	**Output High Voltage(3)**					
D090		I/O ports (Except RA4(4))	VDD – 0.7	—	—	V	IOH = -3.0 mA, VDD = 4.5 V, -40° to +85°C
			VDD – 0.7	—	—	V	IOH = -2.5 mA, VDD = 4.5 V, +85° to +125°C
D150	VOD	**Open-Drain High Voltage**	—	—	8.5*	V	RA4 pin PIC16F627A/628A/648A, PIC16LF627A/628A/648A
		Capacitive Loading Specs on Output Pins					
D100*	COSC2	OSC2 pin	—	—	15	pF	In XT, HS and LP modes when external clock used to drive OSC1.
D101*	CIO	All I/O pins/OSC2 (in RC mode)	—	—	50	pF	

* These parameters are characterized but not tested.

† Data in "Typ" column is at 5.0V, 25°C unless otherwise stated. These parameters are for design guidance only and are not tested.

Note 1: In RC oscillator configuration, the OSC1 pin is a Schmitt Trigger input. It is not recommended that the PIC16F627A/628A/648A be driven with external clock in RC mode.

2: The leakage current on the $\overline{\text{MCLR}}$ pin is strongly dependent on applied voltage level. The specified levels represent normal operating conditions. Higher leakage current may be measured at different input voltages.

3: Negative current is defined as coming out of the pin.

4: Includes OSC1 and OSC2 when configured as I/O pins, CLKIN or CLKOUT.

© 2009 Microchip Technology Inc.

TABLE 17-1: DC Characteristics: PIC16F627A/628A/648A (Industrial, Extended)
PIC16LF627A/628A/648A (Industrial)

DC CHARACTERISTICS			Standard Operating Conditions (unless otherwise stated) Operating temperature -40°C ≤ TA ≤ +85°C for industrial and -40°C ≤ TA ≤ +125°C for extended Operating voltage VDD range as described in DC specification Table 17-2 and Table 17-3				
Parameter No.	**Sym**	**Characteristic**	**Min**	**Typ†**	**Max**	**Units**	**Conditions**
		Data EEPROM Memory					
D120	ED	Endurance	100K	1M	—	E/W	-40°C ≤ TA ≤ 85°C
D120A	ED	Endurance	10K	100K		E/W	85°C ≤ TA ≤ 125°C
D121	VDRW	VDD for read/write	VMIN	—	5.5	V	VMIN = Minimum operating voltage
D122	TDEW	Erase/Write cycle time	—	4	8*	ms	
D123	TRETD	Characteristic Retention	40	—	—	Year	Provided no other specifications are violated
D124	TREF	Number of Total Erase/Write Cycles before Refresh(1)	1M	10M	—	E/W	-40°C to +85°C
		Program Flash Memory					
D130	EP	Endurance	10K	100K	—	E/W	-40°C ≤ TA ≤ 85°C
D130A	EP	Endurance	1000	10K	—	E/W	85°C ≤ TA ≤ 125°C
D131	VPR	VDD for read	VMIN	—	5.5	V	VMIN = Minimum operating voltage
D132	VIE	VDD for Block erase	4.5	—	5.5	V	
D132A	VPEW	VDD for write	VMIN	—	5.5	V	VMIN = Minimum operating voltage
D133	TIE	Block Erase cycle time	—	4	8*	ms	VDD > 4.5V
D133A	TPEW	Write cycle time	—	2	4*	ms	
D134	TRETP	Characteristic Retention	40	—	—	year	Provided no other specifications are violated

* These parameters are characterized but not tested.

† Data in "Typ" column is at 5.0V, 25°C unless otherwise stated. These parameters are for design guidance only and are not tested.

Note 1: Refer to **Section 13.7 "Using the Data EEPROM"** for a more detailed discussion on data EEPROM endurance.

TABLE 17-2: COMPARATOR SPECIFICATIONS

Operating Conditions: 2.0V < VDD <5.5V, -40°C < TA < +125°C, unless otherwise stated.							
Param No.	**Characteristics**	**Sym**	**Min**	**Typ**	**Max**	**Units**	**Comments**
D300	Input Offset Voltage	VIOFF	—	±5.0	±10	mV	
D301	Input Common Mode Voltage	VICM	0	—	VDD – 1.5*	V	
D302	Common Mode Rejection Ratio	CMRR	55*	—	—	db	
D303	Response Time(1)	TRESP	— — —	300 400 400	400* 600* 600*	ns ns ns	VDD = 3.0V to 5.5V -40° to +85°C VDD = 3.0V to 5.5V -85° to +125°C VDD = 2.0V to 3.0V -40° to +85°C
D304	Comparator Mode Change to Output Valid	TMC2OV	—	300	10*	μs	

* These parameters are characterized but not tested.

Note 1: Response time measured with one comparator input at (VDD – 1.5)/2, while the other input transitions from VSS to VDD.

TABLE 17-3: VOLTAGE REFERENCE SPECIFICATIONS

Operating Conditions: 2.0V < VDD < 5.5V, -40°C < TA < +125°C, unless otherwise stated.							
Spec No.	**Characteristics**	**Sym**	**Min**	**Typ**	**Max**	**Units**	**Comments**
D310	Resolution	VRES	—	—	VDD/24 VDD/32	LSb LSb	Low Range (VRR = 1) High Range (VRR = 0)
D311	Absolute Accuracy	VRAA	— —	— —	1/4(2)* 1/2(2)*	LSb LSb	Low Range (VRR = 1) High Range (VRR = 0)
D312	Unit Resistor Value (R)	VRUR	—	2k*	—	Ω	
D313	Settling Time(1)	TSET	—	—	10*	μs	

* These parameters are characterized but not tested.

Note 1: Settling time measured while VRR = 1 and VR<3:0> transitions from '0000' to '1111'.

2: When VDD is between 2.0V and 3.0V, the VREF output voltage levels on RA2 described by the equation:[VDD/2 ± (3 – VDD)/2] may cause the Absolute Accuracy (VRAA) of the VREF output signal on RA2 to be greater than the stated max.

© 2009 Microchip Technology Inc.

17.5 Timing Parameter Symbology

The timing parameter symbols have been created with one of the following formats:

1. TppS2ppS
2. TppS

T			
F	Frequency	T	Time

Lowercase subscripts (pp) and their meanings:

pp			
ck	CLKOUT	osc	OSC1
io	I/O port	t0	T0CKI
mc	$\overline{\text{MCLR}}$		

Uppercase letters and their meanings:

S			
F	Fall	P	Period
H	High	R	Rise
I	Invalid (High-impedance)	V	Valid
L	Low	Z	High-Impedance

FIGURE 17-3: LOAD CONDITIONS

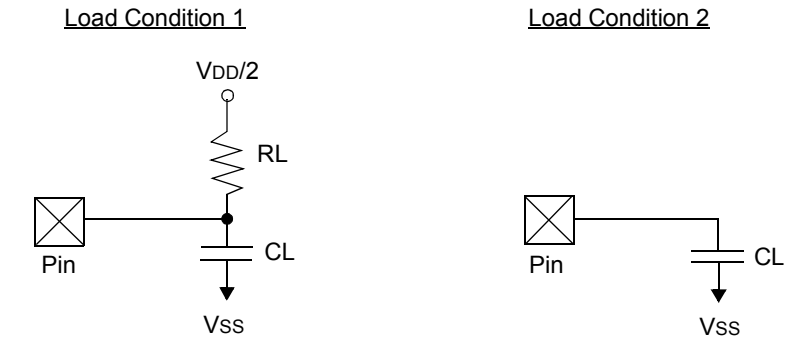

R_L = 464Ω

C_L = 50 pF for all pins except OSC2

15 pF for OSC2 output

17.6 Timing Diagrams and Specifications

FIGURE 17-4: EXTERNAL CLOCK TIMING

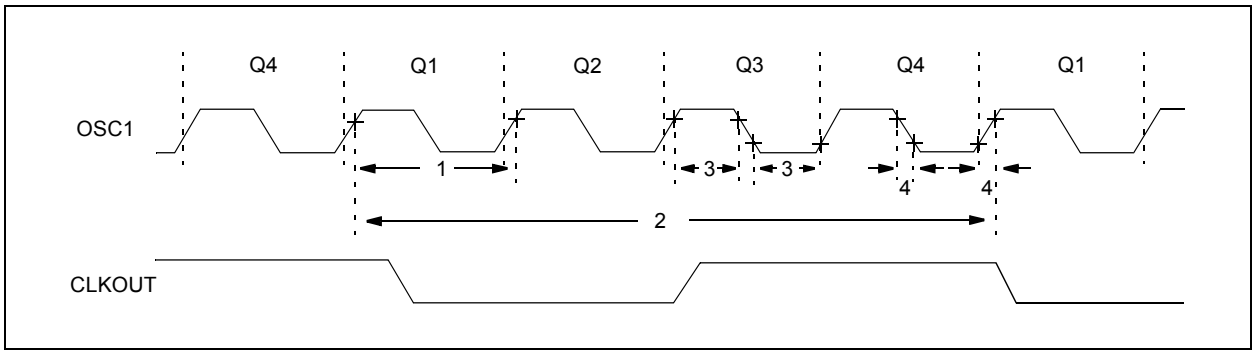

TABLE 17-4: EXTERNAL CLOCK TIMING REQUIREMENTS

Parameter No.	Sym	Characteristic	Min	Typ†	Max	Units	Conditions
	FOSC	External CLKIN Frequency(1)	DC	—	4	MHz	XT and RC Osc mode, VDD = 5.0 V
			DC	—	20	MHz	HS, EC Osc mode
			DC	—	200	kHz	LP Osc mode
		Oscillator Frequency(1)	—	—	4	MHz	RC Osc mode, VDD = 5.0V
			0.1	—	4	MHz	XT Osc mode
			1	—	20	MHz	HS Osc mode
			—	—	200	kHz	LP Osc mode
			—	4	—	MHz	INTOSC mode (fast)
			—	48	—	kHz	INTOSC mode (slow)
1	TOSC	External CLKIN Period(1)	250	—	—	ns	XT and RC Osc mode
			50	—	—	ns	HS, EC Osc mode
			5	—	—	μs	LP Osc mode
		Oscillator Period(1)	250	—	—	ns	RC Osc mode
			250	—	10,000	ns	XT Osc mode
			50	—	1,000	ns	HS Osc mode
			5	—	—	μs	LP Osc mode
			—	250	—	ns	INTOSC mode (fast)
			—	21	—	μs	INTOSC mode (slow)
2	TCY	Instruction Cycle Time	200	TCY	DC	ns	TCY = 4/FOSC
3	TosL, TosH	External CLKIN (OSC1) High External CLKIN Low	100*	—	—	ns	XT oscillator, TOSC L/H duty cycle
4	RC	External Biased RC Frequency	10 kHz*	—	4 MHz	—	VDD = 5.0V

* These parameters are characterized but not tested.

† Data in “Typ” column is at 5.0V, 25°C unless otherwise stated. These parameters are for design guidance only and are not tested.

Note 1: Instruction cycle period (TCY) equals four times the input oscillator time-based period. All specified values are based on characterization data for that particular oscillator type under standard operating conditions with the device executing code. Exceeding these specified limits may result in an unstable oscillator operation and/or higher than expected current consumption. All devices are tested to operate at “Min” values with an external clock applied to the OSC1 pin. When an external clock input is used, the “Max” cycle time limit is “DC” (no clock) for all devices.

© 2009 Microchip Technology Inc.

TABLE 17-5: PRECISION INTERNAL OSCILLATOR PARAMETERS

Parameter No.	Sym	Characteristic	Min	Typ	Max	Units	Conditions
F10	FIOSC	Oscillator Center frequency	—	4	—	MHz	
F13	ΔIOSC	Oscillator Accuracy	3.96	4	4.04	MHz	VDD = 3.5 V, 25°C
			3.92	4	4.08	MHz	2.0V ≤ VDD ≤ 5.5V 0°C ≤ TA ≤ +85°C
			3.80	4	4.20	MHz	2.0V ≤ VDD ≤ 5.5V -40°C ≤ TA ≤ +85°C (IND) -40°C ≤ TA ≤ +125°C (EXT)
F14*	TIOSCST	Oscillator Wake-up from Sleep start-up time	—	6	8	μs	VDD = 2.0V, -40°C to +85°C
			—	4	6	μs	VDD = 3.0V, -40°C to +85°C
			—	3	5	μs	VDD = 5.0V, -40°C to +85°C

Legend: TBD = To Be Determined.
* Characterized but not tested.

FIGURE 17-5: CLKOUT AND I/O TIMING

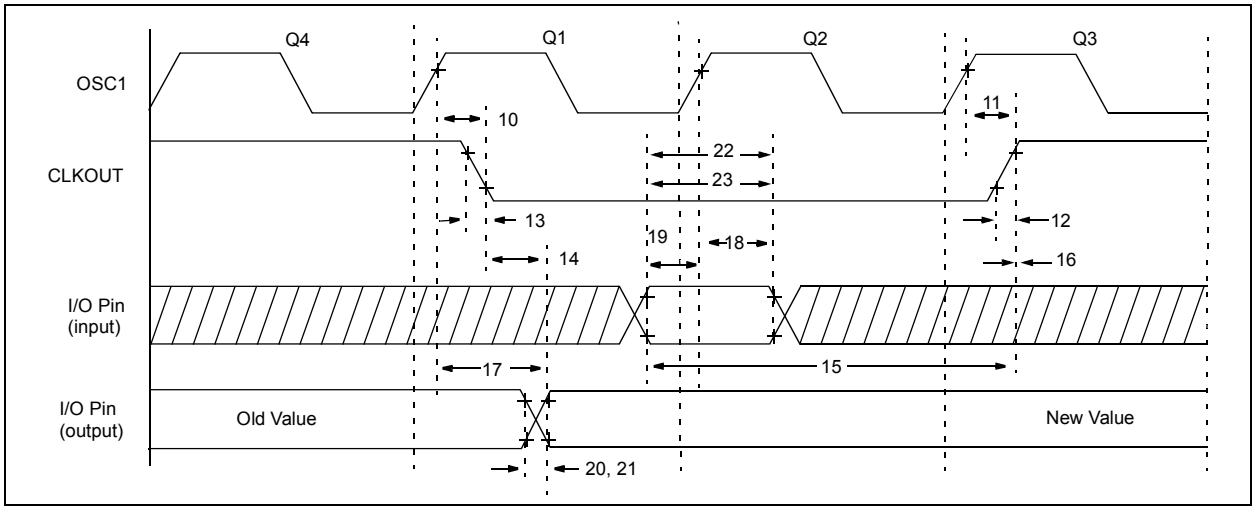

TABLE 17-6: CLKOUT AND I/O TIMING REQUIREMENTS

Parameter No.	Sym	Characteristic		Min	Typ†	Max	Units
10	TOSH2CKL	OSC1↑ to CLKOUT↓	PIC16F62XA	—	75	200*	ns
10A			PIC16LF62XA	—	—	400*	ns
11	TOSH2CKH	OSC1↑ to CLKOUT↑	PIC16F62XA	—	75	200*	ns
11A			PIC16LF62XA	—	—	400*	ns
12	TCKR	CLKOUT rise time	PIC16F62XA	—	35	100*	ns
12A			PIC16LF62XA	—	—	200*	ns
13	TCKF	CLKOUT fall time	PIC16F62XA	—	35	100*	ns
13A			PIC16LF62XA	—	—	200*	ns
14	TCKL2IOV	CLKOUT ↓ to Port out valid		—	—	20*	ns
15	TIOV2CKH	Port in valid before CLKOUT ↑	PIC16F62XA	TOSC+200 ns*	—	—	ns
			PIC16LF62XA	TOSC+400 ns*	—	—	ns
16	TCKH2IOI	Port in hold after CLKOUT ↑		0	—	—	ns
17	TOSH2IOV	OSC1↑ (Q1 cycle) to	PIC16F62XA	—	50	150*	ns
		Port out valid	PIC16LF62XA	—	—	300*	ns
18	TOSH2IOI	OSC1↑ (Q2 cycle) to Port input invalid (I/O in hold time)		100* 200*	—	—	ns

* These parameters are characterized but not tested.

† Data in "Typ" column is at 5.0V, 25°C unless otherwise stated. These parameters are for design guidance only and are not tested.

FIGURE 17-6: RESET, WATCHDOG TIMER, OSCILLATOR START-UP TIMER AND POWER-UP TIMER TIMING

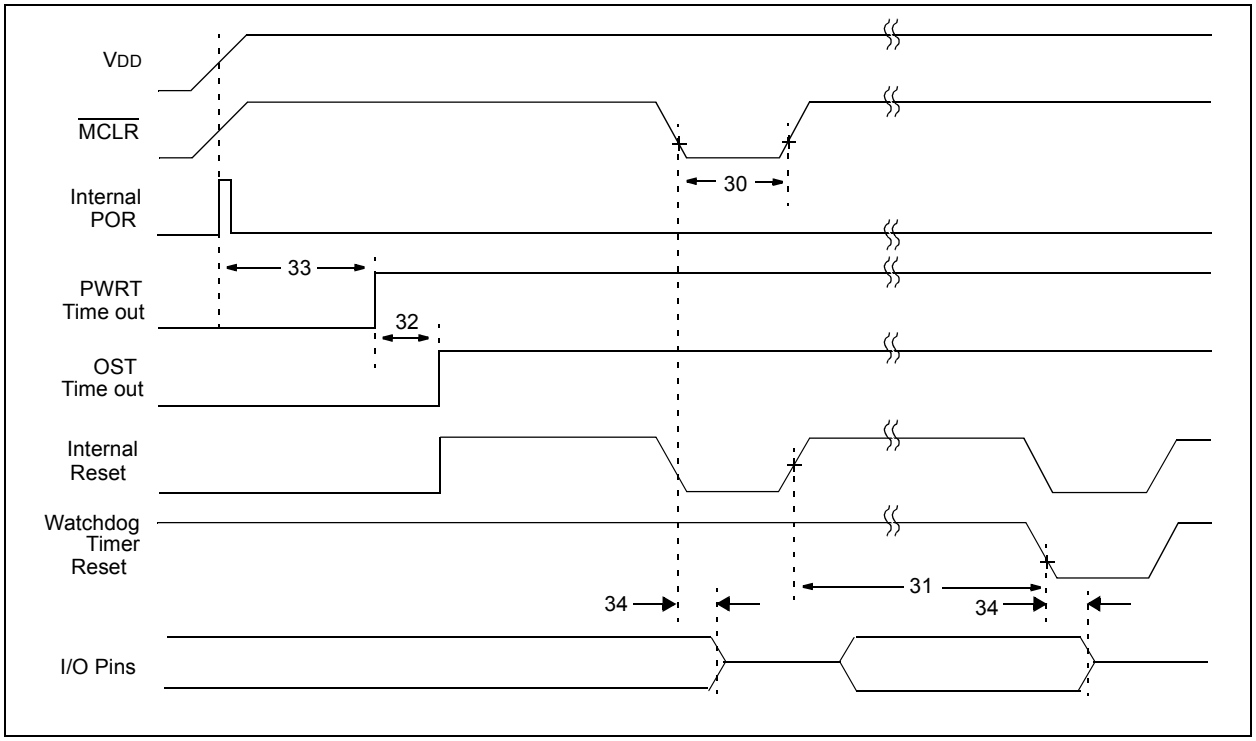

© 2009 Microchip Technology Inc.

FIGURE 17-7: BROWN-OUT RESET TIMING

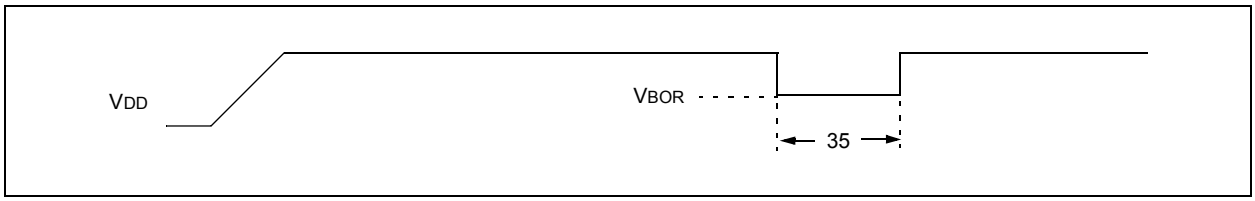

TABLE 17-7: RESET, WATCHDOG TIMER, OSCILLATOR START-UP TIMER AND POWER-UP TIMER REQUIREMENTS

Parameter No.	Sym	Characteristic	Min	Typ†	Max	Units	Conditions
30	TMCL	$\overline{\text{MCLR}}$ Pulse Width (low)	2000	—	—	ns	VDD = 5V, -40°C to +85°C
31	TWDT	Watchdog Timer Time out Period (No Prescaler)	7*	18	33*	ms	VDD = 5V, -40°C to +85°C
32	TOST	Oscillation Start-up Timer Period	—	1024 TOSC	—	—	TOSC = OSC1 period
33	TPWRT	Power-up Timer Period	28*	72	132*	ms	VDD = 5V, -40°C to +85°C
34	TIOZ	I/O High-impedance from $\overline{\text{MCLR}}$ Low or Watchdog Timer Reset	—	—	2.0*	μs	
35	TBOR	Brown-out Reset pulse width	100*	—	—	μs	VDD ≤ VBOR (D005)

Legend: TBD = To Be Determined.

* These parameters are characterized but not tested.

† Data in "Typ" column is at 5.0V, 25°C unless otherwise stated. These parameters are for design guidance only and are not tested.

FIGURE 17-8: TIMER0 AND TIMER1 EXTERNAL CLOCK TIMINGS

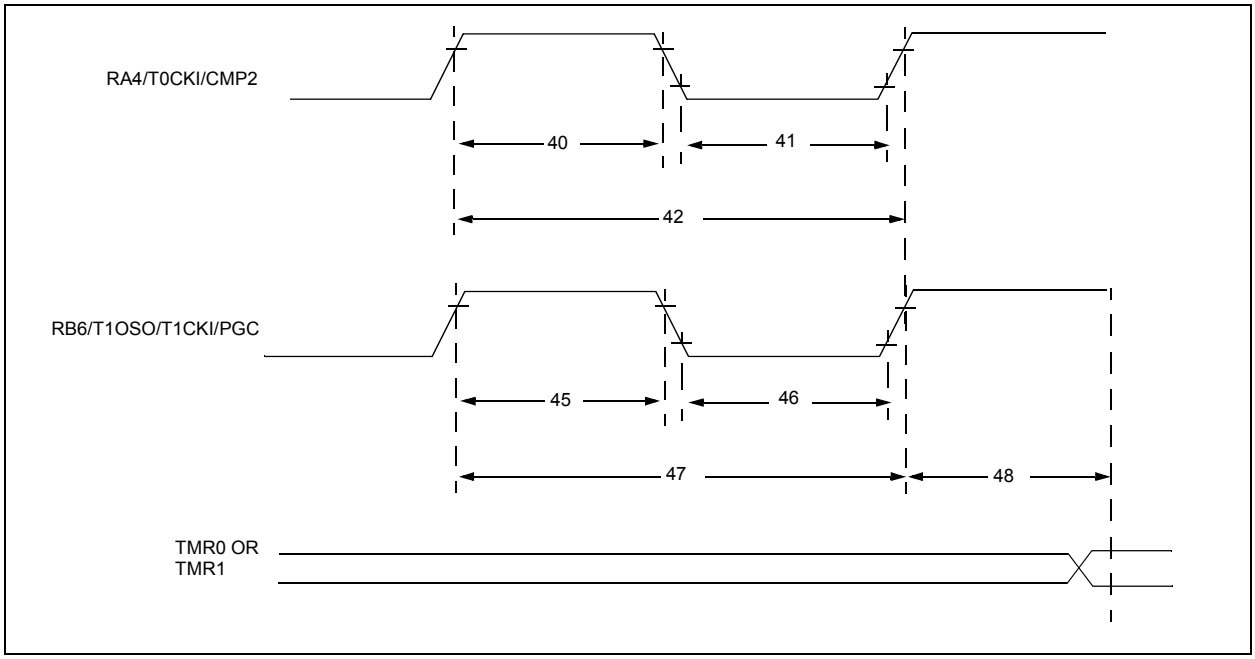

TABLE 17-8: TIMER0 AND TIMER1 EXTERNAL CLOCK REQUIREMENTS

Param No.	Sym	Characteristic			Min	Typ†	Max	Units	Conditions
40	TT0H	T0CKI High Pulse Width		No Prescaler	0.5TCY + 20*	—	—	ns	
				With Prescaler	10*	—	—	ns	
41	TT0L	T0CKI Low Pulse Width		No Prescaler	0.5TCY + 20*	—	—	ns	
				With Prescaler	10*	—	—	ns	
42	TT0P	T0CKI Period			Greater of: 20 or $\frac{T_{CY} + 40^*}{N}$	—	—	ns	N = prescale value (2, 4, ..., 256)
45	TT1H	T1CKI High Time	Synchronous, No Prescaler		0.5TCY + 20*	—	—	ns	
			Synchronous, with Prescaler	PIC16F62XA	15*	—	—	ns	
				PIC16LF62XA	25*	—	—	ns	
			Asynchronous	PIC16F62XA	30*	—	—	ns	
				PIC16LF62XA	50*	—	—	ns	
46	TT1L	T1CKI Low Time	Synchronous, No Prescaler		0.5TCY + 20*	—	—	ns	
			Synchronous, with Prescaler	PIC16F62XA	15*	—	—	ns	
				PIC16LF62XA	25*	—	—	ns	
			Asynchronous	PIC16F62XA	30*	—	—	ns	
				PIC16LF62XA	50*	—	—	ns	
47	TT1P	T1CKI input period	Synchronous	PIC16F62XA	Greater of: 20 or $\frac{T_{CY} + 40^*}{N}$	—	—	ns	N = prescale value (1, 2, 4, 8)
				PIC16LF62XA	Greater of: 20 or $\frac{T_{CY} + 40^*}{N}$	—	—	—	
			Asynchronous	PIC16F62XA	60*	—	—	ns	
				PIC16LF62XA	100*	—	—	ns	
	FT1	Timer1 oscillator input frequency range (oscillator enabled by setting bit T1OSCEN)			—	32.7(1)	—	kHz	
48	TCKEZTMR1	Delay from external clock edge to timer increment			2TOSC	—	7TOSC	—	

* These parameters are characterized but not tested.

† Data in “Typ” column is at 5V, 25°C unless otherwise stated. These parameters are for design guidance only and are not tested.

Note 1: This oscillator is intended to work only with 32.768 kHz watch crystals and their manufactured tolerances. Higher value crystal frequencies may not be compatible with this crystal driver.

© 2009 Microchip Technology Inc.

FIGURE 17-9: CAPTURE/COMPARE/PWM TIMINGS

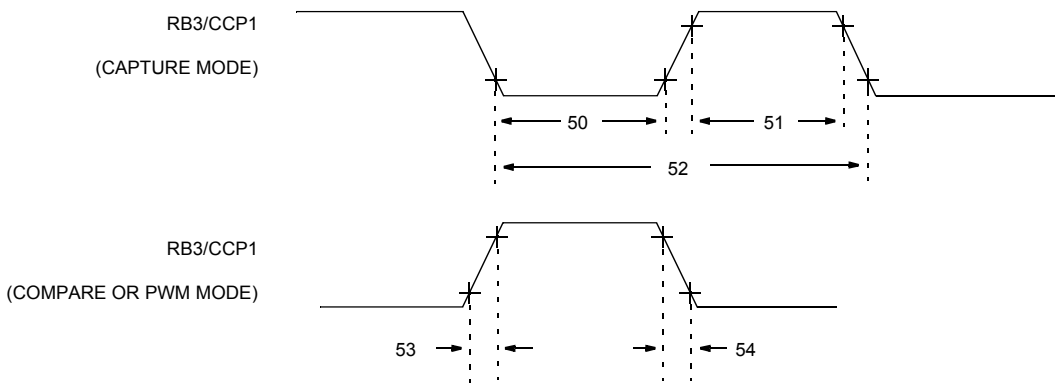

TABLE 17-9: CAPTURE/COMPARE/PWM REQUIREMENTS

Param No.	Sym	Characteristic			Min	Typ†	Max	Units	Conditions
50	TccL	CCP input low time	No Prescaler		0.5TCY + 20*	—	—	ns	
			With Prescaler	PIC16F62XA	10*	—	—	ns	
				PIC16LF62XA	20*	—	—	ns	
51	TccH	CCP input high time	No Prescaler		0.5TCY + 20*	—	—	ns	
			With Prescaler	PIC16F62XA	10*	—	—	ns	
				PIC16LF62XA	20*	—	—	ns	
52	TccP	CCP input period			3TCY + 40* / N	—	—	ns	N = prescale value (1,4 or 16)
53	TccR	CCP output rise time		PIC16F62XA		10	25*	ns	
				PIC16LF62XA		25	45*	ns	
54	TccF	CCP output fall time		PIC16F62XA		10	25*	ns	
				PIC16LF62XA		25	45*	ns	

* These parameters are characterized but not tested.

† Data in “Typ” column is at 5V, 25°C unless otherwise stated. These parameters are for design guidance only and are not tested.

NOTES:

© 2009 Microchip Technology Inc.

18.0 DC AND AC CHARACTERISTICS GRAPHS AND TABLES

The graphs and tables provided in this section are for **design guidance** and are **not tested**.

In some graphs or tables, the data presented are **outside specified operating range** (i.e., outside specified VDD range). This is for **information only** and devices are ensured to operate properly only within the specified range.

The data presented in this section is a **statistical summary** of data collected on units from different lots over a period of time and matrix samples. 'Typical' represents the mean of the distribution at 25°C. 'Max' or 'Min' represents (mean + 3σ) or (mean - 3σ) respectively, where σ is standard deviation, over the whole temperature range.

FIGURE 18-1: TYPICAL BASELINE IPD vs. VDD (-40°C TO 25°C)

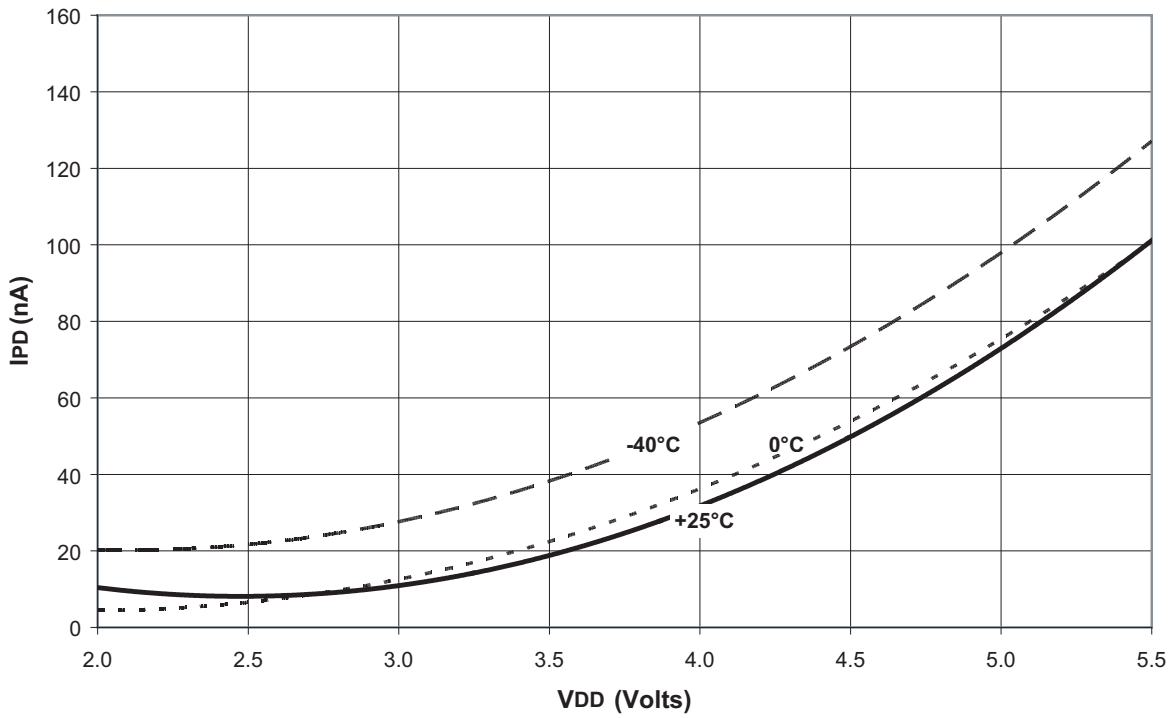

FIGURE 18-2: TYPICAL BASELINE IPD vs. VDD (85°C)

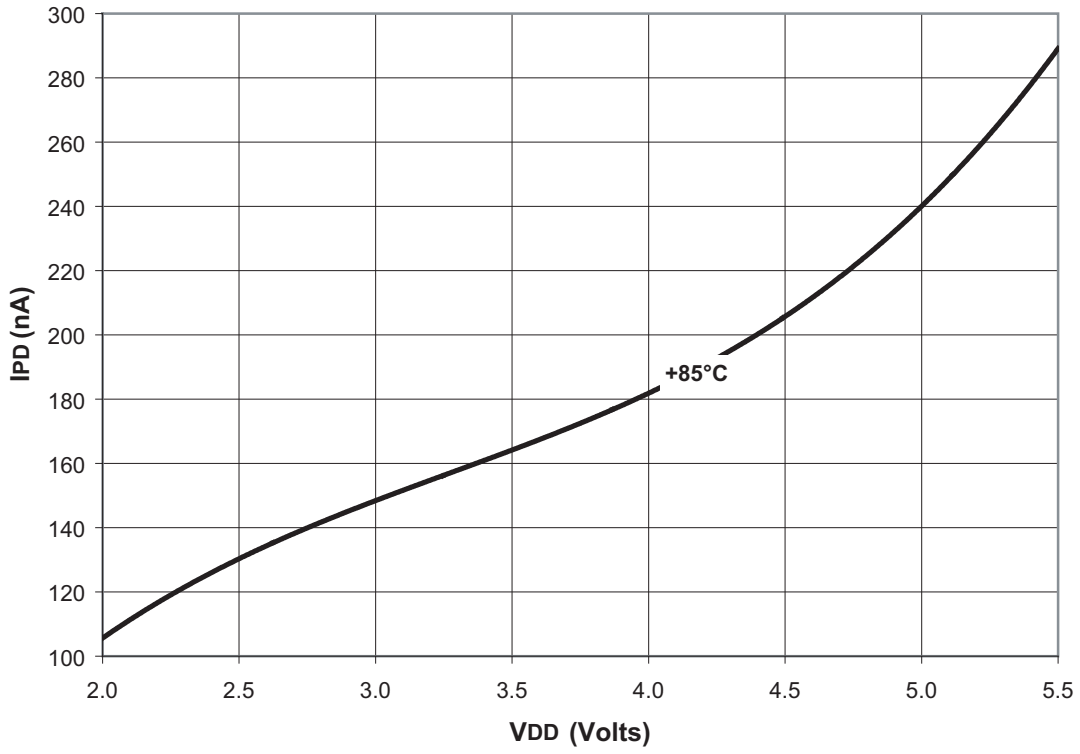

FIGURE 18-3: TYPICAL BASELINE CURRENT IPD vs. VDD (125°C)

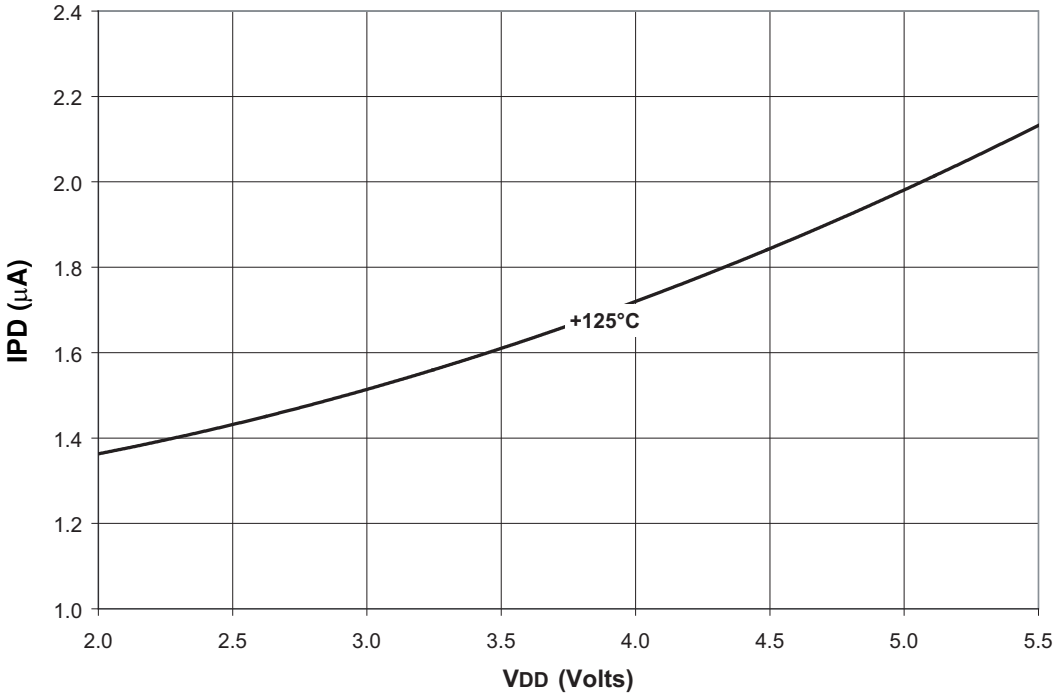

© 2009 Microchip Technology Inc.

FIGURE 18-4: TYPICAL BOR IPD vs. VDD

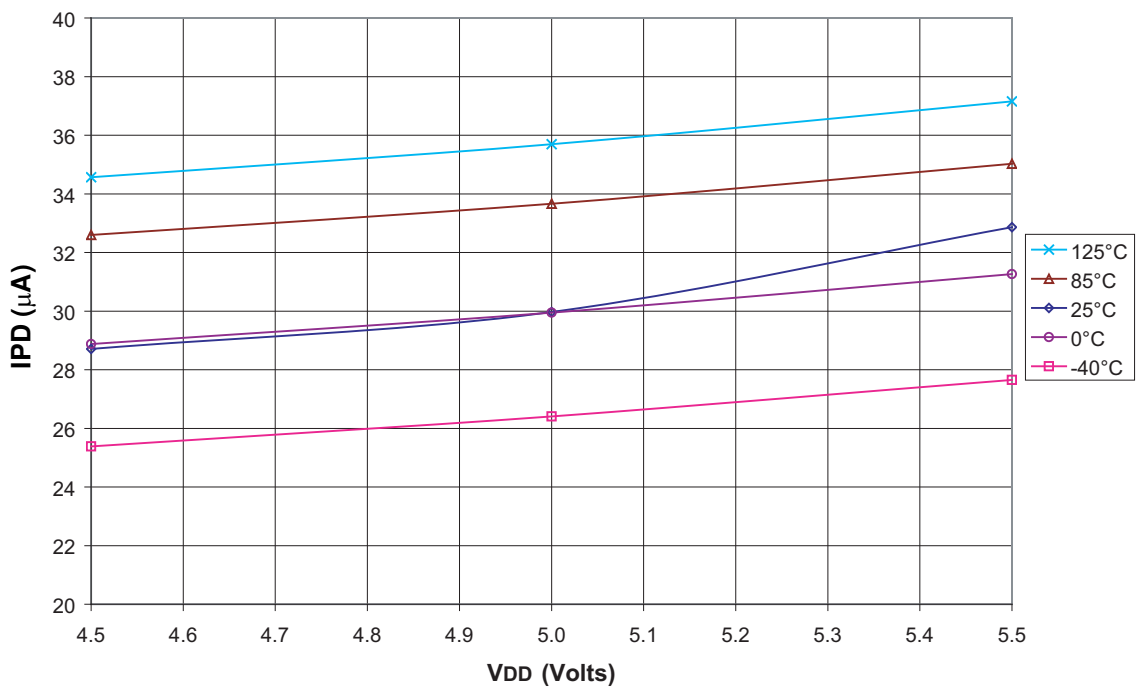

FIGURE 18-5: TYPICAL SINGLE COMPARATOR IPD vs. VDD

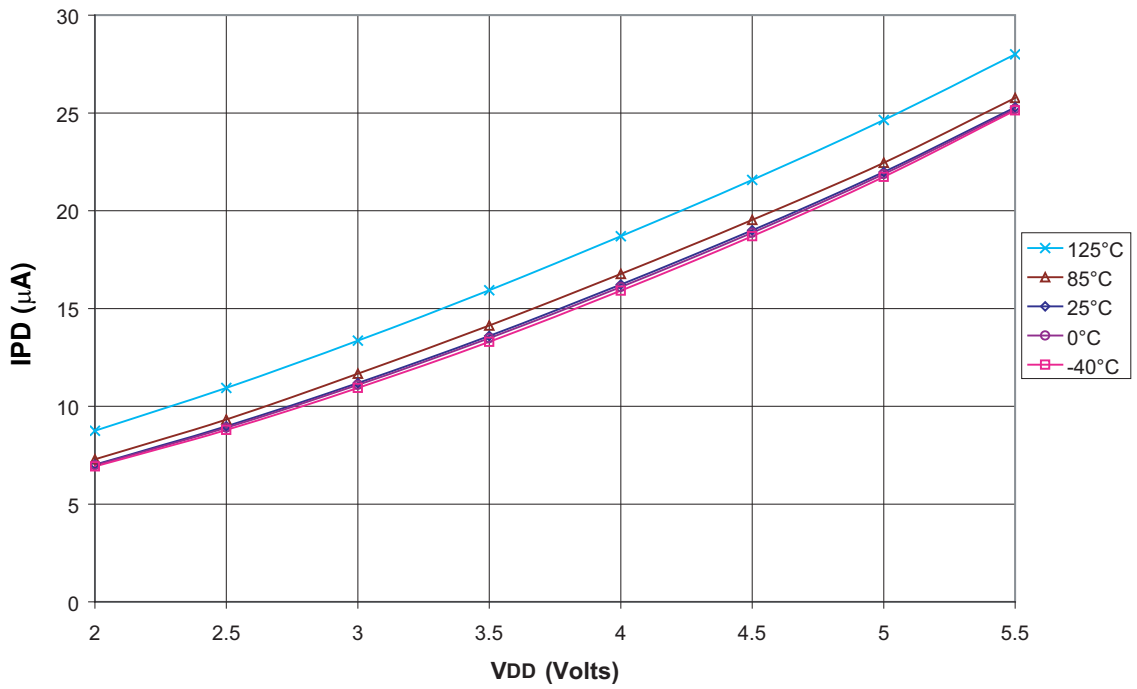

FIGURE 18-6: TYPICAL VREF IPD vs. VDD

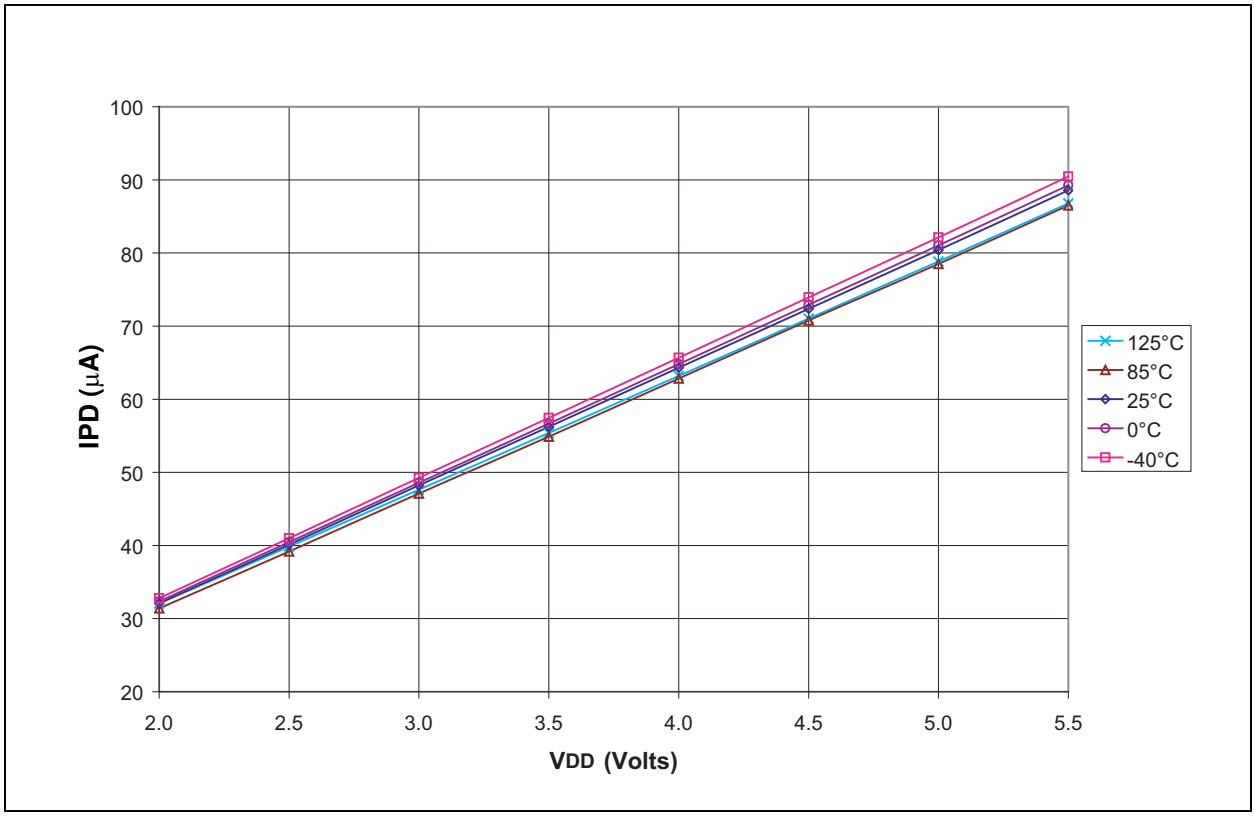

FIGURE 18-7: TYPICAL WDT IPD vs. VDD

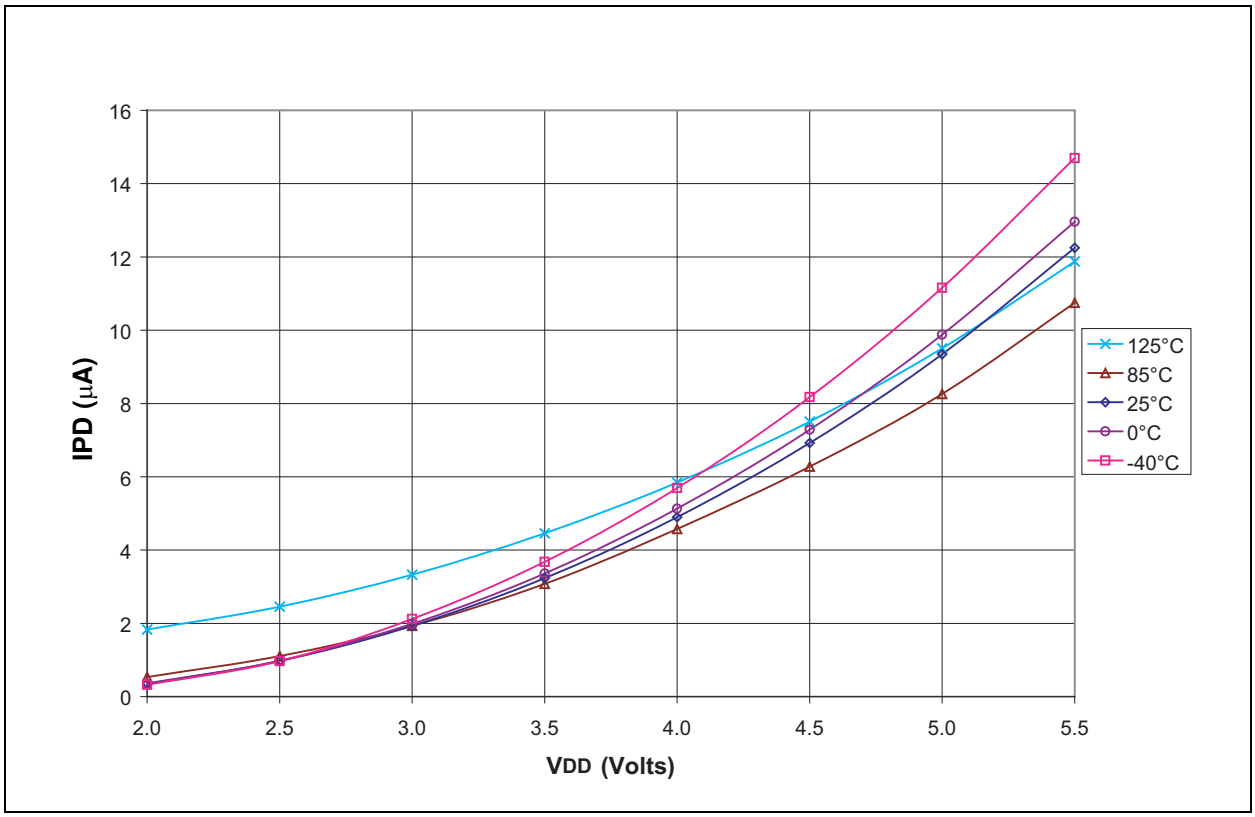

© 2009 Microchip Technology Inc.

FIGURE 18-8: AVERAGE IPD_TIMER1

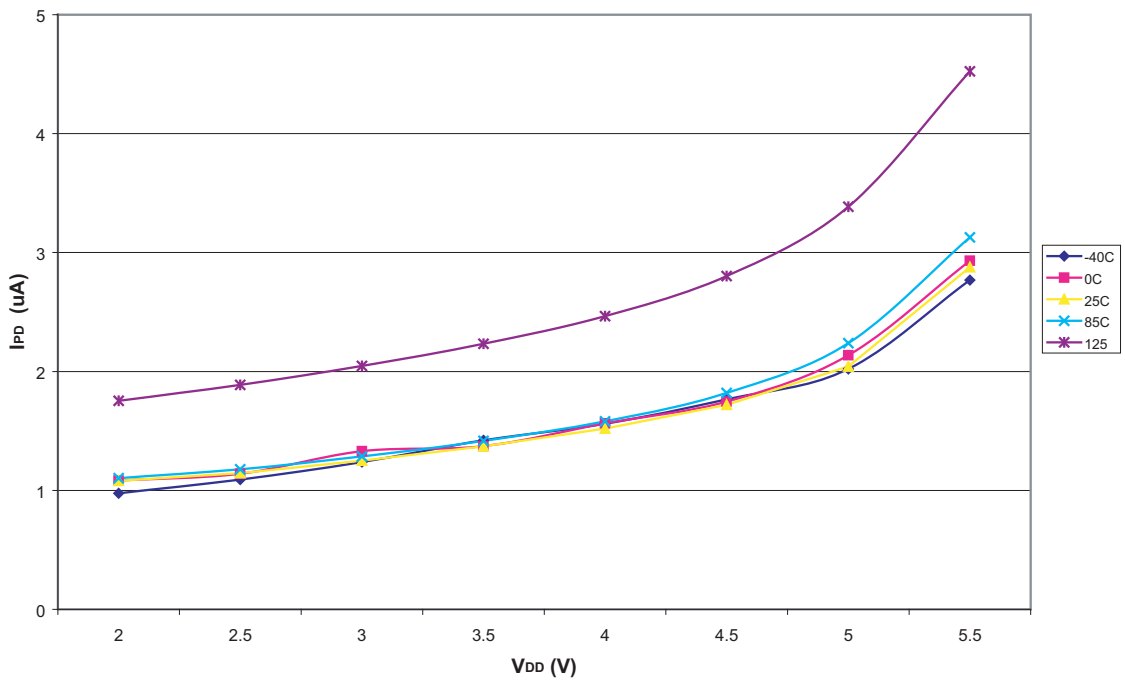

FIGURE 18-9: TYPICAL INTERNAL OSCILLATOR FREQUENCY vs. TEMPERATURE VDD = 5 VOLTS

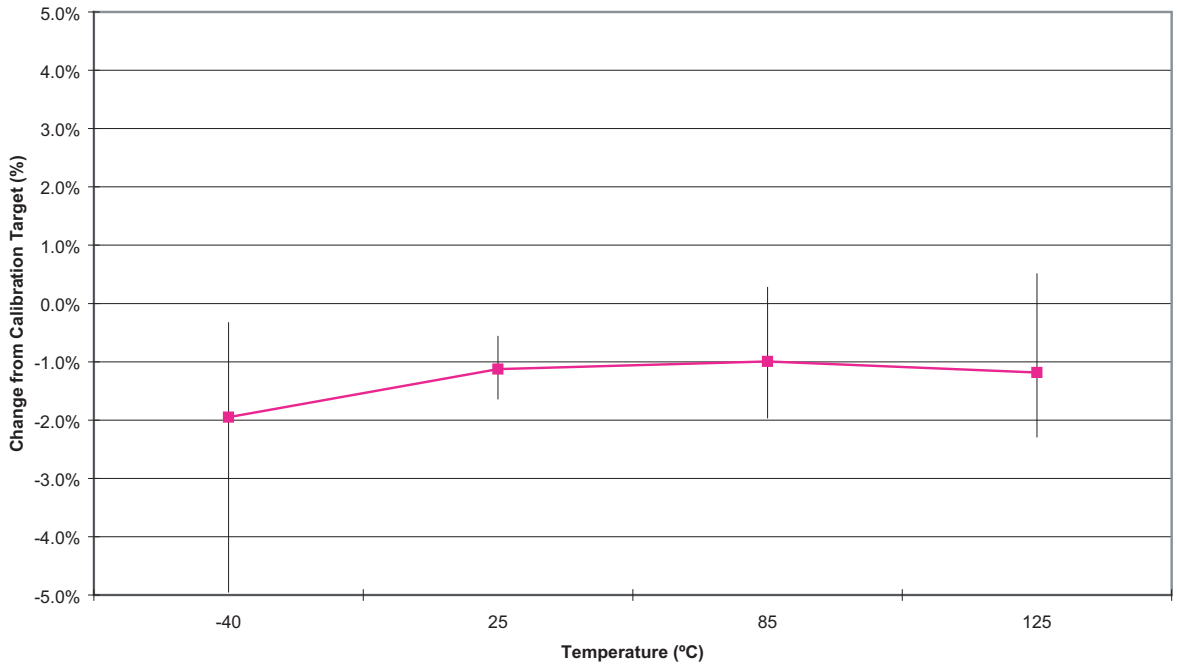

FIGURE 18-10: TYPICAL INTERNAL OSCILLATOR FREQUENCY vs. TEMPERATURE VDD = 3 VOLTS

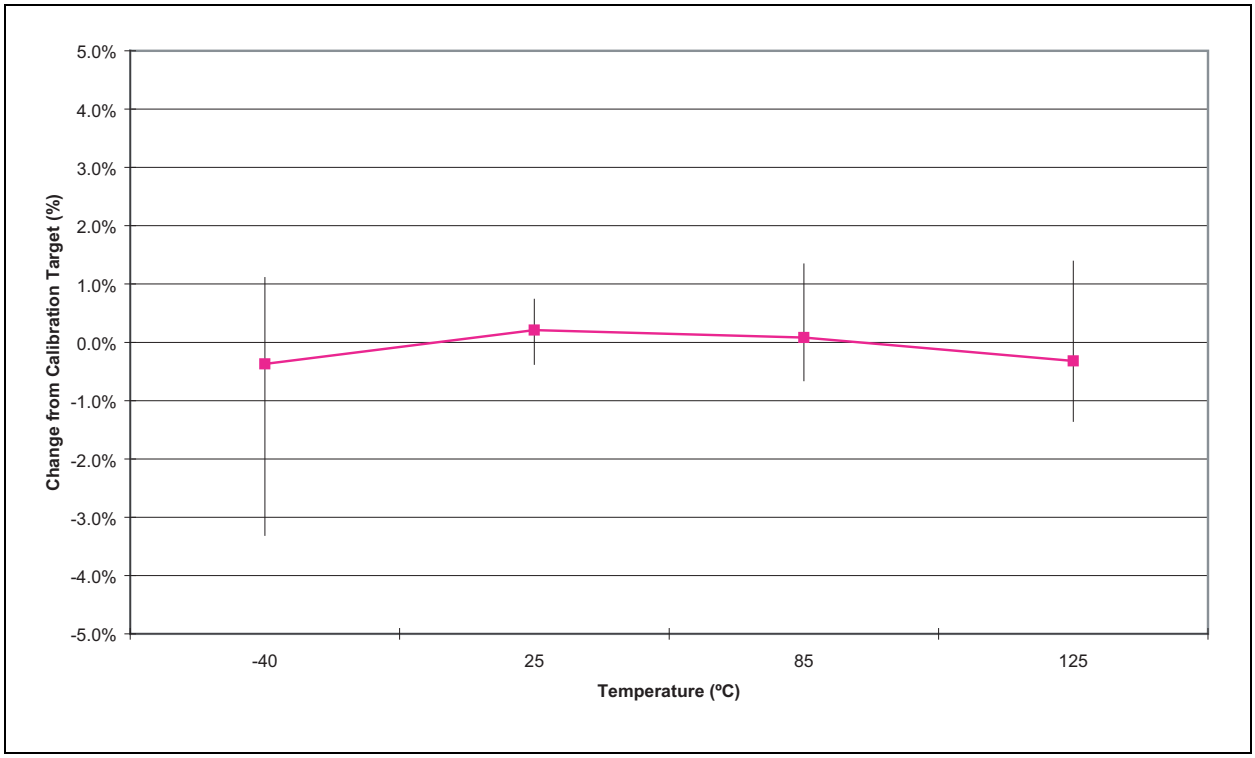

FIGURE 18-11: TYPICAL INTERNAL OSCILLATOR FREQUENCY vs. TEMPERATURE VDD = 2 VOLTS

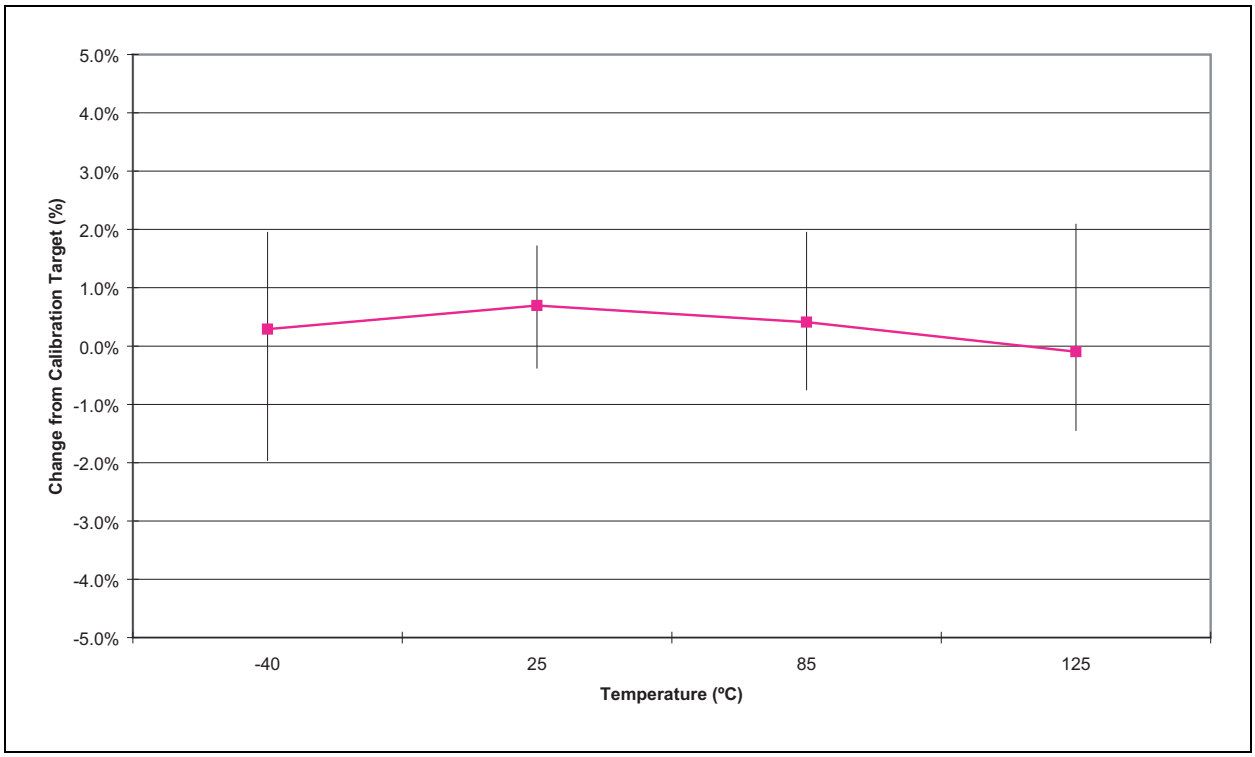

© 2009 Microchip Technology Inc.

FIGURE 18-12: TYPICAL INTERNAL OSCILLATOR DEVIATION vs. VDD AT 25°C – 4 MHz MODE

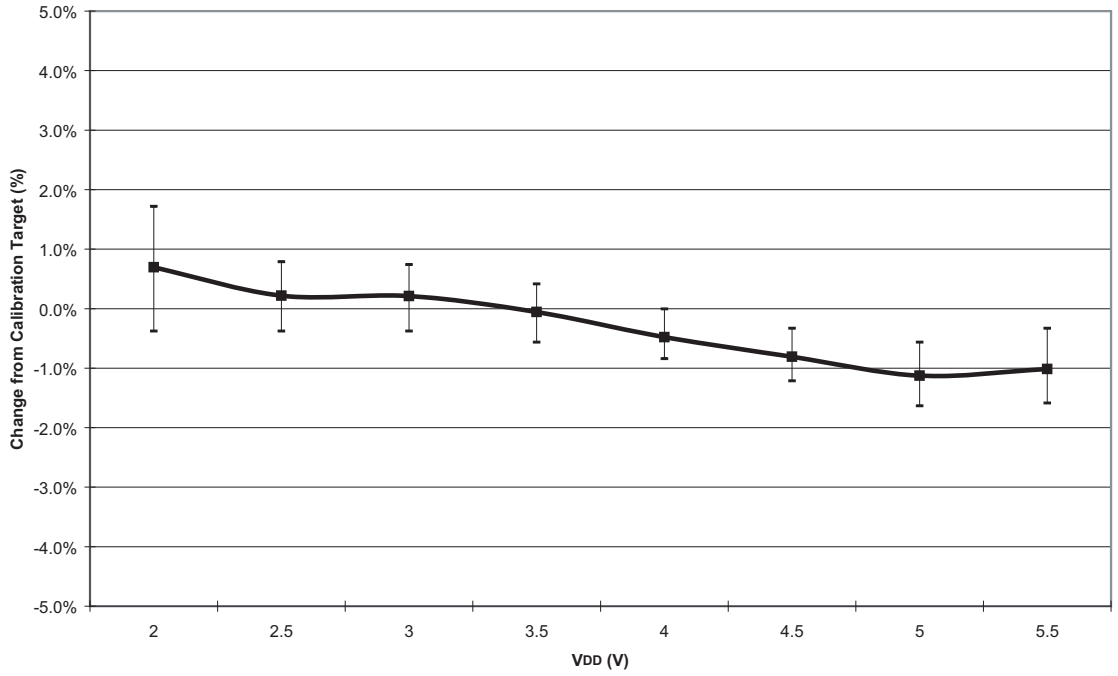

FIGURE 18-13: TYPICAL INTERNAL OSCILLATOR FREQUENCY vs. VDD TEMPERATURE = -40°C TO 85°C

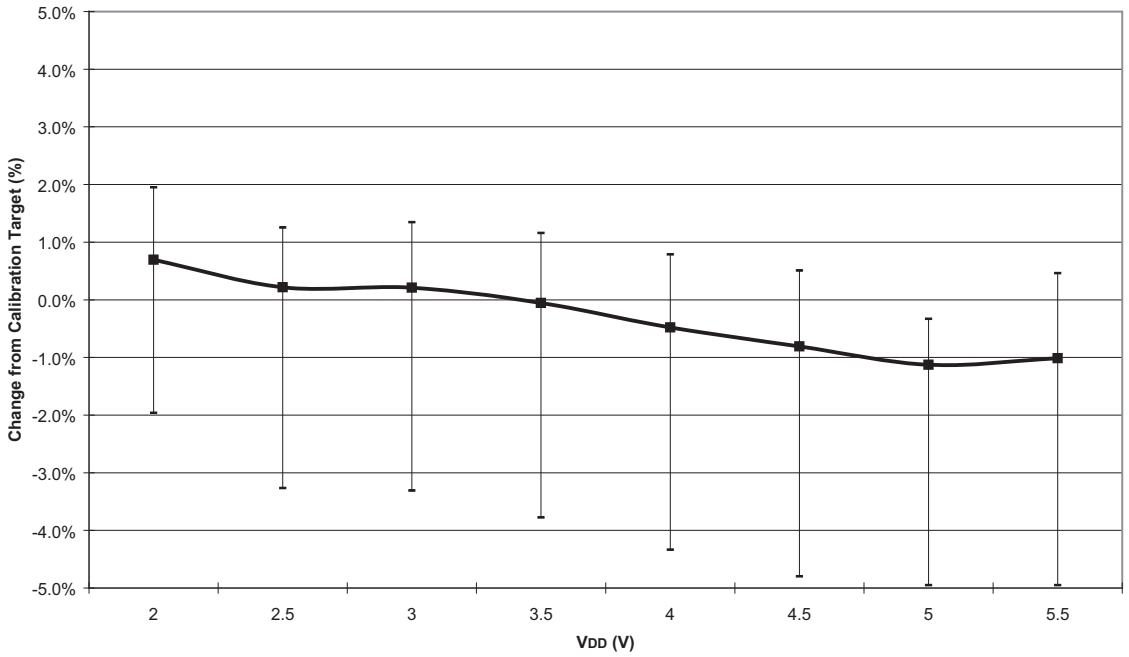

FIGURE 18-14: INTERNAL OSCILLATOR IDD vs. VDD – 4 MHz MODE

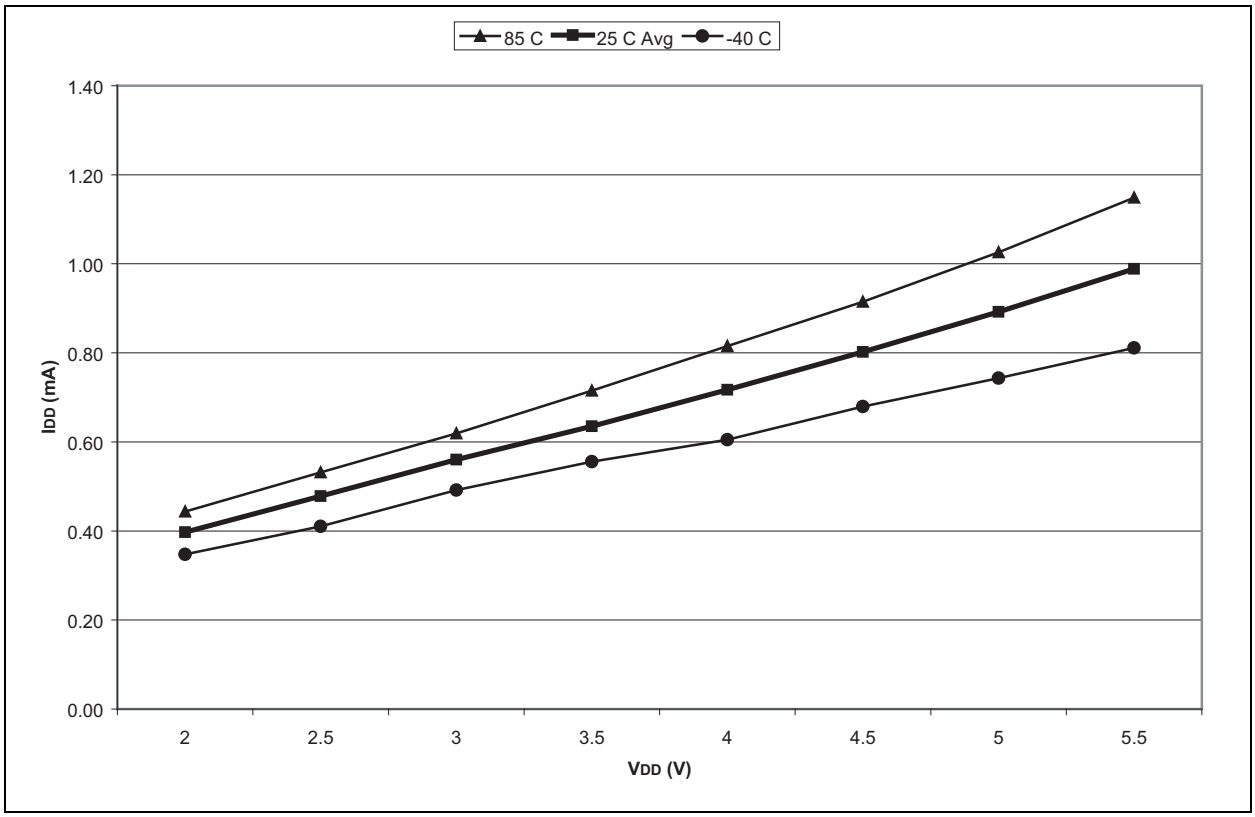

FIGURE 18-15: TYPICAL INTERNAL OSCILLATOR FREQUENCY vs. VDD AT 25°C – SLOW MODE

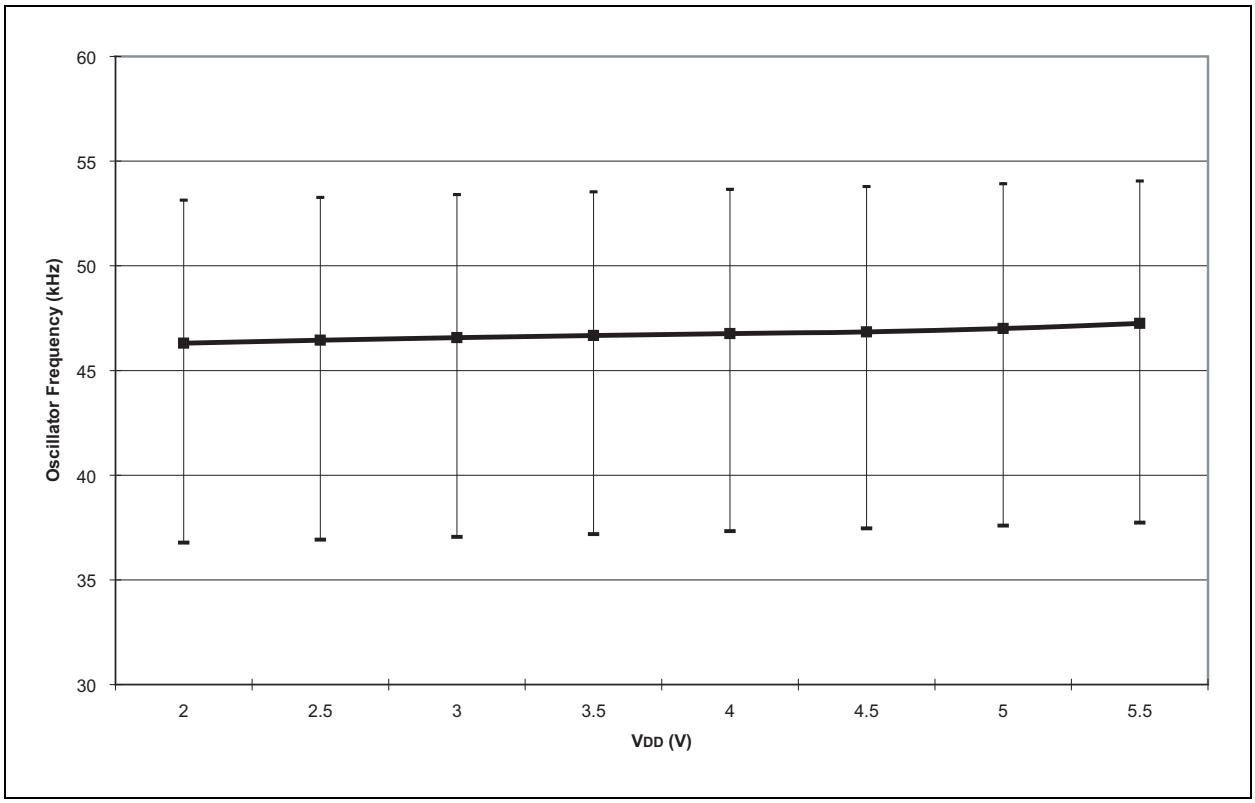

© 2009 Microchip Technology Inc.

FIGURE 18-16: INTERNAL OSCILLATOR IDD vs. VDD – SLOW MODE

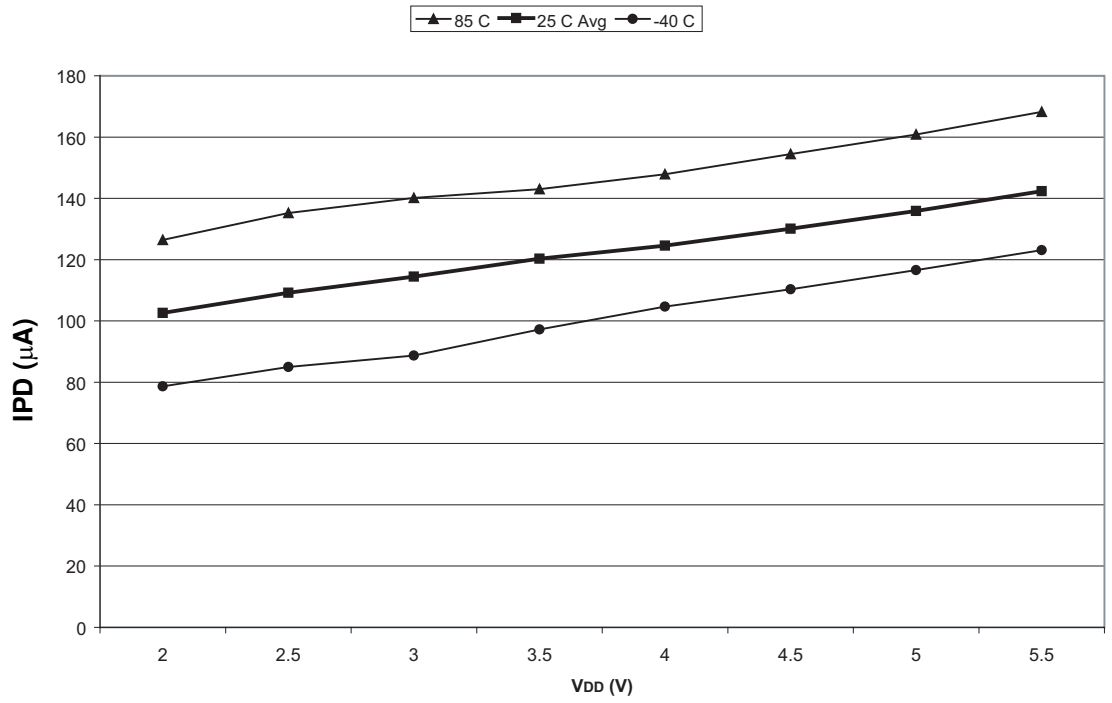

FIGURE 18-17: SUPPLY CURRENT (IDD vs. VDD, FOSC = 1 MHz (XT OSCILLATOR MODE)

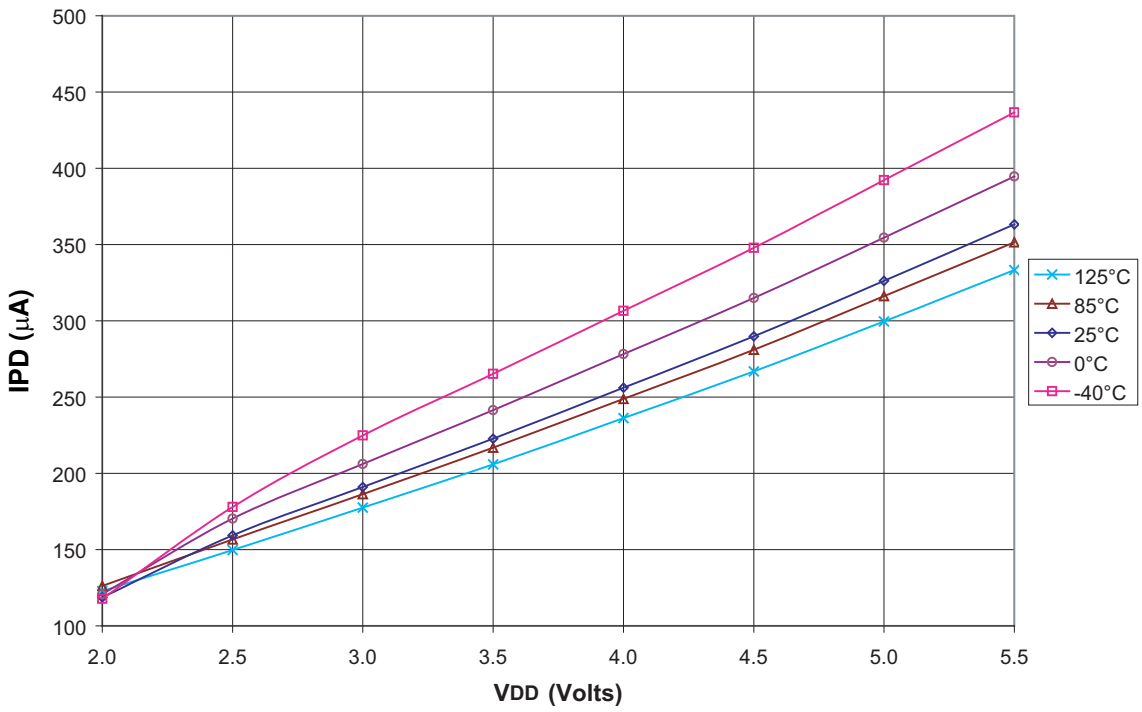

FIGURE 18-18: SUPPLY CURRENT (IDD vs. VDD, FOSC = 4 MHz (XT OSCILLATOR MODE)

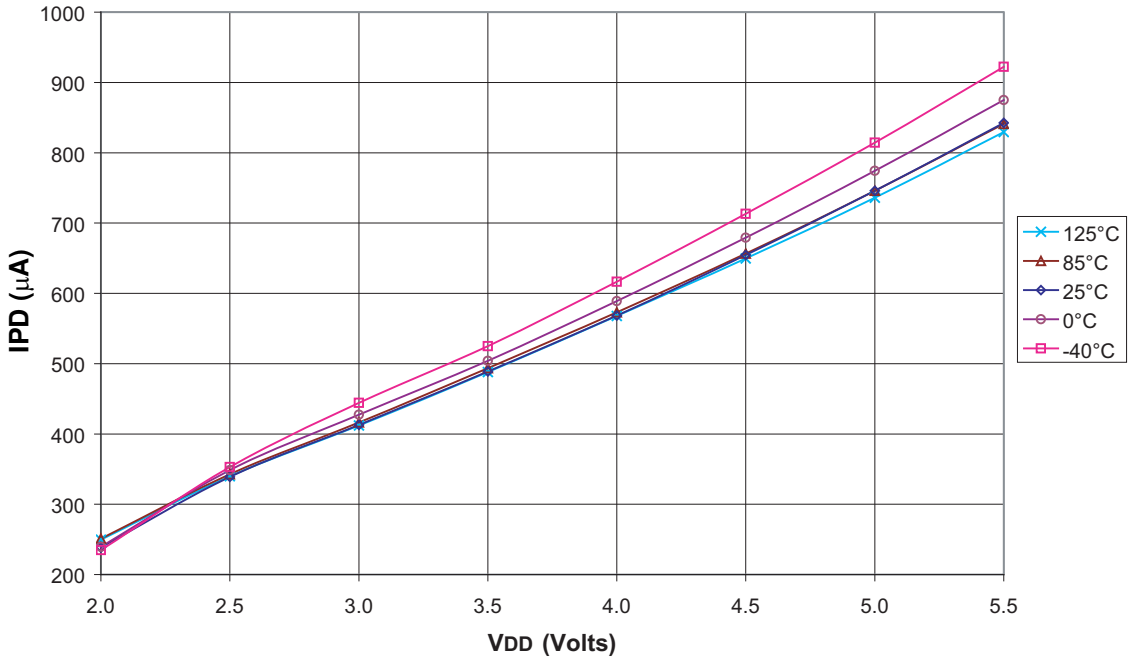

FIGURE 18-19: SUPPLY CURRENT (IDD) vs. VDD, FOSC = 20 MHz (HS OSCILLATOR MODE)

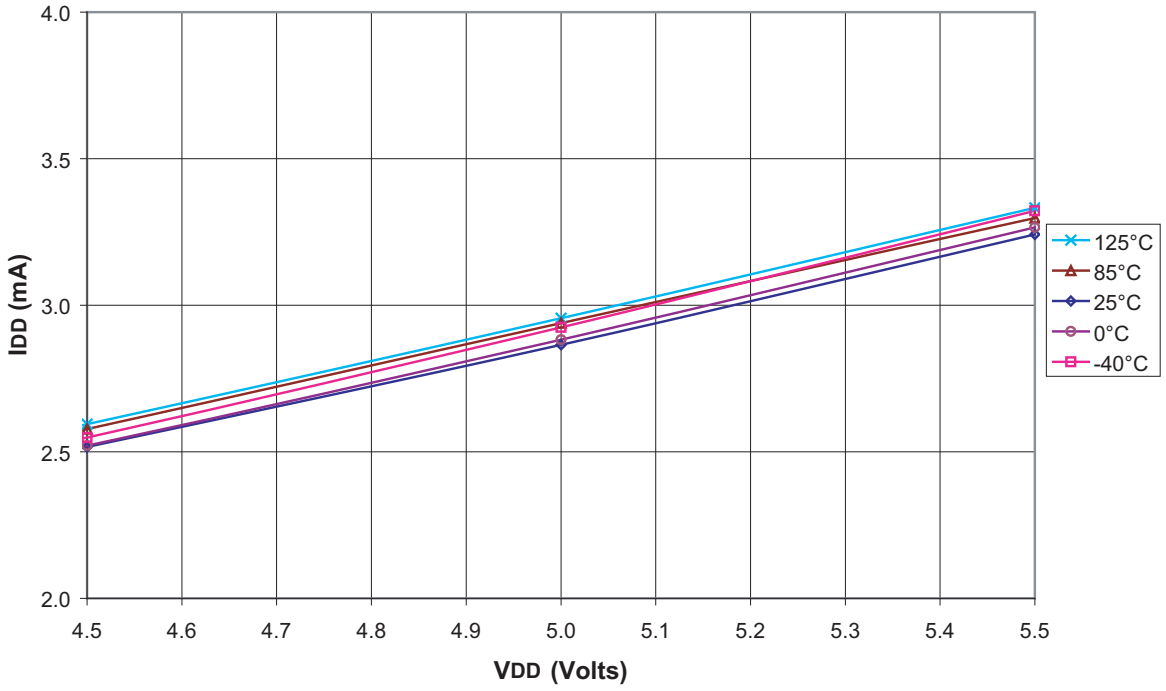

© 2009 Microchip Technology Inc.

FIGURE 18-20: TYPICAL WDT PERIOD vs. V_{DD} (-40°C TO +125°C)

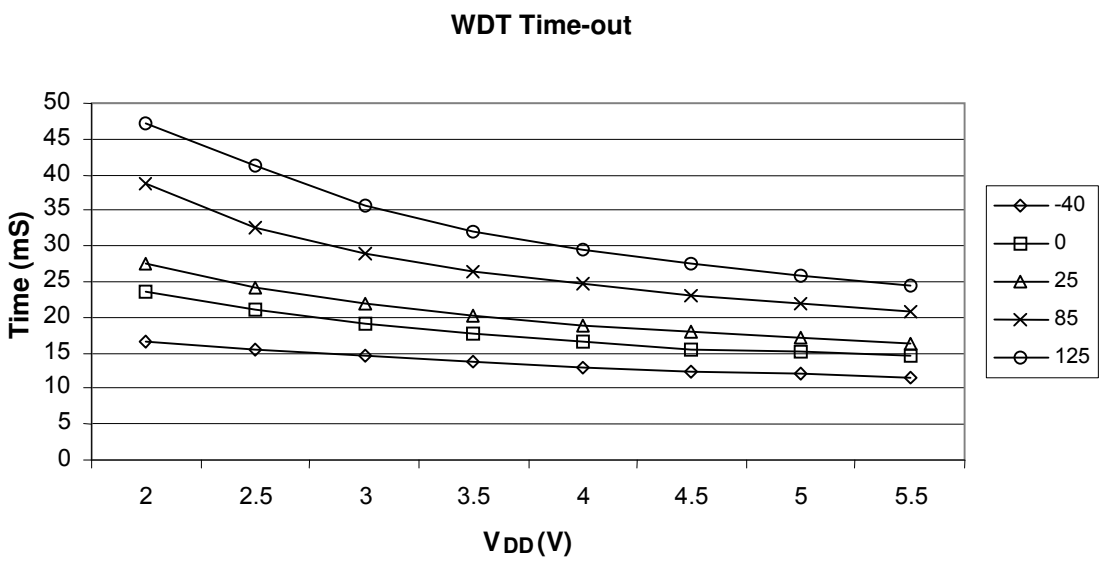

NOTES:

© 2009 Microchip Technology Inc.

19.0 PACKAGING INFORMATION

19.1 Package Marking Information

18-Lead PDIP

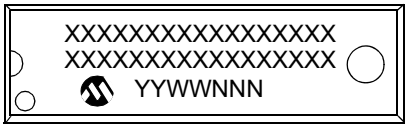

Example

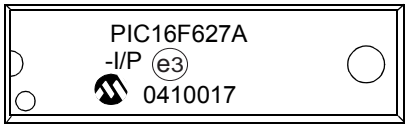

18-Lead SOIC (.300”)

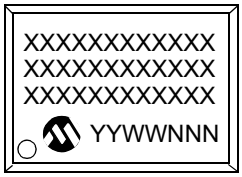

Example

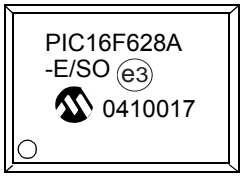

20-Lead SSOP

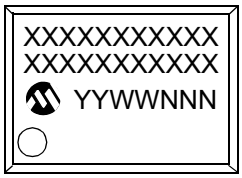

Example

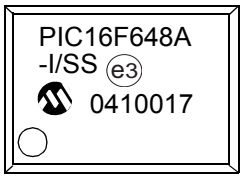

28-Lead QFN

Example

Legend:	XX...X	Customer-specific information
	Y	Year code (last digit of calendar year)
	YY	Year code (last 2 digits of calendar year)
	WW	Week code (week of January 1 is week ‘01’)
	NNN	Alphanumeric traceability code
	e3	Pb-free JEDEC designator for Matte Tin (Sn)
	*	This package is Pb-free. The Pb-free JEDEC designator (e3) can be found on the outer packaging for this package.

Note: In the event the full Microchip part number cannot be marked on one line, it will be carried over to the next line, thus limiting the number of available characters for customer-specific information.

18-Lead Plastic Dual In-Line (P) – 300 mil Body [PDIP]

Note: For the most current package drawings, please see the Microchip Packaging Specification located at http://www.microchip.com/packaging

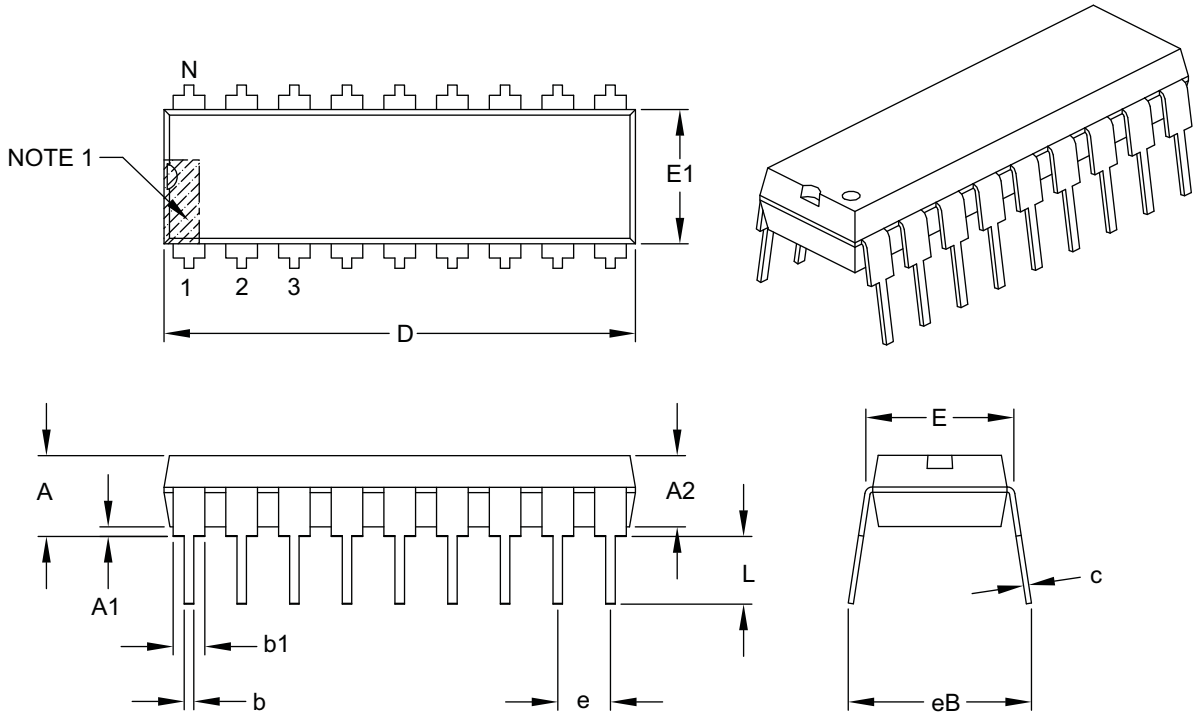

Units		INCHES		
Dimension Limits		MIN	NOM	MAX
Number of Pins	N	18		
Pitch	e	.100 BSC		
Top to Seating Plane	A	–	–	.210
Molded Package Thickness	A2	.115	.130	.195
Base to Seating Plane	A1	.015	–	–
Shoulder to Shoulder Width	E	.300	.310	.325
Molded Package Width	E1	.240	.250	.280
Overall Length	D	.880	.900	.920
Tip to Seating Plane	L	.115	.130	.150
Lead Thickness	c	.008	.010	.014
Upper Lead Width	b1	.045	.060	.070
Lower Lead Width	b	.014	.018	.022
Overall Row Spacing §	eB	–	–	.430

Notes:

1. Pin 1 visual index feature may vary, but must be located within the hatched area.
2. § Significant Characteristic.
3. Dimensions D and E1 do not include mold flash or protrusions. Mold flash or protrusions shall not exceed .010" per side.
4. Dimensioning and tolerancing per ASME Y14.5M.

   BSC: Basic Dimension. Theoretically exact value shown without tolerances.

Microchip Technology Drawing C04-007B

© 2009 Microchip Technology Inc.

18-Lead Plastic Small Outline (SO) – Wide, 7.50 mm Body [SOIC]

Note: For the most current package drawings, please see the Microchip Packaging Specification located at http://www.microchip.com/packaging

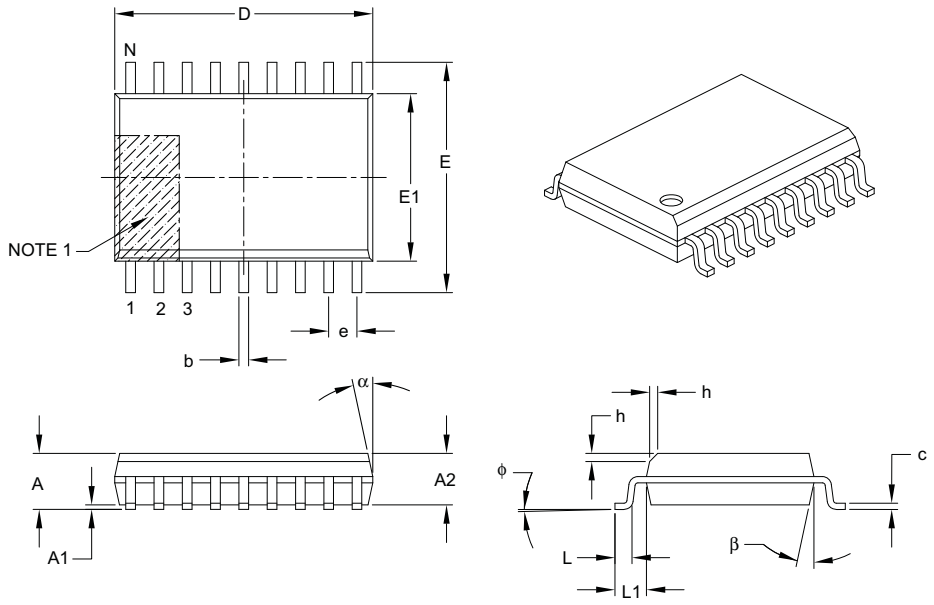

Units		MILLIMETERS		
Dimension Limits		MIN	NOM	MAX
Number of Pins	N	18		
Pitch	e	1.27 BSC		
Overall Height	A	–	–	2.65
Molded Package Thickness	A2	2.05	–	–
Standoff §	A1	0.10	–	0.30
Overall Width	E	10.30 BSC		
Molded Package Width	E1	7.50 BSC		
Overall Length	D	11.55 BSC		
Chamfer (optional)	h	0.25	–	0.75
Foot Length	L	0.40	–	1.27
Footprint	L1	1.40 REF		
Foot Angle	ϕ	0°	–	8°
Lead Thickness	c	0.20	–	0.33
Lead Width	b	0.31	–	0.51
Mold Draft Angle Top	α	5°	–	15°
Mold Draft Angle Bottom	β	5°	–	15°

Notes:

1. Pin 1 visual index feature may vary, but must be located within the hatched area.
2. § Significant Characteristic.
3. Dimensions D and E1 do not include mold flash or protrusions. Mold flash or protrusions shall not exceed 0.15 mm per side.
4. Dimensioning and tolerancing per ASME Y14.5M.

   BSC: Basic Dimension. Theoretically exact value shown without tolerances.
   REF: Reference Dimension, usually without tolerance, for information purposes only.

Microchip Technology Drawing C04-051B

18-Lead Plastic Small Outline (SO) - Wide, 7.50 mm Body [SOIC]

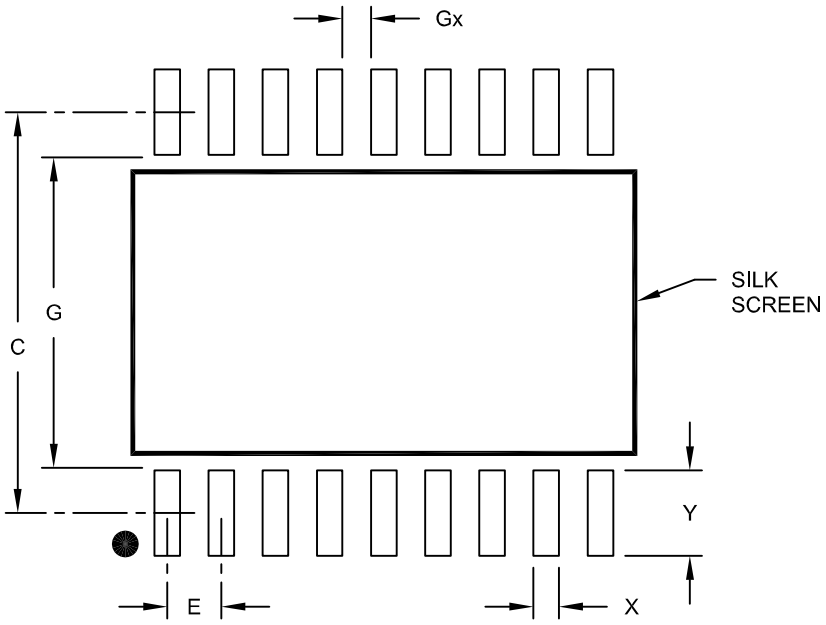

RECOMMENDED LAND PATTERN

Units		MILLIMETERS		
Dimension Limits		MIN	NOM	MAX
Contact Pitch	E		1.27 BSC	
Contact Pad Spacing	C		9.40	
Contact Pad Width	X			0.60
Contact Pad Length	Y			2.00
Distance Between Pads	Gx	0.67		
Distance Between Pads	G	7.40		

Notes:

1. Dimensioning and tolerancing per ASME Y14.5M

BSC: Basic Dimension. Theoretically exact value shown without tolerances.

Microchip Technology Drawing No. C04-2051A

© 2009 Microchip Technology Inc.

20-Lead Plastic Shrink Small Outline (SS) – 5.30 mm Body [SSOP]

Note: For the most current package drawings, please see the Microchip Packaging Specification located at http://www.microchip.com/packaging

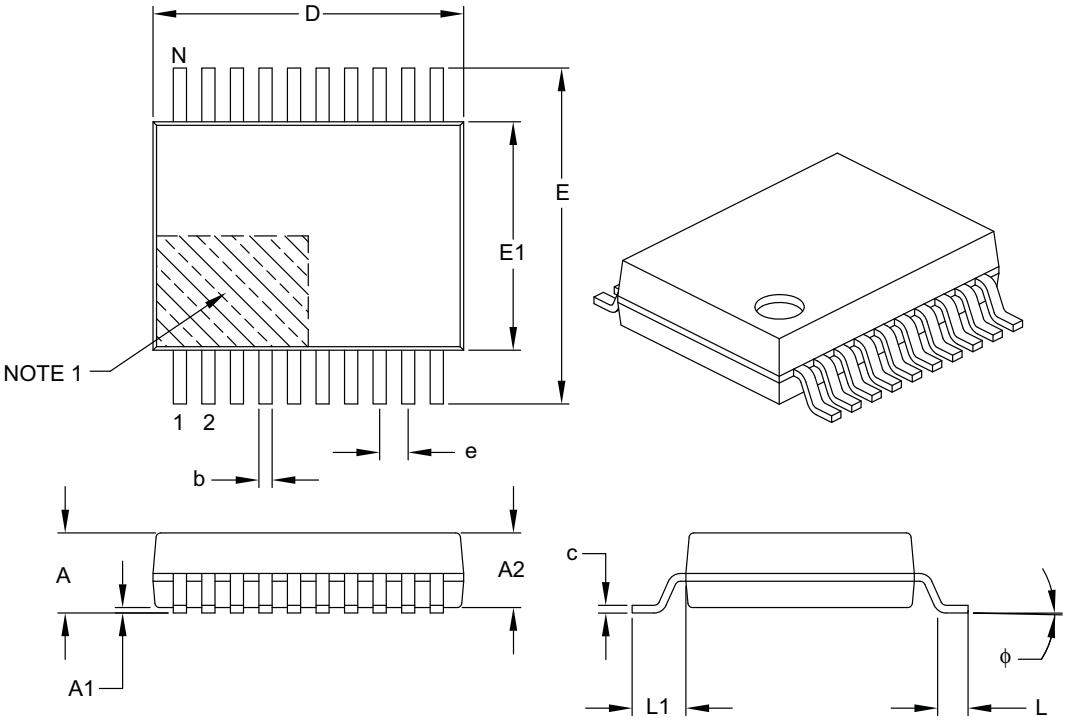

Units		MILLIMETERS		
Dimension Limits		MIN	NOM	MAX
Number of Pins	N	20		
Pitch	e	0.65 BSC		
Overall Height	A	–	–	2.00
Molded Package Thickness	A2	1.65	1.75	1.85
Standoff	A1	0.05	–	–
Overall Width	E	7.40	7.80	8.20
Molded Package Width	E1	5.00	5.30	5.60
Overall Length	D	6.90	7.20	7.50
Foot Length	L	0.55	0.75	0.95
Footprint	L1	1.25 REF		
Lead Thickness	c	0.09	–	0.25
Foot Angle	ϕ	0°	4°	8°
Lead Width	b	0.22	–	0.38

Notes:

1. Pin 1 visual index feature may vary, but must be located within the hatched area.
2. Dimensions D and E1 do not include mold flash or protrusions. Mold flash or protrusions shall not exceed 0.20 mm per side.
3. Dimensioning and tolerancing per ASME Y14.5M.

   BSC: Basic Dimension. Theoretically exact value shown without tolerances.
   REF: Reference Dimension, usually without tolerance, for information purposes only.

Microchip Technology Drawing C04-072B

28-Lead Plastic Quad Flat, No Lead Package (ML) – 6x6 mm Body [QFN] with 0.55 mm Contact Length

Note: For the most current package drawings, please see the Microchip Packaging Specification located at http://www.microchip.com/packaging

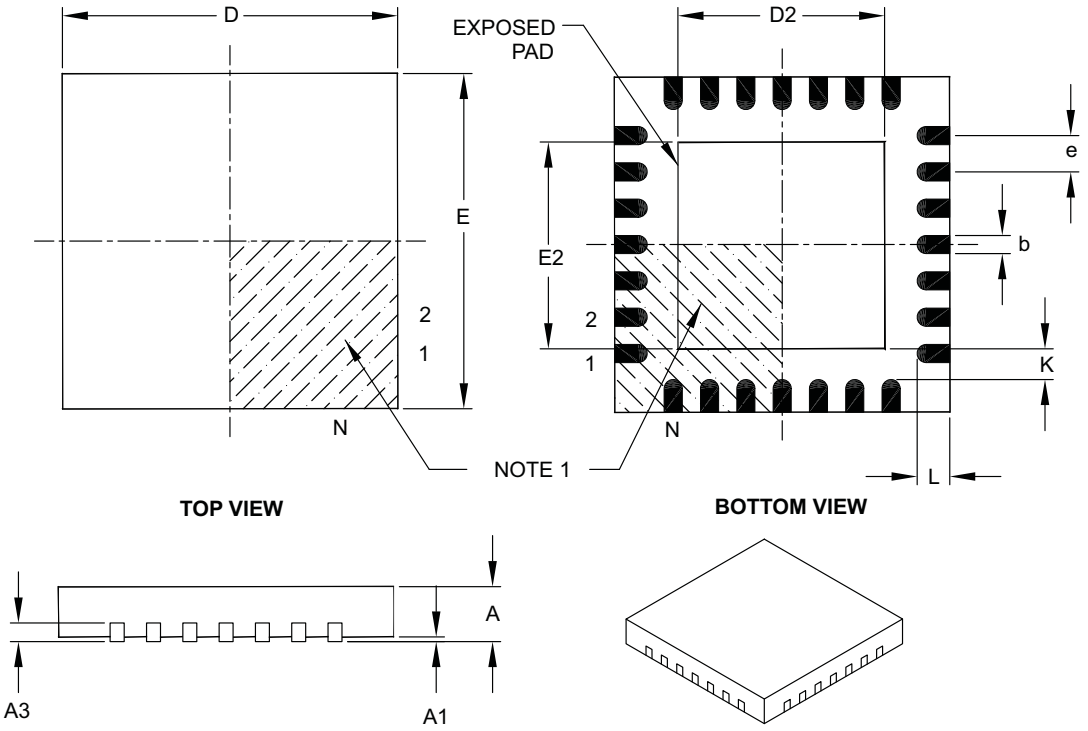

Units		MILLIMETERS		
Dimension Limits		MIN	NOM	MAX
Number of Pins	N	28		
Pitch	e	0.65 BSC		
Overall Height	A	0.80	0.90	1.00
Standoff	A1	0.00	0.02	0.05
Contact Thickness	A3	0.20 REF		
Overall Width	E	6.00 BSC		
Exposed Pad Width	E2	3.65	3.70	4.20
Overall Length	D	6.00 BSC		
Exposed Pad Length	D2	3.65	3.70	4.20
Contact Width	b	0.23	0.30	0.35
Contact Length	L	0.50	0.55	0.70
Contact-to-Exposed Pad	K	0.20	–	–

Notes:

1. Pin 1 visual index feature may vary, but must be located within the hatched area.
2. Package is saw singulated.
3. Dimensioning and tolerancing per ASME Y14.5M.
   BSC: Basic Dimension. Theoretically exact value shown without tolerances.
   REF: Reference Dimension, usually without tolerance, for information purposes only.

Microchip Technology Drawing C04-105B

© 2009 Microchip Technology Inc.

28-Lead Plastic Quad Flat, No Lead Package (ML) – 6x6 mm Body [QFN] with 0.55 mm Contact Length

Note: For the most current package drawings, please see the Microchip Packaging Specification located at http://www.microchip.com/packaging

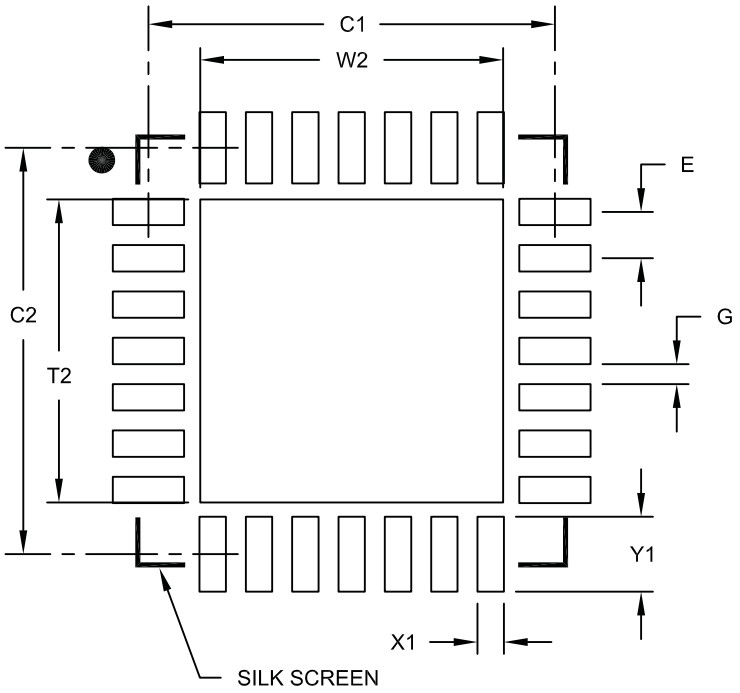

RECOMMENDED LAND PATTERN

Units		MILLIMETERS		
Dimension Limits		MIN	NOM	MAX
Contact Pitch	E		0.65 BSC	
Optional Center Pad Width	W2			4.25
Optional Center Pad Length	T2			4.25
Contact Pad Spacing	C1		5.70	
Contact Pad Spacing	C2		5.70	
Contact Pad Width (X28)	X1			0.37
Contact Pad Length (X28)	Y1			1.00
Distance Between Pads	G	0.20		

Notes:

1. Dimensioning and tolerancing per ASME Y14.5M
   BSC: Basic Dimension. Theoretically exact value shown without tolerances.

Microchip Technology Drawing No. C04-2105A

NOTES:

© 2009 Microchip Technology Inc.

APPENDIX A: DATA SHEET REVISION HISTORY

Revision A

This is a new data sheet.

Revision B

Revised 28-Pin QFN Pin Diagram
Revised Figure 5-4 Block Diagram
Revised Register 7-1 TMR1ON
Revised Example 13-4 Data EEPROM Refresh Routine
Revised Instruction Set SUBWF, Example 1
Revised DC Characteristics 17-2 and 17-3
Revised Tables 17-4 and 17-6
Corrected Table and Figure numbering in Section 17.0

Revision C

General revisions throughout. Revisions to Section 14.0 – Special Features of the CPU. Section 18, modified graphs.

Revision D

Revise Example 13-2, Data EEPROM Write
Revise Sections 17.2, Param No. D020 and 17.3, Param No. D020E
Revise Section 18.0 graphs

Revision E

Section 19.0 Packaging Information: Replaced package drawings and added note.

Revision F (03/2007)

Replaced Package Drawings (Rev. AM); Replaced Development Support Section; Revised Product ID System.

Revision G (10/2009)

Corrected 28-lead QFN Package in Section 19.1.

APPENDIX B: DEVICE DIFFERENCES

The differences between the PIC16F627A/628A/648A devices listed in this data sheet are shown in Table B-1.

TABLE B-1: DEVICE DIFFERENCES

Device	Memory		
	Flash Program	RAM Data	EEPROM Data
PIC16F627A	1024 x 14	224 x 8	128 x 8
PIC16F628A	2048 x 14	224 x 8	128 x 8
PIC16F648A	4096 x 14	256 x 8	256 x 8

APPENDIX C: DEVICE MIGRATIONS

This section describes the functional and electrical specification differences when migrating between functionally similar devices. (such as from a PIC16F627 to a PIC16F627A).

C.1 PIC16F627/628 to a PIC16F627A/628A

1. ER mode is now RC mode.
2. Code protection for the program memory has changed from code-protect sections of memory to code-protect of the whole memory. The configuration bits CP0 and CP1 in the PIC16F627/628 do not exist in the PIC16F627A/628A. They have been replaced with one configuration bit<13> $\overline{CP}$.
3. “Brown-out Detect (BOD)” terminology has changed to “Brown-out Reset (BOR)” to better represent the function of the Brown-out circuitry.
4. Enabling Brown-out Reset (BOR) does not automatically enable the Power-up Timer (PWRT) the way it did in the PIC16F627/628.
5. INTRC is now called INTOSC.
6. Timer1 Oscillator is now designed for 32.768 kHz operation. In the PIC16F627/628, the Timer1 oscillator was designed to run up to 200 kHz.
7. The Dual-Speed Oscillator mode only works in the INTOSC oscillator mode. In the PIC16F627/628, the Dual-Speed Oscillator mode worked in both the INTRC and ER oscillator modes.

APPENDIX D: MIGRATING FROM OTHER PIC® DEVICES

This discusses some of the issues in migrating from other PIC MCU devices to the PIC16F627A/628A/648A family of devices.

D.1 PIC16C62X/CE62X to PIC16F627A/628A/648A Migration

See Microchip web site for availability (www.microchip.com).

D.2 PIC16C622A to PIC16F627A/628A/648A Migration

See Microchip web site for availability (www.microchip.com).

Note:	This device has been designed to perform to the parameters of its data sheet. It has been tested to an electrical specification designed to determine its conformance with these parameters. Due to process differences in the manufacture of this device, this device may have different performance characteristics than its earlier version. These differences may cause this device to perform differently in your application than the earlier version of this device.

© 2009 Microchip Technology Inc.

THE MICROCHIP WEB SITE

Microchip provides online support via our WWW site at www.microchip.com. This web site is used as a means to make files and information easily available to customers. Accessible by using your favorite Internet browser, the web site contains the following information:

- **Product Support** – Data sheets and errata, application notes and sample programs, design resources, user's guides and hardware support documents, latest software releases and archived software
- **General Technical Support** – Frequently Asked Questions (FAQ), technical support requests, online discussion groups, Microchip consultant program member listing
- **Business of Microchip** – Product selector and ordering guides, latest Microchip press releases, listing of seminars and events, listings of Microchip sales offices, distributors and factory representatives

CUSTOMER CHANGE NOTIFICATION SERVICE

Microchip's customer notification service helps keep customers current on Microchip products. Subscribers will receive e-mail notification whenever there are changes, updates, revisions or errata related to a specified product family or development tool of interest.

To register, access the Microchip web site at www.microchip.com, click on Customer Change Notification and follow the registration instructions.

CUSTOMER SUPPORT

Users of Microchip products can receive assistance through several channels:

- Distributor or Representative
- Local Sales Office
- Field Application Engineer (FAE)
- Technical Support
- Development Systems Information Line

Customers should contact their distributor, representative or field application engineer (FAE) for support. Local sales offices are also available to help customers. A listing of sales offices and locations is included in the back of this document.

Technical support is available through the web site at: http://support.microchip.com

READER RESPONSE

It is our intention to provide you with the best documentation possible to ensure successful use of your Microchip product. If you wish to provide your comments on organization, clarity, subject matter, and ways in which our documentation can better serve you, please FAX your comments to the Technical Publications Manager at (480) 792-4150.

Please list the following information, and use this outline to provide us with your comments about this document.

To: Technical Publications Manager Total Pages Sent _____

RE: Reader Response

From: Name _____

Company _____

Address _____

City / State / ZIP / Country _____

Telephone: (_____) _____ - _____ FAX: (_____) _____ - _____

Application (optional):

Would you like a reply?____Y ____N

Device: PIC16F627A/628A/648A Literature Number: DS40044G

Questions:

1. What are the best features of this document?

_____

_____

2. How does this document meet your hardware and software development needs?

_____

_____

3. Do you find the organization of this document easy to follow? If not, why?

_____

_____

4. What additions to the document do you think would enhance the structure and subject?

_____

_____

5. What deletions from the document could be made without affecting the overall usefulness?

_____

_____

6. Is there any incorrect or misleading information (what and where)?

_____

_____

7. How would you improve this document?

_____

_____

© 2009 Microchip Technology Inc.

INDEX

A

A/D
- Special Event Trigger (CCP) ... 59

Absolute Maximum Ratings ... 135
ADDLW Instruction ... 119
ADDWF Instruction ... 119
ANDLW Instruction ... 119
ANDWF Instruction ... 119
Architectural Overview ... 11
Assembler
- MPASM Assembler ... 132

B

Baud Rate Error ... 75
Baud Rate Formula ... 75
BCF Instruction ... 120
Block Diagrams
- Comparator
  - I/O Operating Modes ... 64
  - Modified Comparator Output ... 66
- I/O Ports
  - RB0/INT Pin ... 38
  - RB1/RX/DT Pin ... 39
  - RB2/TX/CK Pin ... 39
  - RB3/CCP1 Pin ... 40
  - RB4/PGM Pin ... 41
  - RB5 Pin ... 42
  - RB6/T1OSO/T1CKI Pin ... 43
  - RB7/T1OSI Pin ... 44
- RC Oscillator Mode ... 101
- USART Receive ... 82
- USART Transmit ... 80

BRGH bit ... 75
Brown-Out Reset (BOR) ... 103
BSF Instruction ... 120
BTFSC Instruction ... 120
BTFSS Instruction ... 121

C

C Compilers
- MPLAB C18 ... 132

CALL Instruction ... 121
Capture (CCP Module) ... 58
- Block Diagram ... 58
- CCP Pin Configuration ... 58
- CCPR1H:CCPR1L Registers ... 58
- Changing Between Capture Prescalers ... 58
- Prescaler ... 58
- Software Interrupt ... 58
- Timer1 Mode Selection ... 58

Capture/Compare/PWM (CCP) ... 57
- Capture Mode. *See* Capture
- CCP1 ... 57
  - CCPR1H Register ... 57
  - CCPR1L Register ... 57
- CCP2 ... 57
- Compare Mode. *See* Compare
- PWM Mode. *See* PWM
- Timer Resources ... 57

CCP1CON Register ... 57
- CCP1M Bits ... 57
- CCP1X:CCP1Y Bits ... 57

CCP2CON Register
- CCP2M<3:2> Bits ... 57
- CCP2X:CCP2Y Bits ... 57

Clocking Scheme/Instruction Cycle ... 15
CLRF Instruction ... 121
CLRW Instruction ... 122
CLRWDT Instruction ... 122
CMCON Register ... 63
Code Examples
- Data EEPROM Refresh Routine ... 94

Code Protection ... 113
COMF Instruction ... 122
Comparator
- Block Diagrams
  - I/O Operating Modes ... 64
  - Modified Comparator Output ... 66
- Comparator Module ... 63
- Configuration ... 64
- Interrupts ... 67
- Operation ... 65
- Reference ... 65

Compare (CCP Module) ... 58
- Block Diagram ... 58
- CCP Pin Configuration ... 59
- CCPR1H:CCPR1L Registers ... 58
- Software Interrupt ... 59
- Special Event Trigger ... 59
- Timer1 Mode Selection ... 59

CONFIG Register ... 98
Configuration Bits ... 97
Crystal Operation ... 99
Customer Change Notification Service ... 173
Customer Notification Service ... 173
Customer Support ... 173

D

Data EEPROM Memory ... 91
- EECON1 Register ... 91
- EECON2 Register ... 91
- Operation During Code Protection ... 95
- Reading ... 93
- Spurious Write Protection ... 93
- Using ... 94
- Write Verify ... 93
- Writing to ... 93

Data Memory Organization ... 17
DECF Instruction ... 122
DECFSZ Instruction ... 123
Development Support ... 131
Device Differences ... 171
Device Migrations ... 172
Dual-speed Oscillator Modes ... 101

E

EECON1 Register ... 92
EECON1 register ... 92
EECON2 register ... 92
Errata ... 5
External Crystal Oscillator Circuit ... 100

F

Fuses. *See* Configuration Bits

G

General-Purpose Register File ... 17
GOTO Instruction ... 123

I

I/O Ports 33
Bidirectional 46
Block Diagrams
RB0/INT Pin 38
RB1/RX/DT Pin 39
RB2/TX/CK Pin 39
RB3/CCP1 Pin 40
RB4/PGM Pin 41
RB5 Pin 42
RB6/T1OSO/T1CKI Pin 43
RB7/T1OSI Pin 44
PORTA 33
PORTB 38
Programming Considerations 46
Successive Operations 46
TRISA 33
TRISB 38
ID Locations 113
INCF Instruction 124
INCFSZ Instruction 124
In-Circuit Serial Programming™ 114
Indirect Addressing, INDF and FSR Registers 30
Instruction Flow/Pipelining 15
Instruction Set
ADDLW 119
ADDWF 119
ANDLW 119
ANDWF 119
BCF 120
BSF 120
BTFSC 120
BTFSS 121
CALL 121
CLRF 121
CLRW 122
CLRWDT 122
COMF 122
DECF 122
DECFSZ 123
GOTO 123
INCF 124
INCFSZ 124
IORLW 125
IORWF 125
MOVF 125
MOVLW 125
MOVWF 126
NOP 126
OPTION 126
RETFIE 126
RETLW 127
RETURN 127
RLF 127
RRF 128
SLEEP 128
SUBLW 128
SUBWF 129
SWAPF 129
TRIS 129
XORLW 130
XORWF 130
Instruction Set Summary 117
INT Interrupt 110
INTCON Register 26
Internet Address 173
Interrupt Sources
Capture Complete (CCP) 58
Compare Complete (CCP) 59
TMR2 to PR2 Match (PWM) 60
Interrupts 109
Interrupts, Enable Bits
CCP1 Enable (CCP1IE Bit) 58
Interrupts, Flag Bits
CCP1 Flag (CCP1IF Bit) 58
IORLW Instruction 125
IORWF Instruction 125

M

Memory Organization
Data EEPROM Memory 91, 93, 95
Microchip Internet Web Site 173
Migrating from other PICmicro Devices 172
MOVF Instruction 125
MOVLW Instruction 125
MOVWF Instruction 126
MPLAB ASM30 Assembler, Linker, Librarian 132
MPLAB Integrated Development Environment Software 131
MPLAB PM3 Device Programmer 134
MPLAB REAL ICE In-Circuit Emulator System 133
MPLINK Object Linker/MPLIB Object Librarian 132

N

NOP Instruction 126

O

OPTION Instruction 126
OPTION Register 25
OPTION_REG Register 25
Oscillator Configurations 99
Oscillator Start-up Timer (OST) 103

P

Package Marking Information 163
Packaging Information 163
PCL and PCLATH 30
Stack 30
PCON Register 29
PIE1 Register 27
Pin Functions
RC6/TX/CK 73–89
RC7/RX/DT 73–89
PIR1 Register 28
PORTA 33
PORTB 38
PORTB Interrupt 110
Power Control/Status Register (PCON) 104
Power-Down Mode (Sleep) 112
Power-On Reset (POR) 103
Power-up Timer (PWRT) 103
PR2 Register 54, 60
Program Memory Organization 17
PWM (CCP Module) 60
Block Diagram 60
Simplified PWM 60
CCPR1H:CCPR1L Registers 60
Duty Cycle 61
Example Frequencies/Resolutions 61
Period 60
Set-Up for PWM Operation 61
TMR2 to PR2 Match 60

© 2009 Microchip Technology Inc.

Q

Q-Clock 61
Quick-Turnaround-Production (QTP) Devices 9

R

RC Oscillator 101
RC Oscillator Mode
  Block Diagram 101
Reader Response 174
Registers
  CCP1CON (CCP Operation) 57
  CMCON (Comparator Configuration) 63
  CONFIG (Configuration Word) 98
  EECON1 (EEPROM Control Register 1) 92
  INTCON (Interrupt Control) 26
  Maps
    PIC16F627A 18, 19
    PIC16F628A 18, 19
  OPTION_REG (Option) 25
  PCON (Power Control) 29
  PIE1 (Peripheral Interrupt Enable 1) 27
  PIR1 (Peripheral Interrupt Register 1) 28
  Status 24
  T1CON Timer1 Control) 50
  T2CON Timer2 Control) 55
Reset 101
RETFIE Instruction 126
RETLW Instruction 127
RETURN Instruction 127
Revision History 171
RLF Instruction 127
RRF Instruction 128

S

Serial Communication Interface (SCI) Module, See USART
Serialized Quick-Turnaround-Production (SQTP) Devices ... 9
SLEEP Instruction 128
Software Simulator (MPLAB SIM) 133
Special Event Trigger. *See* Compare
Special Features of the CPU 97
Special Function Registers 20
Status Register 24
SUBLW Instruction 128
SUBWF Instruction 129
SWAPF Instruction 129

T

T1CKPS0 bit 50
T1CKPS1 bit 50
T1CON Register 50
T1OSCEN bit 50
T2CKPS0 bit 55
T2CKPS1 bit 55
T2CON Register 55
Timer0
  Block Diagrams
    Timer0/WDT 48
  External Clock Input 47
  Interrupt 47
  Prescaler 48
  Switching Prescaler Assignment 49
  Timer0 Module 47
Timer1
  Asynchronous Counter Mode 52
  Capacitor Selection 53
  External Clock Input 51
  External Clock Input Timing 52
  Oscillator 53
  Prescaler 51, 53
  Resetting Timer1 53
  Resetting Timer1 Registers 53
  Special Event Trigger (CCP) 59
  Synchronized Counter Mode 51
  Timer Mode 51
  TMR1H 52
  TMR1L 52
Timer2
  Block Diagram 54
  Postscaler 54
  PR2 register 54
  Prescaler 54, 61
  Timer2 Module 54
  TMR2 output 54
  TMR2 to PR2 Match Interrupt 60
Timing Diagrams
  Timer0 147
  Timer1 147
  USART
    Asynchronous Receiver 83
  USART Asynchronous Master Transmission 80
  USART Asynchronous Reception 83
  USART Synchronous Reception 89
  USART Synchronous Transmission 87
Timing Diagrams and Specifications 144
TMR0 Interrupt 110
TMR1CS bit 50
TMR1ON bit 50
TMR2ON bit 55
TOUTPS0 bit 55
TOUTPS1 bit 55
TOUTPS2 bit 55
TOUTPS3 bit 55
TRIS Instruction 129
TRISA 33
TRISB 38

U

Universal Synchronous Asynchronous Receiver Transmitter (USART) 73
  Asynchronous Receiver
    Setting Up Reception 85
  Asynchronous Receiver Mode
    Address Detect 85
    Block Diagram 85
USART
  Asynchronous Mode 79
  Asynchronous Receiver 82
  Asynchronous Reception 84
  Asynchronous Transmission 80
  Asynchronous Transmitter 79
  Baud Rate Generator (BRG) 75
  Block Diagrams
    Transmit 80
    USART Receive 82
  BRGH bit 75
  Sampling 76, 77, 78
  Synchronous Master Mode 86
  Synchronous Master Reception 88
  Synchronous Master Transmission 86
  Synchronous Slave Mode 89
  Synchronous Slave Reception 90

Synchronous Slave Transmit 89

V

Voltage Reference
Configuration..... 69
Voltage Reference Module 69

W

Watchdog Timer (WDT) 111
WWW Address..... 173
WWW, On-Line Support..... 5

X

XORLW Instruction 130
XORWF Instruction 130

© 2009 Microchip Technology Inc.

PRODUCT IDENTIFICATION SYSTEM

To order or obtain information, e.g., on pricing or delivery, refer to the factory or the listed sales office.

PART NO.	X	/XX	XXX
Device	Temperature Range	Package	Pattern

Device:	PIC16F627A/628A/648A:Standard VDD range 3.0V to 5.5V PIC16F627A/628A/648AT:VDD range 3.0V to 5.5V (Tape and Reel) PIC16LF627A/628A/648A:VDD range 2.0V to 5.5V PIC16LF627A/628A/648AT:VDD range 2.0V to 5.5V (Tape and Reel)
Temperature Range:	I = -40°C to +85°C E = -40°C to+125°C
Package:	P = PDIP SO = SOIC (Gull Wing, 7.50 mm body) SS = SSOP (5.30 mm ML = QFN (28 Lead)

Examples:

a) PIC16F627A - E/P 301 = Extended Temp., PDIP package, 20 MHz, normal VDD limits, QTP pattern #301.

b) PIC16LF627A - I/SO = Industrial Temp., SOIC package, 20 MHz, extended VDD limits.

WORLDWIDE SALES AND SERVICE

AMERICAS

Corporate Office
2355 West Chandler Blvd.
Chandler, AZ 85224-6199
Tel: 480-792-7200
Fax: 480-792-7277
Technical Support:
http://support.microchip.com
Web Address:
www.microchip.com

Atlanta
Duluth, GA
Tel: 678-957-9614
Fax: 678-957-1455

Boston
Westborough, MA
Tel: 774-760-0087
Fax: 774-760-0088

Chicago
Itasca, IL
Tel: 630-285-0071
Fax: 630-285-0075

Cleveland
Independence, OH
Tel: 216-447-0464
Fax: 216-447-0643

Dallas
Addison, TX
Tel: 972-818-7423
Fax: 972-818-2924

Detroit
Farmington Hills, MI
Tel: 248-538-2250
Fax: 248-538-2260

Kokomo
Kokomo, IN
Tel: 765-864-8360
Fax: 765-864-8387

Los Angeles
Mission Viejo, CA
Tel: 949-462-9523
Fax: 949-462-9608

Santa Clara
Santa Clara, CA
Tel: 408-961-6444
Fax: 408-961-6445

Toronto
Mississauga, Ontario,
Canada
Tel: 905-673-0699
Fax: 905-673-6509

ASIA/PACIFIC

Asia Pacific Office
Suites 3707-14, 37th Floor
Tower 6, The Gateway
Harbour City, Kowloon
Hong Kong
Tel: 852-2401-1200
Fax: 852-2401-3431

Australia - Sydney
Tel: 61-2-9868-6733
Fax: 61-2-9868-6755

China - Beijing
Tel: 86-10-8528-2100
Fax: 86-10-8528-2104

China - Chengdu
Tel: 86-28-8665-5511
Fax: 86-28-8665-7889

China - Hong Kong SAR
Tel: 852-2401-1200
Fax: 852-2401-3431

China - Nanjing
Tel: 86-25-8473-2460
Fax: 86-25-8473-2470

China - Qingdao
Tel: 86-532-8502-7355
Fax: 86-532-8502-7205

China - Shanghai
Tel: 86-21-5407-5533
Fax: 86-21-5407-5066

China - Shenyang
Tel: 86-24-2334-2829
Fax: 86-24-2334-2393

China - Shenzhen
Tel: 86-755-8203-2660
Fax: 86-755-8203-1760

China - Wuhan
Tel: 86-27-5980-5300
Fax: 86-27-5980-5118

China - Xiamen
Tel: 86-592-2388138
Fax: 86-592-2388130

China - Xian
Tel: 86-29-8833-7252
Fax: 86-29-8833-7256

China - Zhuhai
Tel: 86-756-3210040
Fax: 86-756-3210049

ASIA/PACIFIC

India - Bangalore
Tel: 91-80-3090-4444
Fax: 91-80-3090-4080

India - New Delhi
Tel: 91-11-4160-8631
Fax: 91-11-4160-8632

India - Pune
Tel: 91-20-2566-1512
Fax: 91-20-2566-1513

Japan - Yokohama
Tel: 81-45-471- 6166
Fax: 81-45-471-6122

Korea - Daegu
Tel: 82-53-744-4301
Fax: 82-53-744-4302

Korea - Seoul
Tel: 82-2-554-7200
Fax: 82-2-558-5932 or
82-2-558-5934

Malaysia - Kuala Lumpur
Tel: 60-3-6201-9857
Fax: 60-3-6201-9859

Malaysia - Penang
Tel: 60-4-227-8870
Fax: 60-4-227-4068

Philippines - Manila
Tel: 63-2-634-9065
Fax: 63-2-634-9069

Singapore
Tel: 65-6334-8870
Fax: 65-6334-8850

Taiwan - Hsin Chu
Tel: 886-3-6578-300
Fax: 886-3-6578-370

Taiwan - Kaohsiung
Tel: 886-7-536-4818
Fax: 886-7-536-4803

Taiwan - Taipei
Tel: 886-2-2500-6610
Fax: 886-2-2508-0102

Thailand - Bangkok
Tel: 66-2-694-1351
Fax: 66-2-694-1350

EUROPE

Austria - Wels
Tel: 43-7242-2244-39
Fax: 43-7242-2244-393

Denmark - Copenhagen
Tel: 45-4450-2828
Fax: 45-4485-2829

France - Paris
Tel: 33-1-69-53-63-20
Fax: 33-1-69-30-90-79

Germany - Munich
Tel: 49-89-627-144-0
Fax: 49-89-627-144-44

Italy - Milan
Tel: 39-0331-742611
Fax: 39-0331-466781

Netherlands - Drunen
Tel: 31-416-690399
Fax: 31-416-690340

Spain - Madrid
Tel: 34-91-708-08-90
Fax: 34-91-708-08-91

UK - Wokingham
Tel: 44-118-921-5869
Fax: 44-118-921-5820

03/26/09

© 2009 Microchip Technology Inc.