PIC12F635/PIC16F636/639
Data Sheet

8/14-Pin, Flash-Based 8-Bit CMOS Microcontrollers with nanoWatt Technology

*8-bit, 8-pin Devices Protected by Microchip's Low Pin Count Patent: U. S. Patent No. 5,847,450. Additional U.S. and foreign patents and applications may be issued or pending.

© 2007 Microchip Technology Inc.

Note the following details of the code protection feature on Microchip devices:

- Microchip products meet the specification contained in their particular Microchip Data Sheet.
- Microchip believes that its family of products is one of the most secure families of its kind on the market today, when used in the intended manner and under normal conditions.
- There are dishonest and possibly illegal methods used to breach the code protection feature. All of these methods, to our knowledge, require using the Microchip products in a manner outside the operating specifications contained in Microchip's Data Sheets. Most likely, the person doing so is engaged in theft of intellectual property.
- Microchip is willing to work with the customer who is concerned about the integrity of their code.
- Neither Microchip nor any other semiconductor manufacturer can guarantee the security of their code. Code protection does not mean that we are guaranteeing the product as "unbreakable."

Code protection is constantly evolving. We at Microchip are committed to continuously improving the code protection features of our products. Attempts to break Microchip's code protection feature may be a violation of the Digital Millennium Copyright Act. If such acts allow unauthorized access to your software or other copyrighted work, you may have a right to sue for relief under that Act.

Information contained in this publication regarding device applications and the like is provided only for your convenience and may be superseded by updates. It is your responsibility to ensure that your application meets with your specifications. MICROCHIP MAKES NO REPRESENTATIONS OR WARRANTIES OF ANY KIND WHETHER EXPRESS OR IMPLIED, WRITTEN OR ORAL, STATUTORY OR OTHERWISE, RELATED TO THE INFORMATION, INCLUDING BUT NOT LIMITED TO ITS CONDITION, QUALITY, PERFORMANCE, MERCHANTABILITY OR FITNESS FOR PURPOSE**.** Microchip disclaims all liability arising from this information and its use. Use of Microchip devices in life support and/or safety applications is entirely at the buyer's risk, and the buyer agrees to defend, indemnify and hold harmless Microchip from any and all damages, claims, suits, or expenses resulting from such use. No licenses are conveyed, implicitly or otherwise, under any Microchip intellectual property rights.

QUALITY MANAGEMENT SYSTEM
CERTIFIED BY DNV
ISO/TS 16949:2002

Trademarks

The Microchip name and logo, the Microchip logo, Accuron, dsPIC, KEELOQ, KEELOQ logo, microID, MPLAB, PIC, PICmicro, PICSTART, PRO MATE, PowerSmart, rfPIC, and SmartShunt are registered trademarks of Microchip Technology Incorporated in the U.S.A. and other countries.

AmpLab, FilterLab, Linear Active Thermistor, Migratable Memory, MXDEV, MXLAB, PS logo, SEEVAL, SmartSensor and The Embedded Control Solutions Company are registered trademarks of Microchip Technology Incorporated in the U.S.A.

Analog-for-the-Digital Age, Application Maestro, CodeGuard, dsPICDEM, dsPICDEM.net, dsPICworks, ECAN, ECONOMONITOR, FanSense, FlexROM, fuzzyLAB, In-Circuit Serial Programming, ICSP, ICEPIC, Mindi, MiWi, MPASM, MPLAB Certified logo, MPLIB, MPLINK, PICkit, PICDEM, PICDEM.net, PICLAB, PICtail, PowerCal, PowerInfo, PowerMate, PowerTool, REAL ICE, rfLAB, rfPICDEM, Select Mode, Smart Serial, SmartTel, Total Endurance, UNI/O, WiperLock and ZENA are trademarks of Microchip Technology Incorporated in the U.S.A. and other countries.

SQTP is a service mark of Microchip Technology Incorporated in the U.S.A.

All other trademarks mentioned herein are property of their respective companies.

© 2007, Microchip Technology Incorporated, Printed in the U.S.A., All Rights Reserved.

Printed on recycled paper.

Microchip received ISO/TS-16949:2002 certification for its worldwide headquarters, design and wafer fabrication facilities in Chandler and Tempe, Arizona, Gresham, Oregon and Mountain View, California. The Company's quality system processes and procedures are for its PIC® MCUs and dsPIC® DSCs, KEELOQ® code hopping devices, Serial EEPROMs, microperipherals, nonvolatile memory and analog products. In addition, Microchip's quality system for the design and manufacture of development systems is ISO 9001:2000 certified.

PIC12F635/PIC16F636/639

8/14-Pin Flash-Based, 8-Bit CMOS Microcontrollers With nanoWatt Technology

High-Performance RISC CPU:

- Only 35 instructions to learn:
  - All single-cycle instructions except branches
- Operating speed:
  - DC – 20 MHz oscillator/clock input
  - DC – 200 ns instruction cycle
- Interrupt capability
- 8-level deep hardware stack
- Direct, Indirect and Relative Addressing modes

Special Microcontroller Features:

- Precision Internal Oscillator:
  - Factory calibrated to ±1%, typical
  - Software selectable frequency range of 8 MHz to 125 kHz
  - Software tunable
  - Two-Speed Start-up mode
  - Crystal fail detect for critical applications
  - Clock mode switching during operation for power savings
- Clock mode switching for low-power operation
- Power-Saving Sleep mode
- Wide operating voltage range (2.0V-5.5V)
- Industrial and Extended Temperature range
- Power-on Reset (POR)
- Wake-up Reset (WUR)
- Independent weak pull-up/pull-down resistors
- Programmable Low-Voltage Detect (PLVD)
- Power-up Timer (PWRT) and Oscillator Start-up Timer (OST)
- Brown-out Reset (BOR) with software control option
- Enhanced Low-Current Watchdog Timer (WDT) with on-chip oscillator (software selectable nominal 268 seconds with full prescaler) with software enable
- Multiplexed Master Clear with pull-up/input pin
- Programmable code protection (program and data independent)
- High-Endurance Flash/EEPROM cell:
  - 100,000 write Flash endurance
  - 1,000,000 write EEPROM endurance
  - Flash/Data EEPROM Retention: > 40 years

Low-Power Features:

- Standby Current:
  - 1 nA @ 2.0V, typical
- Operating Current:
  - 8.5 µA @ 32 kHz, 2.0V, typical
  - 100 µA @ 1 MHz, 2.0V, typical
- Watchdog Timer Current:
  - 1 µA @ 2.0V, typical

Peripheral Features:

- 6/12 I/O pins with individual direction control:
  - High-current source/sink for direct LED drive
  - Interrupt-on-change pin
  - Individually programmable weak pull-ups/ pull-downs
  - Ultra Low-Power Wake-up
- Analog Comparator module with:
  - Up to two analog comparators
  - Programmable On-chip Voltage Reference (CV_{REF}) module (% of V_{DD})
  - Comparator inputs and outputs externally accessible
- Timer0: 8-bit timer/counter with 8-bit programmable prescaler
- Enhanced Timer1:
  - 16-bit timer/counter with prescaler
  - External Timer1 Gate (count enable)
  - Option to use OSC1 and OSC2 in LP mode as Timer1 oscillator if INTOSC mode selected
- KEELOQ® compatible hardware Cryptographic module
- In-Circuit Serial Programming™ (ICSP™) via two pins

Low-Frequency Analog Front-End Features (PIC16F639 only):

- Three input pins for 125 kHz LF input signals
- High input detection sensitivity (3 mV_{PP}, typical)
- Demodulated data, Carrier clock or RSSI output selection
- Input carrier frequency: 125 kHz, typical
- Input modulation frequency: 4 kHz, maximum
- 8 internal Configuration registers
- Bidirectional transponder communication (LF talk back)
- Programmable antenna tuning capacitance (up to 63 pF, 1 pF/step)
- Low standby current: 5 µA (with 3 channels enabled), typical
- Low operating current: 15 µA (with 3 channels enabled), typical
- Serial Peripheral Interface (SPI) with internal MCU and external devices
- Supports Battery Back-up mode and batteryless operation with external circuits

© 2007 Microchip Technology Inc.

Device	Program Memory	Data Memory		I/O	Comparators	Low Frequency Analog Front-End
	Flash (words)	SRAM (bytes)	EEPROM (bytes)			
PIC12F635	1024	64	128	6	1	N
PIC16F636	2048	128	256	12	2	N
PIC16F639	2048	128	256	12	2	Y

Note 1: Any references to PORTA, RAn, TRISA and TRISAn refer to GPIO, GPn, TRISIO and TRISIOn, respectively.

2: V_{DDT} is the supply voltage of the Analog Front-End section (PIC16F639 only). V_{DDT} is treated as V_{DD} in this document unless otherwise stated.

3: V_{SST} is the ground reference voltage of the Analog Front-End section (PIC16F639 only). V_{SST} is treated as V_{SS} in this document unless otherwise stated.

© 2007 Microchip Technology Inc.

8-Pin Diagrams (PDIP, SOIC, DFN, DFN-S)

PDIP, SOIC

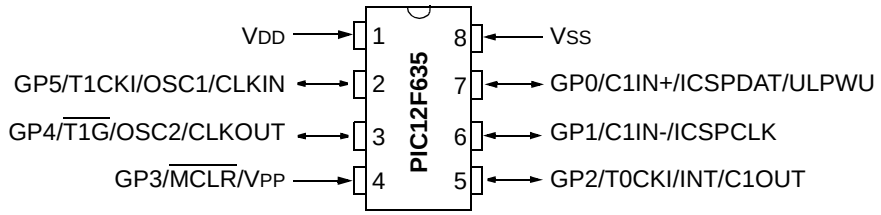

DFN, DFN-S

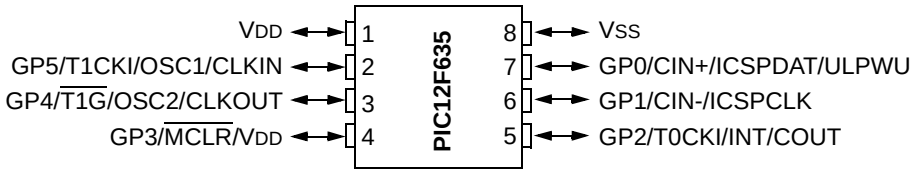

TABLE 1: 8-PIN SUMMARY (PDIP, SOIC, DFN, DFN-S)

I/O	Pin	Comparators	Timer	Interrupts	Pull-ups	Basic
GP0	7	C1IN+	—	IOC	Y	ICSPDAT/ULPWU
GP1	6	C1IN-	—	IOC	Y	ICSPCLK
GP2	5	C1OUT	T0CKI	INT/IOC	Y	—
GP3(1)	4	—	—	IOC	Y(2)	$\overline{MCLR}$/VPP
GP4	3	—	$\overline{T1G}$	IOC	Y	OSC2/CLKOUT
GP5	2	—	T1CKI	IOC	Y	OSC1/CLKIN
—	1	—	—	—	—	VDD
—	8	—	—	—	—	VSS

Note 1: Input only.
2: Only when pin is configured for external $\overline{MCLR}$.

14-Pin Diagram (PDIP, SOIC, TSSOP)

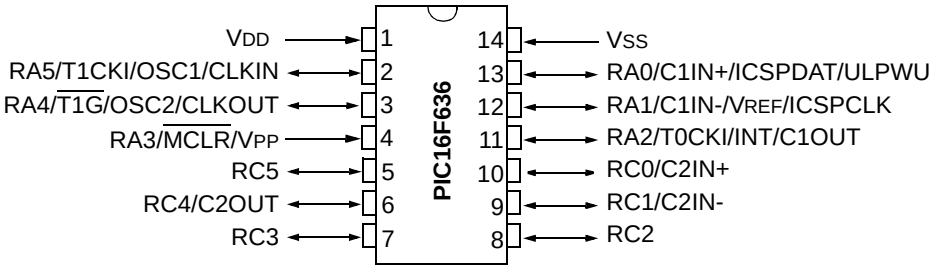

TABLE 2: 14-PIN SUMMARY (PDIP, SOIC, TSSOP)

I/O	Pin	Comparators	Timer	Interrupts	Pull-ups	Basic
RA0	13	C1IN+	—	IOC	Y	ICSPDAT/ULPWU
RA1	12	C1IN-	—	IOC	Y	VREF/ICSPCLK
RA2	11	C1OUT	T0CKI	INT/IOC	Y	—
RA3(1)	4	—	—	IOC	Y(2)	$\overline{\text{MCLR}}$/VPP
RA4	3	—	$\overline{\text{T1G}}$	IOC	Y	OSC2/CLKOUT
RA5	2	—	T1CKI	IOC	Y	OSC1/CLKIN
RC0	10	C2IN+	—	—	—	—
RC1	9	C2IN-	—	—	—	—
RC2	8	—	—	—	—	—
RC3	7	—	—	—	—	—
RC4	6	C2OUT	—	—	—	—
RC5	5	—	—	—	—	—
—	1	—	—	—	—	VDD
—	14	—	—	—	—	VSS

Note 1: Input only.

2: Only when pin is configured for external $\overline{\text{MCLR}}$.

© 2007 Microchip Technology Inc.

16-Pin Diagram

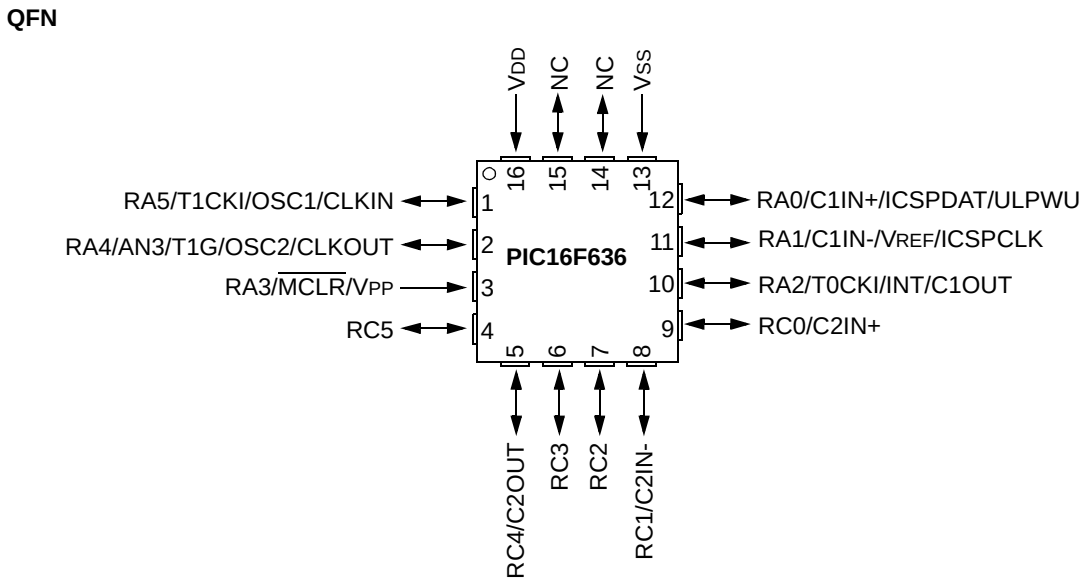

TABLE 3: 16-PIN SUMMARY

I/O	Pin	Comparators	Timer	Interrupts	Pull-ups	Basic
RA0	12	C1IN+	—	IOC	Y	ICSPDAT/ULPWU
RA1	11	C1IN-	—	IOC	Y	VREF/ICSPCLK
RA2	10	C1OUT	T0CKI	INT/IOC	Y	—
RA3(1)	3	—	—	IOC	Y(2)	$\overline{\text{MCLR}}$/VPP
RA4	2	—	$\overline{\text{T1G}}$	IOC	Y	OSC2/CLKOUT
RA5	1	—	T1CKI	IOC	Y	OSC1/CLKIN
RC0	9	C2IN+	—	—	—	—
RC1	8	C2IN-	—	—	—	—
RC2	7	—	—	—	—	—
RC3	6	—	—	—	—	—
RC4	5	C2OUT	—	—	—	—
RC5	4	—	—	—	—	—
—	16	—	—	—	—	VDD
—	13	—	—	—	—	VSS
—	14	—	—	—	—	NC
—	15	—	—	—	—	NC

Note 1: Input only.

2: Only when pin is configured for external $\overline{\text{MCLR}}$.

20-Pin Diagram

SSOP

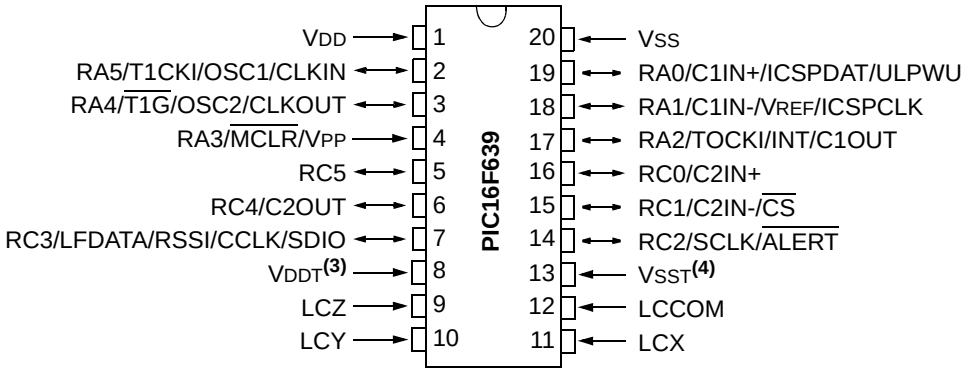

TABLE 4: 20-PIN SUMMARY

I/O	Pin	Analog Front-End	Comparators	Timer	Interrupts	Pull-ups	Basic
RA0	19	—	C1IN+	—	IOC	Y	ICSPDAT/ULPWU
RA1	18	—	C1IN-	—	IOC	Y	VREF/ICSPCLK
RA2	17	—	C1OUT	T0CKI	INT/IOC	Y	—
RA3(1)	4	—	—	—	IOC	Y(2)	$\overline{\text{MCLR}}$/VPP
RA4	3	—	—	$\overline{\text{T1G}}$	IOC	Y	OSC2/CLKOUT
RA5	2	—	—	T1CKI	IOC	Y	OSC1/CLKIN
RC0	16	—	C2IN+	—	—	—	—
RC1	15	—	C2IN-	—	—	—	$\overline{\text{CS}}$
RC2	14	$\overline{\text{ALERT}}$	—	—	—	—	SCLK
RC3	7	LFDATA/RSSI	—	—	—	—	CCLK/SDIO
RC4	6	—	C2OUT	—	—	—	—
RC5	5	—	—	—	—	—	—
—	8	—	—	—	—	—	VDDT(3)
—	13	—	—	—	—	—	VSST(4)
—	11	LCX	—	—	—	—	—
—	10	LCY	—	—	—	—	—
—	9	LCZ	—	—	—	—	—
—	12	LCCOM	—	—	—	—	—
—	1	—	—	—	—	—	VDD
—	20	—	—	—	—	—	VSS

Note 1: Input only.

2: Only when pin is configured for external $\overline{\text{MCLR}}$.

3: VDDT is the supply voltage of the Analog Front-End section (PIC16F639 only). VDDT is treated as VDD in this document unless otherwise stated.

4: VSST is the ground reference voltage of the Analog Front-End section (PIC16F639 only). VSST is treated as VSS in this document unless otherwise stated.

© 2007 Microchip Technology Inc.

Table of Contents

1.0 Device Overview 9
2.0 Memory Organization 17
3.0 Clock Sources 35
4.0 I/O Ports 47
5.0 Timer0 Module 61
6.0 Timer1 Module with Gate Control 64
7.0 Comparator Module 71
8.0 Programmable Low-Voltage Detect (PLVD) Module 87
9.0 Data EEPROM Memory 91
10.0 KEELOQ® Compatible Cryptographic Module 95
11.0 Analog Front-End (AFE) Functional Description (PIC16F639 Only) 97
12.0 Special Features of the CPU 129
13.0 Instruction Set Summary 149
14.0 Development Support 159
15.0 Electrical Specifications 163
16.0 DC and AC Characteristics Graphs and Tables 191
17.0 Packaging Information 211
On-Line Support 223
Systems Information and Upgrade Hot Line 223
Reader Response 224
Appendix A: Data Sheet Revision History 225
Product Identification System 231
Worldwide Sales and Service 232

TO OUR VALUED CUSTOMERS

It is our intention to provide our valued customers with the best documentation possible to ensure successful use of your Microchip products. To this end, we will continue to improve our publications to better suit your needs. Our publications will be refined and enhanced as new volumes and updates are introduced.

If you have any questions or comments regarding this publication, please contact the Marketing Communications Department via E-mail at **docerrors@microchip.com** or fax the **Reader Response Form** in the back of this data sheet to (480) 792-4150. We welcome your feedback.

Most Current Data Sheet

To obtain the most up-to-date version of this data sheet, please register at our Worldwide Web site at:

http://www.microchip.com

You can determine the version of a data sheet by examining its literature number found on the bottom outside corner of any page. The last character of the literature number is the version number, (e.g., DS30000A is version A of document DS30000).

Errata

An errata sheet, describing minor operational differences from the data sheet and recommended workarounds, may exist for current devices. As device/documentation issues become known to us, we will publish an errata sheet. The errata will specify the revision of silicon and revision of document to which it applies.

To determine if an errata sheet exists for a particular device, please check with one of the following:

- Microchip's Worldwide Web site; http://www.microchip.com
- Your local Microchip sales office (see last page)

When contacting a sales office, please specify which device, revision of silicon and data sheet (include literature number) you are using.

Customer Notification System

Register on our web site at **www.microchip.com** to receive the most current information on all of our products.

NOTES:

© 2007 Microchip Technology Inc.

1.0 DEVICE OVERVIEW

This document contains device specific information for the PIC12F635/PIC16F636/639 devices.

Block Diagrams and pinout descriptions of the devices are as follows:

- PIC12F635 (Figure 1-1, Table 1-1)
- PIC16F636 (Figure 1-2, Table 1-2)
- PIC16F639 (Figure 1-3, Table 1-3)

FIGURE 1-1: PIC12F635 BLOCK DIAGRAM

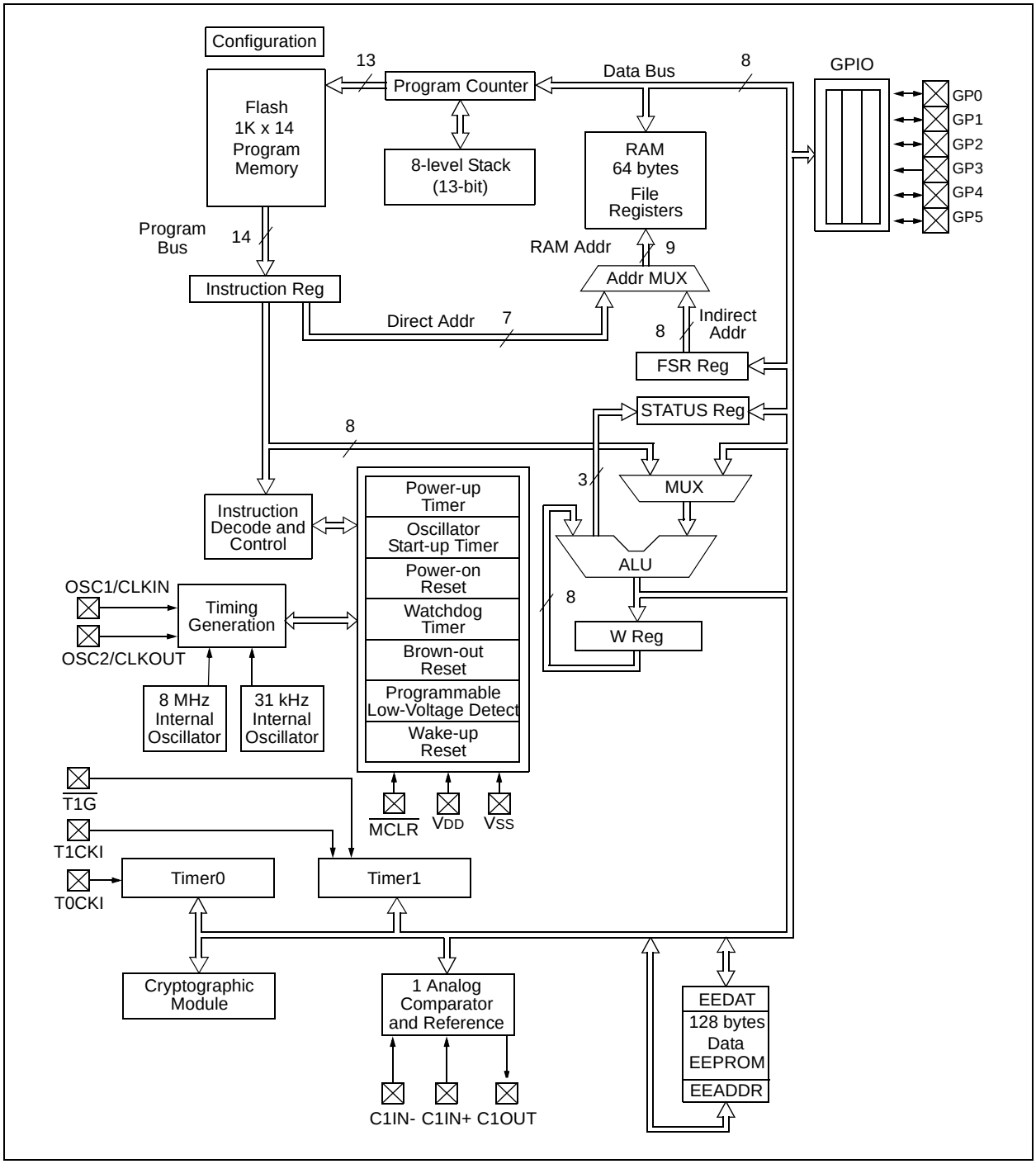

FIGURE 1-2: PIC16F636 BLOCK DIAGRAM

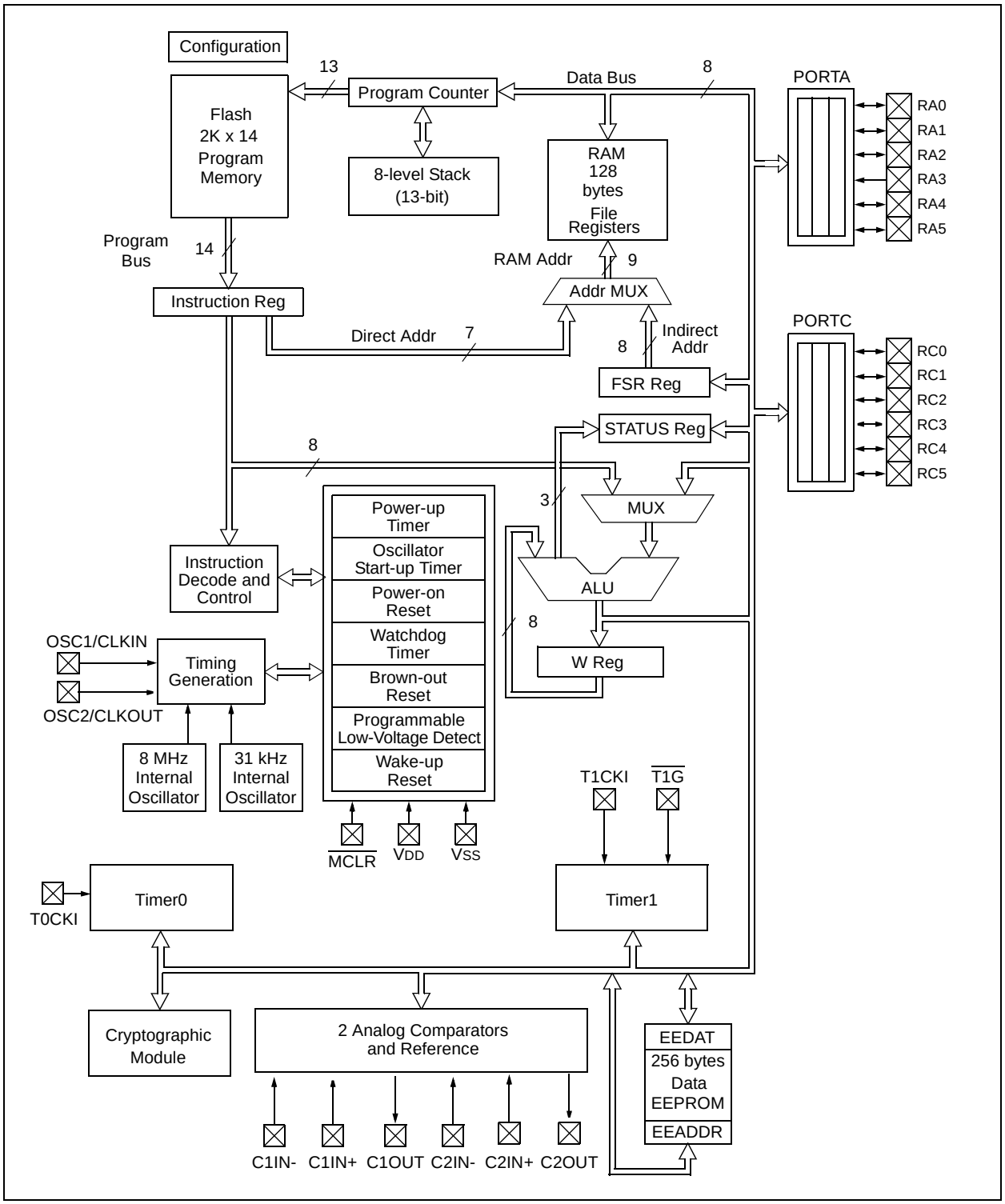

© 2007 Microchip Technology Inc.

FIGURE 1-3: PIC16F639 BLOCK DIAGRAM

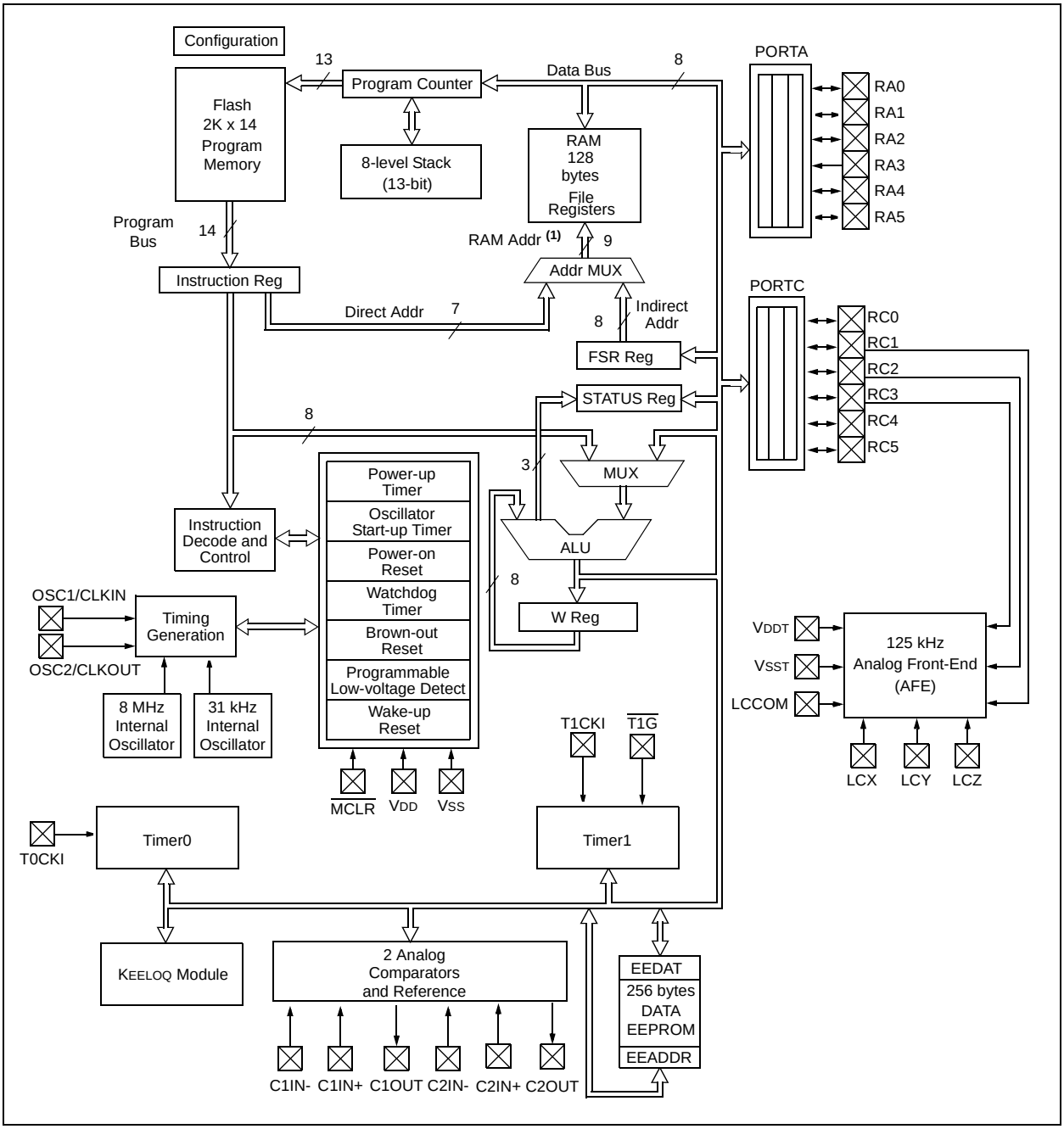

TABLE 1-1: PIC12F635 PINOUT DESCRIPTIONS

Name	Function	Input Type	Output Type	Description
GP0/C1IN+/ICSPDAT/ULPWU	GP0	TTL	—	General purpose I/O. Individually controlled interrupt-on-change. Individually enabled pull-up/pull-down. Selectable Ultra Low-Power Wake-up pin.
	C1IN+	AN	—	Comparator 1 input – positive.
	ICSPDAT	TTL	CMOS	Serial programming data I/O.
	ULPWU	AN	—	Ultra Low-Power Wake-up input.
GP1/C1IN-/ICSPCLK	GP1	TTL	CMOS	General purpose I/O. Individually controlled interrupt-on-change. Individually enabled pull-up/pull-down.
	C1IN-	AN	—	Comparator 1 input – negative.
	ICSPCLK	ST	—	Serial programming clock.
GP2/T0CKI/INT/C1OUT	GP2	ST	CMOS	General purpose I/O. Individually controlled interrupt-on-change. Individually enabled pull-up/pull-down.
	T0CKI	ST	—	External clock for Timer0.
	INT	ST	—	External interrupt.
	C1OUT	—	CMOS	Comparator 1 output.
GP3/$\overline{\text{MCLR}}$/VPP	GP3	TTL	—	General purpose input. Individually controlled interrupt-on-change.
	$\overline{\text{MCLR}}$	ST	—	Master Clear Reset. Pull-up enabled when configured as $\overline{\text{MCLR}}$.
	VPP	HV	—	Programming voltage.
GP4/$\overline{\text{T1G}}$/OSC2/CLKOUT	GP4	TTL	CMOS	General purpose I/O. Individually controlled interrupt-on-change. Individually enabled pull-up/pull-down.
	$\overline{\text{T1G}}$	ST	—	Timer1 gate.
	OSC2	—	XTAL	XTAL connection.
	CLKOUT	—	CMOS	TOSC/4 reference clock.
GP5/T1CKI/OSC1/CLKIN	GP5	TTL	CMOS	General purpose I/O. Individually controlled interrupt-on-change. Individually enabled pull-up/pull-down.
	T1CKI	ST	—	Timer1 clock.
	OSC1	XTAL	—	XTAL connection.
	CLKIN	ST	—	TOSC reference clock.
VDD	VDD	D	—	Power supply for microcontroller.
VSS	VSS	D	—	Ground reference for microcontroller.

Legend: AN = Analog input or output; CMOS = CMOS compatible input or output; D = Direct
HV = High Voltage; ST = Schmitt Trigger input with CMOS levels
TTL = TTL compatible input; XTAL = Crystal

© 2007 Microchip Technology Inc.

TABLE 1-2: PIC16F636 PINOUT DESCRIPTIONS

Name	Function	Input Type	Output Type	Description
RA0/C1IN+/ICSPDAT/ULPWU	RA0	TTL	—	General purpose I/O. Individually controlled interrupt-on-change. Individually enabled pull-up/pull-down. Selectable Ultra Low-Power Wake-up pin.
	C1IN+	AN	—	Comparator 1 input – positive.
	ICSPDAT	TTL	CMOS	Serial programming data I/O.
	ULPWU	AN	—	Ultra Low-Power Wake-up input.
RA1/C1IN-/VREF/ICSPCLK	RA1	TTL	CMOS	General purpose I/O. Individually controlled interrupt-on-change. Individually enabled pull-up/pull-down.
	C1IN-	AN	—	Comparator 1 input – negative.
	VREF	AN	—	External voltage reference
	ICSPCLK	ST	—	Serial programming clock.
RA2/T0CKI/INT/C1OUT	RA2	ST	CMOS	General purpose I/O. Individually controlled interrupt-on-change. Individually enabled pull-up/pull-down.
	T0CKI	ST	—	External clock for Timer0.
	INT	ST	—	External interrupt.
	C1OUT	—	CMOS	Comparator 1 output.
RA3/$\overline{\text{MCLR}}$/VPP	RA3	TTL	—	General purpose input. Individually controlled interrupt-on-change.
	$\overline{\text{MCLR}}$	ST	—	Master Clear Reset. Pull-up enabled when configured as $\overline{\text{MCLR}}$.
	VPP	HV	—	Programming voltage.
RA4/$\overline{\text{T1G}}$/OSC2/CLKOUT	RA4	TTL	CMOS	General purpose I/O. Individually controlled interrupt-on-change. Individually enabled pull-up/pull-down.
	$\overline{\text{T1G}}$	ST	—	Timer1 gate.
	OSC2	—	XTAL	XTAL connection.
	CLKOUT	—	CMOS	TOSC/4 reference clock.
RA5/T1CKI/OSC1/CLKIN	RA5	TTL	CMOS	General purpose I/O. Individually controlled interrupt-on-change. Individually enabled pull-up/pull-down.
	T1CKI	ST	—	Timer1 clock.
	OSC1	XTAL	—	XTAL connection.
	CLKIN	ST	—	TOSC reference clock.
RC0/C2IN+	RC0	TTL	CMOS	General purpose I/O.
	C2IN+	AN	—	Comparator 1 input – positive.
RC1/C2IN-	RC1	TTL	CMOS	General purpose I/O.
	C2IN-	AN	—	Comparator 1 input – negative.
RC2	RC2	TTL	CMOS	General purpose I/O.
RC3	RC3	TTL	CMOS	General purpose I/O.
RC4/C2OUT	RC4	TTL	CMOS	General purpose I/O.
	C2OUT	—	CMOS	Comparator 2 output.
RC5	RC5	TTL	CMOS	General purpose I/O.
VDD	VDD	D	—	Power supply for microcontroller.
VSS	VSS	D	—	Ground reference for microcontroller.

Legend: AN = Analog input or output; CMOS = CMOS compatible input or output; D = Direct; HV = High Voltage; ST = Schmitt Trigger input with CMOS levels; TTL = TTL compatible input; XTAL = Crystal

TABLE 1-3: PIC16F639 PINOUT DESCRIPTIONS

Name	Function	Input Type	Output Type	Description
LCCOM	LCCOM	AN	—	Common reference for analog inputs.
LCX	LCX	AN	—	125 kHz analog X channel input.
LCY	LCY	AN	—	125 kHz analog Y channel input.
LCZ	LCZ	AN	—	125 kHz analog Z channel input.
RA0/C1IN+/ICSPDAT/ULPWU	RA0	TTL	—	General purpose I/O. Individually controlled interrupt-on-change. Individually enabled pull-up/pull-down. Selectable Ultra Low-Power Wake-up pin.
	C1IN+	AN	—	Comparator1 input – positive.
	ICSPDAT	TTL	CMOS	Serial Programming Data IO.
	ULPWU	AN	—	Ultra Low-Power Wake-up input.
RA1/C1IN-/VREF/ICSPCLK	RA1	TTL	CMOS	General purpose I/O. Individually controlled interrupt-on-change. Individually enabled pull-up/pull-down.
	C1IN-	AN	—	Comparator1 input – negative.
	VREF	AN	—	External voltage reference
	ICSPCLK	ST	—	Serial Programming Clock.
RA2/T0CKI/INT/C1OUT	RA2	ST	CMOS	General purpose I/O. Individually controlled interrupt-on-change. Individually enabled pull-up/pull-down.
	T0CKI	ST	—	External clock for Timer0.
	INT	ST	—	External Interrupt.
	C1OUT	—	CMOS	Comparator1 output.
RA3/$\overline{\text{MCLR}}$/VPP	RA3	TTL	—	General purpose input. Individually controlled interrupt-on-change.
	$\overline{\text{MCLR}}$	ST	—	Master Clear Reset. Pull-up enabled when configured as $\overline{\text{MCLR}}$.
	VPP	HV	—	Programming voltage.
RA4/$\overline{\text{T1G}}$/OSC2/CLKOUT	RA4	TTL	CMOS	General purpose I/O. Individually controlled interrupt-on-change. Individually enabled pull-up/pull-down.
	$\overline{\text{T1G}}$	ST	—	Timer1 gate.
	OSC2	—	XTAL	XTAL connection.
	CLKOUT	—	CMOS	TOSC reference clock.
RA5/T1CKI/OSC1/CLKIN	RA5	TTL	CMOS	General purpose I/O. Individually controlled interrupt-on-change. Individually enabled pull-up/pull-down.
	T1CKI	ST	—	Timer1 clock.
	OSC1	XTAL	—	XTAL connection.
	CLKIN	ST	—	TOSC/4 reference clock.
RC0/C2IN+	RC0	TTL	CMOS	General purpose I/O.
	C2IN+	AN	—	Comparator1 input – positive.
RC1/C2IN-/$\overline{\text{CS}}$	RC1	TTL	CMOS	General purpose I/O.
	C2IN-	AN	—	Comparator1 input – negative.
	$\overline{\text{CS}}$	TTL	—	Chip select input for SPI communication with internal pull-up resistor.
RC2/SCLK/$\overline{\text{ALERT}}$	RC2	TTL	CMOS	General purpose I/O.
	SCLK	TTL	—	Digital clock input for SPI communication.
	$\overline{\text{ALERT}}$	—	OD	Output with internal pull-up resistor for AFE error signal.

Legend: AN = Analog input or output; CMOS = CMOS compatible input or output; D = Direct; HV = High Voltage; ST = Schmitt Trigger input with CMOS levels; OD = Open Drain; TTL = TTL compatible input; XTAL = Crystal

© 2007 Microchip Technology Inc.

TABLE 1-3: PIC16F639 PINOUT DESCRIPTIONS (CONTINUED)

Name	Function	Input Type	Output Type	Description
RC3/LFDATA/RSSI/CCLK/SDO	RC3	TTL	CMOS	General purpose I/O.
	LFDATA	—	CMOS	Digital output representation of analog input signal to LC pins.
	RSSI	—	Current	Received signal strength indicator. Analog current that is proportional to input amplitude.
	CCLK	—	—	Carrier clock output.
	SDIO	TTL	CMOS	Input/Output for SPI communication.
RC4/C2OUT	RC4	TTL	CMOS	General purpose I/O.
	C2OUT	—	CMOS	Comparator2 output.
RC5	RC5	TTL	CMOS	General purpose I/O.
V_{DDT}	V_{DDT}	D	—	Power supply for Analog Front-End. In this document, V_{DDT} is treated the same as V_{DD}, unless otherwise stated.
V_{SST}	V_{SST}	D	—	Ground reference for Analog Front-End. In this document, V_{SST} is treated the same as V_{SS}, unless otherwise stated.
V_{DD}	V_{DD}	D	—	Power supply for microcontroller.
V_{SS}	V_{SS}	D	—	Ground reference for microcontroller.

Legend: AN = Analog input or output; CMOS = CMOS compatible input or output; D = Direct; HV = High Voltage; ST = Schmitt Trigger input with CMOS levels; OD = Open Drain; TTL = TTL compatible input; XTAL = Crystal

NOTES:

© 2007 Microchip Technology Inc.

2.0 MEMORY ORGANIZATION

2.1 Program Memory Organization

The PIC12F635/PIC16F636/639 devices have a 13-bit program counter capable of addressing an 8K x 14 program memory space. Only the first 1K x 14 (0000h-03FFh, for the PIC12F635) and 2K x 14 (0000h-07FFh, for the PIC16F636/639) is physically implemented. Accessing a location above these boundaries will cause a wraparound within the first 2K x 14 space. The Reset vector is at 0000h and the interrupt vector is at 0004h (see Figure 2-1).

2.2 Data Memory Organization

The data memory (see Figure 2-2) is partitioned into two banks, which contain the General Purpose Registers (GPR) and the Special Function Registers (SFR). The Special Function Registers are located in the first 32 locations of each bank. Register locations 20h-7Fh in Bank 0 and A0h-BFh in Bank 1 are GPRs, implemented as static RAM for the PIC16F636/639. For the PIC12F635, register locations 40h through 7Fh are GPRs implemented as static RAM. Register locations F0h-FFh in Bank 1 point to addresses 70h-7Fh in Bank 0. All other RAM is unimplemented and returns '0' when read. RP0 of the STATUS register is the bank select bit.

RP1	RP0		
0	0	→	Bank 0 is selected
0	1	→	Bank 1 is selected
1	0	→	Bank 2 is selected
1	1	→	Bank 3 is selected

FIGURE 2-1: PROGRAM MEMORY MAP AND STACK OF THE PIC12F635

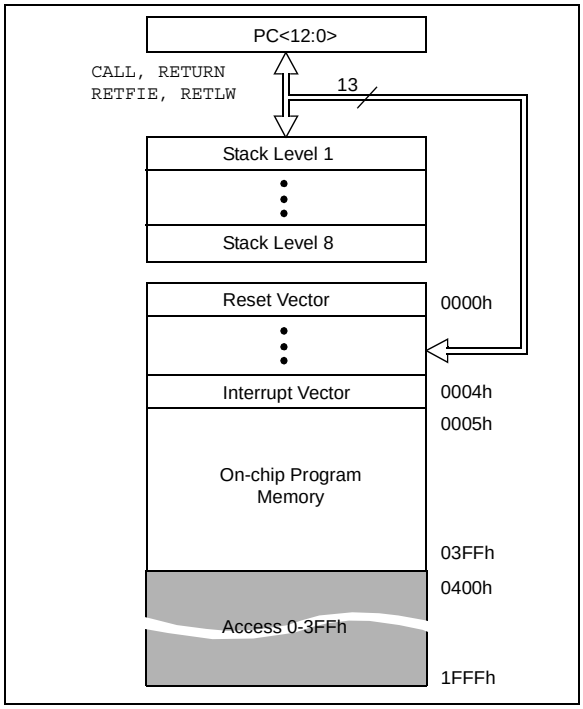

FIGURE 2-2: PROGRAM MEMORY MAP AND STACK OF THE PIC16F636/639

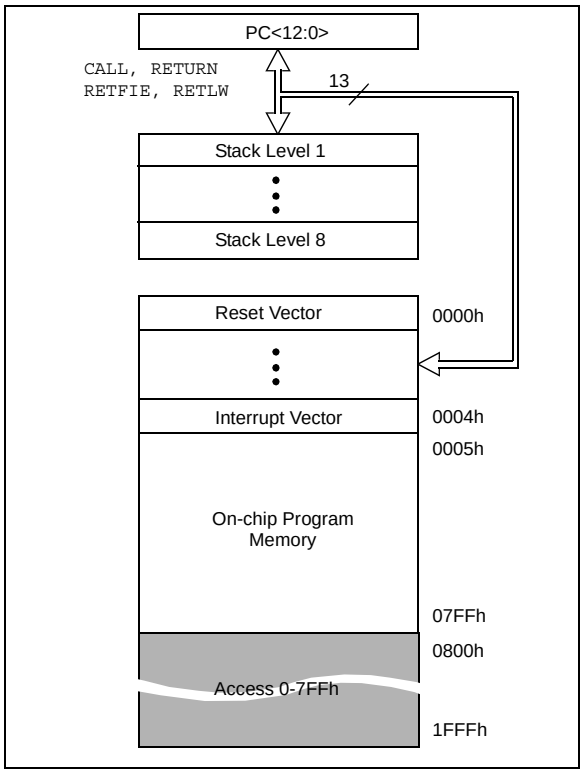

2.2.1 GENERAL PURPOSE REGISTER

The register file is organized as 64 x 8 for the PIC12F635 and 128 x 8 for the PIC16F636/639. Each register is accessed, either directly or indirectly, through the File Select Register, FSR (see **Section 2.4 “Indirect Addressing, INDF and FSR Registers”**).

2.2.2 SPECIAL FUNCTION REGISTERS

The Special Function Registers (SFRs) are registers used by the CPU and peripheral functions for controlling the desired operation of the device (see Figure 2-1). These registers are static RAM.

The special registers can be classified into two sets: core and peripheral. The Special Function Registers associated with the “core” are described in this section. Those related to the operation of the peripheral features are described in the section of that peripheral feature.

© 2007 Microchip Technology Inc.

FIGURE 2-3: PIC12F635 SPECIAL FUNCTION REGISTERS

	File Address		File Address		File Address		File Address
Indirect addr.(1)	00h	Indirect addr.(1)	80h	Accesses 00h-0Bh	100h	Accesses 80h-8Bh	180h
TMR0	01h	OPTION_REG	81h		101h		181h
PCL	02h	PCL	82h		102h		182h
STATUS	03h	STATUS	83h		103h		183h
FSR	04h	FSR	84h		104h		184h
GPIO	05h	TRISIO	85h		105h		185h
	06h		86h		106h		186h
	07h		87h		107h		187h
	08h		88h		108h		188h
	09h		89h		109h		189h
PCLATH	0Ah	PCLATH	8Ah		10Ah		18Ah
INTCON	0Bh	INTCON	8Bh		10Bh		18Bh
PIR1	0Ch	PIE1	8Ch		10Ch		18Ch
	0Dh		8Dh		10Dh		18Dh
TMR1L	0Eh	PCON	8Eh		10Eh		18Eh
TMR1H	0Fh	OSCCON	8Fh		10Fh		18Fh
T1CON	10h	OSCTUNE	90h	CRCON	110h		190h
	11h		91h	CRDAT0(2)	111h		191h
	12h		92h	CRDAT1(2)	112h		192h
	13h		93h	CRDAT2(2)	113h		193h
	14h	LVDCON	94h	CRDAT3(2)	114h		194h
	15h	WPUDA	95h		115h		195h
	16h	IOCA	96h		116h		196h
	17h	WDA	97h		117h		197h
WDTCON	18h		98h		118h		198h
CMCON0	19h	VRCON	99h		119h		199h
CMCON1	1Ah	EEDAT	9Ah		11Ah		19Ah
	1Bh	EEADR	9Bh		11Bh		19Bh
	1Ch	EECON1	9Ch		11Ch		19Ch
	1Dh	EECON2(1)	9Dh		11Dh		19Dh
	1Eh		9Eh		11Eh		19Eh
	1Fh		9Fh		11Fh		19Fh
	20h		A0h		120h		1A0h
	3Fh						
General Purpose Register 64 Bytes	40h						
			EFh		16Fh		1EFh
		Accesses 70h-7Fh	F0h	Accesses 70h-7Fh	170h	Accesses Bank 0	1F0h
	7Fh		FFh		17Fh		1FFh
Bank 0		Bank 1		Bank 2		Bank 3	

Unimplemented data memory locations, read as '0'.

Note 1: Not a physical register.

2: CRDAT<3:0> registers are KEELOQ® hardware peripheral related registers and require the execution of the "KEELOQ® Encoder License Agreement" regarding implementation of the module and access to related registers. The "KEELOQ® Encoder License Agreement" may be accessed through the Microchip web site located at www.microchip.com/KEELOQ or by contacting your local Microchip Sales Representative.

FIGURE 2-4: PIC16F636/639 SPECIAL FUNCTION REGISTERS

	File Address		File Address		File Address		File Address
Indirect addr.(1)	00h	Indirect addr. (1)	80h	Accesses 00h-0Bh	100h	Accesses 80h-8Bh	180h
TMR0	01h	OPTION_REG	81h		101h		181h
PCL	02h	PCL	82h		102h		182h
STATUS	03h	STATUS	83h		103h		183h
FSR	04h	FSR	84h		104h		184h
PORTA	05h	TRISA	85h		105h		185h
	06h		86h		106h		186h
PORTC	07h	TRISC	87h		107h		187h
	08h		88h		108h		188h
	09h		89h		109h		189h
PCLATH	0Ah	PCLATH	8Ah		10Ah		18Ah
INTCON	0Bh	INTCON	8Bh		10Bh		18Bh
PIR1	0Ch	PIE1	8Ch		10Ch		18Ch
	0Dh		8Dh		10Dh		18Dh
TMR1L	0Eh	PCON	8Eh		10Eh		18Eh
TMR1H	0Fh	OSCCON	8Fh		10Fh		18Fh
T1CON	10h	OSCTUNE	90h	CRCON	110h		190h
	11h		91h	CRDAT0(2)	111h		191h
	12h		92h	CRDAT1(2)	112h		192h
	13h		93h	CRDAT2(2)	113h		193h
	14h	LVDCON	94h	CRDAT3(2)	114h		194h
	15h	WPUDA	95h		115h		195h
	16h	IOCA	96h		116h		196h
	17h	WDA	97h		117h		197h
WDTCON	18h		98h		118h		198h
CMCON0	19h	VRCON	99h		119h		199h
CMCON1	1Ah	EEDAT	9Ah		11Ah		19Ah
	1Bh	EEADR	9Bh		11Bh		19Bh
	1Ch	EECON1	9Ch		11Ch		19Ch
	1Dh	EECON2(1)	9Dh		11Dh		19Dh
	1Eh		9Eh		11Eh		19Eh
	1Fh		9Fh		11Fh		19Fh
General Purpose Register 96 Bytes	20h	General Purpose Register 32 Bytes	A0h		120h		1A0h
			BFh				
			C0h				
			EFh		16Fh		1EFh
		Accesses 70h-7Fh	F0h	Accesses 70h-7Fh	170h	Accesses Bank 0	1F0h
	7Fh		FFh		17Fh		1FFh
Bank 0		Bank 1		Bank 2		Bank 3	

Unimplemented data memory locations, read as '0'.

Note 1: Not a physical register.

2: CRDAT<3:0> registers are KEELOQ hardware peripheral related registers and require the execution of the "KEELOQ® Encoder License Agreement" regarding implementation of the module and access to related registers. The "KEELOQ® Encoder License Agreement" may be accessed through the Microchip web site located at www.microchip.com/KEELOQ or by contacting your local Microchip Sales Representative.

© 2007 Microchip Technology Inc.

TABLE 2-1: PIC12F635 SPECIAL FUNCTION REGISTERS SUMMARY BANK 0

Addr	Name	Bit 7	Bit 6	Bit 5	Bit 4	Bit 3	Bit 2	Bit 1	Bit 0	Value on POR/BOR/ WUR	Page
Bank 0											
00h	INDF	Addressing this location uses contents of FSR to address data memory (not a physical register)								xxxx xxxx	32,137
01h	TMR0	Timer0 Module Register								xxxx xxxx	61,137
02h	PCL	Program Counter's (PC) Least Significant Byte								0000 0000	32,137
03h	STATUS	IRP	RP1	RP0	$\overline{TO}$	$\overline{PD}$	Z	DC	C	0001 1xxx	26,137
04h	FSR	Indirect Data Memory Address Pointer								xxxx xxxx	32,137
05h	GPIO	—	—	GP5	GP4	GP3	GP2	GP1	GP0	--xx xx00	47,137
06h	—	Unimplemented								—	—
07h	—	Unimplemented								—	—
08h	—	Unimplemented								—	—
09h	—	Unimplemented								—	—
0Ah	PCLATH	—	—	—	Write Buffer for upper 5 bits of Program Counter					---0 0000	32,137
0Bh	INTCON	GIE	PEIE	T0IE	INTE	RAIE	T0IF	INTF	RAIF(2)	0000 000x	28,137
0Ch	PIR1	EEIF	LVDIF	CRIF	—	C1IF	OSFIF	—	TMR1IF	000- 00-0	30,137
0Dh	—	Unimplemented								—	—
0Eh	TMR1L	Holding Register for the Least Significant Byte of the 16-bit TMR1								xxxx xxxx	64,137
0Fh	TMR1H	Holding Register for the Most Significant Byte of the 16-bit TMR1								xxxx xxxx	64,137
10h	T1CON	T1GINV	TMR1GE	T1CKPS1	T1CKPS0	T1OSCEN	$\overline{T1SYNC}$	TMR1CS	TMR1ON	0000 0000	68,137
11h	—	Unimplemented								—	—
12h	—	Unimplemented								—	—
13h	—	Unimplemented								—	—
14h	—	Unimplemented								—	—
15h	—	Unimplemented								—	—
16h	—	Unimplemented								—	—
17h	—	Unimplemented								—	—
18h	WDTCON	—	—	—	WDTPS3	WDTPS2	WDTPS1	WDTPS0	SWDTEN	---0 1000	144,137
19h	CMCON0	—	COUT	—	CINV	CIS	CM2	CM1	CM0	-0-0 0000	79,137
1Ah	CMCON1	—	—	—	—	—	—	T1GSS	CMSYNC	---- --10	82,137
1Bh	—	Unimplemented								—	—
1Ch	—	Unimplemented								—	—
1Dh	—	Unimplemented								—	—
1Eh	—	Unimplemented								—	—
1Fh	—	Unimplemented								—	—

Legend: – = Unimplemented locations read as '0', u = unchanged, x = unknown, q = value depends on condition, shaded = unimplemented

Note 1: Other (non Power-up) Resets include $\overline{MCLR}$ Reset and Watchdog Timer Reset during normal operation.

2: MCLR and WDT Reset do not affect the previous value data latch. The RAIF bit will be cleared upon Reset but will set again if the mismatch exists.

TABLE 2-2: PIC12F635 SPECIAL FUNCTION REGISTERS SUMMARY BANK 1

Addr	Name	Bit 7	Bit 6	Bit 5	Bit 4	Bit 3	Bit 2	Bit 1	Bit 0	Value on POR/BOR/ WUR	Page
Bank 1											
80h	INDF	Addressing this location uses contents of FSR to address data memory (not a physical register)								xxxx xxxx	32,137
81h	OPTION_REG	$\overline{\text{RAPU}}$	INTEDG	T0CS	T0SE	PSA	PS2	PS1	PS0	1111 1111	63,137
82h	PCL	Program Counter's (PC) Least Significant Byte								0000 0000	32,137
83h	STATUS	IRP	RP1	RP0	$\overline{\text{TO}}$	$\overline{\text{PD}}$	Z	DC	C	0001 1xxx	26,137
84h	FSR	Indirect Data Memory Address Pointer								xxxx xxxx	32,137
85h	TRISIO	—	—	TRISIO5	TRISIO4	TRISIO3	TRISIO2	TRISIO1	TRISIO0	--11 1111	--11 1111
86h	—	Unimplemented								—	—
87h	—	Unimplemented								—	—
88h	—	Unimplemented								—	—
89h	—	Unimplemented								—	—
8Ah	PCLATH	—	—	—	Write Buffer for upper 5 bits of Program Counter					---0 0000	32,137
8Bh	INTCON	GIE	PEIE	T0IE	INTE	RAIE	T0IF	INTF	RAIF(3)	0000 000x	28,137
8Ch	PIE1	EEIE	LVDIE	CRIE	—	C1IE	OSFIE	—	TMR1IE	000- 00-0	29,137
8Dh	—	Unimplemented								—	—
8Eh	PCON	—	—	ULPWUE	SBOREN	$\overline{\text{WUR}}$	—	$\overline{\text{POR}}$	$\overline{\text{BOR}}$	--01 q-qq	31,137
8Fh	OSCCON	—	IRCF2	IRCF1	IRCF0	OSTS	HTS	LTS	SCS	-110 q000	36,137
90h	OSCTUNE	—	—	—	TUN4	TUN3	TUN2	TUN1	TUN0	---0 0000	40,137
91h	—	Unimplemented								—	—
92h	—	Unimplemented								—	—
93h	—	Unimplemented								—	—
94h	LVDCON	—	—	IRVST	LVDEN	—	LVDL2	LVDL1	LVDL0	--00 -000	--00 -000
95h	WPUDA(2)	—	—	WPUDA5	WPUDA4	—	WPUDA2	WPUDA1	WPUDA0	--11 -111	--11 -111
96h	IOCA	—	—	IOCA5	IOCA4	IOCA3	IOCA2	IOCA1	IOCA0	--00 0000	--00 0000
97h	WDA(2)	—	—	WDA5	WDA4	—	WDA2	WDA1	WDA0	--11 -111	--11 -111
9Bh	—	Unimplemented								—	—
99h	VRCON	VREN	—	VRR	—	VR3	VR2	VR1	VR0	0-0- 0000	0-0- 0000
9Ah	EEDAT	EEDAT7	EEDAT6	EEDAT5	EEDAT4	EEDAT3	EEDAT2	EEDAT1	EEDAT0	0000 0000	0000 0000
9Bh	EEADR	EEADR7	EEADR6	EEADR5	EEADR4	EEADR3	EEADR2	EEADR1	EEADR0	0000 0000	0000 0000
9Ch	EECON1	—	—	—	—	WRERR	WREN	WR	RD	---- x000	---- q000
9Dh	EECON2	EEPROM Control Register 2 (not a physical register)								---- ----	---- ----
9Eh	—	Unimplemented								—	—
9Fh	—	Unimplemented								—	—

Legend: – = Unimplemented locations read as '0', u = unchanged, x = unknown, q = value depends on condition, shaded = unimplemented

Note 1: Other (non Power-up) Resets include $\overline{\text{MCLR}}$ Reset and Watchdog Timer Reset during normal operation.

2: GP3 pull-up is enabled when pin is configured as $\overline{\text{MCLR}}$ in the Configuration Word register.

3: $\overline{\text{MCLR}}$ and WDT Reset do not affect the previous value data latch. The RAIF bit will be cleared upon Reset, but will set again if the mismatch exists.

© 2007 Microchip Technology Inc.

TABLE 2-3: PIC16F636/639 SPECIAL FUNCTION REGISTERS SUMMARY BANK 0

Addr	Name	Bit 7	Bit 6	Bit 5	Bit 4	Bit 3	Bit 2	Bit 1	Bit 0	Value on POR/BOR/ WUR	Page
Bank 0											
00h	INDF	Addressing this location uses contents of FSR to address data memory (not a physical register)								xxxx xxxx	32,137
01h	TMR0	Timer0 Module Register								xxxx xxxx	61,137
02h	PCL	Program Counter's (PC) Least Significant Byte								0000 0000	32,137
03h	STATUS	IRP	RP1	RP0	$\overline{TO}$	$\overline{PD}$	Z	DC	C	0001 1xxx	26,137
04h	FSR	Indirect Data Memory Address Pointer								xxxx xxxx	32,137
05h	PORTA	—	—	RA5	RA4	RA3	RA2	RA1	RA0	--xx xx00	48,137
06h	—	Unimplemented								—	—
07h	PORTC	—	—	RC5	RC4	RC3	RC2	RC1	RC0	--xx xx00	57,137
08h	—	Unimplemented								—	—
09h	—	Unimplemented								—	—
0Ah	PCLATH	—	—	—	Write Buffer for upper 5 bits of Program Counter					---0 0000	32,137
0Bh	INTCON	GIE	PEIE	T0IE	INTE	RAIE	T0IF	INTF	RAIF(2)	0000 000x	28,137
0Ch	PIR1	EEIF	LVDIF	CRIF	C2IF	C1IF	OSFIF	—	TMR1IF	0000 00-0	30,137
0Dh	—	Unimplemented								—	—
0Eh	TMR1L	Holding Register for the Least Significant Byte of the 16-bit TMR1								xxxx xxxx	64,137
0Fh	TMR1H	Holding Register for the Most Significant Byte of the 16-bit TMR1								xxxx xxxx	64,137
10h	T1CON	T1GINV	TMR1GE	T1CKPS1	T1CKPS0	T1OSCEN	$\overline{T1SYNC}$	TMR1CS	TMR1ON	0000 0000	68,137
11h	—	Unimplemented								—	—
12h	—	Unimplemented								—	—
13h	—	Unimplemented								—	—
14h	—	Unimplemented								—	—
15h	—	Unimplemented								—	—
16h	—	Unimplemented								—	—
17h	—	Unimplemented								—	—
18h	WDTCON	—	—	—	WDTPS3	WDTPS2	WDTPS1	WDTPS0	SWDTEN	---0 1000	144,137
19h	CMCON0	C2OUT	C1OUT	C2INV	C1INV	CIS	CM2	CM1	CM0	0000 0000	79,137
1Ah	CMCON1	—	—	—	—	—	—	T1GSS	C2SYNC	---- --10	82,137
1Bh	—	Unimplemented								—	—
1Ch	—	Unimplemented								—	—
1Dh	—	Unimplemented								—	—
1Eh	—	Unimplemented								—	—
1Fh	—	Unimplemented								—	—

Legend: – = Unimplemented locations read as '0', u = unchanged, x = unknown, q = value depends on condition, shaded = unimplemented

Note 1: Other (non Power-up) Resets include $\overline{MCLR}$ Reset and Watchdog Timer Reset during normal operation.

2: $\overline{MCLR}$ and WDT Reset do not affect the previous value data latch. The RAIF bit will be cleared upon Reset but will set again if the mismatch exists.

TABLE 2-4: PIC16F636/639 SPECIAL FUNCTION REGISTERS SUMMARY BANK 1

Addr	Name	Bit 7	Bit 6	Bit 5	Bit 4	Bit 3	Bit 2	Bit 1	Bit 0	Value on POR/BOR/ WUR	Page
Bank 1											
80h	INDF	Addressing this location uses contents of FSR to address data memory (not a physical register)								xxxx xxxx	32,137
81h	OPTION_REG	$\overline{\text{RAPU}}$	INTEDG	T0CS	T0SE	PSA	PS2	PS1	PS0	1111 1111	63,137
82h	PCL	Program Counter's (PC) Least Significant Byte								0000 0000	32,137
83h	STATUS	IRP	RP1	RP0	$\overline{\text{TO}}$	$\overline{\text{PD}}$	Z	DC	C	0001 1xxx	26,137
84h	FSR	Indirect Data Memory Address Pointer								xxxx xxxx	32,137
85h	TRISA	—	—	TRISA5	TRISA4	TRISA3	TRISA2	TRISA1	TRISA0	--11 1111	--11 1111
86h	—	Unimplemented								—	—
87h	TRISC	—	—	TRISC5	TRISC4	TRISC3	TRISC2	TRISC1	TRISC0	--11 1111	--11 1111
88h	—	Unimplemented								—	—
89h	—	Unimplemented								—	—
8Ah	PCLATH	—	—	—	Write Buffer for upper 5 bits of Program Counter					---0 0000	32,137
8Bh	INTCON	GIE	PEIE	T0IE	INTE	RAIE	T0IF	INTF	RAIF(3)	0000 000x	28,137
8Ch	PIE1	EEIE	LVDIE	CRIE	C2IE	C1IE	OSFIE	—	TMR1IE	0000 00-0	29,137
8Dh	—	Unimplemented								—	—
8Eh	PCON	—	—	ULPWUE	SBOREN	$\overline{\text{WUR}}$	—	$\overline{\text{POR}}$	$\overline{\text{BOR}}$	--01 q-qq	--0u u-uu
8Fh	OSCCON	—	IRCF2	IRCF1	IRCF0	OSTS	HTS	LTS	SCS	-110 q000	-110 x000
90h	OSCTUNE	—	—	—	TUN4	TUN3	TUN2	TUN1	TUN0	---0 0000	---u uuuu
91h	—	Unimplemented								—	—
92h	—	Unimplemented								—	—
93h	—	Unimplemented								—	—
94h	LVDCON	—	—	IRVST	LVDEN	—	LVDL2	LVDL1	LVDL0	--00 -000	--00 -000
95h	WPUDA(2)	—	—	WPUDA5	WPUDA4	—	WPUDA2	WPUDA1	WPUDA0	--11 -111	--11 -111
96h	IOCA	—	—	IOCA5	IOCA4	IOCA3	IOCA2	IOCA1	IOCA0	--00 0000	--00 0000
97h	WDA(2)	—	—	WDA5	WDA4	—	WDA2	WDA1	WDA0	--11 -111	--11 -111
9Bh	—	Unimplemented								—	—
99h	VRCON	VREN	—	VRR	—	VR3	VR2	VR1	VR0	0-0- 0000	0-0- 0000
9Ah	EEDAT	EEDAT7	EEDAT6	EEDAT5	EEDAT4	EEDAT3	EEDAT2	EEDAT1	EEDAT0	0000 0000	0000 0000
9Bh	EEADR	EEADR7	EEADR6	EEADR5	EEADR4	EEADR3	EEADR2	EEADR1	EEADR0	0000 0000	0000 0000
9Ch	EECON1	—	—	—	—	WRERR	WREN	WR	RD	---- x000	---- q000
9Dh	EECON2	EEPROM Control Register 2 (not a physical register)								---- ----	---- ----
9Eh	—	Unimplemented								—	—
9Fh	—	Unimplemented								—	—

Legend: – = Unimplemented locations read as '0', u = unchanged, x = unknown, q = value depends on condition, shaded = unimplemented

Note 1: Other (non Power-up) Resets include $\overline{\text{MCLR}}$ Reset and Watchdog Timer Reset during normal operation.

2: RA3 pull-up is enabled when pin is configured as $\overline{\text{MCLR}}$ in the Configuration Word register.

3: $\overline{\text{MCLR}}$ and WDT Reset do not affect the previous value data latch. The RAIF bit will be cleared upon Reset but will set again if the mismatch exists.

© 2007 Microchip Technology Inc.

TABLE 2-5: PIC12F635/PIC16F636/639 SPECIAL FUNCTION REGISTERS SUMMARY BANK 2

Addr	Name	Bit 7	Bit 6	Bit 5	Bit 4	Bit 3	Bit 2	Bit 1	Bit 0	Value on POR/BOR/ WUR	Page
Bank 2											
10Ch	—	Unimplemented								—	—
10Dh	—	Unimplemented								—	—
10Eh	—	Unimplemented								—	—
10Fh	—	Unimplemented								—	—
110h	CRCON	GO/$\overline{\text{DONE}}$	ENC/$\overline{\text{DEC}}$	—	—	—	—	CRREG1	CRREG0	00-- --00	00-- --00
111h	CRDAT0(2)	Cryptographic Data Register 0								0000 0000	0000 0000
112h	CRDAT1(2)	Cryptographic Data Register 1								0000 0000	0000 0000
113h	CRDAT2(2)	Cryptographic Data Register 2								0000 0000	0000 0000
114h	CRDAT3(2)	Cryptographic Data Register 3								0000 0000	0000 0000
115h	—	Unimplemented								—	—
116h	—	Unimplemented								—	—

Legend: – = Unimplemented locations read as '0', u = unchanged, x = unknown, q = value depends on condition, shaded = unimplemented

Note 1: Other (non Power-up) Resets include $\overline{\text{MCLR}}$ Reset and Watchdog Timer Reset during normal operation.

2: CRDAT<3:0> registers are KEELOQ® hardware peripheral related registers and require the execution of the "KEELOQ Encoder License Agreement" regarding implementation of the module and access to related registers. The "KEELOQ Encoder License Agreement" may be accessed through the Microchip web site located at www.microchip.com/KEELOQ or by contacting your local Microchip Sales Representative.

2.2.2.1 STATUS Register

The STATUS register, shown in Register 2-1, contains:

- the arithmetic status of the ALU
- the Reset status
- the bank select bits for data memory (GPR and SFR)

The STATUS register can be the destination for any instruction, like any other register. If the STATUS register is the destination for an instruction that affects the Z, DC or C bits, then the write to these three bits is disabled. These bits are set or cleared according to the device logic. Furthermore, the $\overline{TO}$ and $\overline{PD}$ bits are not writable. Therefore, the result of an instruction with the STATUS register as destination may be different than intended.

For example, `CLRF STATUS`, will clear the upper three bits and set the Z bit. This leaves the STATUS register as '`000u u1uu`' (where `u` = unchanged).

It is recommended, therefore, that only `BCF`, `BSF`, `SWAPF` and `MOVWF` instructions are used to alter the STATUS register, because these instructions do not affect any Status bits. For other instructions not affecting any Status bits, see **Section 13.0 "Instruction Set Summary"**

> **Note 1:** The C and DC bits operate as a $\overline{Borrow}$ and $\overline{Digit\ Borrow}$ out bit, respectively, in subtraction.

REGISTER 2-1: STATUS: STATUS REGISTER

R/W-0	R/W-0	R/W-0	R-1	R-1	R/W-x	R/W-x	R/W-x
IRP	RP1	RP0	$\overline{TO}$	$\overline{PD}$	Z	DC(1)	C(1)
bit 7							bit 0

Legend:			
R = Readable bit	W = Writable bit	U = Unimplemented bit, read as '0'	
-n = Value at POR	'1' = Bit is set	'0' = Bit is cleared	x = Bit is unknown

bit 7 **IRP:** Register Bank Select bit (used for indirect addressing)
`1` = Bank 2, 3 (100h-1FFh)
`0` = Bank 0, 1 (00h-FFh)

bit 6-5 **RP<1:0>:** Register Bank Select bits (used for direct addressing)
`00` = Bank 0 (00h-7Fh)
`01` = Bank 1 (80h-FFh)
`10` = Bank 2 (100h-17Fh)
`11` = Bank 3 (180h-1FFh)

bit 4 **$\overline{TO}$:** Time-out bit
`1` = After power-up, `CLRWDT` instruction or `SLEEP` instruction
`0` = A WDT time-out occurred

bit 3 **$\overline{PD}$:** Power-down bit
`1` = After power-up or by the `CLRWDT` instruction
`0` = By execution of the `SLEEP` instruction

bit 2 **Z:** Zero bit
`1` = The result of an arithmetic or logic operation is zero
`0` = The result of an arithmetic or logic operation is not zero

bit 1 **DC:** Digit Carry/$\overline{Borrow}$ bit (`ADDWF`, `ADDLW`, `SUBLW`, `SUBWF` instructions)(1)
`1` = A carry-out from the 4th low-order bit of the result occurred
`0` = No carry-out from the 4th low-order bit of the result

bit 0 **C:** Carry/$\overline{Borrow}$ bit(1) (`ADDWF`, `ADDLW`, `SUBLW`, `SUBWF` instructions)(1)
`1` = A carry-out from the Most Significant bit of the result occurred
`0` = No carry-out from the Most Significant bit of the result occurred

Note 1: For $\overline{Borrow}$, the polarity is reversed. A subtraction is executed by adding the two's complement of the second operand. For rotate (`RRF`, `RLF`) instructions, this bit is loaded with either the high-order or low-order bit of the source register.

© 2007 Microchip Technology Inc.

2.2.2.2 OPTION Register

The OPTION register is a readable and writable register which contains various control bits to configure:

- TMR0/WDT prescaler
- External RA2/INT interrupt
- TMR0
- Weak pull-up/pull-downs on PORTA

> **Note:** To achieve a 1:1 prescaler assignment for Timer0, assign the prescaler to the WDT by setting the PSA bit of the OPTION register to '1'. See **Section 5.1.3 "Software Programmable Prescaler"**.

REGISTER 2-2: OPTION_REG: OPTION REGISTER

R/W-1	R/W-1	R/W-1	R/W-1	R/W-1	R/W-1	R/W-1	R/W-1
$\overline{\text{RAPU}}$	INTEDG	T0CS	T0SE	PSA	PS2	PS1	PS0
bit 7							bit 0

Legend:			
R = Readable bit	W = Writable bit	U = Unimplemented bit, read as '0'	
-n = Value at POR	'1' = Bit is set	'0' = Bit is cleared	x = Bit is unknown

bit 7 **$\overline{\text{RAPU}}$:** PORTA Pull-up Enable bit
1 = PORTA pull-ups are disabled
0 = PORTA pull-ups are enabled by individual PORT latch values

bit 6 **INTEDG:** Interrupt Edge Select bit
1 = Interrupt on rising edge of RA2/INT pin
0 = Interrupt on falling edge of RA2/INT pin

bit 5 **T0CS:** Timer0 Clock Source Select bit
1 = Transition on RA2/T0CKI pin
0 = Internal instruction cycle clock (FOSC/4)

bit 4 **T0SE:** Timer0 Source Edge Select bit
1 = Increment on high-to-low transition on RA2/T0CKI pin
0 = Increment on low-to-high transition on RA2/T0CKI pin

bit 3 **PSA:** Prescaler Assignment bit
1 = Prescaler is assigned to the WDT
0 = Prescaler is assigned to the Timer0 module

bit 2-0 **PS<2:0>:** Prescaler Rate Select bits

Bit Value	Timer0 Rate	WDT Rate
000	1 : 2	1 : 1
001	1 : 4	1 : 2
010	1 : 8	1 : 4
011	1 : 16	1 : 8
100	1 : 32	1 : 16
101	1 : 64	1 : 32
110	1 : 128	1 : 64
111	1 : 256	1 : 128

2.2.2.3 INTCON Register

The INTCON register is a readable and writable register which contains the various enable and flag bits for TMR0 register overflow, PORTA change and external RA2/INT pin interrupts.

Note: Interrupt flag bits are set when an interrupt condition occurs, regardless of the state of its corresponding enable bit or the Global Interrupt Enable bit, GIE of the INTCON register. User software should ensure the appropriate interrupt flag bits are clear prior to enabling an interrupt.

REGISTER 2-3: INTCON: INTERRUPT CONTROL REGISTER

R/W-0	R/W-0	R/W-0	R/W-0	R/W-0	R/W-0	R/W-0	R/W-x
GIE	PEIE	T0IE	INTE	RAIE(1,3)	T0IF(2)	INTF	RAIF
bit 7							bit 0

Legend:			
R = Readable bit	W = Writable bit	U = Unimplemented bit, read as ‘0’	
-n = Value at POR	‘1’ = Bit is set	‘0’ = Bit is cleared	x = Bit is unknown

bit 7 **GIE:** Global Interrupt Enable bit
1 = Enables all unmasked interrupts
0 = Disables all interrupts

bit 6 **PEIE:** Peripheral Interrupt Enable bit
1 = Enables all unmasked peripheral interrupts
0 = Disables all peripheral interrupts

bit 5 **T0IE:** Timer0 Overflow Interrupt Enable bit
1 = Enables the Timer0 interrupt
0 = Disables the Timer0 interrupt

bit 4 **INTE:** RA2/INT External Interrupt Enable bit
1 = Enables the RA2/INT external interrupt
0 = Disables the RA2/INT external interrupt

bit 3 **RAIE:** PORTA Change Interrupt Enable bit(1,3)
1 = Enables the PORTA change interrupt
0 = Disables the PORTA change interrupt

bit 2 **T0IF:** Timer0 Overflow Interrupt Flag bit(2)
1 = TMR0 register has overflowed (must be cleared in software)
0 = TMR0 register did not overflow

bit 1 **INTF:** RA2/INT External Interrupt Flag bit
1 = The RA2/INT external interrupt occurred (must be cleared in software)
0 = The RA2/INT external interrupt did not occur

bit 0 **RAIF:** PORTA Change Interrupt Flag bit
1 = When at least one of the PORTA general purpose I/O pins changed state (must be cleared in software)
0 = None of the PORTA general purpose I/O pins have changed state

Note 1: IOCA register must also be enabled.
2: T0IF bit is set when Timer0 rolls over. Timer0 is unchanged on Reset and should be initialized before clearing T0IF bit.
3: Includes ULPWU interrupt.

© 2007 Microchip Technology Inc.

2.2.2.4 PIE1 Register

The PIE1 register contains the interrupt enable bits, as shown in Register 2-4.

Note: Bit PEIE of the INTCON register must be set to enable any peripheral interrupt.

REGISTER 2-4: PIE1: PERIPHERAL INTERRUPT ENABLE REGISTER 1

R/W-0	R/W-0	R/W-0	R/W-0	R/W-0	R/W-0	U-0	R/W-0
EEIE	LVDIE	CRIE	C2IE(1)	C1IE	OSFIE	—	TMR1IE
bit 7							bit 0

Legend:			
R = Readable bit	W = Writable bit	U = Unimplemented bit, read as ‘0’	
-n = Value at POR	‘1’ = Bit is set	‘0’ = Bit is cleared	x = Bit is unknown

bit 7 **EEIE**: EE Write Complete Interrupt Enable bit
1 = Enables the EE write complete interrupt
0 = Disables the EE write complete interrupt

bit 6 **LVDIE**: Low-Voltage Detect Interrupt Enable bit
1 = Enables the LVD interrupt
0 = Disables the LVD interrupt

bit 5 **CRIE**: Cryptographic Interrupt Enable bit
1 = Enables the cryptographic interrupt
0 = Disables the cryptographic interrupt

bit 4 **C2IE**: Comparator 2 Interrupt Enable bit(1)
1 = Enables the Comparator 2 interrupt
0 = Disables the Comparator 2 interrupt

bit 3 **C1IE**: Comparator 1 Interrupt Enable bit
1 = Enables the Comparator 1 interrupt
0 = Disables the Comparator 1 interrupt

bit 2 **OSFIE**: Oscillator Fail Interrupt Enable bit
1 = Enables the oscillator fail interrupt
0 = Disables the oscillator fail interrupt

bit 1 **Unimplemented**: Read as ‘0’

bit 0 **TMR1IE:** Timer1 Overflow Interrupt Enable bit
1 = Enables the Timer1 overflow interrupt
0 = Disables the Timer1 overflow interrupt

Note 1: PIC16F636/639 only.

2.2.2.5 PIR1 Register

The PIR1 register contains the interrupt flag bits, as shown in Register 2-5.

Note:	Interrupt flag bits are set when an interrupt condition occurs, regardless of the state of its corresponding enable bit or the Global Interrupt Enable bit, GIE of the INTCON register. User software should ensure the appropriate interrupt flag bits are clear prior to enabling an interrupt.

REGISTER 2-5: PIR1: PERIPHERAL INTERRUPT REQUEST REGISTER 1

R/W-0	R/W-0	R/W-0	R/W-0	R/W-0	R/W-0	U-0	R/W-0
EEIF	LVDIF	CRIF	C2IF(1)	C1IF	OSFIF	—	TMR1IF
bit 7							bit 0

Legend:			
R = Readable bit	W = Writable bit	U = Unimplemented bit, read as ‘0’	
-n = Value at POR	‘1’ = Bit is set	‘0’ = Bit is cleared	x = Bit is unknown

bit 7 **EEIF**: EE Write Complete Interrupt Flag bit
1 = The write operation completed (must be cleared in software)
0 = The write operation has not completed or has not been started

bit 6 **LVDIF**: Low-Voltage Detect Interrupt Flag bit
1 = The supply voltage has crossed selected LVD voltage (must be cleared in software)
0 = The supply voltage has not crossed selected LVD voltage

bit 5 **CRIF**: Cryptographic Interrupt Flag bit
1 = The Cryptographic module has completed an operation (must be cleared in software)
0 = The Cryptographic module has not completed an operation or is Idle

bit 4 **C2IF**: Comparator 2 Interrupt Flag bit(1)
1 = Comparator output (C2OUT bit) has changed (must be cleared in software)
0 = Comparator output (C2OUT bit) has not changed

bit 3 **C1IF**: Comparator 1 Interrupt Flag bit
1 = Comparator output (C1OUT bit) has changed (must be cleared in software)
0 = Comparator output (C1OUT bit) has not changed

bit 2 **OSFIF**: Oscillator Fail Interrupt Flag bit
1 = System oscillator failed, clock input has changed INTOSC (must be cleared in software)
0 = System clock operating

bit 1 **Unimplemented**: Read as ‘0’

bit 0 **TMR1IF:** Timer1 Overflow Interrupt Flag bit
1 = Timer1 rolled over (must be cleared in software)
0 = Timer1 has not rolled over

Note 1: PIC16F636/639 only.

© 2007 Microchip Technology Inc.

2.2.2.6 PCON Register

The Power Control (PCON) register (see Table 12-3) contains flag bits to differentiate between a:

- Power-on Reset ($\overline{\text{POR}}$)
- Wake-up Reset ($\overline{\text{WUR}}$)
- Brown-out Reset ($\overline{\text{BOR}}$)
- Watchdog Timer Reset (WDT)
- External $\overline{\text{MCLR}}$ Reset

The PCON register also controls the Ultra Low-Power Wake-up and software enable of the $\overline{\text{BOR}}$.

The PCON register bits are shown in Register 2-6.

REGISTER 2-6: PCON: POWER CONTROL REGISTER

U-0	U-0	R/W-0	R/W-1	R/W-x	U-0	R/W-0	R/W-x
—	—	ULPWUE	SBOREN(1)	$\overline{\text{WUR}}$	—	$\overline{\text{POR}}$	$\overline{\text{BOR}}$
bit 7							bit 0

Legend:			
R = Readable bit	W = Writable bit	U = Unimplemented bit, read as ‘0’	
-n = Value at POR	‘1’ = Bit is set	‘0’ = Bit is cleared	x = Bit is unknown

bit 7-6 **Unimplemented:** Read as ‘0’

bit 5 **ULPWUE:** Ultra Low-Power Wake-up Enable bit
1 = Ultra low-power wake-up enabled
0 = Ultra low-power wake-up disabled

bit 4 **SBOREN:** Software BOR Enable bit(1)
1 = BOR enabled
0 = BOR disabled

bit 3 **$\overline{\text{WUR}}$**: Wake-up Reset Status bit
1 = No Wake-up Reset occurred
0 = A Wake-up Reset occurred (must be set in software after a Power-on Reset occurs)

bit 2 **Unimplemented:** Read as ‘0’

bit 1 **$\overline{\text{POR}}$:** Power-on Reset Status bit
1 = No Power-on Reset occurred
0 = A Power-on Reset occurred (must be set in software after a Power-on Reset occurs)

bit 0 **$\overline{\text{BOR}}$:** Brown-out Reset Status bit
1 = No Brown-out Reset occurred
0 = A Brown-out Reset occurred (must be set in software after a Brown-out Reset occurs)

Note 1: BOREN<1:0> = 01 in the Configuration Word register for this bit to control the $\overline{\text{BOR}}$.

2.3 PCL and PCLATH

The Program Counter (PC) is 13 bits wide. The low byte comes from the PCL register, which is a readable and writable register. The high byte (PC<12:8>) is not directly readable or writable and comes from PCLATH. On any Reset, the PC is cleared. Figure 2-5 shows the two situations for the loading of the PC. The upper example in Figure 2-5 shows how the PC is loaded on a write to PCL (PCLATH<4:0> → PCH). The lower example in Figure 2-5 shows how the PC is loaded during a `CALL` or `GOTO` instruction (PCLATH<4:3> → PCH).

FIGURE 2-5: LOADING OF PC IN DIFFERENT SITUATIONS

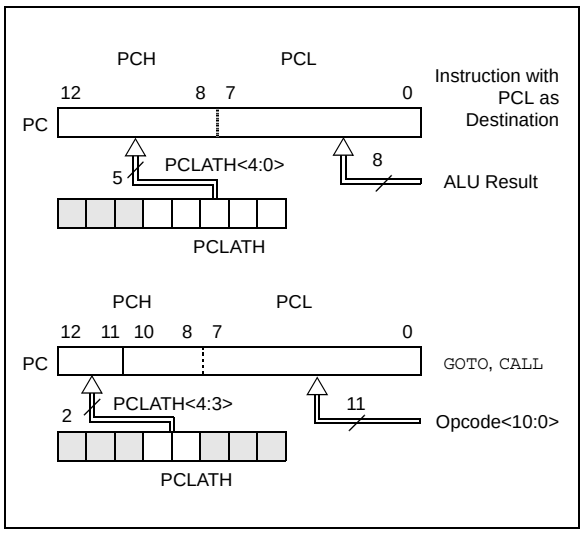

2.3.1 MODIFYING PCL

Executing any instruction with the PCL register as the destination simultaneously causes the Program Counter PC<12:8> bits (PCH) to be replaced by the contents of the PCLATH register. This allows the entire contents of the program counter to be changed by writing the desired upper 5 bits to the PCLATH register. When the lower 8 bits are written to the PCL register, all 13 bits of the program counter will change to the values contained in the PCLATH register and those being written to the PCL register.

A computed `GOTO` is accomplished by adding an offset to the program counter (`ADDWF PCL`). Care should be exercised when jumping into a look-up table or program branch table (computed `GOTO`) by modifying the PCL register. Assuming that PCLATH is set to the table start address, if the table length is greater than 255 instructions or if the lower 8 bits of the memory address rolls over from 0xFF to 0x00 in the middle of the table, then PCLATH must be incremented for each address rollover that occurs between the table beginning and the target location within the table.

For more information refer to Application Note AN556, "*Implementing a Table Read*" (DS00556).

2.3.2 STACK

The PIC12F635/PIC16F636/639 family has an 8-level x 13-bit wide hardware stack (see Figure 2-1). The stack space is not part of either program or data space and the Stack Pointer is not readable or writable. The PC is PUSHed onto the stack when a `CALL` instruction is executed or an interrupt causes a branch. The stack is POPed in the event of a `RETURN`, `RETLW` or a `RETFIE` instruction execution. PCLATH is not affected by a PUSH or POP operation.

The stack operates as a circular buffer. This means that after the stack has been PUSHed eight times, the ninth push overwrites the value that was stored from the first push. The tenth push overwrites the second push (and so on).

Note 1: There are no Status bits to indicate stack overflow or stack underflow conditions.

2: There are no instructions/mnemonics called PUSH or POP. These are actions that occur from the execution of the `CALL`, `RETURN`, `RETLW` and `RETFIE` instructions or the vectoring to an interrupt address.

2.4 Indirect Addressing, INDF and FSR Registers

The INDF register is not a physical register. Addressing the INDF register will cause indirect addressing.

Indirect addressing is possible by using the INDF register. Any instruction using the INDF register actually accesses data pointed to by the File Select Register (FSR). Reading INDF itself indirectly will produce 00h. Writing to the INDF register indirectly results in a no operation (although Status bits may be affected). An effective 9-bit address is obtained by concatenating the 8-bit FSR and the IRP bit of the STATUS register, as shown in Figure 2-6.

A simple program to clear RAM location 20h-2Fh using indirect addressing is shown in Example 2-1.

EXAMPLE 2-1: INDIRECT ADDRESSING

```
        MOVLW   0x20    ;initialize pointer
        MOVWF   FSR     ;to RAM
NEXT    CLRF    INDF    ;clear INDF register
        INCF    FSR     ;INC POINTER
        BTFSS   FSR,4   ;all done?
        GOTO    NEXT    ;no clear next
CONTINUE                ;yes continue
```


© 2007 Microchip Technology Inc.

FIGURE 2-6: DIRECT/INDIRECT ADDRESSING PIC12F635/PIC16F636/639

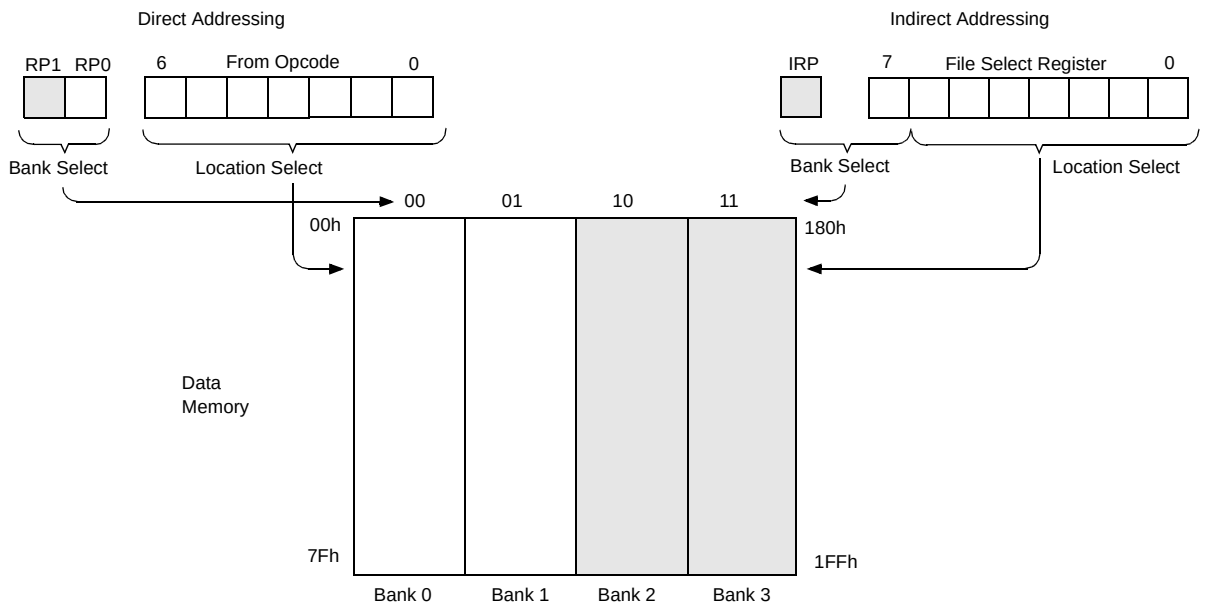

Note: For memory map detail, see Figure 2-2.

NOTES:

© 2007 Microchip Technology Inc.

3.0 OSCILLATOR MODULE (WITH FAIL-SAFE CLOCK MONITOR)

3.1 Overview

The Oscillator module has a wide variety of clock sources and selection features that allow it to be used in a wide range of applications while maximizing performance and minimizing power consumption. Figure 3-1 illustrates a block diagram of the Oscillator module.

Clock sources can be configured from external oscillators, quartz crystal resonators, ceramic resonators and Resistor-Capacitor (RC) circuits. In addition, the system clock source can be configured from one of two internal oscillators, with a choice of speeds selectable via software. Additional clock features include:

- Selectable system clock source between external or internal via software.
- Two-Speed Start-up mode, which minimizes latency between external oscillator start-up and code execution.
- Fail-Safe Clock Monitor (FSCM) designed to detect a failure of the external clock source (LP, XT, HS, EC or RC modes) and switch automatically to the internal oscillator.

The Oscillator module can be configured in one of eight clock modes.

1. EC – External clock with I/O on OSC2/CLKOUT.
2. LP – 32 kHz Low-Power Crystal mode.
3. XT – Medium Gain Crystal or Ceramic Resonator Oscillator mode.
4. HS – High Gain Crystal or Ceramic Resonator mode.
5. RC – External Resistor-Capacitor (RC) with FOSC/4 output on OSC2/CLKOUT.
6. RCIO – External Resistor-Capacitor (RC) with I/O on OSC2/CLKOUT.
7. INTOSC – Internal oscillator with FOSC/4 output on OSC2 and I/O on OSC1/CLKIN.
8. INTOSCIO – Internal oscillator with I/O on OSC1/CLKIN and OSC2/CLKOUT.

Clock Source modes are configured by the FOSC<2:0> bits in the Configuration Word register (CONFIG). The internal clock can be generated from two internal oscillators. The HFINTOSC is a calibrated high-frequency oscillator. The LFINTOSC is an uncalibrated low-frequency oscillator.

FIGURE 3-1: PIC® MCU CLOCK SOURCE BLOCK DIAGRAM

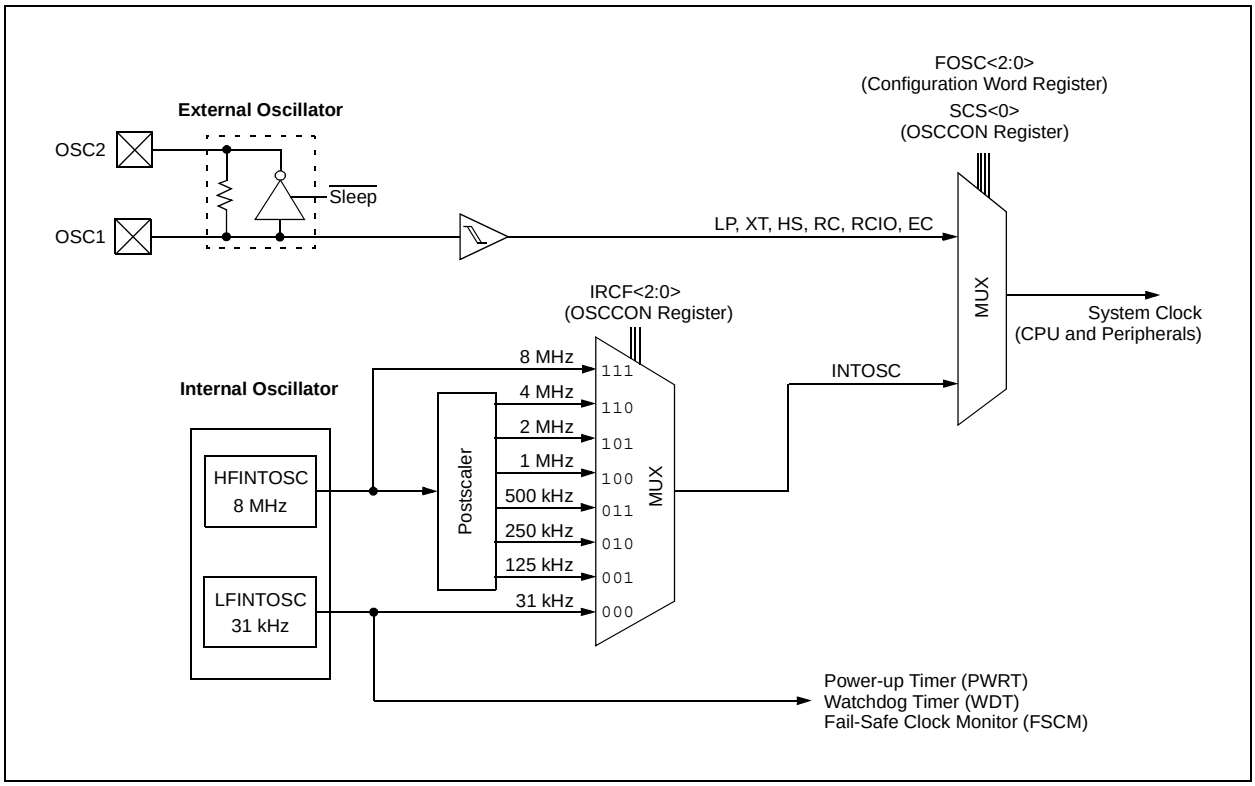

3.2 Oscillator Control

The Oscillator Control (OSCCON) register (Figure 3-1) controls the system clock and frequency selection options. The OSCCON register contains the following bits:

- Frequency selection bits (IRCF)
- Frequency Status bits (HTS, LTS)
- System clock control bits (OSTS, SCS)

REGISTER 3-1: OSCCON: OSCILLATOR CONTROL REGISTER

U-0	R/W-1	R/W-1	R/W-0	R-1	R-0	R-0	R/W-0
—	IRCF2	IRCF1	IRCF0	OSTS(1)	HTS	LTS	SCS
bit 7							bit 0

Legend:			
R = Readable bit	W = Writable bit	U = Unimplemented bit, read as ‘0’	
-n = Value at POR	‘1’ = Bit is set	‘0’ = Bit is cleared	x = Bit is unknown

bit 7 **Unimplemented:** Read as ‘0’

bit 6-4 **IRCF<2:0>:** Internal Oscillator Frequency Select bits
- 111 = 8 MHz
- 110 = 4 MHz (default)
- 101 = 2 MHz
- 100 = 1 MHz
- 011 = 500 kHz
- 010 = 250 kHz
- 001 = 125 kHz
- 000 = 31 kHz (LFINTOSC)

bit 3 **OSTS:** Oscillator Start-up Time-out Status bit(1)
- 1 = Device is running from the external clock defined by FOSC<2:0> of the Configuration Word
- 0 = Device is running from the internal oscillator (HFINTOSC or LFINTOSC)

bit 2 **HTS:** HFINTOSC Status bit (High Frequency – 8 MHz to 125 kHz)
- 1 = HFINTOSC is stable
- 0 = HFINTOSC is not stable

bit 1 **LTS:** LFINTOSC Stable bit (Low Frequency – 31 kHz)
- 1 = LFINTOSC is stable
- 0 = LFINTOSC is not stable

bit 0 **SCS:** System Clock Select bit
- 1 = Internal oscillator is used for system clock
- 0 = Clock source defined by FOSC<2:0> of the Configuration Word

Note 1: Bit resets to ‘0’ with Two-Speed Start-up and LP, XT or HS selected as the Oscillator mode or Fail-Safe mode is enabled.

© 2007 Microchip Technology Inc.

3.3 Clock Source Modes

Clock Source modes can be classified as external or internal.

- External Clock modes rely on external circuitry for the clock source. Examples are: Oscillator modules (EC mode), quartz crystal resonators or ceramic resonators (LP, XT and HS modes) and Resistor-Capacitor (RC) mode circuits.
- Internal clock sources are contained internally within the Oscillator module. The Oscillator module has two internal oscillators: the 8 MHz High-Frequency Internal Oscillator (HFINTOSC) and the 31 kHz Low-Frequency Internal Oscillator (LFINTOSC).

The system clock can be selected between external or internal clock sources via the System Clock Select (SCS) bit of the OSCCON register. See **Section 3.6 "Clock Switching"** for additional information.

3.4 External Clock Modes

3.4.1 OSCILLATOR START-UP TIMER (OST)

If the Oscillator module is configured for LP, XT or HS modes, the Oscillator Start-up Timer (OST) counts 1024 oscillations from OSC1. This occurs following a Power-on Reset (POR) and when the Power-up Timer (PWRT) has expired (if configured), or a wake-up from Sleep. During this time, the program counter does not increment and program execution is suspended. The OST ensures that the oscillator circuit, using a quartz crystal resonator or ceramic resonator, has started and is providing a stable system clock to the Oscillator module. When switching between clock sources, a delay is required to allow the new clock to stabilize. These oscillator delays are shown in Table 3-1.

In order to minimize latency between external oscillator start-up and code execution, the Two-Speed Clock Start-up mode can be selected (see **Section 3.7 "Two-Speed Clock Start-up Mode"**).

TABLE 3-1: OSCILLATOR DELAY EXAMPLES

Switch From	Switch To	Frequency	Oscillator Delay
Sleep/POR	LFINTOSC HFINTOSC	31 kHz 125 kHz to 8 MHz	Oscillator Warm-Up Delay (TWARM)
Sleep/POR	EC, RC	DC – 20 MHz	2 instruction cycles
LFINTOSC (31 kHz)	EC, RC	DC – 20 MHz	1 cycle of each
Sleep/POR	LP, XT, HS	32 kHz to 20 MHz	1024 Clock Cycles (OST)
LFINTOSC (31 kHz)	HFINTOSC	125 kHz to 8 MHz	1 µs (approx.)

3.4.2 EC MODE

The External Clock (EC) mode allows an externally generated logic level as the system clock source. When operating in this mode, an external clock source is connected to the OSC1 input and the OSC2 is available for general purpose I/O. Figure 3-2 shows the pin connections for EC mode.

The Oscillator Start-up Timer (OST) is disabled when EC mode is selected. Therefore, there is no delay in operation after a Power-on Reset (POR) or wake-up from Sleep. Because the PIC® MCU design is fully static, stopping the external clock input will have the effect of halting the device while leaving all data intact. Upon restarting the external clock, the device will resume operation as if no time had elapsed.

FIGURE 3-2: EXTERNAL CLOCK (EC) MODE OPERATION

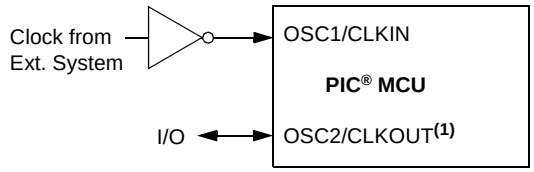

Note 1: Alternate pin functions are listed in the **Section 1.0 "Device Overview"**.

3.4.3 LP, XT, HS MODES

The LP, XT and HS modes support the use of quartz crystal resonators or ceramic resonators connected to OSC1 and OSC2 (Figure 3-3). The mode selects a low, medium or high gain setting of the internal inverter-amplifier to support various resonator types and speed.

LP Oscillator mode selects the lowest gain setting of the internal inverter-amplifier. LP mode current consumption is the least of the three modes. This mode is designed to drive only 32.768 kHz tuning-fork type crystals (watch crystals).

XT Oscillator mode selects the intermediate gain setting of the internal inverter-amplifier. XT mode current consumption is the medium of the three modes. This mode is best suited to drive resonators with a medium drive level specification.

HS Oscillator mode selects the highest gain setting of the internal inverter-amplifier. HS mode current consumption is the highest of the three modes. This mode is best suited for resonators that require a high drive setting.

Figure 3-3 and Figure 3-4 show typical circuits for quartz crystal and ceramic resonators, respectively.

FIGURE 3-3: QUARTZ CRYSTAL OPERATION (LP, XT OR HS MODE)

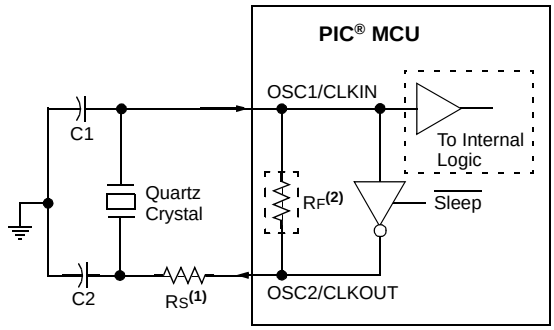

Note 1: A series resistor (R_S) may be required for quartz crystals with low drive level.

2: The value of R_F varies with the Oscillator mode selected (typically between 2 MΩ to 10 MΩ).

Note 1: Quartz crystal characteristics vary according to type, package and manufacturer. The user should consult the manufacturer data sheets for specifications and recommended application.

2: Always verify oscillator performance over the V_{DD} and temperature range that is expected for the application.

3: For oscillator design assistance, reference the following Microchip Applications Notes:

- AN826, "*Crystal Oscillator Basics and Crystal Selection for rfPIC® and PIC® Devices*" (DS00826)
- AN849, "*Basic PIC® Oscillator Design*" (DS00849)
- AN943, "*Practical PIC® Oscillator Analysis and Design*" (DS00943)
- AN949, "*Making Your Oscillator Work*" (DS00949)

FIGURE 3-4: CERAMIC RESONATOR OPERATION (XT OR HS MODE)

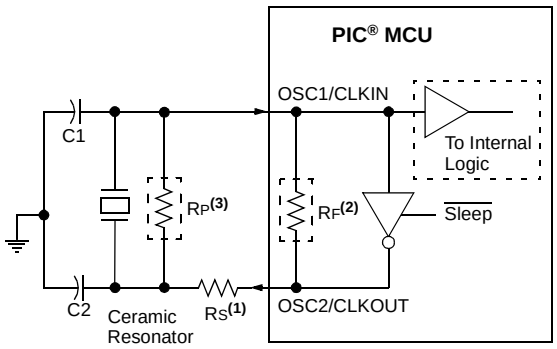

Note 1: A series resistor (R_S) may be required for ceramic resonators with low drive level.

2: The value of R_F varies with the Oscillator mode selected (typically between 2 MΩ to 10 MΩ).

3: An additional parallel feedback resistor (R_P) may be required for proper ceramic resonator operation.

© 2007 Microchip Technology Inc.

3.4.4 EXTERNAL RC MODES

The external Resistor-Capacitor (RC) modes support the use of an external RC circuit. This allows the designer maximum flexibility in frequency choice while keeping costs to a minimum when clock accuracy is not required. There are two modes: RC and RCIO.

In RC mode, the RC circuit connects to OSC1. OSC2/CLKOUT outputs the RC oscillator frequency divided by 4. This signal may be used to provide a clock for external circuitry, synchronization, calibration, test or other application requirements. Figure 3-5 shows the external RC mode connections.

FIGURE 3-5: EXTERNAL RC MODES

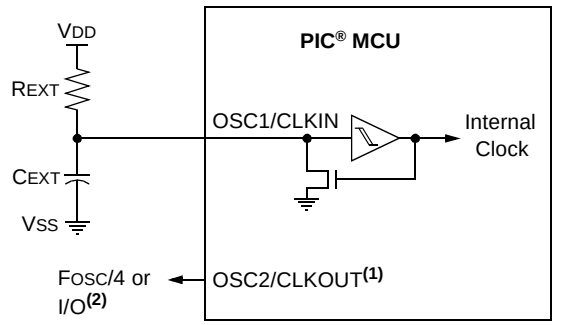

Recommended values: 10 kΩ ≤ REXT ≤ 100 kΩ, <3V
3 kΩ ≤ REXT ≤ 100 kΩ, 3-5V
CEXT > 20 pF, 2-5V

Note 1: Alternate pin functions are listed in the **Section 1.0 "Device Overview"**.
2: Output depends upon RC or RCIO clock mode.

In RCIO mode, the RC circuit is connected to OSC1. OSC2 becomes an additional general purpose I/O pin.

The RC oscillator frequency is a function of the supply voltage, the resistor (REXT) and capacitor (CEXT) values and the operating temperature. Other factors affecting the oscillator frequency are:

- threshold voltage variation
- component tolerances
- packaging variations in capacitance

The user also needs to take into account variation due to tolerance of external RC components used.

3.5 Internal Clock Modes

The Oscillator module has two independent, internal oscillators that can be configured or selected as the system clock source.

1. The **HFINTOSC** (High-Frequency Internal Oscillator) is factory calibrated and operates at 8 MHz. The frequency of the HFINTOSC can be user-adjusted via software using the OSCTUNE register (Register 3-2).
2. The **LFINTOSC** (Low-Frequency Internal Oscillator) is uncalibrated and operates at 31 kHz.

The system clock speed can be selected via software using the Internal Oscillator Frequency Select bits IRCF<2:0> of the OSCCON register.

The system clock can be selected between external or internal clock sources via the System Clock Selection (SCS) bit of the OSCCON register. See **Section 3.6 "Clock Switching"** for more information.

3.5.1 INTOSC AND INTOSCIO MODES

The INTOSC and INTOSCIO modes configure the internal oscillators as the system clock source when the device is programmed using the oscillator selection or the FOSC<2:0> bits in the Configuration Word register (CONFIG). See **Section 12.0 "Special Features of the CPU"** for more information.

In **INTOSC** mode, OSC1/CLKIN is available for general purpose I/O. OSC2/CLKOUT outputs the selected internal oscillator frequency divided by 4. The CLKOUT signal may be used to provide a clock for external circuitry, synchronization, calibration, test or other application requirements.

In **INTOSCIO** mode, OSC1/CLKIN and OSC2/CLKOUT are available for general purpose I/O.

3.5.2 HFINTOSC

The High-Frequency Internal Oscillator (HFINTOSC) is a factory calibrated 8 MHz internal clock source. The frequency of the HFINTOSC can be altered via software using the OSCTUNE register (Register 3-2).

The output of the HFINTOSC connects to a postscaler and multiplexer (see Figure 3-1). One of seven frequencies can be selected via software using the IRCF<2:0> bits of the OSCCON register. See **Section 3.5.4 "Frequency Select Bits (IRCF)"** for more information.

The HFINTOSC is enabled by selecting any frequency between 8 MHz and 125 kHz by setting the IRCF<2:0> bits of the OSCCON register ≠ `000`. Then, set the System Clock Source (SCS) bit of the OSCCON register to '`1`' or enable Two-Speed Start-up by setting the IESO bit in the Configuration Word register (CONFIG) to '`1`'.

The HF Internal Oscillator (HTS) bit of the OSCCON register indicates whether the HFINTOSC is stable or not.

3.5.2.1 OSCTUNE Register

The HFINTOSC is factory calibrated but can be adjusted in software by writing to the OSCTUNE register (Register 3-2).

The default value of the OSCTUNE register is '0'. The value is a 5-bit two's complement number.

When the OSCTUNE register is modified, the HFINTOSC frequency will begin shifting to the new frequency. Code execution continues during this shift. There is no indication that the shift has occurred.

OSCTUNE does not affect the LFINTOSC frequency. Operation of features that depend on the LFINTOSC clock source frequency, such as the Power-up Timer (PWRT), Watchdog Timer (WDT), Fail-Safe Clock Monitor (FSCM) and peripherals, are *not* affected by the change in frequency.

REGISTER 3-2: OSCTUNE: OSCILLATOR TUNING REGISTER

U-0	U-0	U-0	R/W-0	R/W-0	R/W-0	R/W-0	R/W-0
—	—	—	TUN4	TUN3	TUN2	TUN1	TUN0
bit 7							bit 0

Legend:			
R = Readable bit	W = Writable bit	U = Unimplemented bit, read as '0'	
-n = Value at POR	'1' = Bit is set	'0' = Bit is cleared	x = Bit is unknown

bit 7-5 **Unimplemented:** Read as '0'

bit 4-0 **TUN<4:0>:** Frequency Tuning bits

01111 = Maximum frequency
01110 =
•
•
•
00001 =
00000 = Oscillator module is running at the calibrated frequency.
11111 =
•
•
•
10000 = Minimum frequency

© 2007 Microchip Technology Inc.

3.5.3 LFINTOSC

The Low-Frequency Internal Oscillator (LFINTOSC) is an uncalibrated 31 kHz internal clock source.

The output of the LFINTOSC connects to a postscaler and multiplexer (see Figure 3-1). Select 31 kHz, via software, using the IRCF<2:0> bits of the OSCCON register. See **Section 3.5.4 "Frequency Select Bits (IRCF)"** for more information. The LFINTOSC is also the frequency for the Power-up Timer (PWRT), Watchdog Timer (WDT) and Fail-Safe Clock Monitor (FSCM).

The LFINTOSC is enabled by selecting 31 kHz (IRCF<2:0> bits of the OSCCON register = `000`) as the system clock source (SCS bit of the OSCCON register = `1`), or when any of the following are enabled:

- Two-Speed Start-up IESO bit of the Configuration Word register = `1` and IRCF<2:0> bits of the OSCCON register = `000`
- Power-up Timer (PWRT)
- Watchdog Timer (WDT)
- Fail-Safe Clock Monitor (FSCM)

The LF Internal Oscillator (LTS) bit of the OSCCON register indicates whether the LFINTOSC is stable or not.

3.5.4 FREQUENCY SELECT BITS (IRCF)

The output of the 8 MHz HFINTOSC and 31 kHz LFINTOSC connects to a postscaler and multiplexer (see Figure 3-1). The Internal Oscillator Frequency Select bits IRCF<2:0> of the OSCCON register select the frequency output of the internal oscillators. One of eight frequencies can be selected via software:

- 8 MHz
- 4 MHz (Default after Reset)
- 2 MHz
- 1 MHz
- 500 kHz
- 250 kHz
- 125 kHz
- 31 kHz (LFINTOSC)

Note:	Following any Reset, the IRCF<2:0> bits of the OSCCON register are set to '`110`' and the frequency selection is set to 4 MHz. The user can modify the IRCF bits to select a different frequency.

3.5.5 HF AND LF INTOSC CLOCK SWITCH TIMING

When switching between the LFINTOSC and the HFINTOSC, the new oscillator may already be shut down to save power (see Figure 3-6). If this is the case, there is a delay after the IRCF<2:0> bits of the OSCCON register are modified before the frequency selection takes place. The LTS and HTS bits of the OSCCON register will reflect the current active status of the LFINTOSC and HFINTOSC oscillators. The timing of a frequency selection is as follows:

1. IRCF<2:0> bits of the OSCCON register are modified.
2. If the new clock is shut down, a clock start-up delay is started.
3. Clock switch circuitry waits for a falling edge of the current clock.
4. CLKOUT is held low and the clock switch circuitry waits for a rising edge in the new clock.
5. CLKOUT is now connected with the new clock. LTS and HTS bits of the OSCCON register are updated as required.
6. Clock switch is complete.

See Figure 3-1 for more details.

If the internal oscillator speed selected is between 8 MHz and 125 kHz, there is no start-up delay before the new frequency is selected. This is because the old and new frequencies are derived from the HFINTOSC via the postscaler and multiplexer.

Start-up delay specifications are located in the A/C Specifications (Oscillator Module) in **Section 15.0 "Electrical Specifications"**.

FIGURE 3-6: INTERNAL OSCILLATOR SWITCH TIMING

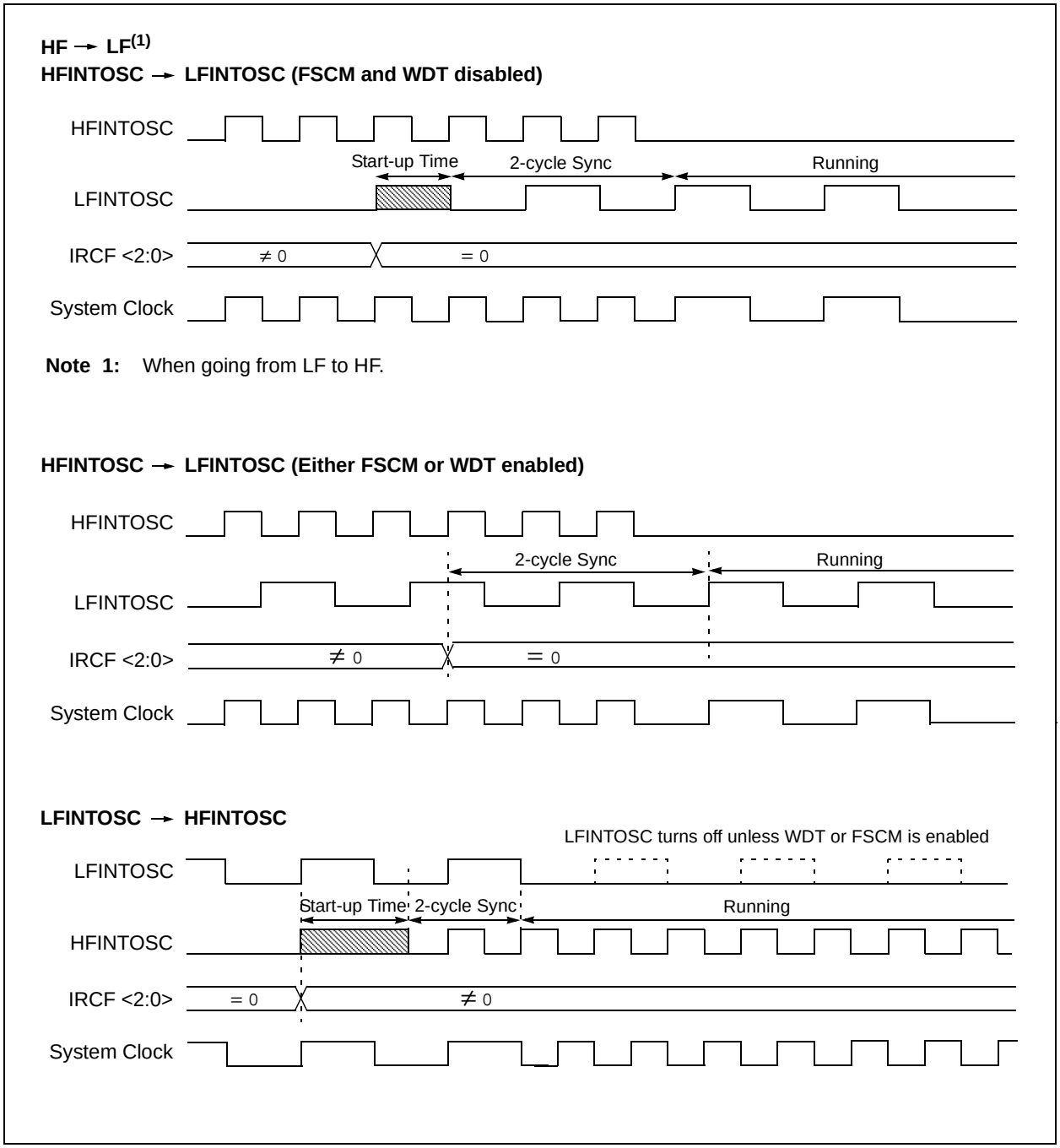

© 2007 Microchip Technology Inc.

3.6 Clock Switching

The system clock source can be switched between external and internal clock sources via software using the System Clock Select (SCS) bit of the OSCCON register.

3.6.1 SYSTEM CLOCK SELECT (SCS) BIT

The System Clock Select (SCS) bit of the OSCCON register selects the system clock source that is used for the CPU and peripherals.

- When the SCS bit of the OSCCON register = `0`, the system clock source is determined by configuration of the FOSC<2:0> bits in the Configuration Word register (CONFIG).
- When the SCS bit of the OSCCON register = `1`, the system clock source is chosen by the internal oscillator frequency selected by the IRCF<2:0> bits of the OSCCON register. After a Reset, the SCS bit of the OSCCON register is always cleared.

Note:	Any automatic clock switch, which may occur from Two-Speed Start-up or Fail-Safe Clock Monitor, does not update the SCS bit of the OSCCON register. The user can monitor the OSTS bit of the OSCCON register to determine the current system clock source.

3.6.2 OSCILLATOR START-UP TIME-OUT STATUS (OSTS) BIT

The Oscillator Start-up Time-out Status (OSTS) bit of the OSCCON register indicates whether the system clock is running from the external clock source, as defined by the FOSC<2:0> bits in the Configuration Word register (CONFIG), or from the internal clock source. In particular, OSTS indicates that the Oscillator Start-up Timer (OST) has timed out for LP, XT or HS modes.

3.7 Two-Speed Clock Start-up Mode

Two-Speed Start-up mode provides additional power savings by minimizing the latency between external oscillator start-up and code execution. In applications that make heavy use of the Sleep mode, Two-Speed Start-up will remove the external oscillator start-up time from the time spent awake and can reduce the overall power consumption of the device.

This mode allows the application to wake-up from Sleep, perform a few instructions using the INTOSC as the clock source and go back to Sleep without waiting for the primary oscillator to become stable.

Note:	Executing a `SLEEP` instruction will abort the oscillator start-up time and will cause the OSTS bit of the OSCCON register to remain clear.

When the Oscillator module is configured for LP, XT or HS modes, the Oscillator Start-up Timer (OST) is enabled (see **Section 3.4.1 “Oscillator Start-up Timer (OST)”**). The OST will suspend program execution until 1024 oscillations are counted. Two-Speed Start-up mode minimizes the delay in code execution by operating from the internal oscillator as the OST is counting. When the OST count reaches 1024 and the OSTS bit of the OSCCON register is set, program execution switches to the external oscillator.

3.7.1 TWO-SPEED START-UP MODE CONFIGURATION

Two-Speed Start-up mode is configured by the following settings:

- IESO (of the Configuration Word register) = `1`; Internal/External Switchover bit (Two-Speed Start-up mode enabled).
- SCS (of the OSCCON register) = `0`.
- FOSC<2:0> bits in the Configuration Word register (CONFIG) configured for LP, XT or HS mode.

Two-Speed Start-up mode is entered after:

- Power-on Reset (POR) and, if enabled, after Power-up Timer (PWRT) has expired, or
- Wake-up from Sleep.

If the external clock oscillator is configured to be anything other than LP, XT or HS mode, then Two-Speed Start-up is disabled. This is because the external clock oscillator does not require any stabilization time after POR or an exit from Sleep.

3.7.2 TWO-SPEED START-UP SEQUENCE

1. Wake-up from Power-on Reset or Sleep.
2. Instructions begin execution by the internal oscillator at the frequency set in the IRCF<2:0> bits of the OSCCON register.
3. OST enabled to count 1024 clock cycles.
4. OST timed out, wait for falling edge of the internal oscillator.
5. OSTS is set.
6. System clock held low until the next falling edge of new clock (LP, XT or HS mode).
7. System clock is switched to external clock source.

3.7.3 CHECKING TWO-SPEED CLOCK STATUS

Checking the state of the OSTS bit of the OSCCON register will confirm if the microcontroller is running from the external clock source, as defined by the FOSC<2:0> bits in the Configuration Word register (CONFIG), or the internal oscillator.

FIGURE 3-7: TWO-SPEED START-UP

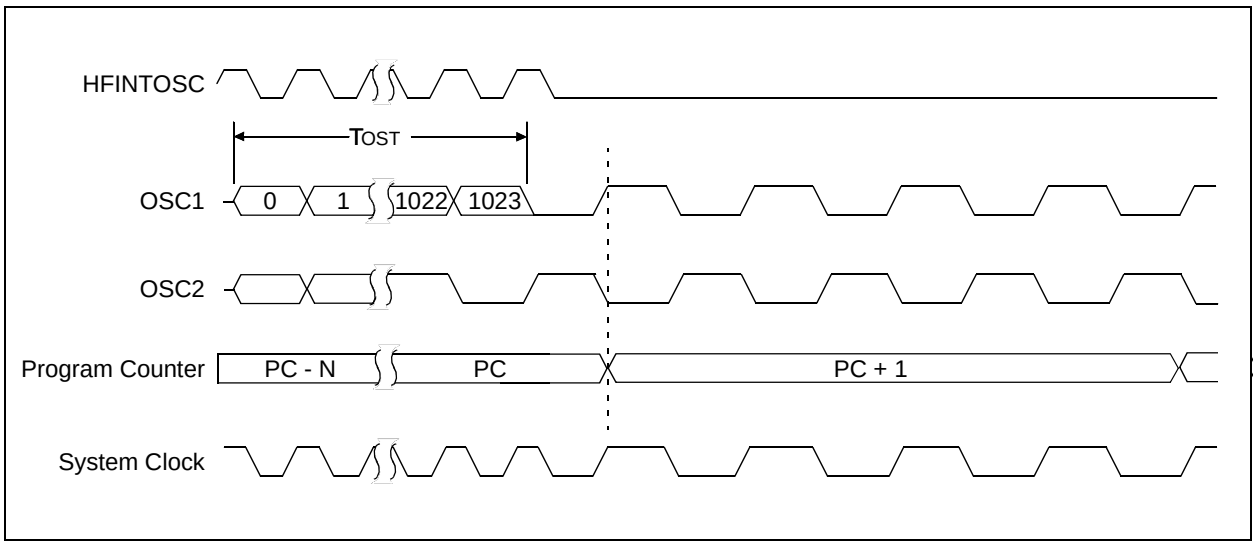

© 2007 Microchip Technology Inc.

3.8 Fail-Safe Clock Monitor

The Fail-Safe Clock Monitor (FSCM) allows the device to continue operating should the external oscillator fail. The FSCM can detect oscillator failure any time after the Oscillator Start-up Timer (OST) has expired. The FSCM is enabled by setting the FCMEN bit in the Configuration Word register (CONFIG). The FSCM is applicable to all external oscillator modes (LP, XT, HS, EC, RC and RCIO).

FIGURE 3-8: FSCM BLOCK DIAGRAM

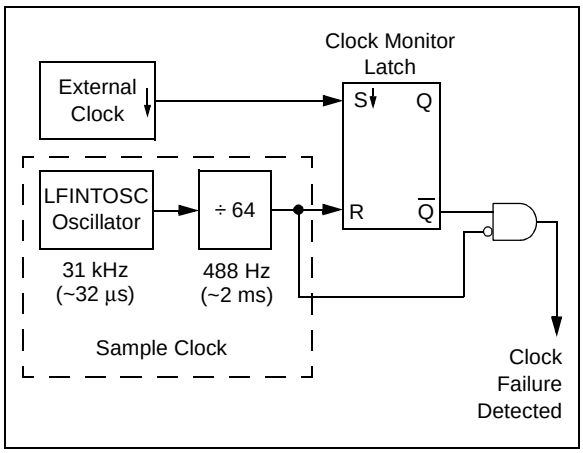

3.8.1 FAIL-SAFE DETECTION

The FSCM module detects a failed oscillator by comparing the external oscillator to the FSCM sample clock. The sample clock is generated by dividing the LFINTOSC by 64. See Figure 3-8. Inside the fail detector block is a latch. The external clock sets the latch on each falling edge of the external clock. The sample clock clears the latch on each rising edge of the sample clock. A failure is detected when an entire half-cycle of the sample clock elapses before the primary clock goes low.

3.8.2 FAIL-SAFE OPERATION

When the external clock fails, the FSCM switches the device clock to an internal clock source and sets the bit flag OSFIF of the PIR1 register. Setting this flag will generate an interrupt if the OSFIE bit of the PIE1 register is also set. The device firmware can then take steps to mitigate the problems that may arise from a failed clock. The system clock will continue to be sourced from the internal clock source until the device firmware successfully restarts the external oscillator and switches back to external operation.

The internal clock source chosen by the FSCM is determined by the IRCF<2:0> bits of the OSCCON register. This allows the internal oscillator to be configured before a failure occurs.

3.8.3 FAIL-SAFE CONDITION CLEARING

The Fail-Safe condition is cleared after a Reset, executing a `SLEEP` instruction or toggling the SCS bit of the OSCCON register. When the SCS bit is toggled, the OST is restarted. While the OST is running, the device continues to operate from the INTOSC selected in OSCCON. When the OST times out, the Fail-Safe condition is cleared and the device will be operating from the external clock source. The Fail-Safe condition must be cleared before the OSFIF flag can be cleared.

3.8.4 RESET OR WAKE-UP FROM SLEEP

The FSCM is designed to detect an oscillator failure after the Oscillator Start-up Timer (OST) has expired. The OST is used after waking up from Sleep and after any type of Reset. The OST is not used with the EC or RC Clock modes so that the FSCM will be active as soon as the Reset or wake-up has completed. When the FSCM is enabled, the Two-Speed Start-up is also enabled. Therefore, the device will always be executing code while the OST is operating.

Note:	Due to the wide range of oscillator start-up times, the Fail-Safe circuit is not active during oscillator start-up (i.e., after exiting Reset or Sleep). After an appropriate amount of time, the user should check the OSTS bit of the OSCCON register to verify the oscillator start-up and that the system clock switchover has successfully completed.

FIGURE 3-9: FSCM TIMING DIAGRAM

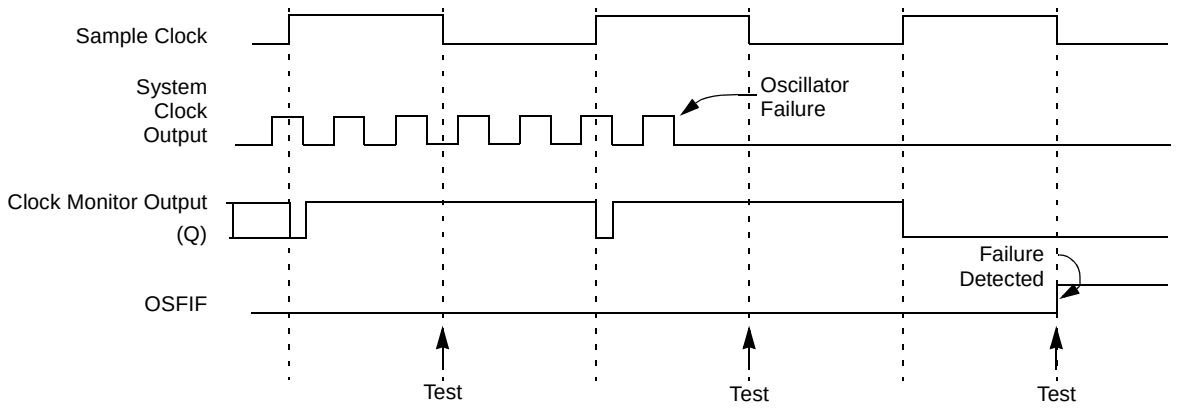

Note: The system clock is normally at a much higher frequency than the sample clock. The relative frequencies in this example have been chosen for clarity.

TABLE 3-2: SUMMARY OF REGISTERS ASSOCIATED WITH CLOCK SOURCES

Name	Bit 7	Bit 6	Bit 5	Bit 4	Bit 3	Bit 2	Bit 1	Bit 0	Value on POR, BOR	Value on all other Resets(1)
CONFIG(2)	$\overline{\text{CPD}}$	$\overline{\text{CP}}$	MCLRE	$\overline{\text{PWRTE}}$	WDTE	FOSC2	FOSC1	FOSC0	—	—
INTCON	GIE	PEIE	T0IE	INTE	RAIE	T0IF	INTF	RAIF	0000 000x	0000 000x
OSCCON	—	IRCF2	IRCF1	IRCF0	OSTS	HTS	LTS	SCS	-110 x000	-110 x000
OSCTUNE	—	—	—	TUN4	TUN3	TUN2	TUN1	TUN0	---0 0000	---u uuuu
PIE1	EEIE	LVDIE	CRIE	C2IE(3)	C1IE	OSFIE	—	TMR1IE	000- 00-0	000- 00-0
PIR1	EEIF	LVDIF	CRIF	C2IF(3)	C1IF	OSFIF	—	TMR1IF	000- 00-0	000- 00-0

Legend: x = unknown, u = unchanged, – = unimplemented locations read as '0'. Shaded cells are not used by oscillators.

Note 1: Other (non Power-up) Resets include $\overline{\text{MCLR}}$ Reset and Watchdog Timer Reset during normal operation.

2: See Configuration Word register (CONFIG) for operation of all register bits.

3: PIC16F636/639 only.

© 2007 Microchip Technology Inc.

4.0 I/O PORTS

There are as many as twelve general purpose I/O pins available. Depending on which peripherals are enabled, some or all of the pins may not be available as general purpose I/O. In general, when a peripheral is enabled, the associated pin may not be used as a general purpose I/O pin.

4.1 PORTA and the TRISA Registers

PORTA is a 6-bit wide, bidirectional port. The corresponding data direction register is TRISA (Register 4-2). Setting a TRISA bit (= 1) will make the corresponding PORTA pin an input (i.e., put the corresponding output driver in a High-Impedance mode). Clearing a TRISA bit (= 0) will make the corresponding PORTA pin an output (i.e., put the contents of the output latch on the selected pin). The exception is RA3, which is input only and its TRIS bit will always read as '1'. Example 4-1 shows how to initialize PORTA.

Note:	PORTA = GPIO TRISA = TRISIO

Reading the PORTA register (Register 4-1) reads the status of the pins, whereas writing to it will write to the PORT latch. All write operations are read-modify-write operations. Therefore, a write to a port implies that the port pins are read, this value is modified and then written to the PORT data latch. RA3 reads '0' when MCLRE = 1.

The TRISA register controls the direction of the PORTA pins, even when they are being used as analog inputs. The user must ensure the bits in the TRISA register are maintained set when using them as analog inputs. I/O pins configured as analog inputs always read '0'.

Note:	The CMCON0 register must be initialized to configure an analog channel as a digital input. Pins configured as analog inputs will read '0'.

EXAMPLE 4-1: INITIALIZING PORTA

```
BANKSEL PORTA          ;
CLRF    PORTA          ;Init PORTA
MOVLW   07h            ;Set RA<2:0> to
MOVWF   CMCON0         ;digital I/O
BSF     STATUS,RP0     ;Bank 1
BCF     STATUS,RP1     ;
MOVLW   0Ch            ;Set RA<3:2> as inputs
MOVWF   TRISA          ;and set RA<5:4,1:0>
                       ;as outputs
```

4.2 Additional Pin Functions

Every PORTA pin on the PIC12F635/PIC16F636/639 has an interrupt-on-change option and a weak pull-up/pull-down option. RA0 has an Ultra Low-Power Wake-up option. The next three sections describe these functions.

4.2.1 WEAK PULL-UP/PULL-DOWN

Each of the PORTA pins, except RA3, has an internal weak pull-up and pull-down. The WDA bits select either a pull-up or pull-down for an individual port bit. Individual control bits can turn on the pull-up or pull-down. These pull-ups/pull-downs are automatically turned off when the port pin is configured as an output, as an alternate function or on a Power-on Reset, setting the $\overline{\text{RAPU}}$ bit of the OPTION register. A weak pull-up on RA3 is enabled when configured as $\overline{\text{MCLR}}$ in the Configuration Word register and disabled when high voltage is detected, to reduce current consumption through RA3, while in Programming mode.

Note:	PORTA = GPIO TRISA = TRISIO

REGISTER 4-1: PORTA: PORTA REGISTER

U-0	U-0	R/W-x	R/W-x	R-x	R/W-x	R/W-x	R/W-x
—	—	RA5	RA4	RA3	RA2	RA1	RA0
bit 7							bit 0

Legend:			
R = Readable bit	W = Writable bit	U = Unimplemented bit, read as ‘0’	
-n = Value at POR	‘1’ = Bit is set	‘0’ = Bit is cleared	x = Bit is unknown

bit 7-6 **Unimplemented**: Read as ‘0’

bit 5-0 **RA<5:0>**: PORTA I/O Pin bit
1 = Port pin is > V_{IH}
0 = Port pin is < V_{IL}

REGISTER 4-2: TRISA: PORTA TRI-STATE REGISTER

U-0	U-0	R/W-1	R/W-1	R-1	R/W-1	R/W-1	R/W-1
—	—	TRISA5	TRISA4	TRISA3	TRISA2	TRISA1	TRISA0
bit 7							bit 0

Legend:			
R = Readable bit	W = Writable bit	U = Unimplemented bit, read as ‘0’	
-n = Value at POR	‘1’ = Bit is set	‘0’ = Bit is cleared	x = Bit is unknown

bit 7-6 **Unimplemented**: Read as ‘0’

bit 5-0 **TRISA<5:0>:** PORTA Tri-State Control bits
1 = PORTA pin configured as an input (tri-stated)
0 = PORTA pin configured as an output

Note 1: TRISA<3> always reads ‘1’.
2: TRISA<5:4> always reads ‘1’ in XT, HS and LP Oscillator modes.

© 2007 Microchip Technology Inc.

REGISTER 4-3: WDA: WEAK PULL-UP/PULL-DOWN DIRECTION REGISTER

U-0	U-0	R/W-1	R/W-1	U-0	R/W-1	R/W-1	R/W-1
—	—	WDA5	WDA4	—	WDA2	WDA1	WDA0
bit 7							bit 0

Legend:			
R = Readable bit	W = Writable bit	U = Unimplemented bit, read as ‘0’	
-n = Value at POR	‘1’ = Bit is set	‘0’ = Bit is cleared	x = Bit is unknown

bit 7-6 **Unimplemented**: Read as ‘0’

bit 5-4 **WDA<5:4>**: Pull-up/Pull-down Selection bits
1 = Pull-up selected
0 = Pull-down selected

bit 3 **Unimplemented**: Read as ‘0’

bit 2-0 **WDA<2:0>**: Pull-up/Pull-down Selection bits
1 = Pull-up selected
0 = Pull-down selected

Note 1: The weak pull-up/pull-down device is enabled only when the global $\overline{\text{RAPU}}$ bit is enabled, the pin is in Input mode (TRIS = 1), the individual WDA bit is enabled (WDA = 1) and the pin is not configured as an analog input or clock function.

2: RA3 pull-up is enabled when the pin is configured as $\overline{\text{MCLR}}$ in the Configuration Word register and the device is not in Programming mode.

REGISTER 4-4: WPUDA: WEAK PULL-UP/PULL-DOWN ENABLE REGISTER

U-0	U-0	R/W-1	R/W-1	U-0	R/W-1	R/W-1	R/W-1
—	—	WPUDA5(3)	WPUDA4(3)	—	WPUDA2	WPUDA1	WPUDA0
bit 7							bit 0

Legend:			
R = Readable bit	W = Writable bit	U = Unimplemented bit, read as ‘0’	
-n = Value at POR	‘1’ = Bit is set	‘0’ = Bit is cleared	x = Bit is unknown

bit 7-6 **Unimplemented**: Read as ‘0’

bit 5-4 **WPUDA<5:4>**: Pull-up/Pull-down Direction Selection bits(3)
1 = Pull-up/pull-down enabled
0 = Pull-up/pull-down disabled

bit 3 **Unimplemented**: Read as ‘0’

bit 2-0 **WPUDA<2:0>**: Pull-up/Pull-down Direction Selection bits
1 = Pull-up/pull-down enabled
0 = Pull-up/pull-down disabled

Note 1: The weak pull-up/pull-down direction device is enabled only when the global $\overline{\text{RAPU}}$ bit is enabled, the pin is in Input mode (TRIS = 1), the individual WPUDA bit is enabled (WPUDA = 1) and the pin is not configured as an analog input or clock function.

2: RA3 pull-up is enabled when the pin is configured as $\overline{\text{MCLR}}$ in the Configuration Word register and the device is not in Programming mode.

3: WPUDA5 bit can be written if INTOSC is enabled and T1OSC is disabled; otherwise, the bit can not be written and reads as ‘1’. WPUDA4 bit can be written if not configured as OSC2; otherwise, the bit can not be written and reads as ‘1’

4.2.2 INTERRUPT-ON-CHANGE

Each of the PORTA pins is individually configurable as an interrupt-on-change pin. Control bits, IOCAx, enable or disable the interrupt function for each pin. Refer to Register 4-5. The interrupt-on-change is disabled on a Power-on Reset.

For enabled interrupt-on-change pins, the values are compared with the old value latched on the last read of PORTA. The 'mismatch' outputs of the last read are OR'd together to set the PORTA Change Interrupt Flag bit (RAIF) in the INTCON register.

This interrupt can wake the device from Sleep. The user, in the Interrupt Service Routine, clears the interrupt by:

a) Any read or write of PORTA. This will end the mismatch condition, then

b) Clear the flag bit RAIF.

A mismatch condition will continue to set flag bit RAIF. Reading PORTA will end the mismatch condition and allow flag bit RAIF to be cleared. The latch holding the last read value is not affected by a $\overline{\text{MCLR}}$ nor BOR Reset. After these Resets, the RAIF flag will continue to be set if a mismatch is present.

Note:	If a change on the I/O pin should occur when the read operation is being executed (start of the Q2 cycle), then the RAIF interrupt flag may not get set.

REGISTER 4-5: IOCA: INTERRUPT-ON-CHANGE PORTA REGISTER

U-0	U-0	R/W-0	R/W-0	R/W-0	R/W-0	R/W-0	R/W-0
—	—	IOCA5(2)	IOCA4(2)	IOCA3(3)	IOCA2	IOCA1	IOCA0
bit 7							bit 0

Legend:			
R = Readable bit	W = Writable bit	U = Unimplemented bit, read as '0'	
-n = Value at POR	'1' = Bit is set	'0' = Bit is cleared	x = Bit is unknown

bit 7-6 **Unimplemented**: Read as '0'

bit 5-0 **IOCA<5:0>:** Interrupt-on-Change PORTA Control bits(2,3)
1 = Interrupt-on-change enabled(1)
0 = Interrupt-on-change disabled

Note 1: Global Interrupt Enable (GIE) must be enabled for individual interrupts to be recognized.

2: IOCA<5:4> always reads '0' in XT, HS and LP Oscillator modes.

3: IOCA<3> is ignored when WUR is enabled and the device is in Sleep mode.

© 2007 Microchip Technology Inc.

4.2.3 ULTRA LOW-POWER WAKE-UP

The Ultra Low-Power Wake-up (ULPWU) on RA0 allows a slow falling voltage to generate an interrupt-on-change on RA0 without excess current consumption. The mode is selected by setting the ULPWUE bit of the PCON register. This enables a small current sink which can be used to discharge a capacitor on RA0.

To use this feature, the RA0 pin is configured to output '1' to charge the capacitor, interrupt-on-change for RA0 is enabled and RA0 is configured as an input. The ULPWUE bit is set to begin the discharge and a SLEEP instruction is performed. When the voltage on RA0 drops below V_{IL}, an interrupt will be generated which will cause the device to wake-up. Depending on the state of the GIE bit of the INTCON register, the device will either jump to the interrupt vector (0004h) or execute the next instruction when the interrupt event occurs. See **Section 4.2.2 "Interrupt-on-Change"** and **Section 12.9.3 "PORTA Interrupt"** for more information.

This feature provides a low-power technique for periodically waking up the device from Sleep. The time-out is dependent on the discharge time of the RC circuit on RA0. See Example 4-2 for initializing the Ultra Low Power Wake-up module.

The series resistor provides overcurrent protection for the RA0 pin and can allow for software calibration of the time-out (see Figure 4-1). A timer can be used to measure the charge time and discharge time of the capacitor. The charge time can then be adjusted to provide the desired interrupt delay. This technique will compensate for the affects of temperature, voltage and component accuracy. The Ultra Low-Power Wake-up peripheral can also be configured as a simple Programmable Low-Voltage Detect or temperature sensor.

> **Note:** For more information, refer to the Application Note *AN879, "Using the Microchip Ultra Low-Power Wake-up Module"* (DS00879).

EXAMPLE 4-2: ULTRA LOW-POWER WAKE-UP INITIALIZATION

```
BANKSEL PORTA        ;
BSF     PORTA,0      ;Set RA0 data latch
MOVLW   H'7'         ;Turn off
MOVWF   CMCON0       ; comparators
BANKSEL TRISA        ;
BCF     TRISA,0      ;Output high to
CALL    CapDelay     ; charge capacitor
BSF     PCON,ULPWUE  ;Enable ULP Wake-up
BSF     IOCA,0       ;Select RA0 IOC
BSF     TRISA,0      ;RA0 to input
MOVLW   B'10001000'  ;Enable interrupt
MOVWF   INTCON       ; and clear flag
SLEEP                ;Wait for IOC
NOP                  ;
```

4.2.4 PIN DESCRIPTIONS AND DIAGRAMS

Each PORTA pin is multiplexed with other functions. The pins and their combined functions are briefly described here. For specific information about individual functions, such as the comparator, refer to the appropriate section in this data sheet.

4.2.4.1 RA0/C1IN+/ICSPDAT/ULPWU

Figure 4-2 shows the diagram for this pin. The RA0 pin is configurable to function as one of the following:

- a general purpose I/O
- an analog input to the comparator
- In-Circuit Serial Programming™ data
- an analog input for the Ultra Low-Power Wake-up

FIGURE 4-1: BLOCK DIAGRAM OF RA0

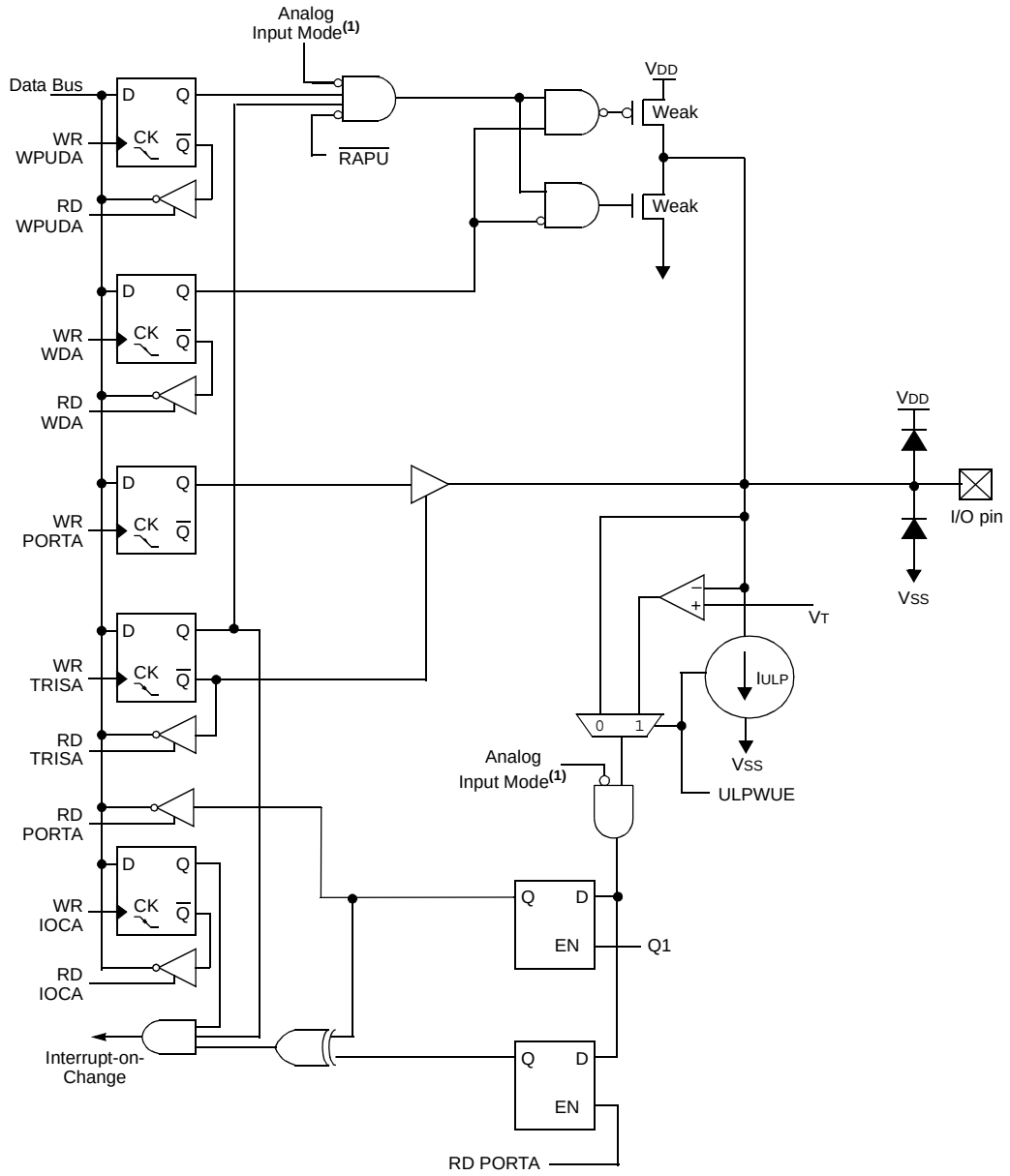

Note 1: Comparator mode determines Analog Input mode.

© 2007 Microchip Technology Inc.

4.2.4.2 RA1/C1IN-/VREF/ICSPCLK

Figure 4-2 shows the diagram for this pin. The RA1 pin is configurable to function as one of the following:

- a general purpose I/O
- an analog input to the comparator
- In-Circuit Serial Programming™ clock

FIGURE 4-2: BLOCK DIAGRAM OF RA1

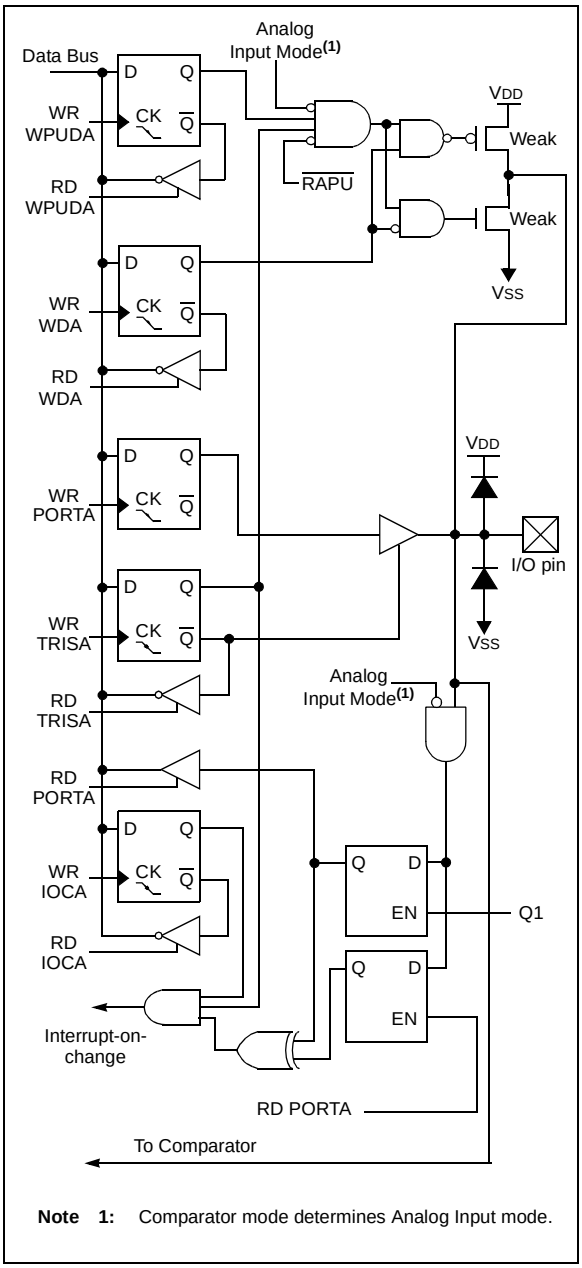

4.2.4.3 RA2/T0CKI/INT/C1OUT

Figure 4-3 shows the diagram for this pin. The RA2 pin is configurable to function as one of the following:

- a general purpose I/O
- the clock input for Timer0
- an external edge-triggered interrupt
- a digital output from the comparator

FIGURE 4-3: BLOCK DIAGRAM OF RA2

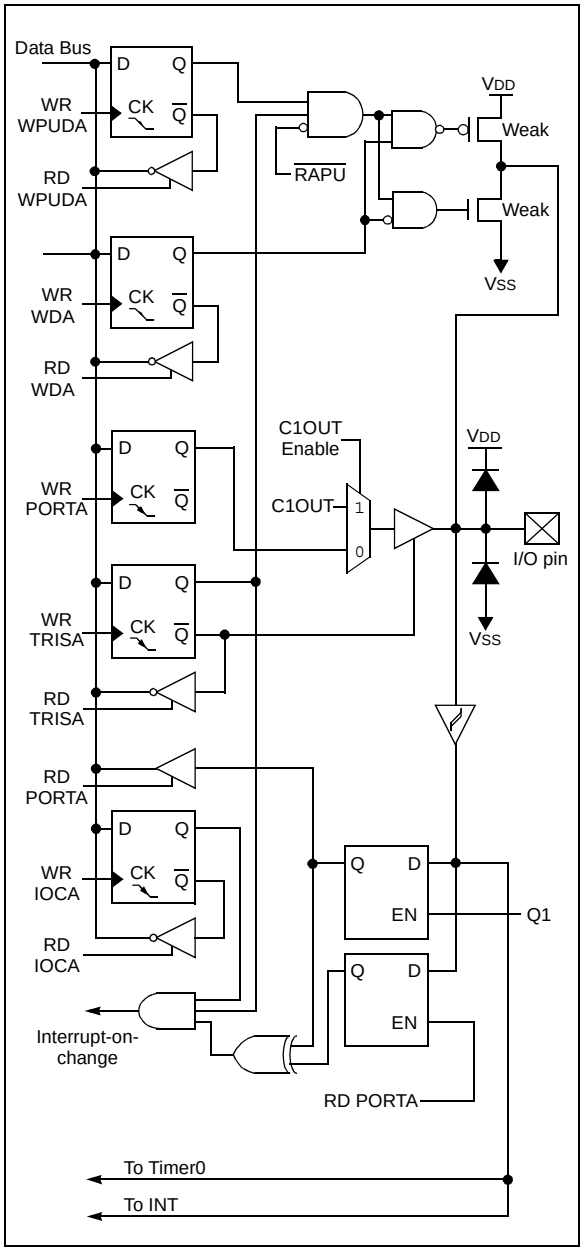

4.2.4.4 RA3/$\overline{\text{MCLR}}$/VPP

Figure 4-4 shows the diagram for this pin. The RA3 pin is configurable to function as one of the following:

- a general purpose input
- as Master Clear Reset with weak pull-up
- a high-voltage detect for Program mode entry

FIGURE 4-4: BLOCK DIAGRAM OF RA3

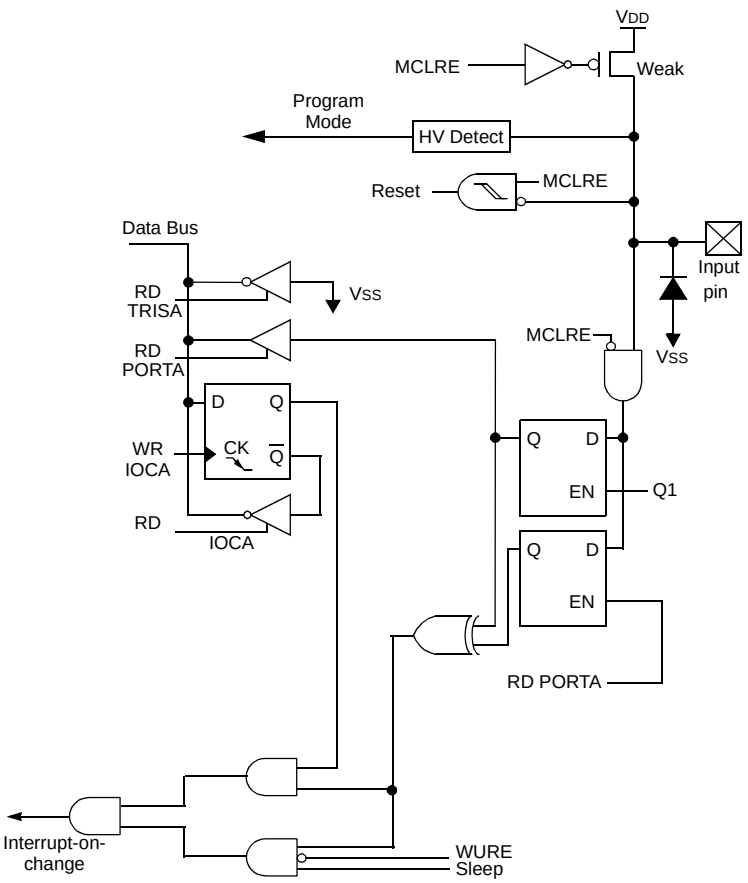

© 2007 Microchip Technology Inc.

4.2.4.5 RA4/$\overline{\text{T1G}}$/OSC2/CLKOUT

Figure 4-5 shows the diagram for this pin. The RA4 pin is configurable to function as one of the following:

- a general purpose I/O
- a Timer1 gate input
- a crystal/resonator connection
- a clock output

FIGURE 4-5: BLOCK DIAGRAM OF RA4

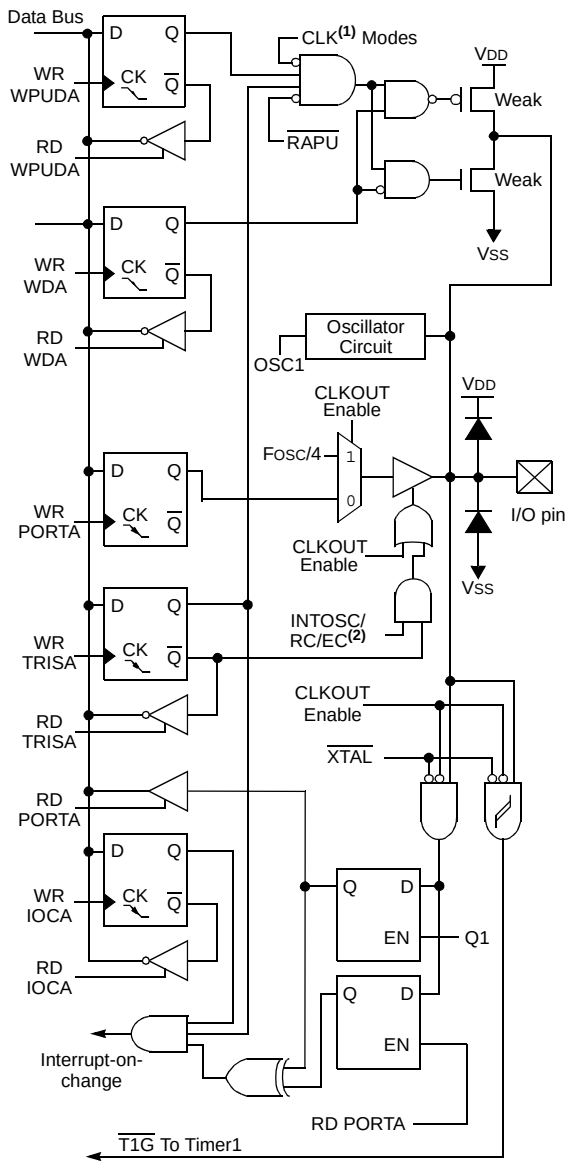

Note 1: Oscillator modes are XT, HS, LP, LPTMR1 and CLKOUT Enable.

2: With CLKOUT option.

4.2.4.6 RA5/T1CKI/OSC1/CLKIN

Figure 4-6 shows the diagram for this pin. The RA5 pin is configurable to function as one of the following:

- a general purpose I/O
- a Timer1 clock input
- a crystal/resonator connection
- a clock input

FIGURE 4-6: BLOCK DIAGRAM OF RA5

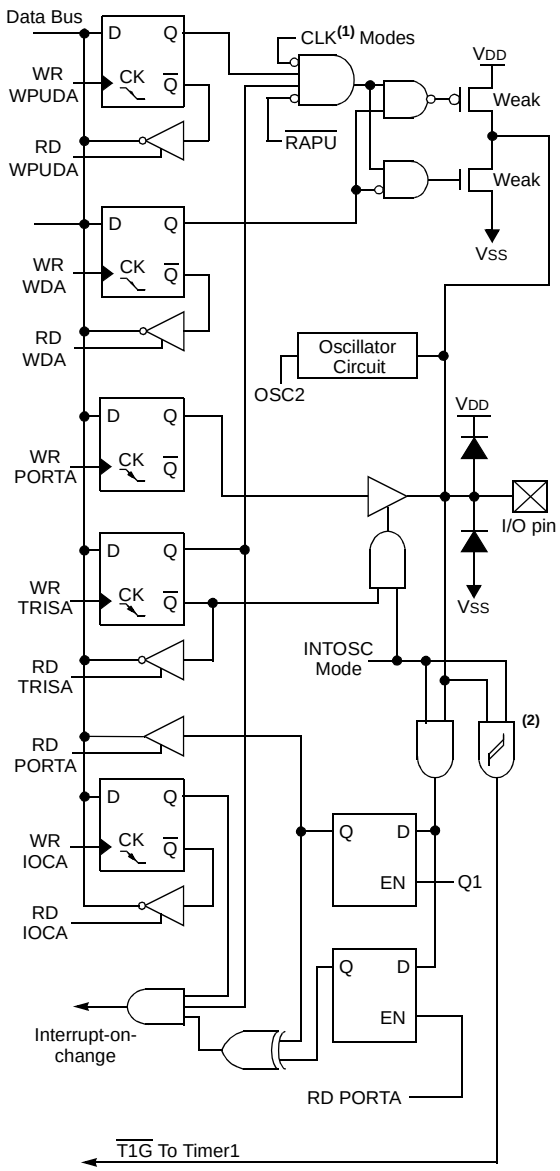

Note 1: Oscillator modes are XT, HS, LP and LPTMR1.

2: When using Timer1 with LP oscillator, the Schmitt Trigger is bypassed.

TABLE 4-1: SUMMARY OF REGISTERS ASSOCIATED WITH PORTA

Name	Bit 7	Bit 6	Bit 5	Bit 4	Bit 3	Bit 2	Bit 1	Bit 0	Value on POR, BOR, WUR	Value on all other Resets
PORTA	—	—	RA5	RA4	RA3	RA2	RA1	RA0	--xx xx00	--uu uu00
INTCON	GIE	PEIE	T0IE	INTE	RAIE	T0IF	INTF	RAIF	0000 000x	0000 000x
TMR1L	Holding Register for the Least Significant Byte of the 16-bit TMR1 Register								xxxx xxxx	uuuu uuuu
TMR1H	Holding Register for the Most Significant Byte of the 16-bit TMR1 Register								xxxx xxxx	uuuu uuuu
T1CON	T1GINV	TMR1GE	T1CKPS1	T1CKPS0	T1OSCEN	$\overline{\text{T1SYNC}}$	TMR1CS	TMR1ON	0000 0000	uuuu uuuu
CMCON1	—	—	—	—	—	—	T1GSS	CxSYNC	---- --10	---- --10
CMCON0	C2OUT	C1OUT	C2INV	C1INV	CIS	CM2	CM1	CM0	0000 0000	0000 0000
OPTION_REG	$\overline{\text{RAPU}}$	INTEDG	T0CS	T0SE	PSA	PS2	PS1	PS0	1111 1111	1111 1111
TRISA	—	—	TRISA5	TRISA4	TRISA3	TRISA2	TRISA1	TRISA0	--11 1111	--11 1111
WPUDA	—	—	WPUDA5	WPUDA4	—	WPUDA2	WPUDA1	WPUDA0	--11 -111	--11 -111
IOCA	—	—	IOCA5	IOCA4	IOCA3	IOCA2	IOCA1	IOCA0	--00 0000	--00 0000
WDA	—	—	WDA5	WDA4	—	WDA2	WDA1	WDA0	--11 -111	--11 -111

Legend: x = unknown, u = unchanged, – = unimplemented locations read as '0'. Shaded cells are not used by PORTA.

© 2007 Microchip Technology Inc.

4.3 PORTC

PORTC is a general purpose I/O port consisting of 6 bidirectional pins. The pins can be configured for either digital I/O or analog input to comparator. For specific information about individual functions, refer to the appropriate section in this data sheet.

Note:	The CMCON0 register must be initialized to configure an analog channel as a digital input. Pins configured as analog inputs will read '0'.

EXAMPLE 4-3: INITIALIZING PORTC

```
BANKSEL PORTC          ;
CLRF    PORTC          ;Init PORTC
MOVLW   07h            ;Set RC<4,1:0> to
MOVWF   CMCON0         ;digital I/O
BANKSEL TRISC          ;
MOVLW   0Ch            ;Set RC<3:2> as inputs
MOVWF   TRISC          ;and set RC<5:4,1:0>
                       ;as outputs
```

REGISTER 4-6: PORTC: PORTC REGISTER

U-0	U-0	R/W-x	R/W-x	R/W-x	R/W-x	R/W-0	R/W-0
—	—	RC5	RC4	RC3	RC2	RC1	RC0
bit 7							bit 0

Legend:			
R = Readable bit	W = Writable bit	U = Unimplemented bit, read as '0'	
-n = Value at POR	'1' = Bit is set	'0' = Bit is cleared	x = Bit is unknown

bit 7-6 **Unimplemented**: Read as '0'

bit 5-0 **RC<5:0>:** PORTC General Purpose I/O Pin bits
1 = Port pin is > V_{IH}
0 = Port pin is < V_{IL}

REGISTER 4-7: TRISC: PORTC TRI-STATE REGISTER

U-0	U-0	R/W-1	R/W-1	R-1	R/W-1	R/W-1	R/W-1
—	—	TRISC5	TRISC4	TRISC3	TRISC2	TRISC1	TRISC0
bit 7							bit 0

Legend:			
R = Readable bit	W = Writable bit	U = Unimplemented bit, read as '0'	
-n = Value at POR	'1' = Bit is set	'0' = Bit is cleared	x = Bit is unknown

bit 7-6 **Unimplemented**: Read as '0'

bit 5-0 **TRISC<5:0>:** PORTC Tri-State Control bits
1 = PORTC pin configured as an input (tri-stated)
0 = PORTC pin configured as an output

4.3.1 RC0/C2IN+

Figure 4-7 shows the diagram for this pin. The RC0 pin is configurable to function as one of the following:

- a general purpose I/O
- an analog input to the comparator

4.3.2 RC1/C2IN-

Figure 4-7 shows the diagram for this pin. The RC1 pin is configurable to function as one of the following:

- a general purpose I/O
- an analog input to the comparator

4.3.3 RC2

Figure 4-8 shows the diagram for this pin. The RC2 pin is configurable to function as a general purpose I/O.

4.3.4 RC3

Figure 4-8 shows the diagram for this pin. The RC3 pin is configurable to function as a general purpose I/O.

4.3.5 RC5

Figure 4-8 shows the diagram for this pin. The RC5 pin is configurable to function as a general purpose I/O.

FIGURE 4-7: BLOCK DIAGRAM OF RC0 AND RC1

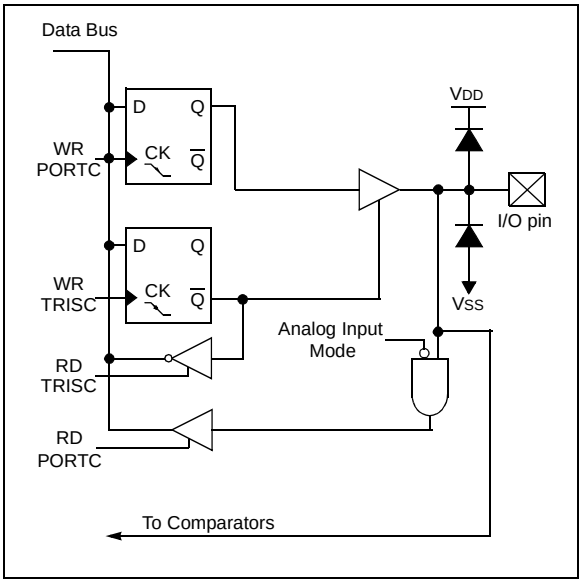

FIGURE 4-8: BLOCK DIAGRAM OF RC2, RC3 AND RC5

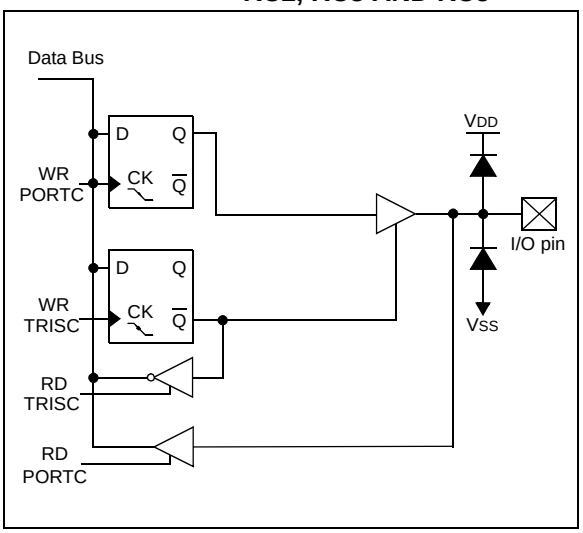

© 2007 Microchip Technology Inc.

4.3.6 RC4/C2OUT

Figure 4-9 shows the diagram for this pin. The RC4 pin is configurable to function as one of the following:

- a general purpose I/O
- a digital output from the comparator

FIGURE 4-9: BLOCK DIAGRAM OF RC4

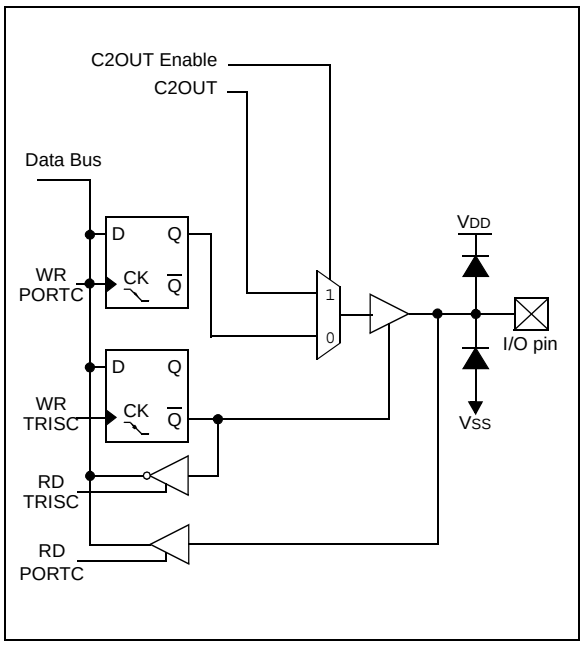

TABLE 4-2: SUMMARY OF REGISTERS ASSOCIATED WITH PORTC

Name	Bit 7	Bit 6	Bit 5	Bit 4	Bit 3	Bit 2	Bit 1	Bit 0	Value on POR, BOR, WUR	Value on all other Resets
PORTC	—	—	RC5	RC4	RC3	RC2	RC1	RC0	--xx xx00	--uu uu00
CMCON0	C2OUT	C1OUT	C2INV	C1INV	CIS	CM2	CM1	CM0	0000 0000	0000 0000
TRISC	—	—	TRISC5	TRISC4	TRISC3	TRISC2	TRISC1	TRISC0	--11 1111	--11 1111

Legend: x = unknown, u = unchanged, – = unimplemented locations read as '0'. Shaded cells are not used by PORTA.

NOTES:

© 2007 Microchip Technology Inc.

5.0 TIMER0 MODULE

The Timer0 module is an 8-bit timer/counter with the following features:

- 8-bit timer/counter register (TMR0)
- 8-bit prescaler (shared with Watchdog Timer)
- Programmable internal or external clock source
- Programmable external clock edge selection
- Interrupt on overflow

Figure 5-1 is a block diagram of the Timer0 module.

5.1 Timer0 Operation

When used as a timer, the Timer0 module can be used as either an 8-bit timer or an 8-bit counter.

5.1.1 8-BIT TIMER MODE

When used as a timer, the Timer0 module will increment every instruction cycle (without prescaler). Timer mode is selected by clearing the T0CS bit of the OPTION register to '0'.

When TMR0 is written, the increment is inhibited for two instruction cycles immediately following the write.

Note:	The value written to the TMR0 register can be adjusted, in order to account for the two instruction cycle delay when TMR0 is written.

5.1.2 8-BIT COUNTER MODE

When used as a counter, the Timer0 module will increment on every rising or falling edge of the T0CKI pin. The incrementing edge is determined by the T0SE bit of the OPTION register. Counter mode is selected by setting the T0CS bit of the OPTION register to '1'.

FIGURE 5-1: BLOCK DIAGRAM OF THE TIMER0/WDT PRESCALER

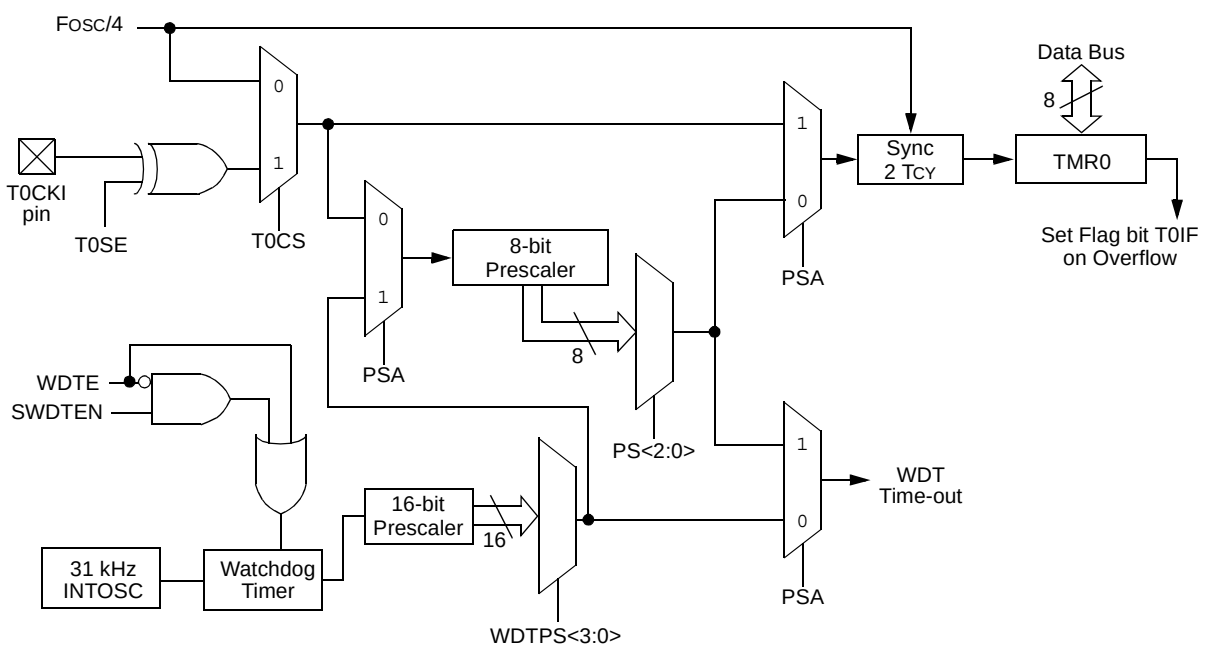

Note 1: T0SE, T0CS, PSA, PS<2:0> are bits in the OPTION register.
2: SWDTEN and WDTPS<3:0> are bits in the WDTCON register.
3: WDTE bit is in the Configuration Word register.

5.1.3 SOFTWARE PROGRAMMABLE PRESCALER

A single software programmable prescaler is available for use with either Timer0 or the Watchdog Timer (WDT), but not both simultaneously. The prescaler assignment is controlled by the PSA bit of the OPTION register. To assign the prescaler to Timer0, the PSA bit must be cleared to a ‘0’.

There are 8 prescaler options for the Timer0 module ranging from 1:2 to 1:256. The prescale values are selectable via the PS<2:0> bits of the OPTION register. In order to have a 1:1 prescaler value for the Timer0 module, the prescaler must be assigned to the WDT module.

The prescaler is not readable or writable. When assigned to the Timer0 module, all instructions writing to the TMR0 register will clear the prescaler.

When the prescaler is assigned to WDT, a `CLRWDT` instruction will clear the prescaler along with the WDT.

5.1.3.1 Switching Prescaler Between Timer0 and WDT Modules

As a result of having the prescaler assigned to either Timer0 or the WDT, it is possible to generate an unintended device Reset when switching prescaler values. When changing the prescaler assignment from Timer0 to the WDT module, the instruction sequence shown in Example 5-1, must be executed.

EXAMPLE 5-1: CHANGING PRESCALER (TIMER0 → WDT)

```
BANKSEL  TMR0            ;
CLRWDT                   ;Clear WDT
CLRF     TMR0            ;Clear TMR0 and
                         ;prescaler
BANKSEL  OPTION_REG      ;
BSF      OPTION_REG,PSA  ;Select WDT
CLRWDT                   ;
                         ;
MOVLW    b’11111000’     ;Mask prescaler
ANDWF    OPTION_REG,W    ;bits
IORLW    b’00000101’     ;Set WDT prescaler
MOVWF    OPTION_REG      ;to 1:32
```

When changing the prescaler assignment from the WDT to the Timer0 module, the following instruction sequence must be executed (see Example 5-2).

EXAMPLE 5-2: CHANGING PRESCALER (WDT → TIMER0)

```
CLRWDT                   ;Clear WDT and
                         ;prescaler
BANKSEL OPTION_REG       ;
MOVLW   b’11110000’      ;Mask TMR0 select and
ANDWF   OPTION_REG,W     ;prescaler bits
IORLW   b’00000011’      ;Set prescale to 1:16
MOVWF   OPTION_REG       ;
```

5.1.4 TIMER0 INTERRUPT

Timer0 will generate an interrupt when the TMR0 register overflows from FFh to 00h. The T0IF interrupt flag bit of the INTCON register is set every time the TMR0 register overflows, regardless of whether or not the Timer0 interrupt is enabled. The T0IF bit must be cleared in software. The Timer0 interrupt enable is the T0IE bit of the INTCON register..

Note:	The Timer0 interrupt cannot wake the processor from Sleep since the timer is frozen during Sleep.

5.1.5 USING TIMER0 WITH AN EXTERNAL CLOCK

When Timer0 is in Counter mode, the synchronization of the T0CKI input and the Timer0 register is accomplished by sampling the prescaler output on the Q2 and Q4 cycles of the internal phase clocks. Therefore, the high and low periods of the external clock source must meet the timing requirements as shown in the **Section 15.0 “Electrical Specifications”**.

© 2007 Microchip Technology Inc.

REGISTER 5-1: OPTION_REG: OPTION REGISTER

R/W-1	R/W-1	R/W-1	R/W-1	R/W-1	R/W-1	R/W-1	R/W-1
$\overline{\text{RAPU}}$	INTEDG	T0CS	T0SE	PSA	PS2	PS1	PS0
bit 7							bit 0

Legend:			
R = Readable bit	W = Writable bit	U = Unimplemented bit, read as ‘0’	
-n = Value at POR	‘1’ = Bit is set	‘0’ = Bit is cleared	x = Bit is unknown

bit 7 **$\overline{\text{RAPU}}$:** PORTA Pull-up Enable bit
1 = PORTA pull-ups are disabled
0 = PORTA pull-ups are enabled by individual PORT latch values

bit 6 **INTEDG:** Interrupt Edge Select bit
1 = Interrupt on rising edge of INT pin
0 = Interrupt on falling edge of INT pin

bit 5 **T0CS:** TMR0 Clock Source Select bit
1 = Transition on T0CKI pin
0 = Internal instruction cycle clock (FOSC/4)

bit 4 **T0SE:** TMR0 Source Edge Select bit
1 = Increment on high-to-low transition on T0CKI pin
0 = Increment on low-to-high transition on T0CKI pin

bit 3 **PSA:** Prescaler Assignment bit
1 = Prescaler is assigned to the WDT
0 = Prescaler is assigned to the Timer0 module

bit 2-0 **PS<2:0>:** Prescaler Rate Select bits

BIT VALUE	TMR0 RATE	WDT RATE
000	1 : 2	1 : 1
001	1 : 4	1 : 2
010	1 : 8	1 : 4
011	1 : 16	1 : 8
100	1 : 32	1 : 16
101	1 : 64	1 : 32
110	1 : 128	1 : 64
111	1 : 256	1 : 128

Note 1: A dedicated 16-bit WDT postscaler is available. See **Section 12.11 “Watchdog Timer (WDT)”** for more information.

TABLE 5-1: SUMMARY OF REGISTERS ASSOCIATED WITH TIMER0

Name	Bit 7	Bit 6	Bit 5	Bit 4	Bit 3	Bit 2	Bit 1	Bit 0	Value on: POR, BOR	Value on all other Resets
TMR0	Timer0 Module Register								xxxx xxxx	uuuu uuuu
INTCON	GIE	PEIE	T0IE	INTE	RAIE	T0IF	INTF	RAIF	0000 000x	0000 000x
OPTION_REG	$\overline{\text{RAPU}}$	INTEDG	T0CS	T0SE	PSA	PS2	PS1	PS0	1111 1111	1111 1111
TRISA	—	—	TRISA5	TRISA4	TRISA3	TRISA2	TRISA1	TRISA0	--11 1111	--11 1111

Legend: – = Unimplemented locations, read as ‘0’, u = unchanged, x = unknown. Shaded cells are not used by the Timer0 module.

6.0 TIMER1 MODULE WITH GATE CONTROL

The Timer1 module is a 16-bit timer/counter with the following features:

- 16-bit timer/counter register pair (TMR1H:TMR1L)
- Programmable internal or external clock source
- 3-bit prescaler
- Optional LP oscillator
- Synchronous or asynchronous operation
- Timer1 gate (count enable) via comparator or $\overline{\text{T1G}}$ pin
- Interrupt on overflow
- Wake-up on overflow (external clock, Asynchronous mode only)
- Comparator output synchronization to Timer1 clock

Figure 6-1 is a block diagram of the Timer1 module.

6.1 Timer1 Operation

The Timer1 module is a 16-bit incrementing counter which is accessed through the TMR1H:TMR1L register pair. Writes to TMR1H or TMR1L directly update the counter.

When used with an internal clock source, the module is a timer. When used with an external clock source, the module can be used as either a timer or counter.

6.2 Clock Source Selection

The TMR1CS bit of the T1CON register is used to select the clock source. When TMR1CS = 0, the clock source is FOSC/4. When TMR1CS = 1, the clock source is supplied externally.

Clock Source	T1OSCEN	FOSC Mode	T1CS
FOSC/4	x	xxx	x
T1CKI pin	x		1
T1LPOSC	1	LP or INTOSCIO	

© 2007 Microchip Technology Inc.

FIGURE 6-1: TIMER1 BLOCK DIAGRAM

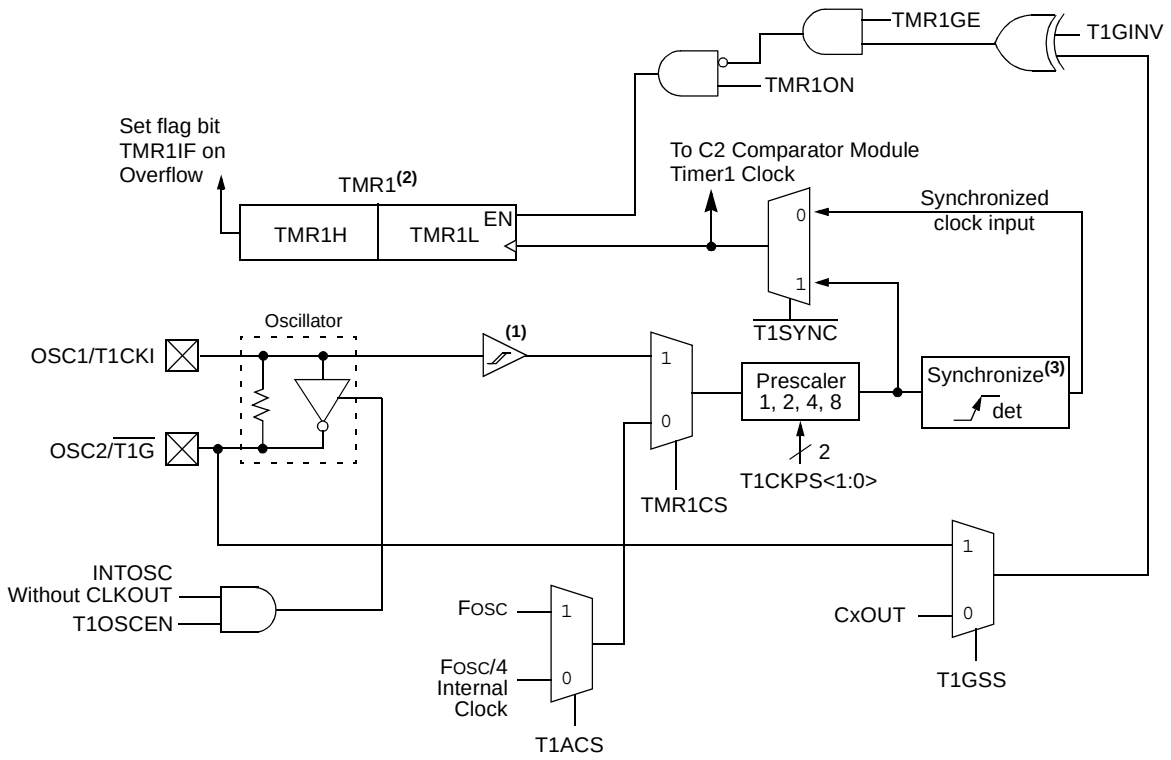

Note 1: ST Buffer is low power type when using LP osc, or high speed type when using T1CKI.
2: Timer1 register increments on rising edge.
3: Synchronize does not operate while in Sleep.

6.2.1 INTERNAL CLOCK SOURCE

When the internal clock source is selected the TMR1H:TMR1L register pair will increment on multiples of T_{CY} as determined by the Timer1 prescaler.

6.2.2 EXTERNAL CLOCK SOURCE

When the external clock source is selected, the Timer1 module may work as a timer or a counter.

When counting, Timer1 is incremented on the rising edge of the external clock input T1CKI. In addition, the Counter mode clock can be synchronized to the microcontroller system clock or run asynchronously.

In Counter mode, a falling edge must be registered by the counter prior to the first incrementing rising edge after one or more of the following conditions:

- Timer1 is enabled after POR or BOR Reset
- A write to TMR1H or TMR1L
- T1CKI is high when Timer1 is disabled and when Timer1 is reenabled T1CKI is low. See Figure 6-2.

6.3 Timer1 Prescaler

Timer1 has four prescaler options allowing 1, 2, 4 or 8 divisions of the clock input. The T1CKPS bits of the T1CON register control the prescale counter. The prescale counter is not directly readable or writable; however, the prescaler counter is cleared upon a write to TMR1H or TMR1L.

6.4 Timer1 Oscillator

A low-power 32.768 kHz crystal oscillator is built-in between pins OSC1 (input) and OSC2 (amplifier output). The oscillator is enabled by setting the T1OSCEN control bit of the T1CON register. The oscillator will continue to run during Sleep.

The Timer1 oscillator is shared with the system LP oscillator. Thus, Timer1 can use this mode only when the primary system clock is derived from the internal oscillator or when in LP oscillator mode. The user must provide a software time delay to ensure proper oscillator start-up.

TRISA5 and TRISA4 bits are set when the Timer1 oscillator is enabled. RA5 and RA4 bits read as '0' and TRISA5 and TRISA4 bits read as '1'.

Note:	The oscillator requires a start-up and stabilization time before use. Thus, T1OSCEN should be set and a suitable delay observed prior to enabling Timer1.

6.5 Timer1 Operation in Asynchronous Counter Mode

If control bit $\overline{\text{T1SYNC}}$ of the T1CON register is set, the external clock input is not synchronized. The timer continues to increment asynchronous to the internal phase clocks. The timer will continue to run during Sleep and can generate an interrupt on overflow, which will wake-up the processor. However, special precautions in software are needed to read/write the timer (see **Section 6.5.1 "Reading and Writing Timer1 in Asynchronous Counter Mode"**).

Note:	When switching from synchronous to asynchronous operation, it is possible to skip an increment. When switching from asynchronous to synchronous operation, it is possible to produce a single spurious increment.

6.5.1 READING AND WRITING TIMER1 IN ASYNCHRONOUS COUNTER MODE

Reading TMR1H or TMR1L while the timer is running from an external asynchronous clock will ensure a valid read (taken care of in hardware). However, the user should keep in mind that reading the 16-bit timer in two 8-bit values itself, poses certain problems, since the timer may overflow between the reads.

For writes, it is recommended that the user simply stop the timer and write the desired values. A write contention may occur by writing to the timer registers, while the register is incrementing. This may produce an unpredictable value in the TMR1H:TTMR1L register pair.

6.6 Timer1 Gate

Timer1 gate source is software configurable to be the $\overline{\text{T1G}}$ pin or the output of Comparator 2. This allows the device to directly time external events using $\overline{\text{T1G}}$ or analog events using Comparator 2. See the CMCON1 register (Register 7-3) for selecting the Timer1 gate source. This feature can simplify the software for a Delta-Sigma A/D converter and many other applications. For more information on Delta-Sigma A/D converters, see the Microchip web site (www.microchip.com).

Note:	TMR1GE bit of the T1CON register must be set to use either $\overline{\text{T1G}}$ or C2OUT as the Timer1 gate source. See Register 7-3 for more information on selecting the Timer1 gate source.

Timer1 gate can be inverted using the T1GINV bit of the T1CON register, whether it originates from the $\overline{\text{T1G}}$ pin or Comparator 2 output. This configures Timer1 to measure either the active-high or active-low time between events.

© 2007 Microchip Technology Inc.

6.7 Timer1 Interrupt

The Timer1 register pair (TMR1H:TMR1L) increments to FFFFh and rolls over to 0000h. When Timer1 rolls over, the Timer1 interrupt flag bit of the PIR1 register is set. To enable the interrupt on rollover, you must set these bits:

- Timer1 interrupt enable bit of the PIE1 register
- PEIE bit of the INTCON register
- GIE bit of the INTCON register

The interrupt is cleared by clearing the TMR1IF bit in the Interrupt Service Routine.

Note:	The TMR1H:TTMR1L register pair and the TMR1IF bit should be cleared before enabling interrupts.

6.8 Timer1 Operation During Sleep

Timer1 can only operate during Sleep when setup in Asynchronous Counter mode. In this mode, an external crystal or clock source can be used to increment the counter. To set up the timer to wake the device:

- TMR1ON bit of the T1CON register must be set
- TMR1IE bit of the PIE1 register must be set
- PEIE bit of the INTCON register must be set

The device will wake-up on an overflow and execute the next instruction. If the GIE bit of the INTCON register is set, the device will call the Interrupt Service Routine (0004h).

6.9 Comparator Synchronization

The same clock used to increment Timer1 can also be used to synchronize the comparator output. This feature is enabled in the Comparator module.

When using the comparator for Timer1 gate, the comparator output should be synchronized to Timer1. This ensures Timer1 does not miss an increment if the comparator changes.

For more information, see **Section 7.0 “Comparator Module”**.

FIGURE 6-2: TIMER1 INCREMENTING EDGE

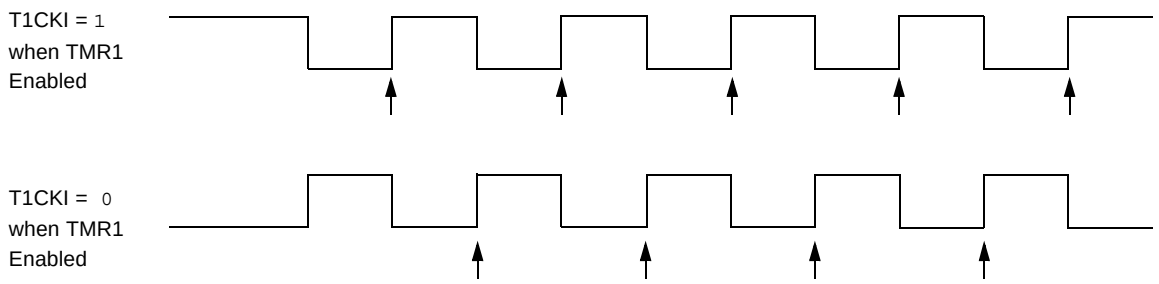

Note 1: Arrows indicate counter increments.

2: In Counter mode, a falling edge must be registered by the counter prior to the first incrementing rising edge of the clock.

6.10 Timer1 Control Register

The Timer1 Control register (T1CON), shown in Register 6-1, is used to control Timer1 and select the various features of the Timer1 module.

REGISTER 6-1: T1CON: TIMER 1 CONTROL REGISTER

R/W-0	R/W-0	R/W-0	R/W-0	R/W-0	R/W-0	R/W-0	R/W-0
T1GINV(1)	TMR1GE(2)	T1CKPS1	T1CKPS0	T1OSCEN	$\overline{\text{T1SYNC}}$	TMR1CS	TMR1ON
bit 7							bit 0

Legend:			
R = Readable bit	W = Writable bit	U = Unimplemented bit, read as ‘0’	
-n = Value at POR	‘1’ = Bit is set	‘0’ = Bit is cleared	x = Bit is unknown

bit 7 **T1GINV:** Timer1 Gate Invert bit(1)
1 = Timer1 gate is active-high (Timer1 counts when gate is high)
0 = Timer1 gate is active-low (Timer1 counts when gate is low)

bit 6 **TMR1GE:** Timer1 Gate Enable bit(2)
If TMR1ON = 0:
This bit is ignored
If TMR1ON = 1:
1 = Timer1 is on if Timer1 gate is active
0 = Timer1 is on

bit 5-4 **T1CKPS<1:0>:** Timer1 Input Clock Prescale Select bits
11 = 1:8 Prescale Value
10 = 1:4 Prescale Value
01 = 1:2 Prescale Value
00 = 1:1 Prescale Value

bit 3 **T1OSCEN:** LP Oscillator Enable Control bit
If INTOSC without CLKOUT oscillator is active:
1 = LP oscillator is enabled for Timer1 clock
0 = LP oscillator is off
Else:
This bit is ignored. LP oscillator is disabled.

bit 2 **$\overline{\text{T1SYNC}}$:** Timer1 External Clock Input Synchronization Control bit
TMR1CS = 1:
1 = Do not synchronize external clock input
0 = Synchronize external clock input
TMR1CS = 0:
This bit is ignored. Timer1 uses the internal clock

bit 1 **TMR1CS:** Timer1 Clock Source Select bit
1 = External clock from T1CKI pin (on the rising edge)
0 = Internal clock (FOSC/4)

bit 0 **TMR1ON:** Timer1 On bit
1 = Enables Timer1
0 = Stops Timer1

Note 1: T1GINV bit inverts the Timer1 gate logic, regardless of source.
2: TMR1GE bit must be set to use either $\overline{\text{T1G}}$ pin or C2OUT, as selected by the T1GSS bit of the CMCON1 register, as a Timer1 gate source.

© 2007 Microchip Technology Inc.

TABLE 6-1: SUMMARY OF REGISTERS ASSOCIATED WITH TIMER1

Name	Bit 7	Bit 6	Bit 5	Bit 4	Bit 3	Bit 2	Bit 1	Bit 0	Value on POR, BOR	Value on all other Resets
CMCON1	—	—	—	—	—	—	T1GSS	CMSYNC	---- --10	00-- --10
INTCON	GIE	PEIE	T0IE	INTE	RAIE	T0IF	INTF	RAIF	0000 000x	0000 000x
PIE1	EEIE	LVDIE	CRIE	C2IE(1)	C1IE	OSFIE	—	TMR1IE	000- 00-0	000- 00-0
PIR1	EEIF	LVDIF	CRIF	C2IF(1)	C1IF	OSFIF	—	TMR1IF	000- 00-0	000- 00-0
TMR1H	Holding Register for the Most Significant Byte of the 16-bit TMR1 Register								xxxx xxxx	uuuu uuuu
TMR1L	Holding Register for the Least Significant Byte of the 16-bit TMR1 Register								xxxx xxxx	uuuu uuuu
T1CON	T1GINV	TMR1GE	T1CKPS1	T1CKPS0	T1OSCEN	$\overline{\text{T1SYNC}}$	TMR1CS	TMR1ON	0000 0000	uuuu uuuu

Legend: x = unknown, u = unchanged, – = unimplemented, read as '0'. Shaded cells are not used by the Timer1 module.
Note 1: PIC16F636/639 only.

NOTES:

© 2007 Microchip Technology Inc.

7.0 COMPARATOR MODULE

Comparators are used to interface analog circuits to a digital circuit by comparing two analog voltages and providing a digital indication of their relative magnitudes. The comparators are very useful mixed signal building blocks because they provide analog functionality independent of the program execution. The Analog Comparator module includes the following features:

- Dual comparators (PIC16F636/639 only)
- Multiple comparator configurations
- Comparator(s) output is available internally/externally
- Programmable output polarity
- Interrupt-on-change
- Wake-up from Sleep
- Timer1 gate (count enable)
- Output synchronization to Timer1 clock input
- Programmable voltage reference

7.1 Comparator Overview

A comparator is shown in Figure 7-1 along with the relationship between the analog input levels and the digital output. When the analog voltage at VIN+ is less than the analog voltage at VIN-, the output of the comparator is a digital low level. When the analog voltage at VIN+ is greater than the analog voltage at VIN-, the output of the comparator is a digital high level.

The PIC12F635 contains a single comparator as shown in Figure 7-2.

The PIC16F636/639 devices contains two comparators as shown in Figure 7-3 and Figure 7-4. The comparators are not independently configurable.

FIGURE 7-1: SINGLE COMPARATOR

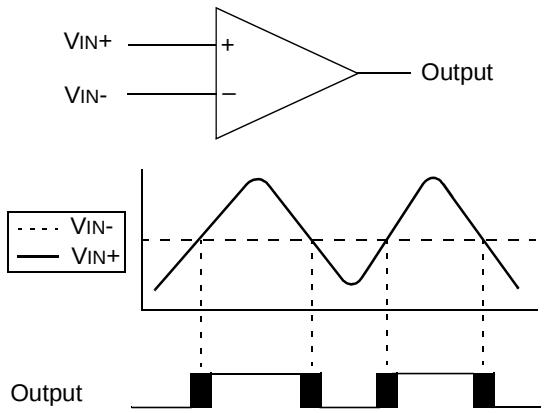

Note: The black areas of the output of the comparator represents the uncertainty due to input offsets and response time.

FIGURE 7-2: COMPARATOR OUTPUT BLOCK DIAGRAM (PIC12F635)

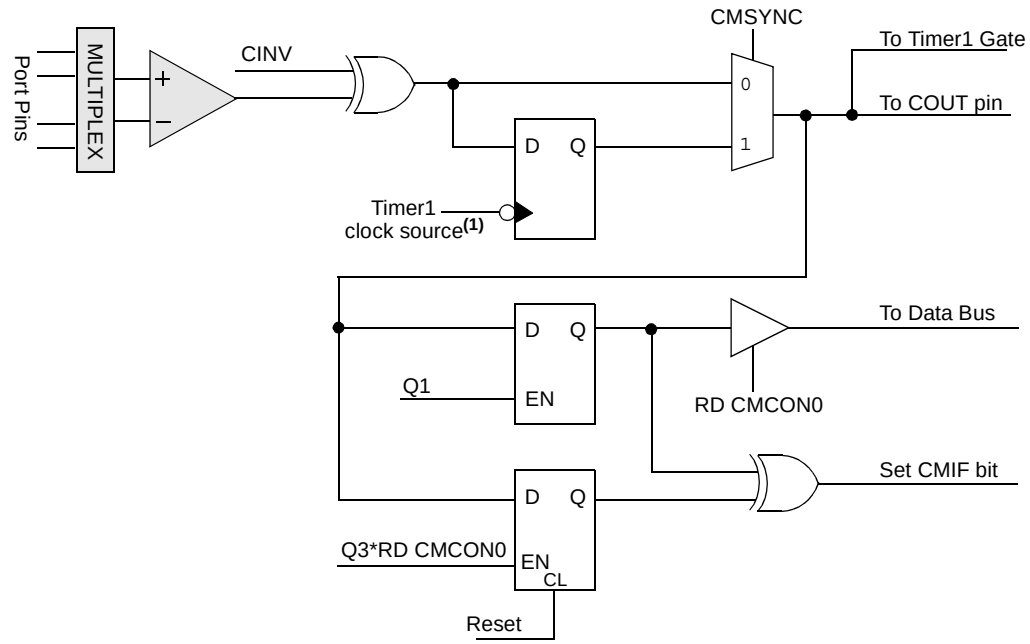

Note 1: Comparator output is latched on falling edge of Timer1 clock source.

2: Q1 and Q3 are phases of the four-phase system clock (FOSC).

3: Q1 is held high during Sleep mode.

FIGURE 7-3: COMPARATOR C1 OUTPUT BLOCK DIAGRAM (PIC16F636/639)

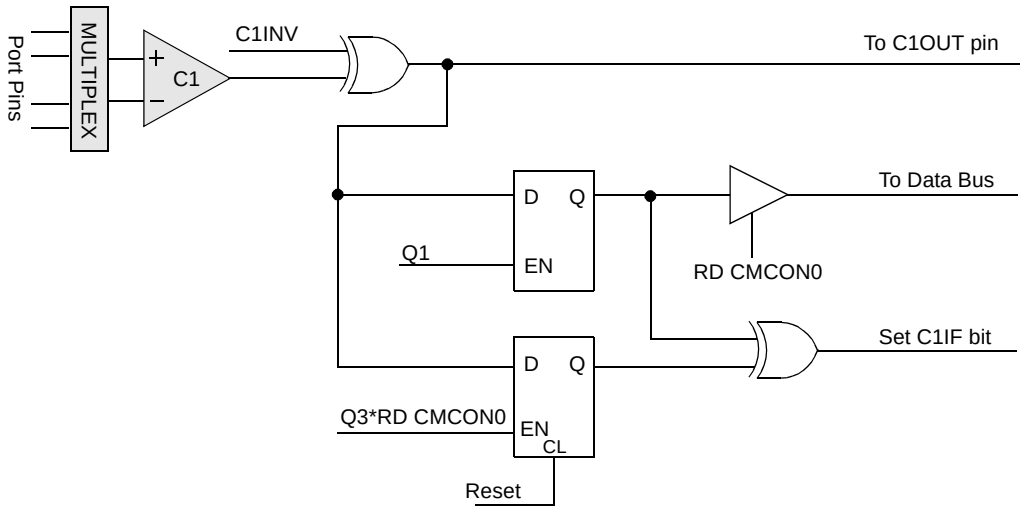

Note 1: Q1 and Q3 are phases of the four-phase system clock (FOSC).
2: Q1 is held high during Sleep mode.

FIGURE 7-4: COMPARATOR C2 OUTPUT BLOCK DIAGRAM (PIC16F636/639)

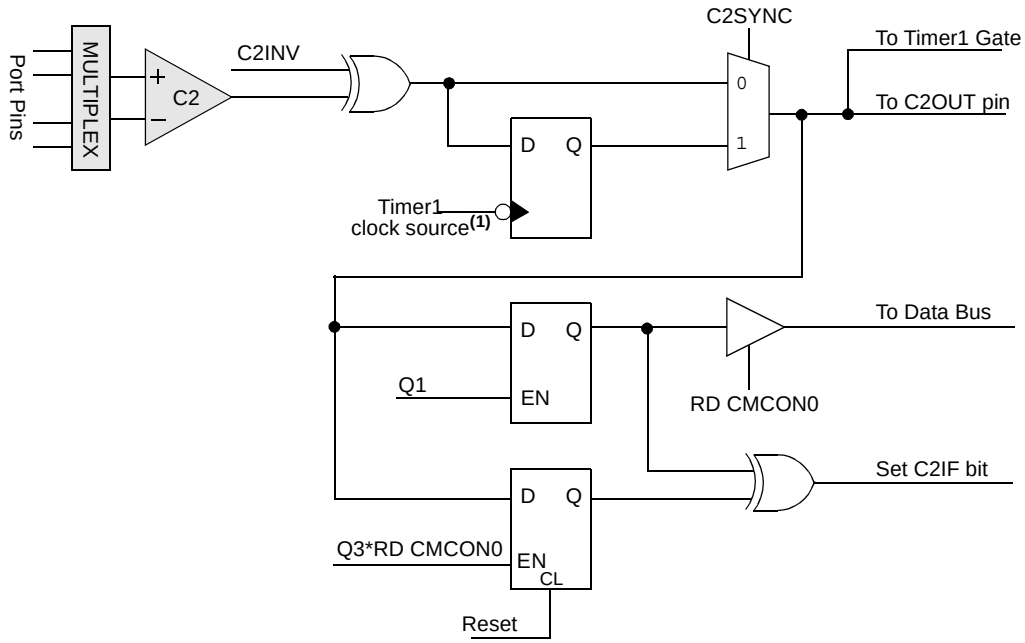

Note 1: Comparator output is latched on falling edge of Timer1 clock source.
2: Q1 and Q3 are phases of the four-phase system clock (FOSC).
3: Q1 is held high during Sleep mode.

© 2007 Microchip Technology Inc.

7.2 Analog Input Connection Considerations

A simplified circuit for an analog input is shown in Figure 7-5. Since the analog input pins share their connection with a digital input, they have reverse biased ESD protection diodes to VDD and VSS. The analog input, therefore, must be between VSS and VDD. If the input voltage deviates from this range by more than 0.6V in either direction, one of the diodes is forward biased and a latch-up may occur.

A maximum source impedance of 10 kΩ is recommended for the analog sources. Also, any external component connected to an analog input pin, such as a capacitor or a Zener diode, should have very little leakage current to minimize inaccuracies introduced.

Note 1: When reading a PORT register, all pins configured as analog inputs will read as a '0'. Pins configured as digital inputs will convert as an analog input, according to the input specification.

2: Analog levels on any pin defined as a digital input, may cause the input buffer to consume more current than is specified.

FIGURE 7-5: ANALOG INPUT MODEL

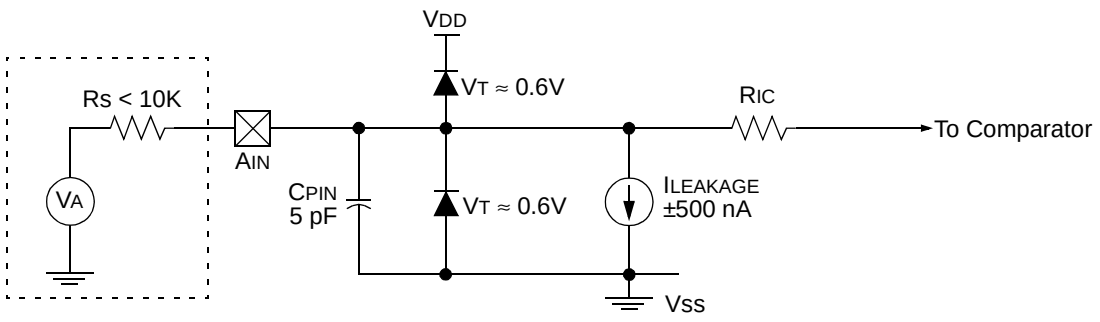

Legend:
CPIN = Input Capacitance
ILEAKAGE = Leakage Current at the pin due to various junctions
RIC = Interconnect Resistance
RS = Source Impedance
VA = Analog Voltage
VT = Threshold Voltage

7.3 Comparator Configuration

There are eight modes of operation for the comparator. The CM<2:0> bits of the CMCON0 register are used to select these modes as shown in Figures 7-6 and 7-7. I/O lines change as a function of the mode and are designed as follows:

- Analog function (A): digital input buffer is disabled
- Digital function (D): comparator digital output, overrides port function
- Normal port function (I/O): independent of comparator

The port pins denoted as “A” will read as a ‘0’ regardless of the state of the I/O pin or the I/O control TRIS bit. Pins used as analog inputs should also have the corresponding TRIS bit set to ‘1’ to disable the digital output driver. Pins denoted as “D” should have the corresponding TRIS bit set to ‘0’ to enable the digital output driver.

Note:	Comparator interrupts should be disabled during a Comparator mode change to prevent unintended interrupts.

FIGURE 7-6: COMPARATOR I/O OPERATING MODES (PIC12F635)

Comparator Reset (POR Default Value – low power)
CM<2:0> = 000

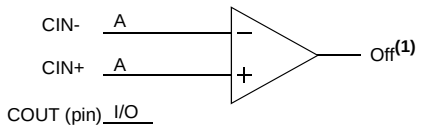

Comparator w/o Output and with Internal Reference
CM<2:0> = 100

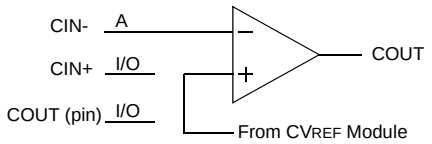

Comparator with Output
CM<2:0> = 001

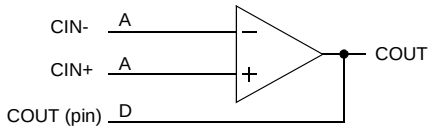

Multiplexed Input with Internal Reference and Output
CM<2:0> = 101

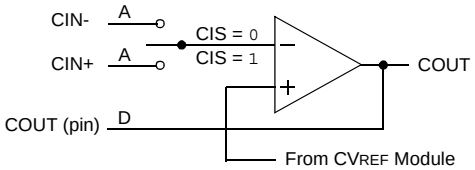

Comparator without Output
CM<2:0> = 010

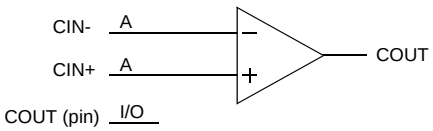

Multiplexed Input with Internal Reference
CM<2:0> = 110

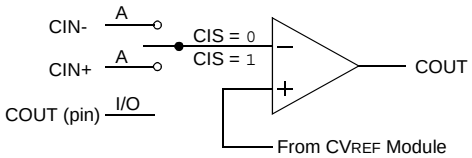

Comparator with Output and Internal Reference
CM<2:0> = 011

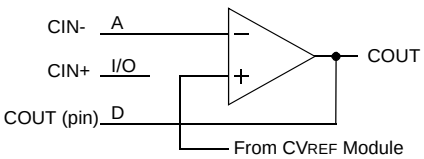

Comparator Off (Lowest power)
CM<2:0> = 111

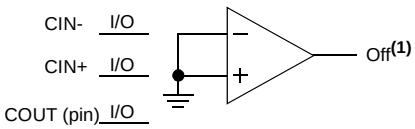

Legend: A = Analog Input, ports always reads ‘0’
I/O = Normal port I/O
CIS = Comparator Input Switch (CMCON0<3>)
D = Comparator Digital Output

Note 1: Reads as ‘0’, unless CINV = 1.

© 2007 Microchip Technology Inc.

FIGURE 7-7: COMPARATOR I/O OPERATING MODES (PIC16F636/639)

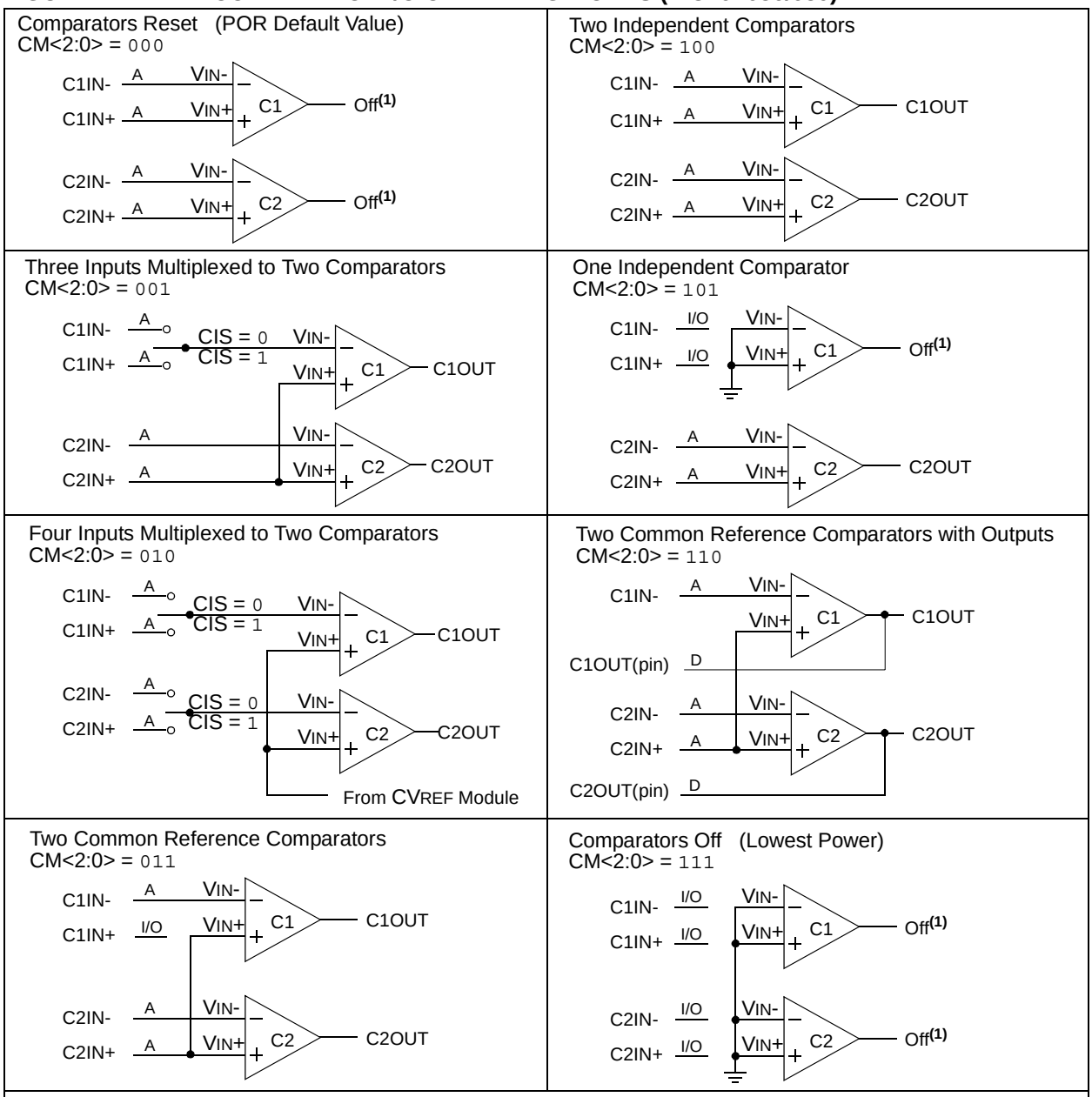

Legend: A = Analog Input, ports always reads '0'
I/O = Normal port I/O
CIS = Comparator Input Switch (CMCON0<3>)
D = Comparator Digital Output

Note 1: Reads as '0', unless CxINV = 1.

7.4 Comparator Control

The CMCON0 register (Register 7-1) provides access to the following comparator features:

- Mode selection
- Output state
- Output polarity
- Input switch

7.4.1 COMPARATOR OUTPUT STATE

Each comparator state can always be read internally via the CxOUT bit of the CMCON0 register. The comparator state may also be directed to the CxOUT pin in the following modes:

PIC12F635

- CM<2:0> = `001`
- CM<2:0> = `011`
- CM<2:0> = `101`

PIC16F636/639

- CM<2:0> = `110`

When one of the above modes is selected, the associated TRIS bit of the CxOUT pin must be cleared.

7.4.2 COMPARATOR OUTPUT POLARITY

Inverting the output of a comparator is functionally equivalent to swapping the comparator inputs. The polarity of a comparator output can be inverted by setting the CxINV bit of the CMCON0 register. Clearing CxINV results in a non-inverted output. A complete table showing the output state versus input conditions and the polarity bit is shown in Table 7-1.

TABLE 7-1: OUTPUT STATE VS. INPUT CONDITIONS

Input Conditions	CxINV	CxOUT
$V_{IN-} > V_{IN+}$	0	0
$V_{IN-} < V_{IN+}$	0	1
$V_{IN-} > V_{IN+}$	1	1
$V_{IN-} < V_{IN+}$	1	0

Note: CxOUT refers to both the register bit and output pin.

7.4.3 COMPARATOR INPUT SWITCH

The inverting input of the comparators may be switched between two analog pins in the following modes:

PIC12F635

- CM<2:0> = `101`
- CM<2:0> = `110`

PIC16F636/639

- CM<2:0> = `001` (Comparator C1 only)
- CM<2:0> = `010` (Comparators C1 and C2)

In the above modes, both pins remain in Analog mode regardless of which pin is selected as the input. The CIS bit of the CMCON0 register controls the comparator input switch.

© 2007 Microchip Technology Inc.

7.5 Comparator Response Time

The comparator output is indeterminate for a period of time after the change of an input source or the selection of a new reference voltage. This period is referred to as the response time. The response time of the comparator differs from the settling time of the voltage reference. Therefore, both of these times must be considered when determining the total response time to a comparator input change. See the Comparator and Voltage Specifications in **Section 15.0 "Electrical Specifications"** for more details.

7.6 Comparator Interrupt Operation

The comparator interrupt flag is set whenever there is a change in the output value of the comparator. Changes are recognized by means of a mismatch circuit which consists of two latches and an exclusive-or gate (see Figures 7-8 and 7-9). One latch is updated with the comparator output level when the CMCON0 register is read. This latch retains the value until the next read of the CMCON0 register or the occurrence of a Reset. The other latch of the mismatch circuit is updated on every Q1 system clock. A mismatch condition will occur when a comparator output change is clocked through the second latch on the Q1 clock cycle. The mismatch condition will persist, holding the CxIF bit of the PIR1 register true, until either the CMCON0 register is read or the comparator output returns to the previous state.

Note:	A write operation to the CMCON0 register will also clear the mismatch condition because all writes include a read operation at the beginning of the write cycle.

Software will need to maintain information about the status of the comparator output to determine the actual change that has occurred.

The CxIF bit of the PIR1 register, is the comparator interrupt flag. This bit must be reset in software by clearing it to '0'. Since it is also possible to write a '1' to this register, a simulated interrupt may be initiated.

The CxIE bit of the PIE1 register and the PEIE and GIE bits of the INTCON register must all be set to enable comparator interrupts. If any of these bits are cleared, the interrupt is not enabled, although the CxIF bit of the PIR1 register will still be set if an interrupt condition occurs.

The user, in the Interrupt Service Routine, can clear the interrupt in the following manner:

a) Any read or write of CMCON0. This will end the mismatch condition. See Figures 7-8 and 7-9.
b) Clear the CxIF interrupt flag.

A persistent mismatch condition will preclude clearing the CxIF interrupt flag. Reading CMCON0 will end the mismatch condition and allow the CxIF bit to be cleared.

Note:	If a change in the CMCON0 register (CxOUT) should occur when a read operation is being executed (start of the Q2 cycle), then the CxIF interrupt flag may not get set.

FIGURE 7-8: COMPARATOR INTERRUPT TIMING W/O CMCON0 READ

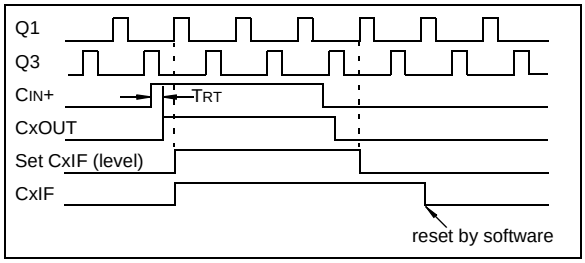

FIGURE 7-9: COMPARATOR INTERRUPT TIMING WITH CMCON0 READ

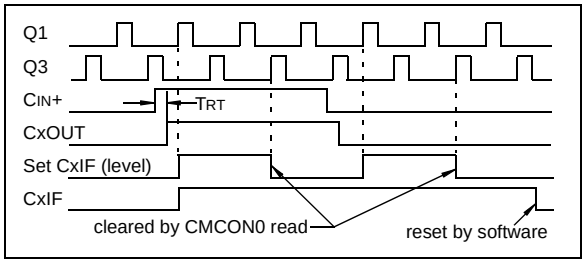

Note 1: If a change in the CMCON0 register (CxOUT) should occur when a read operation is being executed (start of the Q2 cycle), then the CxIF of the PIR1 register interrupt flag may not get set.

2: When either comparator is first enabled, bias circuitry in the Comparator module may cause an invalid output from the comparator until the bias circuitry is stable. Allow about 1 µs for bias settling then clear the mismatch condition and interrupt flags before enabling comparator interrupts.

© 2007 Microchip Technology Inc.

7.7 Operation During Sleep

The comparator, if enabled before entering Sleep mode, remains active during Sleep. The additional current consumed by the comparator is shown separately in the **Section 15.0 "Electrical Specifications"**. If the comparator is not used to wake the device, power consumption can be minimized while in Sleep mode by turning off the comparator. The comparator is turned off by selecting mode CM<2:0> = `000` or CM<2:0> = `111` of the CMCON0 register.

A change to the comparator output can wake-up the device from Sleep. To enable the comparator to wake the device from Sleep, the CxIE bit of the PIE1 register and the PEIE bit of the INTCON register must be set. The instruction following the Sleep instruction always executes following a wake from Sleep. If the GIE bit of the INTCON register is also set, the device will then execute the Interrupt Service Routine.

7.8 Effects of a Reset

A device Reset forces the CMCON0 and CMCON1 registers to their Reset states. This forces the Comparator module to be in the Comparator Reset mode (CM<2:0> = `000`). Thus, all comparator inputs are analog inputs with the comparator disabled to consume the smallest current possible.

REGISTER 7-1: CMCON0: COMPARATOR CONFIGURATION REGISTER (PIC12F635)

U-0	R-0	U-0	R/W-0	R/W-0	R/W-0	R/W-0	R/W-0
—	COUT	—	CINV	CIS	CM2	CM1	CM0
bit 7							bit 0

Legend:			
R = Readable bit	W = Writable bit	U = Unimplemented bit, read as '0'	
-n = Value at POR	'1' = Bit is set	'0' = Bit is cleared	x = Bit is unknown

bit 7 **Unimplemented:** Read as '`0`'

bit 6 **COUT:** Comparator Output bit
When CINV = `0`:
`1` = $V_{IN+} > V_{IN-}$
`0` = $V_{IN+} < V_{IN-}$
When CINV = `1`:
`1` = $V_{IN+} < V_{IN-}$
`0` = $V_{IN+} > V_{IN-}$

bit 5 **Unimplemented:** Read as '`0`'

bit 4 **CINV:** Comparator Output Inversion bit
`1` = Output inverted
`0` = Output not inverted

bit 3 **CIS:** Comparator Input Switch bit
When CM<2:0> = `110` or `101`:
`1` = CIN+ connects to V_{IN-}
`0` = CIN- connects to V_{IN-}
When CM<2:0> = `0xx` or `100` or `111`:
CIS has no effect.

bit 2-0 **CM<2:0>:** Comparator Mode bits (See Figure 7-5)
`000` = CIN pins are configured as analog, COUT pin configured as I/O, Comparator output turned off
`001` = CIN pins are configured as analog, COUT pin configured as Comparator output
`010` = CIN pins are configured as analog, COUT pin configured as I/O, Comparator output available internally
`011` = CIN- pin is configured as analog, CIN+ pin is configured as I/O, COUT pin configured as Comparator output, CV_{REF} is non-inverting input
`100` = CIN- pin is configured as analog, CIN+ pin is configured as I/O, COUT pin is configured as I/O, Comparator output available internally, CV_{REF} is non-inverting input
`101` = CIN pins are configured as analog and multiplexed, COUT pin is configured as Comparator output, CV_{REF} is non-inverting input
`110` = CIN pins are configured as analog and multiplexed, COUT pin is configured as I/O, Comparator output available internally, CV_{REF} is non-inverting input
`111` = CIN pins are configured as I/O, COUT pin is configured as I/O, Comparator output disabled, Comparator off.

REGISTER 7-2: CMCON0: COMPARATOR CONFIGURATION REGISTER (PIC16F636/639)

R-0	R-0	R/W-0	R/W-0	R/W-0	R/W-0	R/W-0	R/W-0
C2OUT	C1OUT	C2INV	C1INV	CIS	CM2	CM1	CM0
bit 7							bit 0

Legend:			
R = Readable bit	W = Writable bit	U = Unimplemented bit, read as ‘0’	
-n = Value at POR	‘1’ = Bit is set	‘0’ = Bit is cleared	x = Bit is unknown

bit 7 **C2OUT:** Comparator 2 Output bit
When C2INV = 0:
1 = C2 V_{IN+} > C2 V_{IN-}
0 = C2 V_{IN+} < C2 V_{IN-}
When C2INV = 1:
1 = C2 V_{IN+} < C2 V_{IN-}
0 = C2 V_{IN+} > C2 V_{IN-}

bit 6 **C1OUT:** Comparator 1 Output bit
When C1INV = 0:
1 = C1 V_{IN+} > C1 V_{IN-}
0 = C1 V_{IN+} < C1 V_{IN-}
When C1INV = 1:
1 = C1 V_{IN+} < C1 V_{IN-}
0 = C1 V_{IN+} > C1 V_{IN-}

bit 5 **C2INV:** Comparator 2 Output Inversion bit
1 = C2 output inverted
0 = C2 output not inverted

bit 4 **C1INV:** Comparator 1 Output Inversion bit
1 = C1 Output inverted
0 = C1 Output not inverted

bit 3 **CIS:** Comparator Input Switch bit
When CM<2:0> = 010:
1 = C1IN+ connects to C1 V_{IN-}
C2IN+ connects to C2 V_{IN-}
0 = C1IN- connects to C1 V_{IN-}
C2IN- connects to C2 V_{IN-}
When CM<2:0> = 001:
1 = C1IN+ connects to C1 V_{IN-}
0 = C1IN- connects to C1 V_{IN-}

bit 2-0 **CM<2:0>:** Comparator Mode bits (See Figure 7-5)
000 = Comparators off. CxIN pins are configured as analog
001 = Three inputs multiplexed to two comparators
010 = Four inputs multiplexed to two comparators
011 = Two common reference comparators
100 = Two independent comparators
101 = One independent comparator
110 = Two comparators with outputs and common reference
111 = Comparators off. CxIN pins are configured as digital I/O

© 2007 Microchip Technology Inc.

7.9 Comparator Gating Timer1

This feature can be used to time the duration or interval of analog events. Clearing the T1GSS bit of the CMCON1 register will enable Timer1 to increment based on the output of the comparator (or Comparator C2 for PIC16F636/639). This requires that Timer1 is on and gating is enabled. See **Section 6.0 "Timer1 Module with Gate Control"** for details.

It is recommended to synchronize the comparator with Timer1 by setting the CxSYNC bit when the comparator is used as the Timer1 gate source. This ensures Timer1 does not miss an increment if the comparator changes during an increment.

Note:	References to the comparator in this section specifically are referring to Comparator C2 on the PIC16F636/639.

7.10 Synchronizing Comparator Output to Timer1

The comparator (or Comparator C2 for PIC16F636/639) output can be synchronized with Timer1 by setting the CxSYNC bit of the CMCON1 register. When enabled, the comparator output is latched on the falling edge of the Timer1 clock source. If a prescaler is used with Timer1, the comparator output is latched after the prescaling function. To prevent a race condition, the comparator output is latched on the falling edge of the Timer1 clock source and Timer1 increments on the rising edge of its clock source. See the Comparator Block Diagram (Figure 7-2) and the Timer1 Block Diagram (Figure 6-1) for more information.

Note:	References to the comparator in this section specifically are referring to Comparator C2 on the PIC16F636/639.

REGISTER 7-3: CMCON1: COMPARATOR CONFIGURATION REGISTER (PIC12F635)

U-0	U-0	U-0	U-0	U-0	U-0	R/W-1	R/W-0
—	—	—	—	—	—	T1GSS	CMSYNC
bit 7							bit 0

Legend:			
R = Readable bit	W = Writable bit	U = Unimplemented bit, read as ‘0’	
-n = Value at POR	‘1’ = Bit is set	‘0’ = Bit is cleared	x = Bit is unknown

bit 7-2 **Unimplemented:** Read as ‘0’

bit 1 **T1GSS:** Timer1 Gate Source Select bit(1)
1 = Timer1 Gate Source is $\overline{\text{T1G}}$ pin (pin should be configured as digital input)
0 = Timer1 Gate Source is comparator output

bit 0 **CMSYNC:** Comparator Output Synchronization bit(2)
1 = Output is synchronized with falling edge of Timer1 clock
0 = Output is asynchronous

Note 1: Refer to **Section 6.6 “Timer1 Gate”**.
2: Refer to Figure 7-2.

REGISTER 7-4: CMCON1: COMPARATOR CONFIGURATION REGISTER (PIC16F636/639)

U-0	U-0	U-0	U-0	U-0	U-0	R/W-1	R/W-0
—	—	—	—	—	—	T1GSS	C2SYNC
bit 7							bit 0

Legend:			
R = Readable bit	W = Writable bit	U = Unimplemented bit, read as ‘0’	
-n = Value at POR	‘1’ = Bit is set	‘0’ = Bit is cleared	x = Bit is unknown

bit 7-2 **Unimplemented:** Read as ‘0’

bit 1 **T1GSS:** Timer1 Gate Source Select bit(1)
1 = Timer1 gate source is $\overline{\text{T1G}}$ pin (pin should be configured as digital input)
0 = Timer1 gate source is Comparator C2 output

bit 0 **C2SYNC:** Comparator C2 Output Synchronization bit(2)
1 = Output is synchronized with falling edge of Timer1 clock
0 = Output is asynchronous

Note 1: Refer to **Section 6.6 “Timer1 Gate”**.
2: Refer to Figure 7-4.

© 2007 Microchip Technology Inc.

7.11 Comparator Voltage Reference

The Comparator Voltage Reference module provides an internally generated voltage reference for the comparators. The following features are available:

- Independent from Comparator operation
- Two 16-level voltage ranges
- Output clamped to VSS
- Ratiometric with VDD
- Fixed Voltage Reference

The VRCON register (Register 7-5) controls the Voltage Reference module shown in Figure 7-10.

7.11.1 INDEPENDENT OPERATION

The comparator voltage reference is independent of the comparator configuration. Setting the VREN bit of the VRCON register will enable the voltage reference.

7.11.2 OUTPUT VOLTAGE SELECTION

The CVREF voltage reference has 2 ranges with 16 voltage levels in each range. Range selection is controlled by the VRR bit of the VRCON register. The 16 levels are set with the VR<3:0> bits of the VRCON register.

The CVREF output voltage is determined by the following equations:

EQUATION 7-1: CVREF OUTPUT VOLTAGE (INTERNAL CVREF)

$$V_{RR} = 1 \text{ (low range):}$$
$$CV_{REF} = (VR<3:0>/24) \times V_{DD}$$
$$V_{RR} = 0 \text{ (high range):}$$
$$CV_{REF} = (V_{DD}/4) + (VR<3:0> \times V_{DD}/32)$$

EQUATION 7-2: CVREF OUTPUT VOLTAGE (EXTERNAL CVREF)

$$V_{RR} = 1 \text{ (low range):}$$
$$CV_{REF} = (VR<3:0>/24) \times V_{LADDER}$$
$$V_{RR} = 0 \text{ (high range):}$$
$$CV_{REF} = (V_{LADDER}/4) + (VR<3:0> \times V_{LADDER}/32)$$
$$V_{LADDER} = V_{DD} \text{ or } ([V_{REF}+] - [V_{REF}-]) \text{ or } V_{REF}+$$

The full range of VSS to VDD cannot be realized due to the construction of the module. See Figure 7-10.

7.11.3 OUTPUT CLAMPED TO VSS

The CVREF output voltage can be set to Vss with no power consumption by configuring VRCON as follows:

- VREN = 0
- VRR = 1
- VR<3:0> = 0000

This allows the comparator to detect a zero-crossing while not consuming additional CVREF module current.

7.11.4 OUTPUT RATIOMETRIC TO VDD

The comparator voltage reference is VDD derived and therefore, the CVREF output changes with fluctuations in VDD. The tested absolute accuracy of the Comparator Voltage Reference can be found in **Section 15.0 “Electrical Specifications”**.

REGISTER 7-5: VRCON: VOLTAGE REFERENCE CONTROL REGISTER

R/W-0	U-0	R/W-0	U-0	R/W-0	R/W-0	R/W-0	R/W-0
VREN	—	VRR	—	VR3	VR2	VR1	VR0
bit 7							bit 0

Legend:			
R = Readable bit	W = Writable bit	U = Unimplemented bit, read as ‘0’	
-n = Value at POR	‘1’ = Bit is set	‘0’ = Bit is cleared	x = Bit is unknown

bit 7 **VREN:** CVREF Enable bit
1 = CVREF circuit powered on
0 = CVREF circuit powered down, no IDD drain and CVREF = VSS.

bit 6 **Unimplemented:** Read as ‘0’

bit 5 **VRR:** CVREF Range Selection bit
1 = Low range
0 = High range

bit 4 **Unimplemented:** Read as ‘0’

bit 3-0 **VR<3:0>:** CVREF Value Selection bits (0 ≤ VR<3:0> ≤ 15)
When VRR = 1: CVREF = (VR<3:0>/24) * VDD
When VRR = 0: CVREF = VDD/4 + (VR<3:0>/32) * VDD

FIGURE 7-10: COMPARATOR VOLTAGE REFERENCE BLOCK DIAGRAM

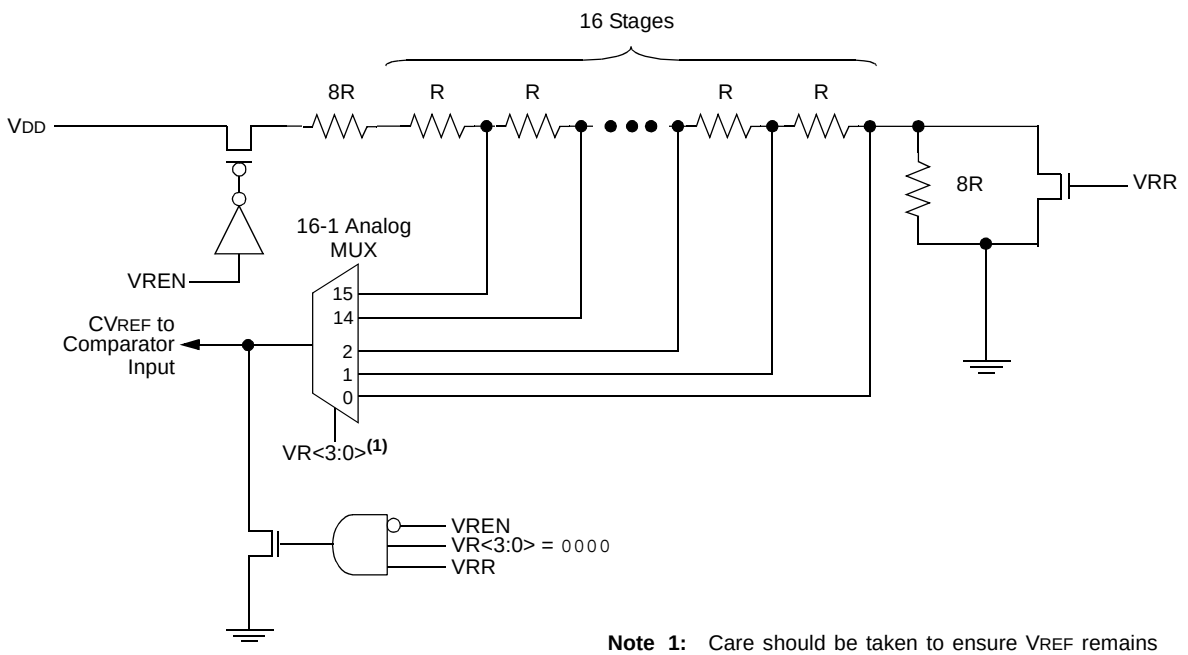

Note 1: Care should be taken to ensure VREF remains within the comparator common mode input range. See **Section 15.0 “Electrical Specifications”** for more detail.

© 2007 Microchip Technology Inc.

TABLE 7-2: SUMMARY OF REGISTERS ASSOCIATED WITH THE COMPARATOR AND VOLTAGE REFERENCE MODULES

Name	Bit 7	Bit 6	Bit 5	Bit 4	Bit 3	Bit 2	Bit 1	Bit 0	Value on POR, BOR	Value on all other Resets
CMCON0	—	COUT	—	CINV	CIS	CM2	CM1	CM0	-0-0 0000	-0-0 0000
CMCON1	—	—	—	—	—	—	T1GSS	CMSYNC	---- --10	---- --10
INTCON	GIE	PEIE	T0IE	INTE	RAIE	T0IF	INTF	RAIF	0000 000x	0000 000x
PIE1	EEIE	LVDIE	CRIE	—	C1IE	OSFIE	—	TMR1IE	000- 00-0	000- 00-0
PIR1	EEIF	LVDIF	CRIF	—	C1IF	OSFIF	—	TMR1IF	000- 00-0	000- 00-0
PORTA	—	—	RA5	RA4	RA3	RA2	RA1	RA0	--xx xxxx	--uu uuuu
PORTC	—	—	RC5	RC4	RC3	RC2	RC1	RC0	--xx xxxx	--uu uuuu
TRISA	—	—	TRISA5	TRISA4	TRISA3	TRISA2	TRISA1	TRISA0	--11 1111	--11 1111
TRISC	—	—	TRISC5	TRISC4	TRISC3	TRISC2	TRISC1	TRISC0	--11 1111	--11 1111
VRCON	VREN	—	VRR	—	VR3	VR2	VR1	VR0	0-0- 0000	0-0- 0000

Legend: x = unknown, u = unchanged, - = unimplemented, read as '0'. Shaded cells are not used for comparator.

NOTES:

© 2007 Microchip Technology Inc.

8.0 PROGRAMMABLE LOW-VOLTAGE DETECT (PLVD) MODULE

The Programmable Low-Voltage Detect (PLVD) module is a power supply detector which monitors the internal power supply. This module is typically used in key fobs and other devices, where certain actions need to be taken as a result of a falling battery voltage.

The PLVD module includes the following capabilities:

- Eight programmable trip points
- Interrupt on falling VDD
- Stable reference indication
- Operation during Sleep

A Block diagram of the PLVD module is shown in Figure 8-1.

FIGURE 8-1: PLVD BLOCK DIAGRAM

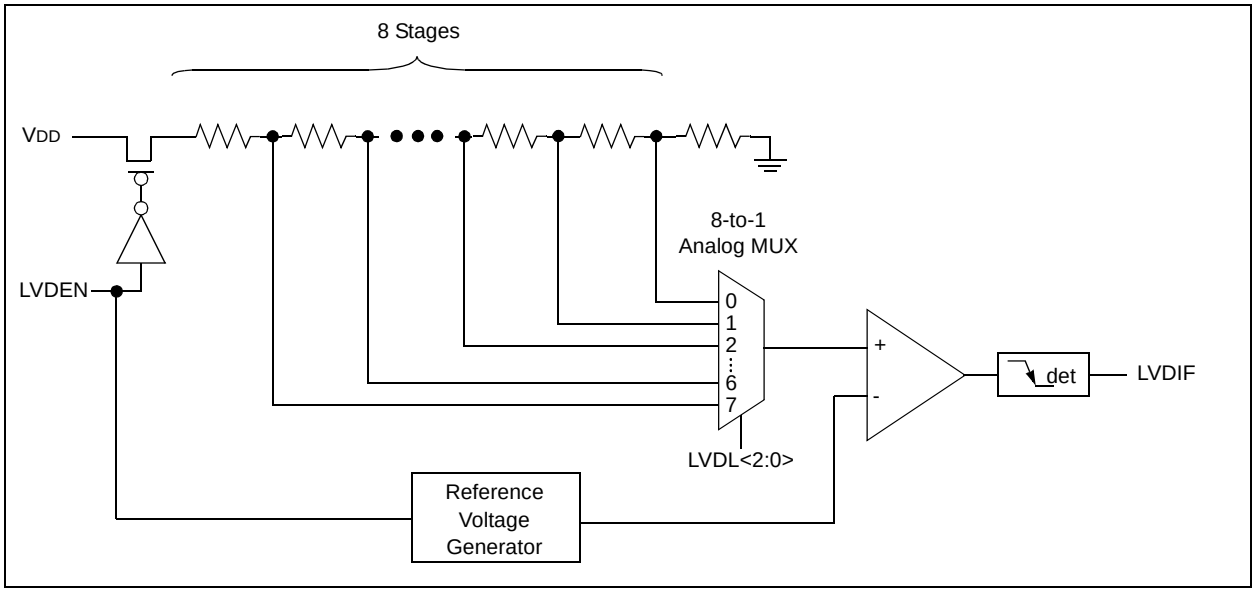

FIGURE 8-2: PLVD OPERATION

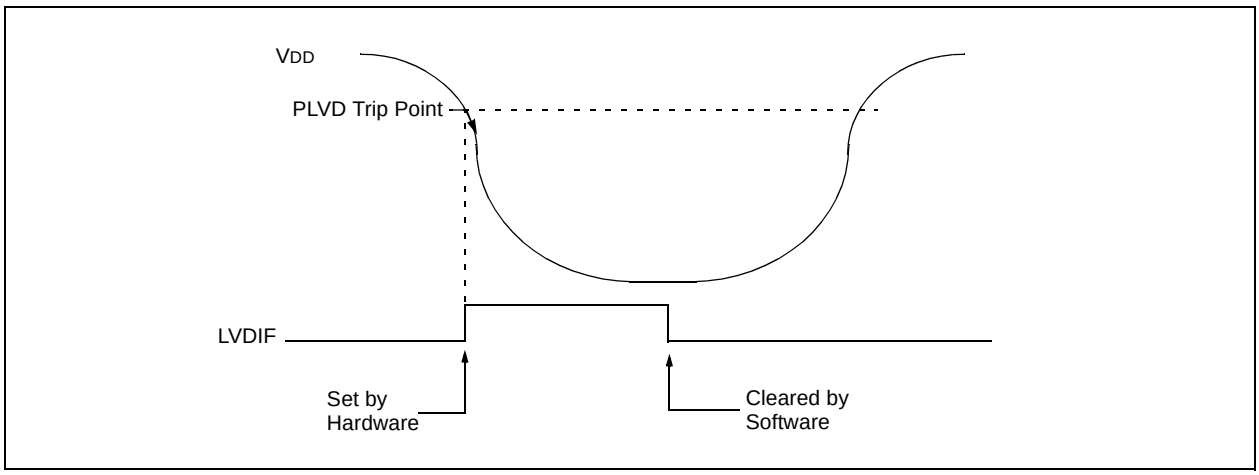

8.1 PLVD Operation

To setup the PLVD for operation, the following steps must be taken:

- Enable the module by setting the LVDEN bit of the LVDCON register.
- Configure the trip point by setting the LVDL<2:0> bits of the LVDCON register.
- Wait for the reference voltage to become stable. Refer to **Section 8.4 "Stable Reference Indication"**.
- Clear the LVDIF bit of the PIR**x** register.

The LVDIF bit will be set when VDD falls below the PLVD trip point. The LVDIF bit remains set until cleared by software. Refer to Figure 8-2.

8.2 Programmable Trip Point

The PLVD trip point is selectable from one of eight voltage levels. The LVDL bits of the LVDCON register select the trip point. Refer to Register 8-1 for the available PLVD trip points.

8.3 Interrupt on Falling VDD

When VDD falls below the PLVD trip point, the falling edge detector will set the LVDIF bit. See Figure 8-2. An interrupt will be generated if the following bits are also set:

- GIE and PEIE bits of the INTCON register
- LVDIE bit of the PIE**x** register

The LVDIF bit must be cleared by software. An interrupt can be generated from a simulated PLVD event when the LVDIF bit is set by software.

8.4 Stable Reference Indication

When the PLVD module is enabled, the reference voltage must be allowed to stabilize before the PLVD will provide a valid result. Refer to ***Electrical Section, PLVD Characteristics*** for the stabilization time.

When the HFINTOSC is running, the IRVST bit of the LVDCON register indicates the stability of the voltage reference. The voltage reference is stable when the IRVST bit is set.

8.5 Operation During Sleep

To wake from Sleep, set the LVDIE bit of the PIE**x** register and the PEIE bit of the INTCON register. When the LVDIE and PEIE bits are set, the device will wake from Sleep and execute the next instruction. If the GIE bit is also set, the program will call the Interrupt Service Routine upon completion of the first instruction after waking from Sleep.

© 2007 Microchip Technology Inc.

REGISTER 8-1: LVDCON: LOW-VOLTAGE DETECT CONTROL REGISTER

U-0	U-0	R-0	R/W-0	U-0	R/W-1	R/W-0	R/W-0
—	—	IRVST(1)	LVDEN	—	LVDL2	LVDL1	LVDL0
bit 7							bit 0

Legend:			
R = Readable bit	W = Writable bit	U = Unimplemented bit, read as ‘0’	
-n = Value at POR	‘1’ = Bit is set	‘0’ = Bit is cleared	x = Bit is unknown

bit 7-6 **Unimplemented:** Read as ‘0’

bit 5 **IRVST:** Internal Reference Voltage Stable Status Flag bit(1)
1 = Indicates that the PLVD is stable and PLVD interrupt is reliable
0 = Indicates that the PLVD is not stable and PLVD interrupt must not be enabled

bit 4 **LVDEN:** Low-Voltage Detect Module Enable bit
1 = Enables PLVD Module, powers up PLVD circuit and supporting reference circuitry
0 = Disables PLVD Module, powers down PLVD circuit and supporting reference circuitry

bit 3 **Unimplemented:** Read as ‘0’

bit 2-0 **LVDL<2:0>:** Low-Voltage Detection Level bits (nominal values)
111 = 4.5V
110 = 4.2V
101 = 4.0V
100 = 2.3V (default)
011 = 2.2V
010 = 2.1V
001 = 2.0V(2)
000 = Reserved

Note 1: The IRVST bit is usable only when the HFINTOSC is running.
2: Not tested and below minimum operating conditions.

TABLE 8-1: REGISTERS ASSOCIATED WITH PROGRAMMABLE LOW-VOLTAGE DETECT

Name	Bit 7	Bit 6	Bit 5	Bit 4	Bit 3	Bit 2	Bit 1	Bit 0	Value on POR, BOR	Value on all other Resets
INTCON	GIE	PEIE	T0IE	INTE	RAIE	T0IF	INTF	RAIF	0000 000x	0000 000x
PIE1	OSFIE	C2IE	C1IE	LCDIE	—	LVDIE	—	CCP2IE	0000 -0-0	0000 -0-0
PIR1	OSFIF	C2IF	C1IF	LCDIF	—	LVDIF	—	CCP2IF	0000 -0-0	0000 -0-0
LVDCON	—	—	IRVST	LVDEN	—	LVDL2	LVDL1	LVDL0	--00 -100	--00 -100

Legend: x = unknown, - = unimplemented read as ‘0’. Shaded cells are not used by the PLVD module.

NOTES:

© 2007 Microchip Technology Inc.

9.0 DATA EEPROM MEMORY

The EEPROM data memory is readable and writable during normal operation (full VDD range). This memory is not directly mapped in the register file space. Instead, it is indirectly addressed through the Special Function Registers. There are four SFRs used to read and write this memory:

- EECON1
- EECON2 (not a physically implemented register)
- EEDAT
- EEADR

EEDAT holds the 8-bit data for read/write and EEADR holds the address of the EEPROM location being accessed. PIC16F636/639 has 256 bytes of data EEPROM and the PIC12F635 has 128 bytes.

The EEPROM data memory allows byte read and write. A byte write automatically erases the location and writes the new data (erase before write). The EEPROM data memory is rated for high erase/write cycles. The write time is controlled by an on-chip timer. The write time will vary with voltage and temperature as well as from chip-to-chip. Please refer to A/C specifications in **Section 15.0 "Electrical Specifications"** for exact limits.

When the data memory is code-protected, the CPU may continue to read and write the data EEPROM memory. The device programmer can no longer access the data EEPROM data and will read zeroes.

REGISTER 9-1: EEDAT: EEPROM DATA REGISTER

R/W-0	R/W-0	R/W-0	R/W-0	R/W-0	R/W-0	R/W-0	R/W-0
EEDAT7	EEDAT6	EEDAT5	EEDAT4	EEDAT3	EEDAT2	EEDAT1	EEDAT0
bit 7							bit 0

Legend:			
R = Readable bit	W = Writable bit	U = Unimplemented bit, read as '0'	
-n = Value at POR	'1' = Bit is set	'0' = Bit is cleared	x = Bit is unknown

bit 7-0 **EEDATn**: Byte Value to Write To or Read From Data EEPROM bits

REGISTER 9-2: EEADR: EEPROM ADDRESS REGISTER

R/W-0	R/W-0	R/W-0	R/W-0	R/W-0	R/W-0	R/W-0	R/W-0
EEADR7(1)	EEADR6	EEADR5	EEADR4	EEADR3	EEADR2	EEADR1	EEADR0
bit 7							bit 0

Legend:			
R = Readable bit	W = Writable bit	U = Unimplemented bit, read as '0'	
-n = Value at POR	'1' = Bit is set	'0' = Bit is cleared	x = Bit is unknown

bit 7-0 **EEADR**: Specifies One of 256 Locations for EEPROM Read/Write Operation bits

Note 1: PIC16F636/639 only. Read as '0' on PIC12F635.

9.1 EECON1 AND EECON2 Registers

EECON1 is the control register with four low-order bits physically implemented. The upper four bits are non-implemented and read as '0's.

Control bits RD and WR initiate read and write, respectively. These bits cannot be cleared, only set in software. They are cleared in hardware at completion of the read or write operation. The inability to clear the WR bit in software prevents the accidental, premature termination of a write operation.

The WREN bit, when set, will allow a write operation. On power-up, the WREN bit is clear. The WRERR bit is set when a write operation is interrupted by a $\overline{\text{MCLR}}$ Reset, or a WDT Time-out Reset during normal operation. In these situations, following Reset, the user can check the WRERR bit, clear it and rewrite the location. The data and address will be cleared. Therefore, the EEDAT and EEADR registers will need to be re-initialized.

Interrupt flag, EEIF bit of the PIR1 register, is set when write is complete. This bit must be cleared in software.

EECON2 is not a physical register. Reading EECON2 will read all '0's. The EECON2 register is used exclusively in the data EEPROM write sequence.

Note:	The EECON1, EEDAT and EEADR registers should not be modified during a data EEPROM write (WR bit = 1).

REGISTER 9-3: EECON1: EEPROM CONTROL REGISTER

U-0	U-0	U-0	U-0	R/W-x	R/W-0	R/S-0	R/S-0
—	—	—	—	WRERR	WREN	WR	RD
bit 7							bit 0

Legend:			
S = Bit can only be set			
R = Readable bit	W = Writable bit	U = Unimplemented bit, read as '0'	
-n = Value at POR	'1' = Bit is set	'0' = Bit is cleared	x = Bit is unknown

bit 7-4 **Unimplemented:** Read as '0'

bit 3 **WRERR:** EEPROM Error Flag bit
- 1 = A write operation is prematurely terminated (any $\overline{\text{MCLR}}$ Reset, any WDT Reset during normal operation or BOR Reset)
- 0 = The write operation completed

bit 2 **WREN:** EEPROM Write Enable bit
- 1 = Allows write cycles
- 0 = Inhibits write to the data EEPROM

bit 1 **WR:** Write Control bit
- 1 = Initiates a write cycle (The bit is cleared by hardware once write is complete. The WR bit can only be set, not cleared, in software.)
- 0 = Write cycle to the data EEPROM is complete

bit 0 **RD:** Read Control bit
- 1 = Initiates an EEPROM read (Read takes one cycle. RD is cleared in hardware. The RD bit can only be set, not cleared, in software.)
- 0 = Does not initiate an EEPROM read

© 2007 Microchip Technology Inc.

9.2 Reading the EEPROM Data Memory

To read a data memory location, the user must write the address to the EEADR register and then set control bit RD of the EECON1 register, as shown in Example 9-1. The data is available, in the very next cycle, in the EEDAT register. Therefore, it can be read in the next instruction. EEDAT holds this value until another read, or until it is written to by the user (during a write operation).

EXAMPLE 9-1: DATA EEPROM READ

```
BANKSEL  EEADR          ;
MOVLW    CONFIG_ADDR    ;
MOVWF    EEADR          ;Address to read
BSF      EECON1,RD      ;EE Read
MOVF     EEDAT,W        ;Move data to W
```

9.3 Writing to the EEPROM Data Memory

To write an EEPROM data location, the user must first write the address to the EEADR register and the data to the EEDAT register. Then the user must follow a specific sequence to initiate the write for each byte, as shown in Example 9-2.

The write will not initiate if the above sequence is not exactly followed (write 55h to EECON2, write AAh to EECON2, then set WR bit) for each byte. We strongly recommend that interrupts be disabled during this code segment. A cycle count is executed during the required sequence. Any number that is not equal to the required cycles to execute the required sequence will prevent the data from being written into the EEPROM.

Additionally, the WREN bit in EECON1 must be set to enable write. This mechanism prevents accidental writes to data EEPROM due to errant (unexpected) code execution (i.e., lost programs). The user should keep the WREN bit clear at all times, except when updating EEPROM. The WREN bit is not cleared by hardware.

After a write sequence has been initiated, clearing the WREN bit will not affect this write cycle. The WR bit will be inhibited from being set unless the WREN bit is set.

At the completion of the write cycle, the WR bit is cleared in hardware and the EE Write Complete Interrupt Flag bit (EEIF) is set. The user can either enable this interrupt or poll this bit. The EEIF bit of the PIR1 register must be cleared by software.

EXAMPLE 9-2: DATA EEPROM WRITE

```
        BANKSEL EEADR          ;
        BSF     EECON1,WREN    ;Enable write
        BCF     INTCON,GIE     ;Disable INTs
Required MOVLW  55h            ;Unlock write
Sequence MOVWF  EECON2         ;
        MOVLW   AAh            ;
        MOVWF   EECON2         ;
        BSF     EECON1,WR      ;Start the write
        BSF     INTCON,GIE     ;Enable INTS
```

9.4 Write Verify

Depending on the application, good programming practice may dictate that the value written to the data EEPROM should be verified (see Example 9-3) to the desired value to be written.

EXAMPLE 9-3: WRITE VERIFY

```
BANKSEL  EEDAT      ;
MOVF     EEDAT,W    ;EEDAT not changed
                    ;from previous write
BSF      EECON1,RD  ;YES, Read the
                    ;value written
XORWF    EEDAT,W    ;
BTFSS    STATUS,Z   ;Is data the same
GOTO     WRITE_ERR  ;No, handle error
:                   ;Yes, continue
```

9.4.1 USING THE DATA EEPROM

The data EEPROM is a high-endurance, byte addressable array that has been optimized for the storage of frequently changing information (e.g., program variables or other data that are updated often). When variables in one section change frequently, while variables in another section do not change, it is possible to exceed the total number of write cycles to the EEPROM (specification D124) without exceeding the total number of write cycles to a single byte (specifications D120 and D120A). If this is the case, then a refresh of the array must be performed. For this reason, variables that change infrequently (such as constants, IDs, calibration, etc.) should be stored in Flash program memory.

9.5 Protection Against Spurious Write

There are conditions when the user may not want to write to the data EEPROM memory. To protect against spurious EEPROM writes, various mechanisms have been built in. On power-up, WREN is cleared. Also, the Power-up Timer (nominal 64 ms duration) prevents EEPROM write.

The write initiate sequence and the WREN bit together help prevent an accidental write during:

- Brown-out
- Power Glitch
- Software Malfunction

9.6 Data EEPROM Operation During Code Protection

Data memory can be code-protected by programming the CPD bit in the Configuration Word (Register 12-1) to ‘0’.

When the data memory is code-protected, the CPU is able to read and write data to the data EEPROM. It is recommended to code-protect the program memory when code-protecting data memory. This prevents anyone from programming zeroes over the existing code (which will execute as NOPs) to reach an added routine, programmed in unused program memory, which outputs the contents of data memory. Programming unused locations in program memory to ‘0’ will also help prevent data memory code protection from becoming breached.

TABLE 9-1: SUMMARY OF REGISTERS ASSOCIATED WITH DATA EEPROM

Name	Bit 7	Bit 6	Bit 5	Bit 4	Bit 3	Bit 2	Bit 1	Bit 0	Value on POR, BOR	Value on all other Resets
INTCON	GIE	PEIE	T0IE	INTE	RAIE	T0IF	INTF	RAIF	0000 000x	0000 000x
PIR1	EEIF	LVDIF	CRIF	C2IF(1)	C1IF	OSFIF	—	TMR1IF	0000 00-0	0000 00-0
PIE1	EEIE	LVDIE	CRIE	C2IE(1)	C1IE	OSFIE	—	TMR1IE	0000 00-0	0000 00-0
EEDAT	EEDAT7	EEDAT6	EEDAT5	EEDAT4	EEDAT3	EEDAT2	EEDAT1	EEDAT0	0000 0000	0000 0000
EEADR	EEADR7(1)	EEADR6	EEADR5	EEADR4	EEADR3	EEADR2	EEADR1	EEADR0	0000 0000	0000 0000
EECON1	—	—	—	—	WRERR	WREN	WR	RD	---- x000	---- q000
EECON2	EEPROM Control Register 2 (not a physical register)								---- ----	---- ----

Legend: x = unknown, u = unchanged, – = unimplemented read as ‘0’, q = value depends upon condition.
Shaded cells are not used by the data EEPROM module.

Note 1: PIC16F636/639 only.

© 2007 Microchip Technology Inc.

10.0 KEELOQ® COMPATIBLE CRYPTOGRAPHIC MODULE

To obtain information regarding the implementation of the KEELOQ module, Microchip Technology requires the execution of the "KEELOQ® Encoder License Agreement".

The "KEELOQ® Encoder License Agreement" may be accessed through the Microchip web site located at www.microchip.com/KEELOQ. Further information may be obtained by contacting your local Microchip Sales Representative.

NOTES:

© 2007 Microchip Technology Inc.

11.0 ANALOG FRONT-END (AFE) FUNCTIONAL DESCRIPTION (PIC16F639 ONLY)

The PIC16F639 device consists of the PIC16F636 device and low frequency (LF) Analog Front-End (AFE), with the AFE section containing three analog-input channels for signal detection and LF talk-back. This section describes the Analog Front-End (AFE) in detail.

The PIC16F639 device can detect a 125 kHz input signal as low as 1 mVpp and transmit data by using internal LF talk-back modulation or via an external transmitter. The PIC16F639 can also be used for various bidirectional communication applications. Figure 11-3 and Figure 11-4 show application examples of the device.

Each analog input channel has internal tuning capacitance, sensitivity control circuits, an input signal strength limiter and an LF talk-back modulation transistor. An Automatic Gain Control (AGC) loop is used for all three input channel gains. The output of each channel is OR'd and fed into a demodulator. The digital output is passed to the LFDATA pin. Figure 11-1 shows the block diagram of the AFE and Figure 11-2 shows the LC input path.

There are a total of eight Configuration registers. Six of them are used for AFE operation options, one for column parity bits and one for status indication of AFE operation. Each register has 9 bits including one row parity bit. These registers are readable and writable by SPI (Serial Protocol Interface) commands except for the STATUS register, which is read-only.

11.1 RF Limiter

The RF Limiter limits LC pin input voltage by de-Q'ing the attached LC resonant circuit. The absolute voltage limit is defined by the silicon process's maximum allowed input voltage (see **Section 15.0 "Electrical Specifications"**). The limiter begins de-Q'ing the external LC antenna when the input voltage exceeds V_{DE_Q}, progressively de-Q'ing harder to reduce the antenna input voltage.

The signal levels from all 3 channels are combined such that the limiter attenuates all 3 channels uniformly, in respect to the channel with the strongest signal.

11.2 Modulation Circuit

The modulation circuit consists of a modulation transistor (FET), internal tuning capacitors and external LC antenna components. The modulation transistor and the internal tuning capacitors are connected between the LC input pin and LCCOM pin. Each LC input has its own modulation transistor.

When the modulation transistor turns on, its low Turn-on Resistance (R_M) clamps the induced LC antenna voltage. The coil voltage is minimized when the modulation transistor turns-on and maximized when the modulation transistor turns-off. The modulation transistor's low Turn-on Resistance (R_M) results in a high modulation depth.

The LF talk-back is achieved by turning on and off the modulation transistor.

The modulation data comes from the microcontroller section via the digital SPI interface as "Clamp On", "Clamp Off" commands. Only those inputs that are enabled will execute the clamp command. A basic block diagram of the modulation circuit is shown in Figure 11-1 and Figure 11-2.

The modulation FET is also shorted momentarily after Soft Reset and Inactivity timer time-out.

11.3 Tuning Capacitor

Each channel has internal tuning capacitors for external antenna tuning. The capacitor values are programmed by the Configuration registers up to 63 pF, 1 pF per step.

Note:	The user can control the tuning capacitor by programming the AFE Configuration registers.

11.4 Variable Attenuator

The variable attenuator is used to attenuate, via AGC control, the input signal voltage to avoid saturating the amplifiers and demodulators.

Note:	The variable attenuator function is accomplished by the device itself. The user cannot control its function.

11.5 Sensitivity Control

The sensitivity of each channel can be reduced by the channel's Configuration register sensitivity setting. This is used to desensitize the channel from optimum.

Note:	The user can desensitize the channel sensitivity by programming the AFE Configuration registers.

11.6 AGC Control

The AGC controls the variable attenuator to limit the internal signal voltage to avoid saturation of internal amplifiers and demodulators (Refer to **Section 11.4 "Variable Attenuator"**).

The signal levels from all 3 channels are combined such that AGC attenuates all 3 channels uniformly in respect to the channel with the strongest signal.

Note:	The AGC control function is accomplished by the device itself. The user cannot control its function.

11.7 Fixed Gain Amplifiers 1 and 2

FGA1 and FGA2 provides a maximum two-stage gain of 40 dB.

Note:	The user cannot control the gain of these two amplifiers.

11.8 Auto Channel Selection

The Auto Channel Selection feature is enabled if the Auto Channel Select bit AUTOCHSEL<8> in Configuration Register 5 (Register 11-6) is set, and disabled if the bit is cleared. When this feature is active (i.e., AUTOCHSE <8> = 1), the control circuit checks the demodulator output of each input channel immediately after the AGC settling time (T_{STAB}). If the output is high, it allows this channel to pass data, otherwise it is blocked.

The status of this operation is monitored by AFE Status Register 7 bits <8:6> (Register 11-8). These bits indicate the current status of the channel selection activity, and automatically updates for every Soft Reset period. The auto channel selection function resets after each Soft Reset (or after Inactivity timer time-out). Therefore, the blocked channels are reenabled after Soft Reset.

This feature can make the output signal cleaner by blocking any channel that was not high at the end of T_{AGC}. This function works only for demodulated data output, and is not applied for carrier clock or RSSI output.

11.9 Carrier Clock Detector

The Detector senses the input carrier cycles. The output of the Detector switches digitally at the signal carrier frequency. Carrier clock output is available when the output is selected by the DATOUT bit in the AFE Configuration Register 1 (Register 11-2).

11.10 Demodulator

The Demodulator consists of a full-wave rectifier, low pass filter, peak detector and Data Slicer that detects the envelope of the input signal.

11.11 Data Slicer

The Data Slicer consists of a reference generator and comparator. The Data Slicer compares the input with the reference voltage. The reference voltage comes from the minimum modulation depth requirement setting and input peak voltage. The data from all 3 channels are OR'd together and sent to the output enable filter.

11.12 Output Enable Filter

The Output Enable Filter enables the LFDATA output once the incoming signal meets the wake-up sequence requirements (see **Section 11.15 "Configurable Output Enable Filter"**).

11.13 RSSI (Received Signal Strength Indicator)

The RSSI provides a current which is proportional to the input signal amplitude (see **Section 11.31.3 "Received Signal Strength Indicator (RSSI) Output"**).

11.14 Analog Front-End Timers

The AFE has an internal 32 kHz RC oscillator. The oscillator is used in several timers:

- Inactivity timer
- Alarm timer
- Pulse Width timer
- Period timer
- AGC settling timer

11.14.1 RC OSCILLATOR

The RC oscillator is low power, 32 kHz ± 10% over temperature and voltage variations.

© 2007 Microchip Technology Inc.

11.14.2 INACTIVITY TIMER

The Inactivity Timer is used to automatically return the AFE to Standby mode, if there is no input signal. The time-out period is approximately 16 ms (TINACT), based on the 32 kHz internal clock.

The purpose of the Inactivity Timer is to minimize AFE current draw by automatically returning the AFE to the lower current Standby mode, if there is no input signal for approximately 16 ms.

The timer is reset when:

- An amplitude change in LF input signal, either high-to-low or low-to-high
- $\overline{CS}$ pin is low (any SPI command)
- Timer-related Soft Reset

The timer starts when:

- AFE receives any LF signal

The timer causes an AFE Soft Reset when:

- A previously received LF signal does not change either high-to-low or low-to-high for TINACT

The Soft Reset returns the AFE to Standby mode where most of the analog circuits, such as the AGC, demodulator and RC oscillator, are powered down. This returns the AFE to the lower Standby Current mode.

11.14.3 ALARM TIMER

The Alarm Timer is used to notify the MCU that the AFE is receiving LF signal that does not pass the output enable filter requirement. The time-out period is approximately 32 ms (TALARM) in the presence of continuing noise.

The Alarm Timer time-out occurs if there is an input signal for longer than 32 ms that does not meet the output enable filter requirements. The Alarm Timer time-out causes:

a) The $\overline{ALERT}$ pin to go low.
b) The ALARM bit to set in the AFE Status Configuration 7 register (Register 11-8).

The MCU is informed of the Alarm timer time-out by monitoring the $\overline{ALERT}$ pin. If the Alarm timer time-out occurs, the MCU can take appropriate actions such as lowering channel sensitivity or disabling channels. If the noise source is ignored, the AFE can return to a lower standby current draw state.

The timer is reset when the:

- $\overline{CS}$ pin is low (any SPI command).
- Output enable filter is disabled.
- LFDATA pin is enabled (signal passed output enable filter).

The timer starts when:

- Receiving a LF signal.

The timer causes a low output on the $\overline{ALERT}$ pin when:

- Output enable filter is enabled and modulated input signal is present for TALARM, but does not pass the output enable filter requirement.

Note:	The Alarm timer is disabled if the output enable filter is disabled.

11.14.4 PULSE WIDTH TIMER

The Pulse Width Timer is used to verify that the received output enable sequence meets both the minimum TOEH and minimum TOEL requirements.

11.14.5 PERIOD TIMER

The Period Timer is used to verify that the received output enable sequence meets the maximum TOET requirement.

11.14.6 AGC SETTLING TIMER (TAGC)

This timer is used to keep the output enable filter in Reset while the AGC settles on the input signal. The time-out period is approximately 3.5 ms. At end of this time (TAGC), the input should remain high (TPAGC), otherwise the counting is aborted and a Soft Reset is issued. See Figure 11-6 for details.

Note 1:	The AFE needs continuous and uninterrupted high input signal during AGC settling time (TAGC). Any absence of signal during this time may reset the timer and a new input signal is needed for AGC settling time, or may result in improper AGC gain settings which will produce invalid output.
2:	The rest of the AFE section wakes up if any of these input channels receive the AGC settling time correctly. AFE Status Register 7 bits <4:2> (Register 11-8) indicate which input channels have waken up the AFE first. Valid input signal on multiple input pins can cause more than one channel's indicator bit to be set.

FIGURE 11-1: FUNCTIONAL BLOCK DIAGRAM – ANALOG FRONT-END

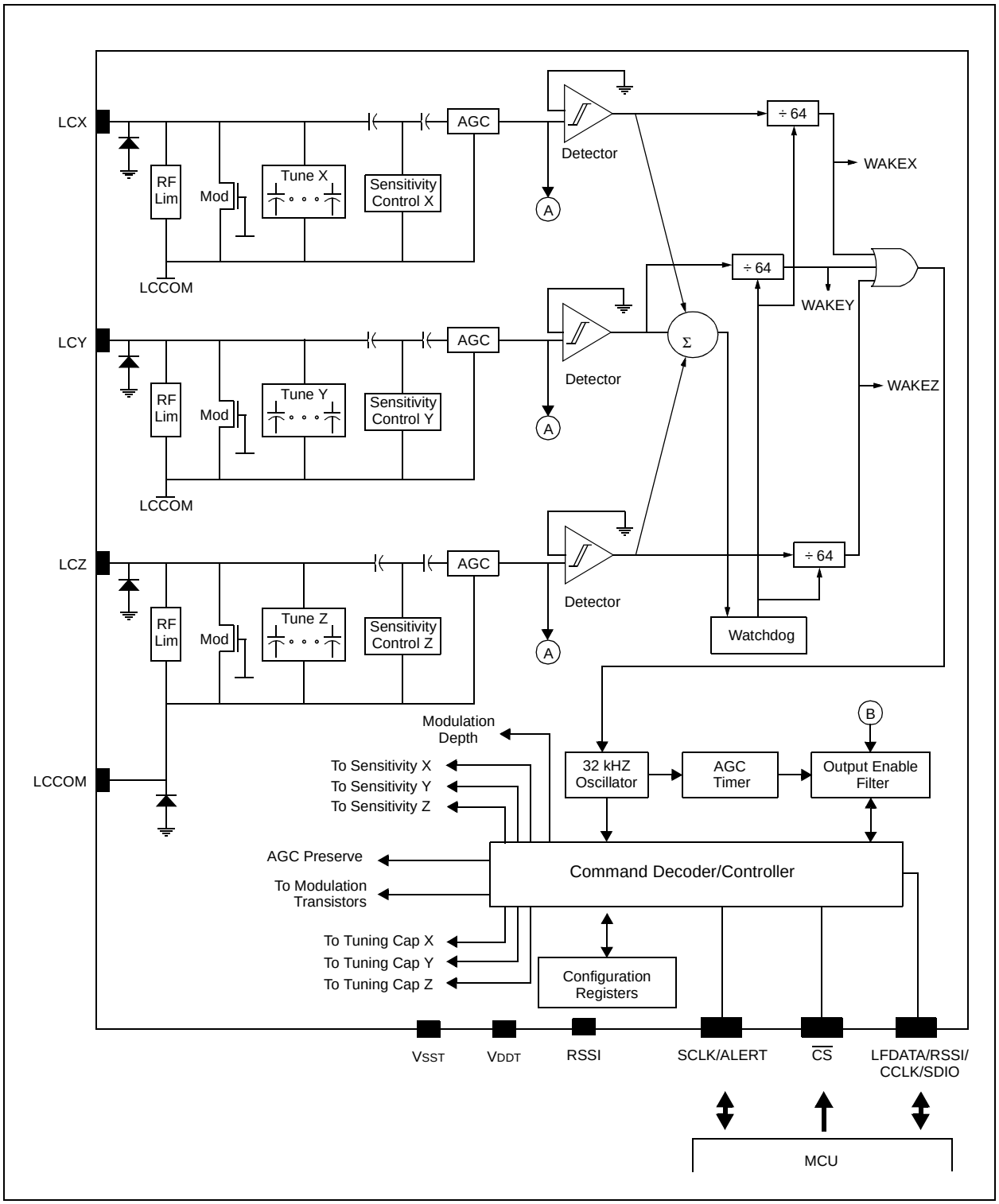

© 2007 Microchip Technology Inc.

FIGURE 11-2: LC INPUT PATH

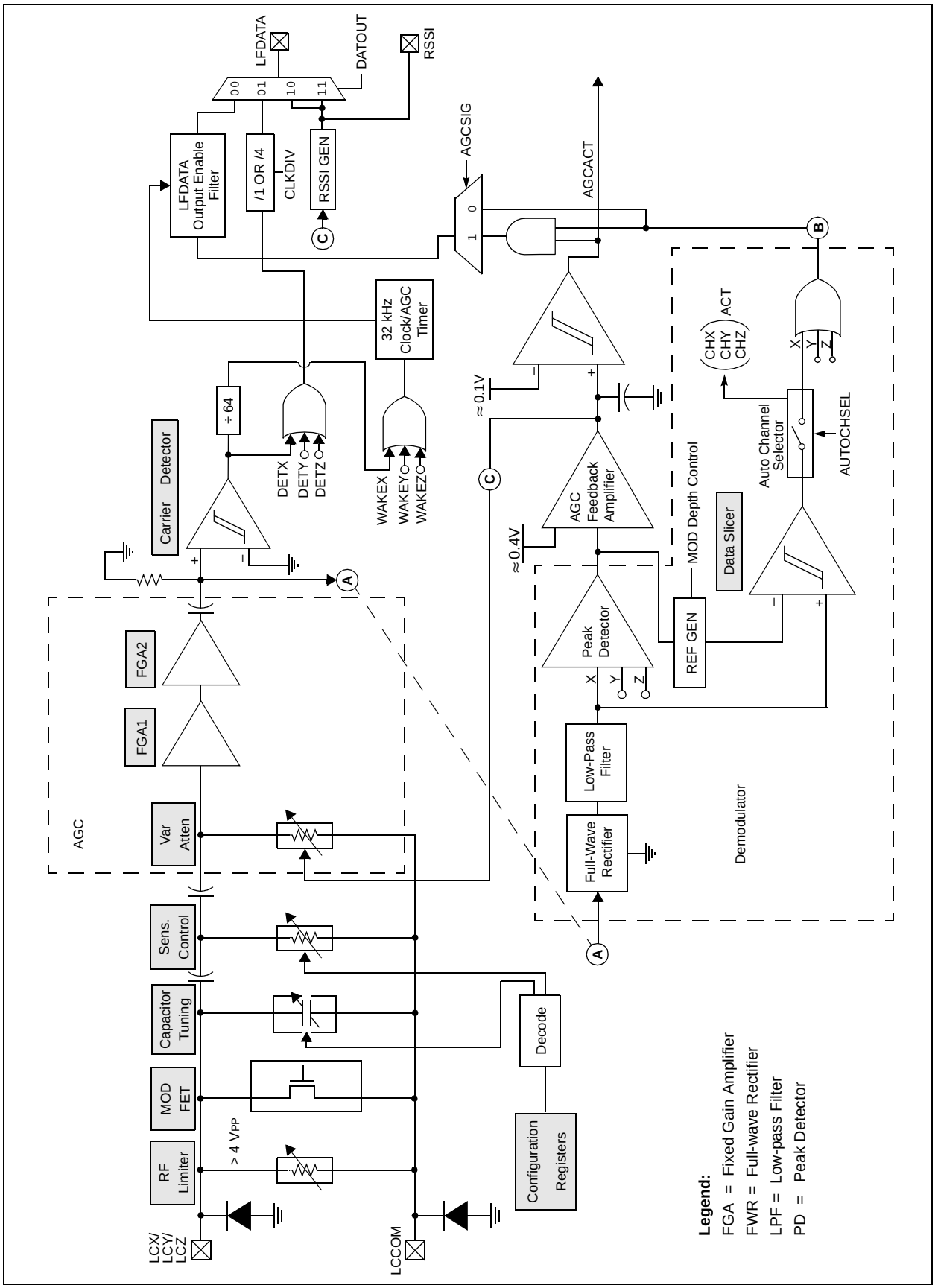

FIGURE 11-3: BIDIRECTIONAL PASSIVE KEYLESS ENTRY (PKE) SYSTEM APPLICATION EXAMPLE

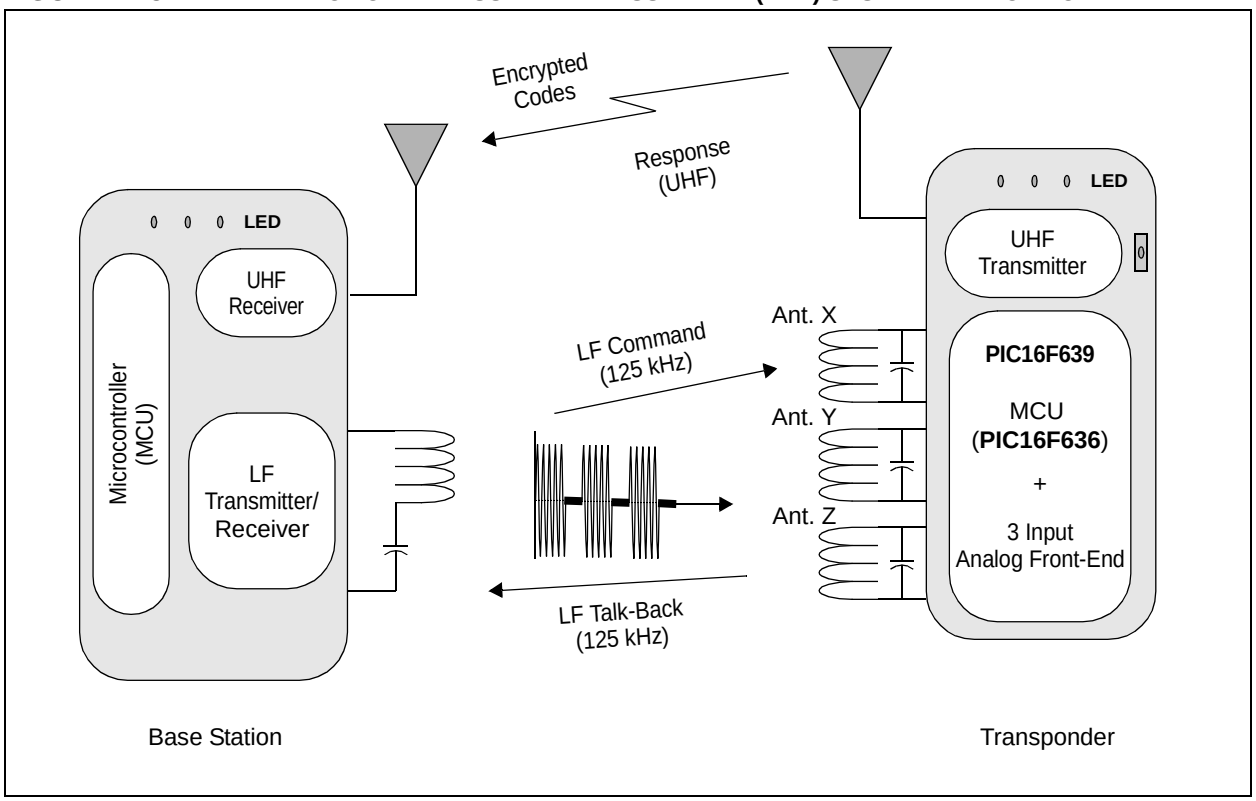

FIGURE 11-4: PASSIVE KEYLESS ENTRY (PKE) TRANSPONDER CONFIGURATION EXAMPLE

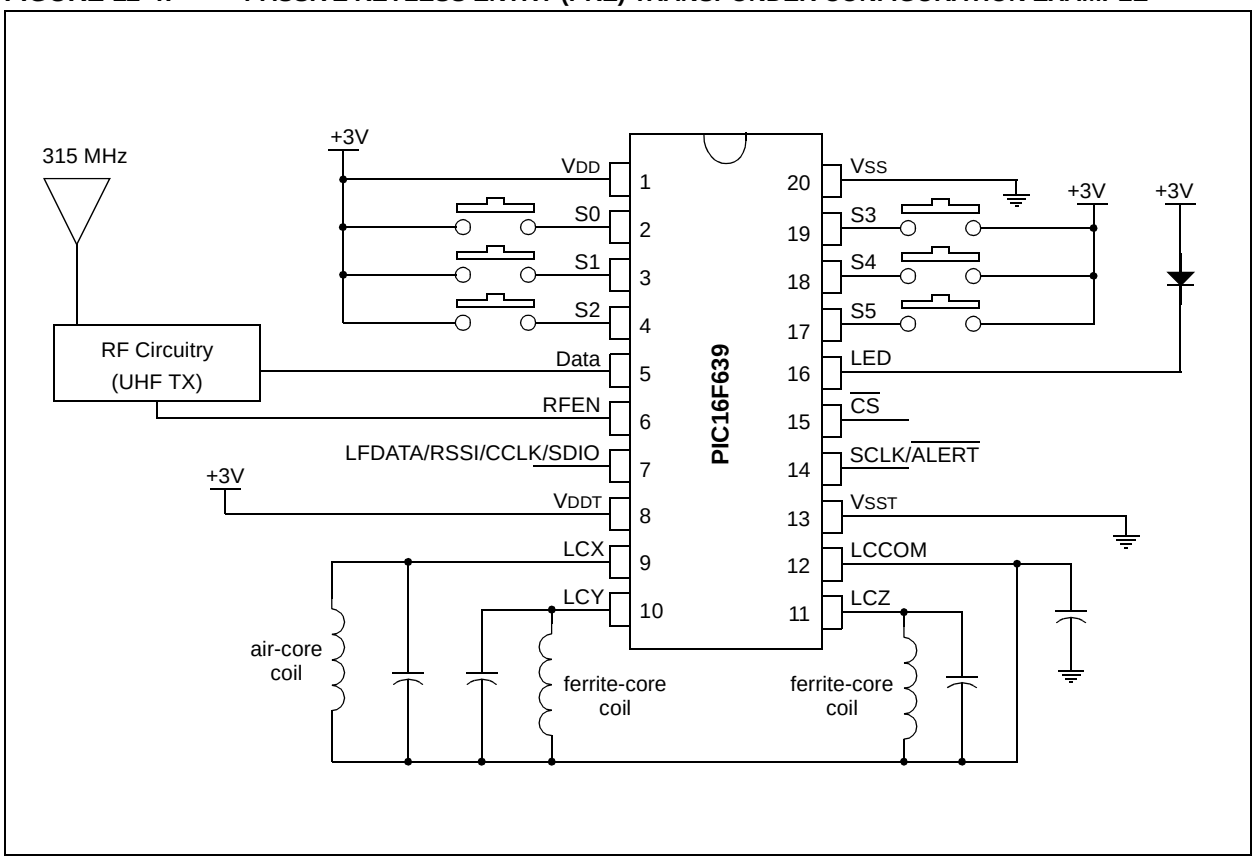

© 2007 Microchip Technology Inc.

11.15 Configurable Output Enable Filter

The purpose of this filter is to enable the LFDATA output and wake the microcontroller only after receiving a specific sequence of pulses on the LC input pins. Therefore, it prevents the AFE from waking up the microcontroller due to noise or unwanted input signals. The circuit compares the timing of the demodulated header waveform with a pre-defined value, and enables the demodulated LFDATA output when a match occurs.

The output enable filter consists of a high (TOEH) and low duration (TOEL) of a pulse immediately after the AGC settling gap time. The selection of high and low times further implies a max period time. The output enable high and low times are determined by SPI interface programming. Figure 11-5 and Figure 11-6 show the output enable filter waveforms.

There should be no missing cycles during TOEH. Missing cycles may result in failing the output enable condition.

FIGURE 11-5: OUTPUT ENABLE FILTER TIMING

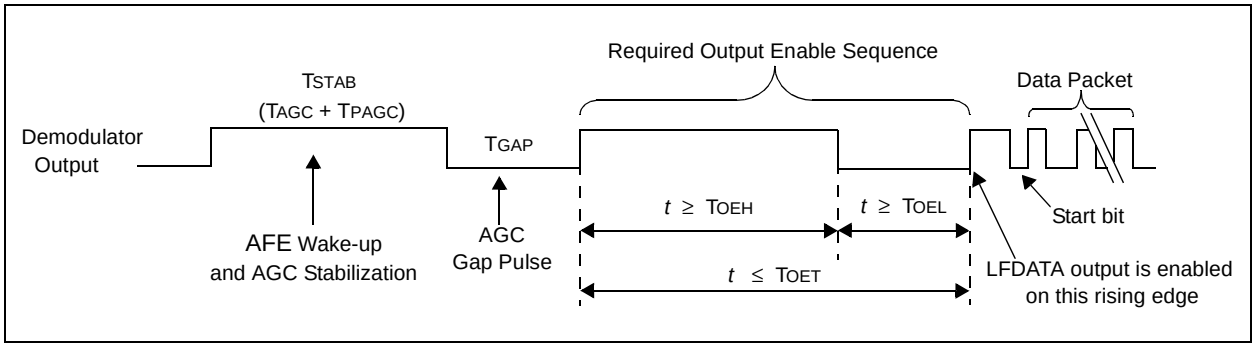

FIGURE 11-6: OUTPUT ENABLE FILTER TIMING EXAMPLE (DETAILED)

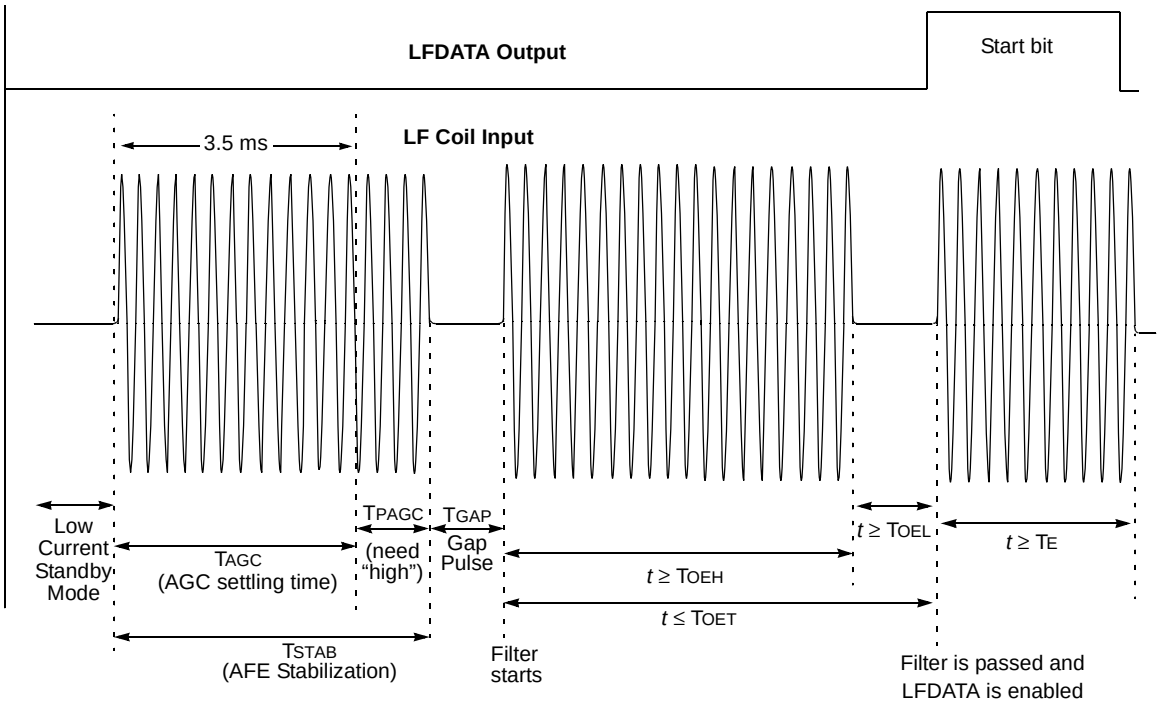

Legend:

T_{AGC}	=	AGC stabilization time
T_E	=	Time element of pulse
T_{GAP}	=	AGC stabilization gap
T_{OEH}	=	Minimum output enable filter high time
T_{OEL}	=	Minimum output enable filter low time
T_{OET}	=	Maximum output enable filter period
T_{PAGC}	=	High time after T_{AGC}
T_{STAB}	=	$T_{AGC} + T_{PAGC}$

© 2007 Microchip Technology Inc.

TABLE 11-1: TYPICAL OUTPUT ENABLE FILTER TIMING

OEH <1:0>	OEL <1:0>	TOEH (ms)	TOEL (ms)	TOET (ms)
01	00	1	1	3
01	01	1	1	3
01	10	1	2	4
01	11	1	4	6
10	00	2	1	4
10	01	2	1	4
10	10	2	2	5
10	11	2	4	8
11	00	4	1	6
11	01	4	1	6
11	10	4	2	8
11	11	4	4	10
00	xx	Filter Disabled		

Note 1: Typical at room temperature and V_{DD} = 3.0V, 32 kHz oscillator.

T_{OEH} is measured from the rising edge of the demodulator output to the first falling edge. The pulse width must fall within $T_{OEH} \le t \le T_{OET}$.

T_{OEL} is measured from the falling edge of the demodulator output to the rising edge of the next pulse. The pulse width must fall within $T_{OEL} \le t \le T_{OET}$.

T_{OET} is measured from rising edge to the next rising edge (i.e., the sum of T_{OEH} and T_{OEL}). The pulse width must be $t \le T_{OET}$. If the Configuration Register 0 (Register 11-1), OEL<8:7> is set to '00', then T_{OEH} must not exceed T_{OET} and T_{OEL} must not exceed T_{INACT}.

The filter will reset, requiring a complete new successive high and low period to enable LFDATA, under the following conditions.

- The received high is not greater than the configured minimum T_{OEH} value.
- During T_{OEH}, a loss of signal > 56 µs. A loss of signal < 56 µs may or may not cause a filter Reset.
- The received low is not greater than the configured minimum T_{OEL} value.
- The received sequence exceeds the maximum T_{OET} value:
  - $T_{OEH} + T_{OEL} > T_{OET}$
  - or $T_{OEH} > T_{OET}$
  - or $T_{OEL} > T_{OET}$
- A Soft Reset SPI command is received.

If the filter resets due to a long high ($T_{OEH} > T_{OET}$), the high-pulse timer will not begin timing again until after a gap of T_E and another low-to-high transition occurs on the demodulator output.

Disabling the output enable filter disables the T_{OEH} and T_{OEL} requirement and the AFE passes all received LF data. See Figure 11-10, Figure 11-11 and Figure 11-12 for examples.

When viewed from an application perspective, from the pin input, the actual output enable filter timing must factor in the analog delays in the input path (such as demodulator charge and discharge times).

- **T_{OEH}** - $T_{DR} + T_{DF}$
- **T_{OEL}** + $T_{DR} - T_{DF}$

The output enable filter starts immediately after T_{GAP}, the gap after AGC stabilization period.

11.16 Input Sensitivity Control

The AFE is designed to have typical input sensitivity of 3 mV_{PP}. This means any input signal with amplitude greater than 3 mV_{PP} can be detected. The AFE's internal AGC loop regulates the detecting signal amplitude when the input level is greater than approximately 20 mV_{PP}. This signal amplitude is called "AGC-active level". The AGC loop regulates the input voltage so that the input signal amplitude range will be kept within the linear range of the detection circuits without saturation. The AGC Active Status bit AGCACT<5>, in the AFE Status Register 7 (Register 11-8) is set if the AGC loop regulates the input voltage.

Table 11-2 shows the input sensitivity comparison when the AGCSIG option is used. When AGCSIG option bit is set, the demodulated output is available only when the AGC loop is active (see Table 11-1). The AFE has also input sensitivity reduction options per each channel. The Configuration Register 3 (Register 11-4), Configuration Register 4 (Register 11-5) and Configuration Register 5 (Register 11-6) have the option to reduce the channel gains from 0 dB to approximately -30 dB.

TABLE 11-2: INPUT SENSITIVITY VS. MODULATED SIGNAL STRENGTH SETTING (AGCSIG <7>)

AGCSIG<7> (Config. Register 5)	Description	Input Sensitivity (Typical)
0	Disabled – the AFE passes signal of any amplitude level it is capable of detecting (demodulated data and carrier clock).	3.0 mVPP
1	Enabled – No output until AGC Status = 1 (i.e., VPEAK ≈ 20 mVPP) (demodulated data and carrier clock). • Provides the best signal to noise ratio.	20 mVPP

11.17 Input Channels (Enable/Disable)

Each channel can be individually enabled or disabled by programming bits in Configuration Register 0<3:1> (Register 11-1).

The purpose of having an option to disable a particular channel is to minimize current draw by powering down as much circuitry as possible, if the channel is not needed for operation. The exact circuits disabled when an input is disabled are amplifiers, detector, full-wave rectifier, data slicer, and modulation FET. However, the RF input limiter remains active to protect the silicon from excessive antenna input voltages.

11.18 AGC Amplifier

The circuit automatically amplifies input signal voltage levels to an acceptable level for the data slicer. Fast attack and slow release by nature, the AGC tracks the carrier signal level and not the modulated data bits.

The AGC inherently tracks the strongest of the three antenna input signals. The AGC requires an AGC stabilization time (TAGC).

The AGC will attempt to regulate a channel's peak signal voltage into the data slicer to a desired regulated AGC voltage – reducing the input path's gain as the signal level attempts to increase above regulated AGC voltage, and allowing full amplification on signal levels below the regulated AGC voltage.

The AGC has two modes of operation:

1. During the AGC settling time (TAGC), the AGC time constant is fast, allowing a reasonably short acquisition time of the continuous input signal.
2. After TAGC, the AGC switches to a slower time constant for data slicing.

Also, the AGC is frozen when the input signal envelope is low. The AGC tracks only high envelope levels.

11.19 AGC Preserve

The AGC preserve feature allows the AFE to preserve the AGC value during the AGC settling time (TAGC) and apply the value to the data slicing circuit for the following data streams instead of using a new tracking value. This feature is useful to demodulate the input signal correctly when the input has random amplitude variations at a given time period. This feature is enabled when the AFE receives an AGC Preserve On command and disabled if it receives an AGC Preserve Off command. Once the AGC Preserve On command is received, the AFE acquires a new AGC value during each AGC settling time and preserves the value until a Soft Reset or an AGC Preserve Off command is issued. Therefore, it does not need to issue another AGC Preserve On command. An AGC Preserve Off command is needed to disable the AGC preserve feature (see **Section 11.32.2.5 "AGC Preserve On Command"** and **Section 11.32.2.6 "AGC Preserve Off Command"** for AGC Preserve commands).

© 2007 Microchip Technology Inc.

11.20 Soft Reset

The AFE issues a Soft Reset in the following events:

a) After Power-on Reset (POR),
b) After Inactivity timer time-out,
c) If an “Abort” occurs,
d) After receiving SPI Soft Reset command.

The “Abort” occurs if there is no positive signal detected at the end of the AGC stabilization period (T_{AGC}). The Soft Reset initializes internal circuits and brings the AFE into a low current Standby mode operation. The internal circuits that are initialized by the Soft Reset include:

- Output Enable Filter
- AGC circuits
- Demodulator
- 32 kHz Internal Oscillator

The Soft Reset has no effect on the Configuration register setup, except for some of the AFE Status Register 7 bits. (Register 11-8).

The circuit initialization takes one internal clock cycle (1/32 kHz = 31.25 µs). During the initialization, the modulation transistors between each input and LCCOM pins are turned-on to discharge any internal/external parasitic charges. The modulation transistors are turned-off immediately after the initialization time.

The Soft Reset is executed in Active mode only. It is not valid in Standby mode.

11.21 Minimum Modulation Depth Requirement for Input Signal

The AFE demodulates the modulated input signal if the modulation depth of the input signal is greater than the minimum requirement that is programmed in the AFE Configuration Register 5 (Register 11-6). Figure 11-7 shows the definition of the modulation depth and examples. MODMIN<6:5> of the Configuration Register 5 offer four options. They are 75%, 50%, 25% and 12%, with a default setting of 50%.

The purpose of this feature is to enhance the demodulation integrity of the input signal. The 12% setting is the best choice for the input signal with weak modulation depth, which is typically observed near the high-voltage base station antenna and also at far-distance from the base station antenna. It gives the best demodulation sensitivity, but is very susceptible to noise spikes that can result in a bit detection error. The 75% setting can reduce the bit errors caused by noise, but gives the least demodulation sensitivity. See Table 11-3 for minimum modulation depth requirement settings.

TABLE 11-3: SETTING FOR MINIMUM MODULATION DEPTH REQUIREMENT

MODMIN Bits (Config. Register 5)		Modulation Depth
Bit 6	Bit 5	
0	0	50% (default)
0	1	75%
1	0	25%
1	1	12%

FIGURE 11-7: MODULATION DEPTH EXAMPLES

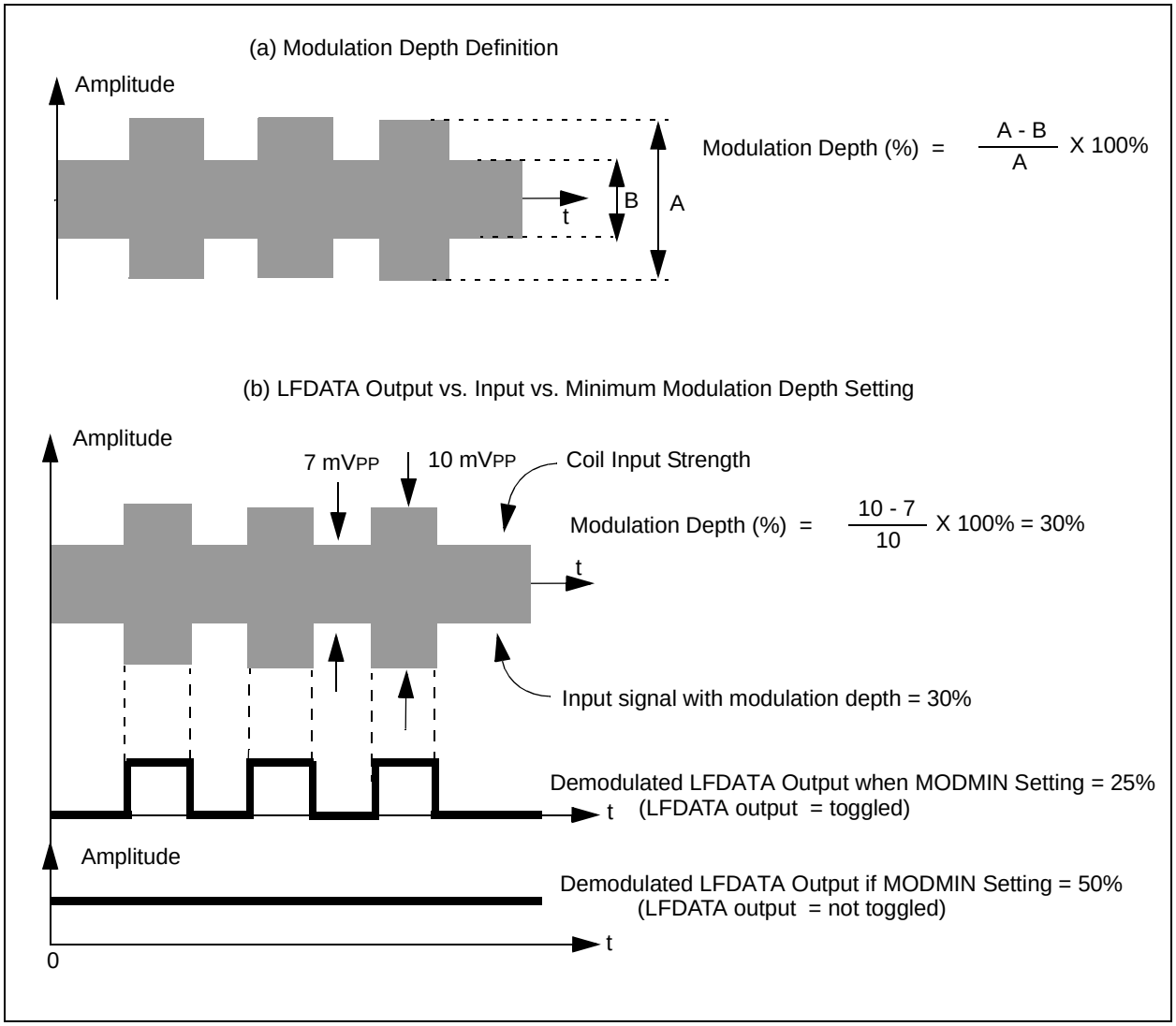

© 2007 Microchip Technology Inc.

11.22 Low-Current Sleep Mode

The Sleep command from the microcontroller, via an SPI Interface command, places the AFE into an ultra Low-current mode. All circuits including the RF Limiter, except the minimum circuitry required to retain register memory and SPI capability, will be powered down to minimize the AFE current draw. Power-on Reset or any SPI command, other than Sleep command, is required to wake the AFE from Sleep.

11.23 Low-Current Standby Mode

The AFE is in Standby mode when no LF signal is present on the antenna inputs but the AFE is powered and ready to receive any incoming signals.

11.24 Low-Current Operating Mode

The AFE is in Low-current Operating mode when a LF signal is present on an LF antenna input and internal circuitry is switching with the received data.

11.25 Error Detection of AFE Configuration Register Data

The AFE's Configuration registers are volatile memory. Therefore, the contents of the registers can be corrupted or cleared by any electrical incidence such as battery disconnect. To ensure the data integrity, the AFE has an error detection mechanism using row and column parity bits of the Configuration register memory map. The bit 0 of each register is a row parity bit which is calculated over the eight Configuration bits (from bit 1 to bit 8). The Column Parity Register (Configuration Register 6) holds column parity bits; each bit is calculated over the respective columns (Configuration registers 0 to 5) of the Configuration bits. The STATUS register is not included for the column parity bit calculation. Parity is to be odd. The parity bit set or cleared makes an odd number of set bits. The user needs to calculate the row and column parity bits using the contents of the registers and program them. During operation, the AFE continuously calculates the row and column parity bits of the configuration memory map. If a parity error occurs, the AFE lowers the SCLK/$\overline{\text{ALERT}}$ pin (interrupting the microcontroller section) indicating the configuration memory has been corrupted or unloaded and needs to be reprogrammed.

At an initial condition after a Power-On-Reset, the values of the registers are all clear (default condition). Therefore, the AFE will issue the parity bit error by lowering the SCLK/$\overline{\text{ALERT}}$ pin. If user reprograms the registers with correct parity bits, the SCLK/$\overline{\text{ALERT}}$ pin will be toggled to logic high level immediately.

The parity bit errors do not change or affect the AFE's functional operation.

Table 11-4 shows an example of the register values and corresponding parity bits.

TABLE 11-4: AFE CONFIGURATION REGISTER PARITY BIT EXAMPLE

Register Name	Bit 8	Bit 7	Bit 6	Bit 5	Bit 4	Bit 3	Bit 2	Bit 1	Bit 0 (Row Parity)
Configuration Register 0	1	0	1	0	1	0	0	0	**0**
Configuration Register 1	0	0	0	0	0	0	0	0	**1**
Configuration Register 2	0	0	0	0	0	0	0	0	**1**
Configuration Register 3	0	0	0	0	0	0	0	0	**1**
Configuration Register 4	0	0	0	0	0	0	0	0	**1**
Configuration Register 5	1	0	0	0	0	0	0	0	**0**
Configuration Register 6 (Column Parity Register)	**1**	**1**	**0**	**1**	**0**	**1**	**1**	**1**	**1**

11.26 Factory Calibration

Microchip calibrates the AFE to reduce the device-to-device variation in standby current, internal timing and sensitivity, as well as channel-to-channel sensitivity variation.

11.27 De-Q'ing of Antenna Circuit

When the transponder is close to the base station, the transponder coil may develop coil voltage higher than V_{DE_Q}. This condition is called "near field". The AFE detects the strong near field signal through the AGC control, and de-Q'ing the antenna circuit to reduce the input signal amplitude.

11.28 Battery Back-up and Batteryless Operation

The device supports both battery back-up and batteryless operation by the addition of external components, allowing the device to be partially or completely powered from the field.

Figure 11-8 shows an example of the external circuit for the battery back-up.

Note:	Voltage on LCCOM combined with coil input voltage must not exceed the maximum LC input voltage.

FIGURE 11-8: LF FIELD POWERING AND BATTERY BACK-UP EXAMPLE

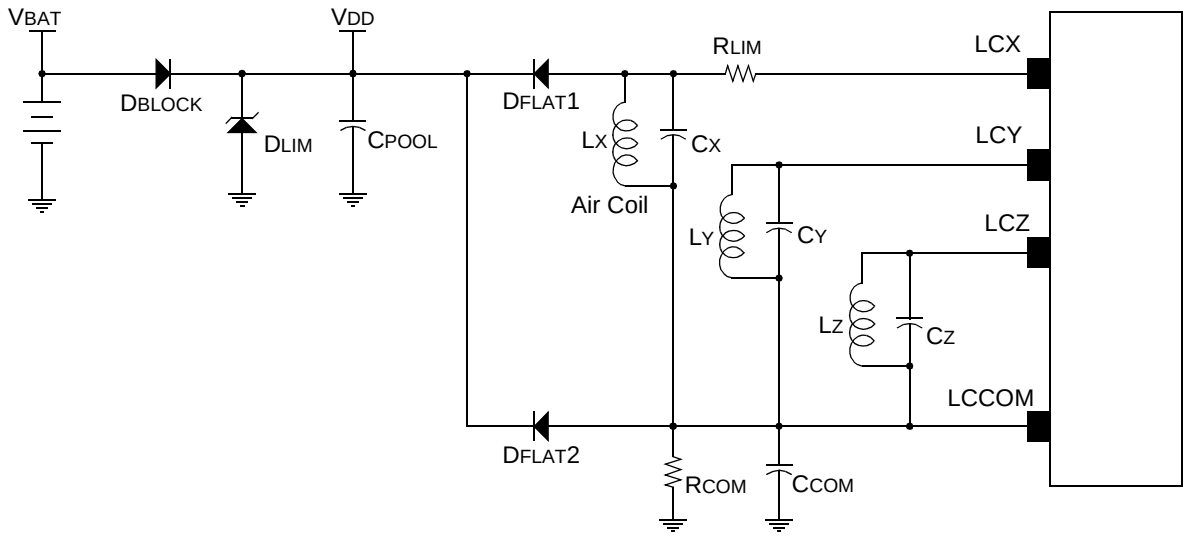

Legend:
- C_{COM} = LCCOM charging capacitor.
- C_{POOL} = Pool capacitor (or battery back-up capacitor), charges in field and powers device.
- D_{BLOCK} = Battery protection from reverse charge. Schottky for low forward bias drop.
- D_{FLAT} = Field rectifier diodes.
- D_{LIM} = Voltage limiting diode, may be required to limit V_{DD} voltage when in strong fields.
- R_{COM} = C_{COM} discharge path.
- R_{LIM} = Current limiting resistor, required for air coil in strong fields.

© 2007 Microchip Technology Inc.

11.29 Demodulator

The demodulator recovers the modulation data from the received signal, containing carrier plus data, by appropriate envelope detection. The demodulator has a fast rise (charge) time (T_{DR}) and a fall time (T_{DF}) appropriate to an envelope of input signal (see **Section 15.0 "Electrical Specifications"** for T_{DR} and T_{DF} specifications). The demodulator contains the full-wave rectifier, low-pass filter, peak detector and data slicer.

FIGURE 11-9: DEMODULATOR CHARGE AND DISCHARGE

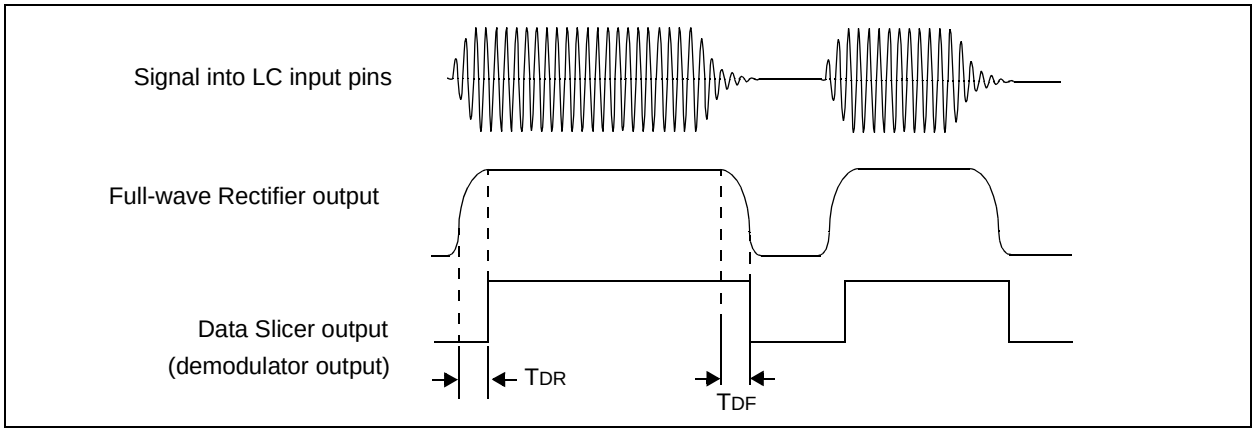

11.30 Power-On Reset

This circuit remains in a Reset state until a sufficient supply voltage is applied to the AFE. The Reset releases when the supply is sufficient for correct AFE operation, nominally V_{POR} of AFE.

The Configuration registers are all cleared on a Power-on Reset. As the Configuration registers are protected by odd row and column parity, the $\overline{\text{ALERT}}$ pin will be pulled down – indicating to the microcontroller section that the AFE configuration memory is cleared and requires loading.

11.31 LFDATA Output Selection

The LFDATA output can be configured to pass the Demodulator output, Received Signal Strength Indicator (RSSI) output, or Carrier Clock. See Configuration Register 1 (Register 11-2) for more details.

11.31.1 DEMODULATOR OUTPUT

The demodulator output is the default configuration of the output selection. This is the output of an envelope detection circuit. See Figure 11-9 for the demodulator output.

For a clean data output or to save operating power, the input channels can be individually enabled or disabled. If more than one channel is enabled, the output is the sum of each output of all enabled channels. There will be no valid output if all three channels are disabled. When the demodulated output is selected, the output is available in two different conditions depending on how the options of Configuration Register 0 (Register 11-1) are set: Output Enable Filter is disabled or enabled.

Related Configuration register bits:

- Configuration Register 1 (Register 11-2), DATOUT <8:7>:
  - bit 8 bit 7
    - 0 0: Demodulator Output
    - 0 1: Carrier Clock Output
    - 1 0: RSSI Output
    - 0 1: RSSI Output
- Configuration Register 0 (Register 11-1): all bits

Case I. When Output Enable Filter is disabled: Demodulated output is available immediately after the AGC stabilization time (TAGC). Figure 11-10 shows an example of demodulated output when the Output Enable Filter is disabled.

FIGURE 11-10: INPUT SIGNAL AND DEMODULATOR OUTPUT WHEN THE OUTPUT ENABLE FILTER IS DISABLED

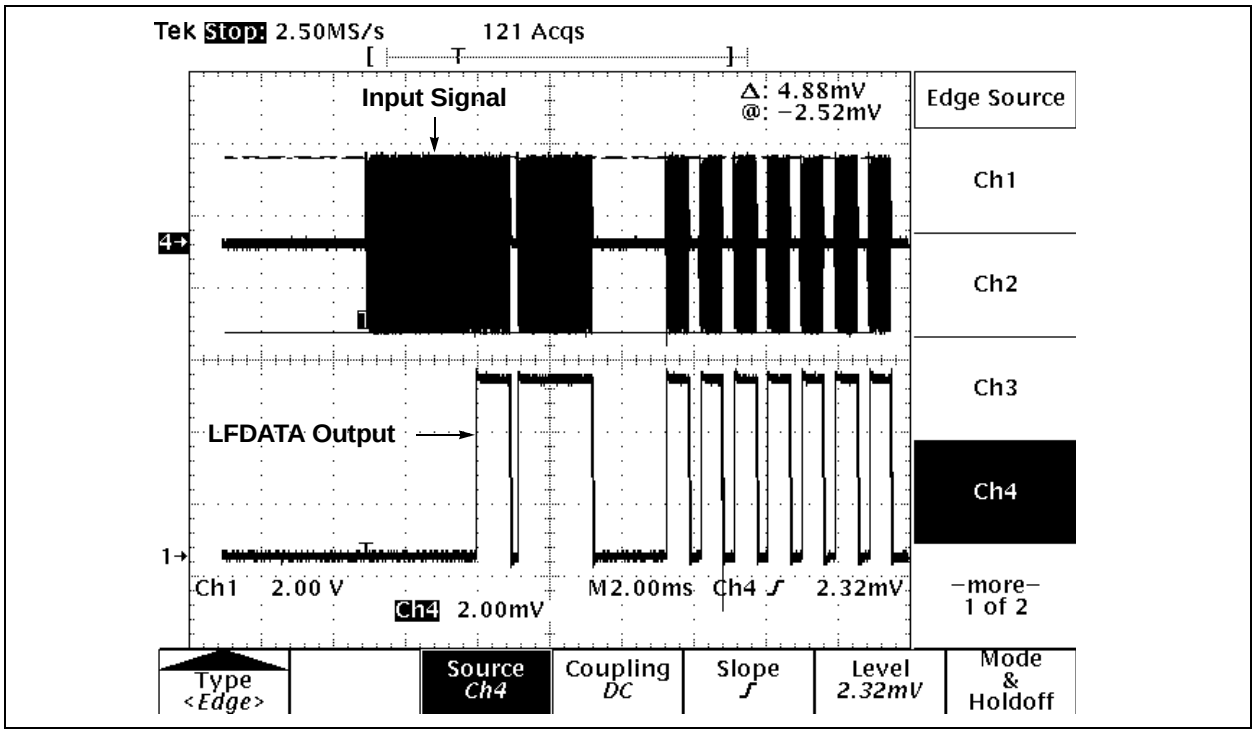

Case II. When Output Enable Filter is enabled: Demodulated output is available only if the incoming signal meets the enable filter timing criteria that is defined in the Configuration Register 0 (Register 11-1). If the criteria is met, the output is available after the low timing (TOEL) of the Enable Filter. Figure 11-11 and Figure 11-12 shows examples of demodulated output when the Output Enable Filter is enabled.

© 2007 Microchip Technology Inc.

FIGURE 11-11: INPUT SIGNAL AND DEMODULATOR OUTPUT (WHEN OUTPUT ENABLE FILTER IS ENABLED AND INPUT MEETS FILTER TIMING REQUIREMENTS)

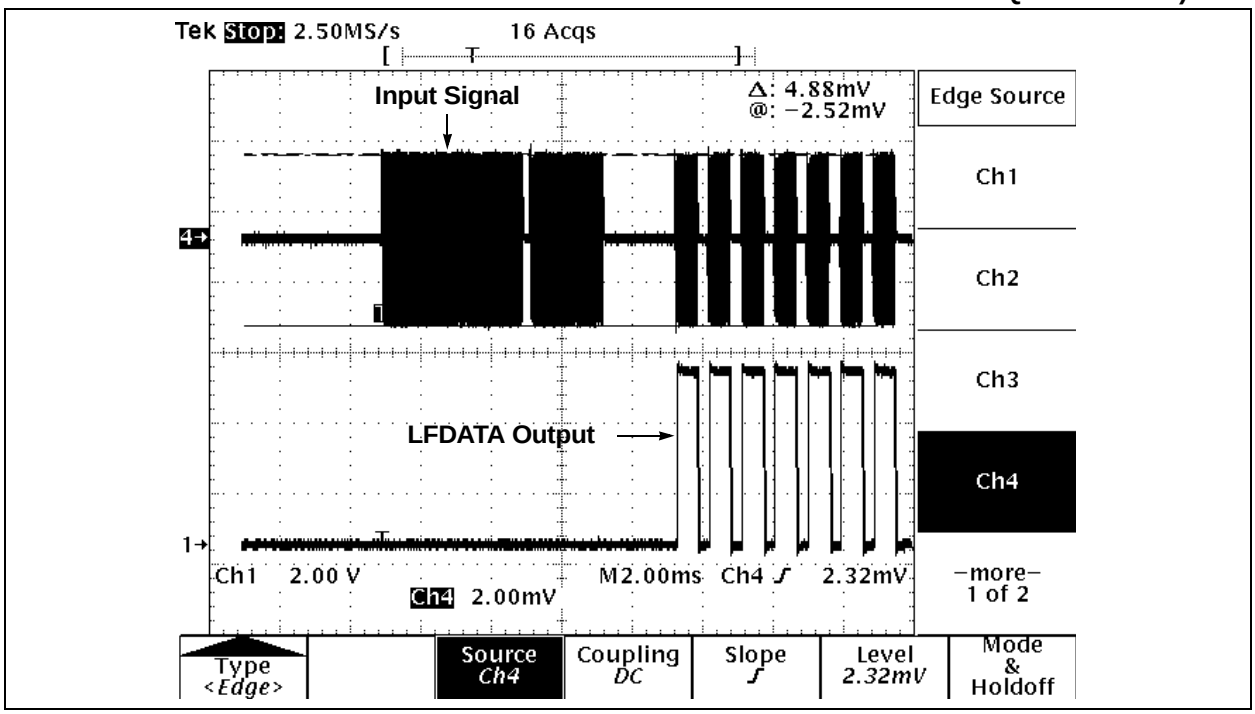

FIGURE 11-12: NO DEMODULATOR OUTPUT (WHEN OUTPUT ENABLE FILTER IS ENABLED BUT INPUT DOES NOT MEET FILTER TIMING REQUIREMENTS)

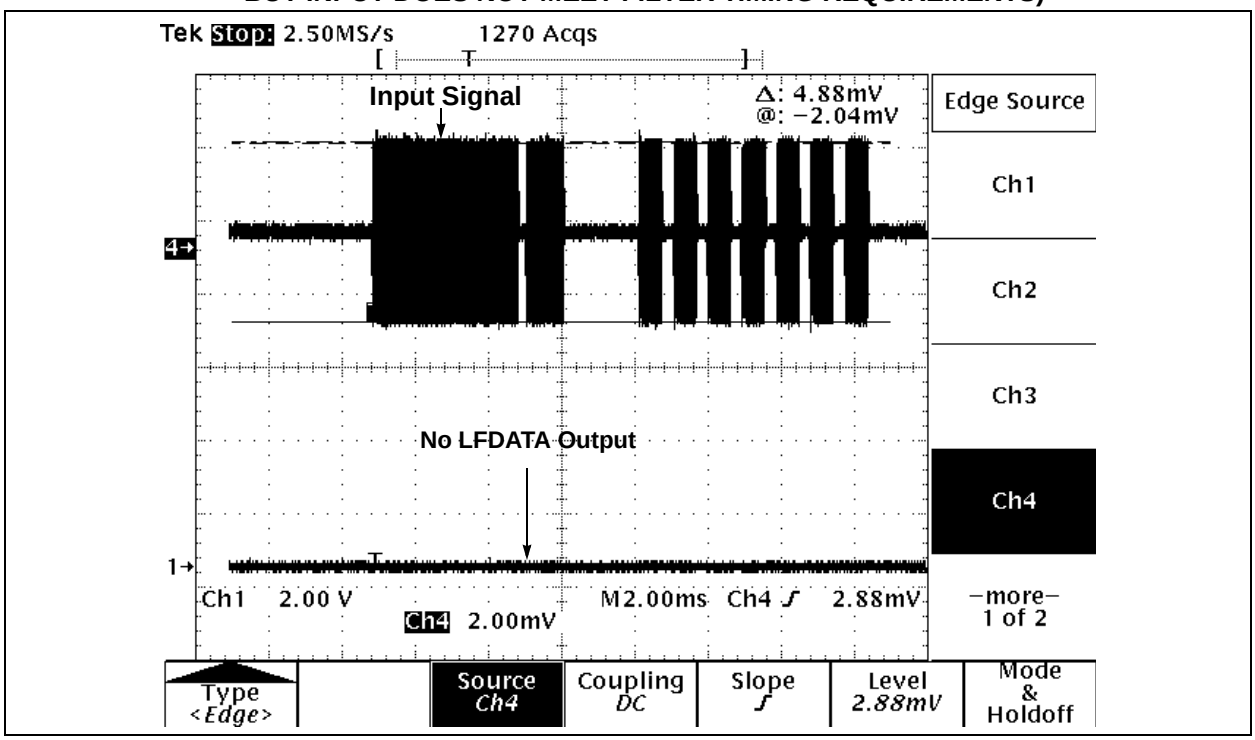

11.31.2 CARRIER CLOCK OUTPUT

When the Carrier Clock output is selected, the LFDATA output is a square pulse of the input carrier clock and available as soon as the AGC stabilization time (T_{AGC}) is completed. There are two Configuration register options for the carrier clock output: (a) clock divide-by one or (b) clock divide-by four, depending on bit DATOUT<7> of Configuration Register 2 (Register 11-3). The carrier clock output is available immediately after the AGC settling time. The Output Enable Filter, AGCSIG, and MODMIN options are applicable for the carrier clock output in the same way as the demodulated output. The input channel can be individually enabled or disabled for the output. If more than one channel is enabled, the output is the sum of each output of all enabled channels. Therefore, the carrier clock output waveform is not as precise as when only one channel is enabled. It is recommended to enable one channel only if a precise output waveform is desired.

There will be no valid output if all three channels are disabled. See Figure 11-13 for carrier clock output examples.

Related Configuration register bits:

- Configuration Register 1 (Register 11-2), DATOUT <8:7>:

bit 8	bit 7	
0	0	Demodulator Output
0	1	Carrier Clock Output
1	0	RSSI Output
1	1	RSSI Output

- Configuration Register 2 (Register 11-3), CLKDIV<7>:

  0: Carrier Clock/1

  1: Carrier Clock/4

- Configuration Register 0 (Register 11-1): all bits are affected
- Configuration Register 5 (Register 11-6)

© 2007 Microchip Technology Inc.

FIGURE 11-13: CARRIER CLOCK OUTPUT EXAMPLES

(A) CARRIER CLOCK OUTPUT WITH CARRIER/1 OPTION

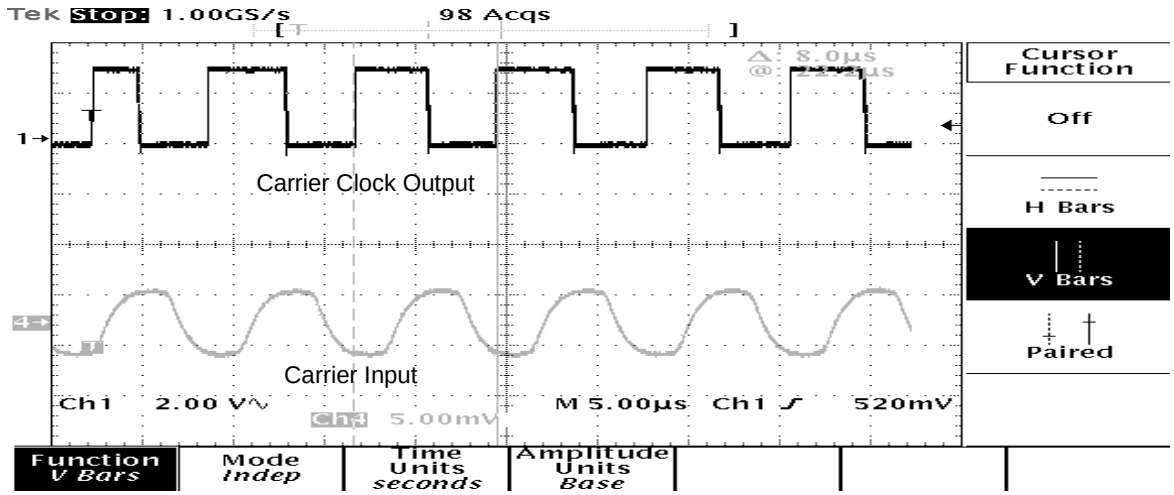

(B) CARRIER CLOCK OUTPUT WITH CARRIER/4 OPTION

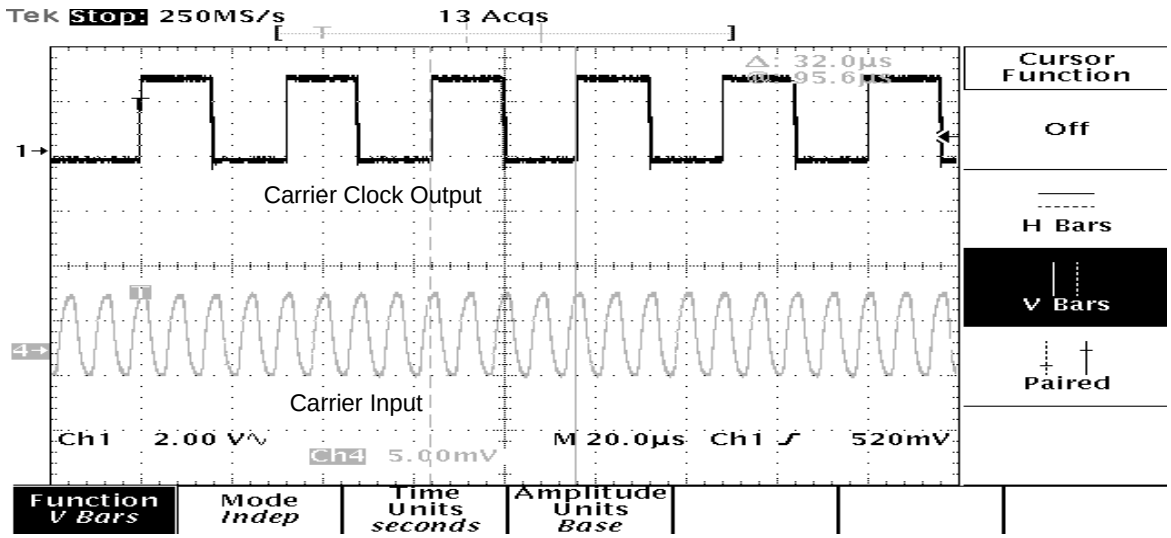

11.31.3 RECEIVED SIGNAL STRENGTH INDICATOR (RSSI) OUTPUT

An analog current is available at the LFDATA pin when the Received Signal Strength Indicator (RSSI) output is selected for the AFE's Configuration register. The analog current is linearly proportional to the input signal strength (see Figure 11-15).

All timers in the circuit, such as inactivity timer, alarm timer, and AGC settling time, are disabled during the RSSI mode. Therefore, the RSSI output is not affected by the AGC settling time, and available immediately when the RSSI option is selected. The AFE enters Active mode immediately when the RSSI output is selected. The MCU I/O pin (RC3) connected to the LFDATA pin, must be set to high-impedance state during the RSSI Output mode.

When the AFE receives an SPI command during the RSSI output, the RSSI mode is temporary disabled until the SPI interface communication is completed. It returns to the RSSI mode again after the SPI interface communication is completed. The AFE holds the RSSI mode until another output type is selected ($\overline{CS}$ low turns off the RSSI signal). To obtain the RSSI output for a particular input channel, or to save operating power, the input channel can be individually enabled or disabled. If more than one channel is enabled, the RSSI output is from the strongest signal channel. There will be no valid output if all three channels are disabled.

Related AFE Configuration register bits:

- Configuration Register 1 (Register 11-2), DATOUT<8:7>:

bit 8	bit 7	
0	0	Demodulated Output
0	1	Carrier Clock Output
1	0	RSSI Output
1	1	RSSI Output

- Configuration Register 2 (Register 11-3), RSSIFET<8>:

  0: Pull-Down MOSFET off

  1: Pull-Down MOSFET on.

> **Note:** The pull-down MOSFET option is valid only when the RSSI output is selected. The MOSFET is not controllable by users when Demodulated or Carrier Clock output option is selected.

- Configuration Register 0 (Register 11-1): all bits are affected.

FIGURE 11-14: RSSI OUTPUT PATH

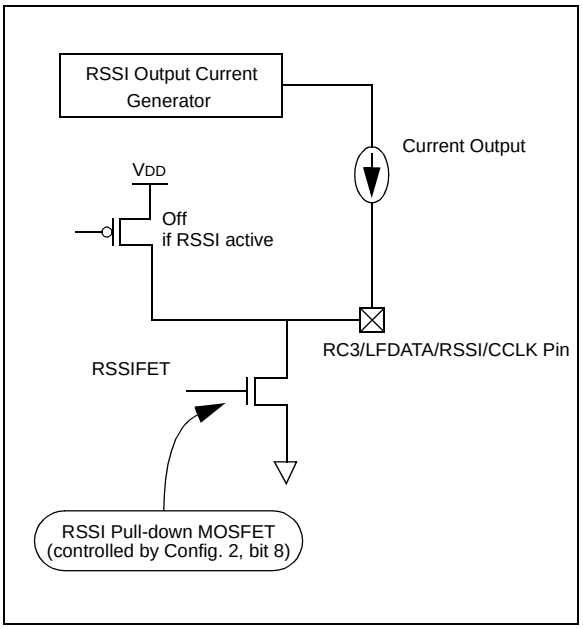

© 2007 Microchip Technology Inc.

FIGURE 11-15: RSSI OUTPUT CURRENT VS. INPUT SIGNAL LEVEL EXAMPLE

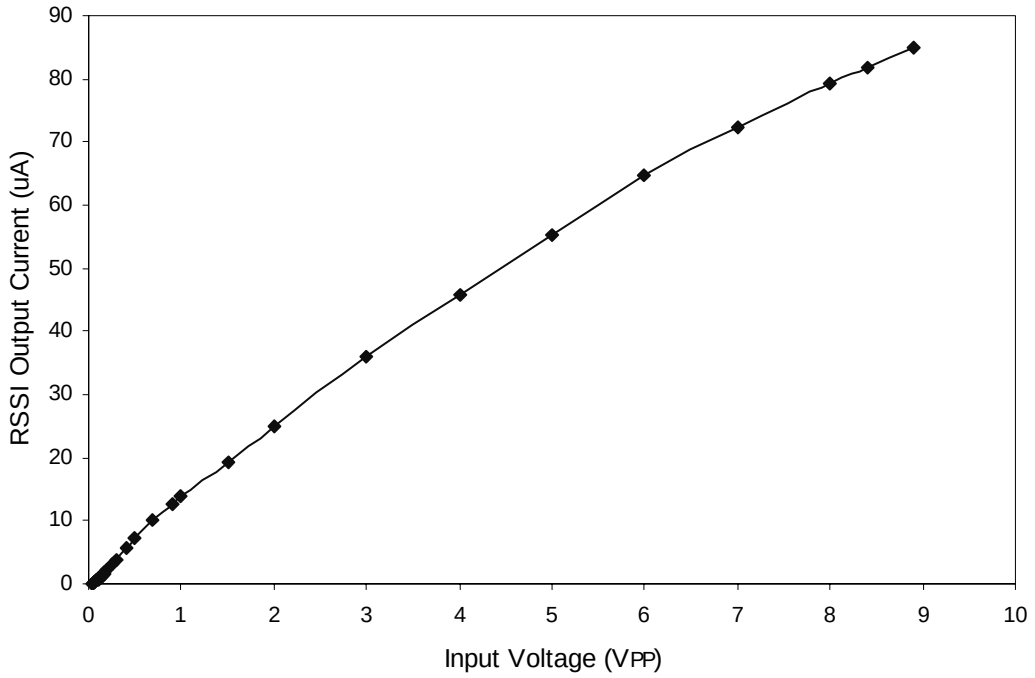

11.31.3.1 ANALOG-TO-DIGITAL DATA CONVERSION OF RSSI SIGNAL

The AFE's RSSI output is an analog current. It needs an external Analog-to-Digital (ADC) data conversion device for digitized output. The ADC data conversion can be accomplished by using a stand-alone external ADC device or by firmware utilizing MCU's internal comparator along with a few external resistors and a capacitor. For slope ADC implementations, the external capacitor at the LFDATA pad needs to be discharged before data sampling. For this purpose, the internal pull-down MOSFET on the LFDATA pad can be utilized. The MOSFET can be turned on or off with bit RSSIFET<8> of the Configuration Register 2 (Register 11-3). When it is turned on, the internal MOSFET provides a discharge path for the external capacitor. This MOSFET option is valid only if RSSI output is selected and not controllable by users for demodulated or carrier clock output options.

See separate application notes for various external ADC implementation methods for this device.

11.32 AFE Configuration

11.32.1 SPI COMMUNICATION

The AFE SPI interface communication is used to read or write the AFE's Configuration registers and to send command only messages. For the SPI interface, the device has three pads; $\overline{CS}$, SCLK/$\overline{ALERT}$, and LFDATA/RSSI/CCLK/SDIO. Figure 11-15, Figure 11-14, Figure 11-16 and Figure 11-17 shows examples of the SPI communication sequences.

When the device powers up, these pins will be high-impedance inputs until firmware modifies them appropriately. The AFE pins connected to the MCU pins will be as follows.

$\overline{CS}$

- Pin is permanently an input with an internal pull-up.

SCLK/$\overline{ALERT}$

- Pin is an open collector output when $\overline{CS}$ is high. An internal pull-up resistor exists internal to the AFE to ensure no spurious SPI communication between powering and the MCU configuring its pins. This pin becomes the SPI clock input when $\overline{CS}$ is low.

LFDATA/RSSI/CCLK/SDIO

- Pin is a digital output (LFDATA) so long as $\overline{CS}$ is high. During SPI communication, the pin is the SPI data input (SDI) unless performing a register Read, where it will be the SPI data output (SDO).

FIGURE 11-16: POWER-UP SEQUENCE

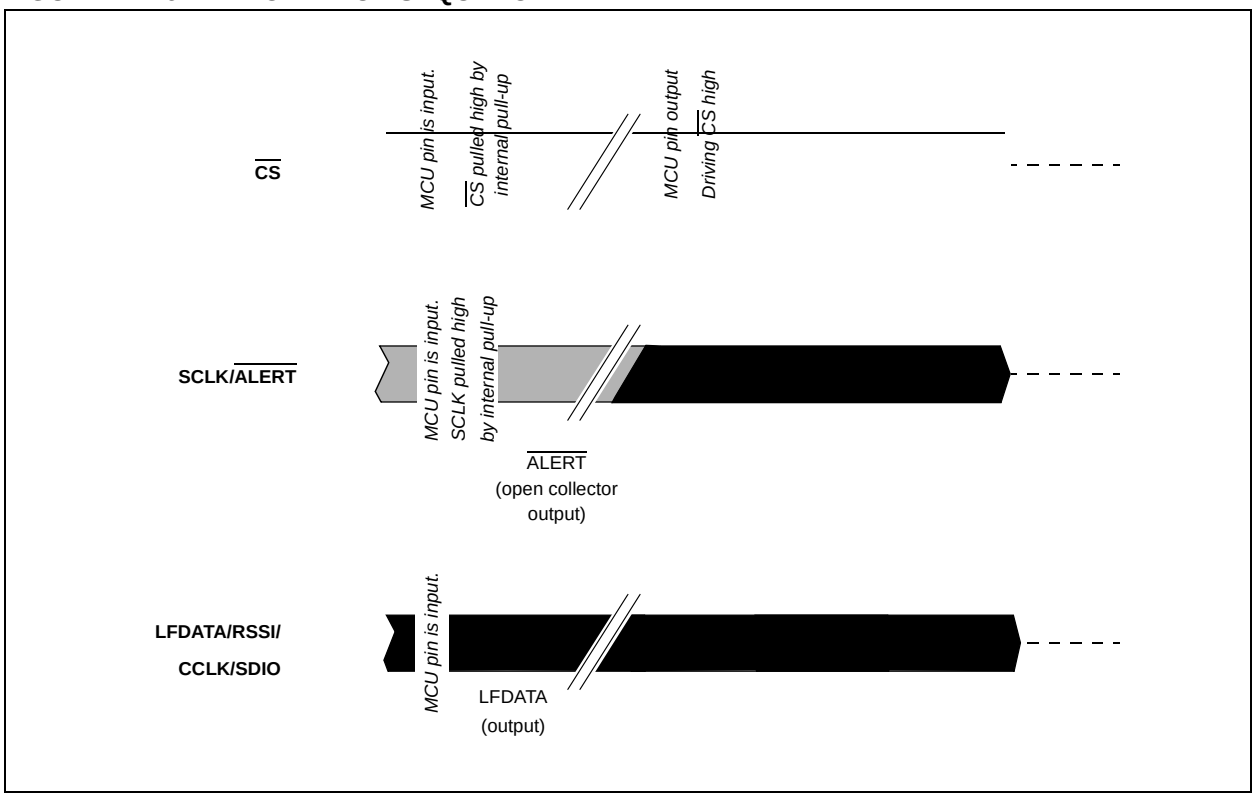

© 2007 Microchip Technology Inc.

FIGURE 11-17: SPI WRITE SEQUENCE

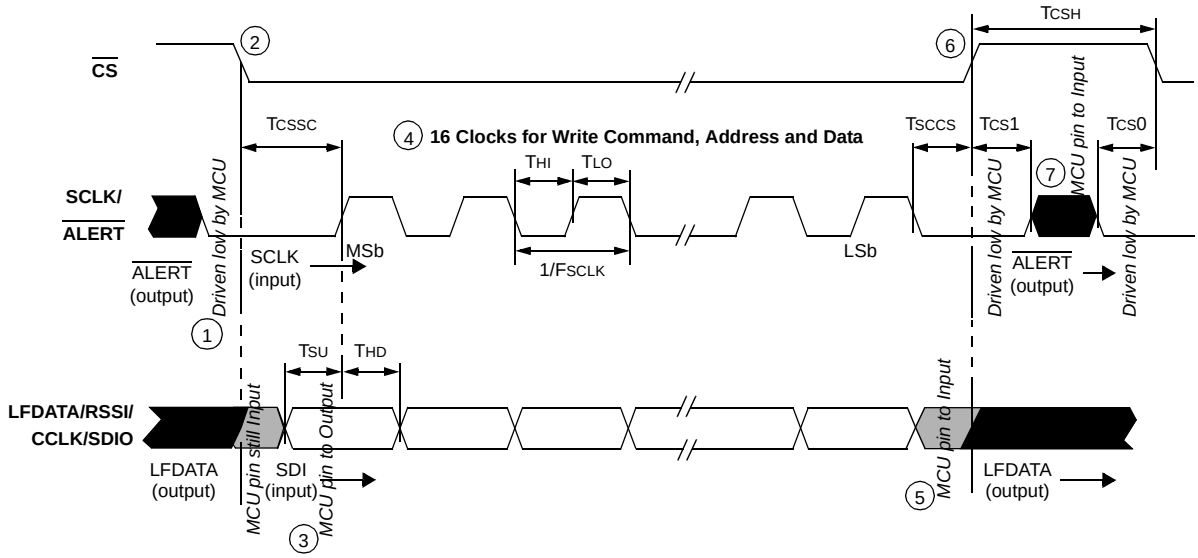

MCU SPI Write Details:

1. Drive the AFE's open collector $\overline{\text{ALERT}}$ output low.
   - To ensure no false clocks occur when $\overline{\text{CS}}$ drops.
2. Drop $\overline{\text{CS}}$.
   - AFE SCLK/$\overline{\text{ALERT}}$ becomes SCLK input.
   - LFDATA/RSSI/CCLK/SDIO becomes SDI input.
3. Change LFDATA/RSSI/CCLK/SDIO connected pin to output.
   - Driving SPI data.
4. Clock in 16-bit SPI Write sequence - command, address, data and parity bit.
   - Command, address, data and parity bit.
5. Change LFDATA/RSSI/CCLK/SDIO connected pin to input.
6. Raise $\overline{\text{CS}}$ to complete the SPI Write.
7. Change SCLK/$\overline{\text{ALERT}}$ back to input.

FIGURE 11-18: SPI READ SEQUENCE

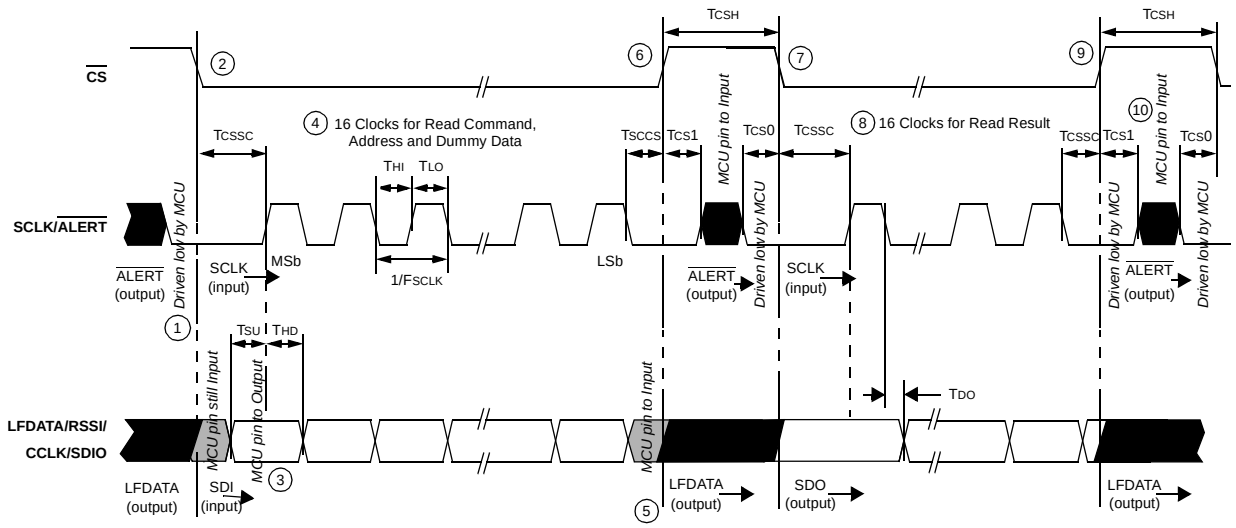

MCU SPI Read Details:

1. Drive the AFE's open collector $\overline{\text{ALERT}}$ output low.
   - To ensure no false clocks occur when $\overline{\text{CS}}$ drops.
2. Drop $\overline{\text{CS}}$
   - AFE SCLK/$\overline{\text{ALERT}}$ becomes SCLK input.
   - LFDATA/RSSI/CCLK/SDIO becomes SDI input.
3. Change LFDATA/RSSI/CCLK/SDIO connected pin to output.
   - Driving SPI data.
4. Clock in 16-bit SPI Read sequence.
   - Command, address and dummy data.
5. Change LFDATA/RSSI/CCLK/SDIO connected pin to input.
6. Raise $\overline{\text{CS}}$ to complete the SPI Read entry of command and address.
7. Drop $\overline{\text{CS}}$.
   - AFE SCLK/$\overline{\text{ALERT}}$ becomes SCLK input.
   - LFDATA/RSSI/CCLK/SDIO becomes SDO output.
8. Clock out 16-bit SPI Read result.
   - First seven bits clocked-out are dummy bits.
   - Next eight bits are the Configuration register data.
   - The last bit is the Configuration register row parity bit.
9. Raise $\overline{\text{CS}}$ to complete the SPI Read.
10. Change SCLK/$\overline{\text{ALERT}}$ back to input.

Note: The T_{CSH} is considered as one clock. Therefore, the Configuration register data appears at 6th clock after T_{CSH}.

© 2007 Microchip Technology Inc.

11.32.2 COMMAND DECODER/CONTROLLER

The circuit executes 8 SPI commands from the MCU. The command structure is:

Command (3 bits) + Configuration Address (4 bits) + Data Byte and Row Parity Bit received by the AFE Most Significant bit first. Table 11-5 shows the available SPI commands.

The AFE operates in SPI mode 0,0. In mode 0,0 the clock idles in the low state (Figure 11-19). SDI data is loaded into the AFE on the rising edge of SCLK and SDO data is clocked out on the falling edge of SCLK. There must be multiples of 16 clocks (SCLK) while $\overline{CS}$ is low or commands will abort.

TABLE 11-5: SPI COMMANDS (AFE)

Command	Address	Data	Row Parity	Description
Command only – Address and Data are "Don't Care", but need to be clocked in regardless.				
000	XXXX	XXXX XXXX	X	Clamp on – enable modulation circuit
001	XXXX	XXXX XXXX	X	Clamp off – disable modulation circuit
010	XXXX	XXXX XXXX	X	Enter Sleep mode (any other command wakes the AFE)
011	XXXX	XXXX XXXX	X	AGC Preserve On – to temporarily preserve the current AGC level
100	XXXX	XXXX XXXX	X	AGC Preserve Off – AGC again tracks strongest input signal
101	XXXX	XXXX XXXX	X	Soft Reset – resets various circuit blocks
Read Command – Data will be read from the specified register address.				
110	0000	Config Byte 0	P	General – options that may change during normal operation
	0001	Config Byte 1	P	LCX antenna tuning and LFDATA output format
	0010	Config Byte 2	P	LCY antenna tuning
	0011	Config Byte 3	P	LCZ antenna tuning
	0100	Config Byte 4	P	LCX and LCY sensitivity reduction
	0101	Config Byte 5	P	LCZ sensitivity reduction and modulation depth
	0110	Column Parity	P	Column parity byte for Config Byte 0 -> Config Byte 5
	0111	AFE Status	X	AFE status – parity error, which input is active, etc.
Write Command – Data will be written to the specified register address.				
111	0000	Config Byte 0	P	General – options that may change during normal operation
	0001	Config Byte 1	P	LCX antenna tuning and LFDATA output format
	0010	Config Byte 2	P	LCY antenna tuning
	0011	Config Byte 3	P	LCZ antenna tuning
	0100	Config Byte 4	P	LCX and LCY sensitivity reduction
	0101	Config Byte 5	P	LCZ sensitivity reduction and modulation depth
	0110	Column Parity	P	Column parity byte for Config Byte 0 -> Config Byte 5
	0111	Not Used	X	Register is readable, but not writable
Note: 'P' denotes the row parity bit (odd parity) for the respective data byte.				

FIGURE 11-19: DETAILED SPI INTERFACE TIMING (AFE)

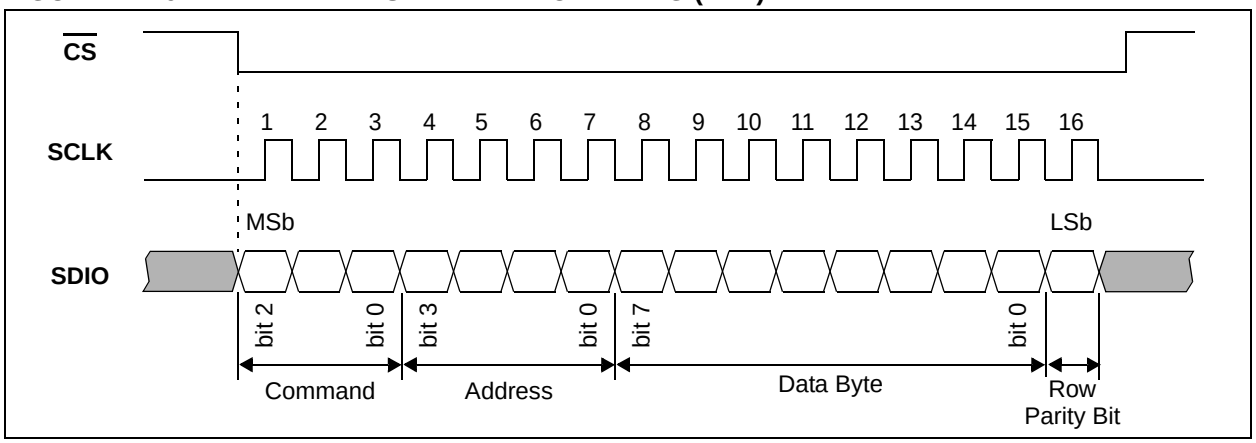

11.32.2.1 Clamp On Command

This command results in activating (turning on) the modulation transistors of all enabled channels; channels enabled in Configuration Register 0 (Register 11-1).

11.32.2.2 Clamp Off Command

This command results in de-activating (turning off) the modulation transistors of all channels.

11.32.2.3 Sleep Command

This command places the AFE in Sleep mode – minimizing current draw by disabling all but the essential circuitry. Any other command wakes the AFE (example: Clamp Off command).

11.32.2.4 Soft Reset Command

The AFE issues a Soft Reset when it receives an external Soft Reset command. The external Soft Reset command is typically used to end a SPI communication sequence or to initialize the AFE for the next signal detection sequence, etc. See **Section 11.20 "Soft Reset"** for more details on Soft Reset.

If a Soft Reset command is sent during a "Clamp-on" condition, the AFE still keeps the "Clamp-on" condition after the Soft Reset execution. The Soft Reset is executed in Active mode only, not in Standby mode. The SPI Soft Reset command is ignored if the AFE is not in Active mode.

11.32.2.5 AGC Preserve On Command

This command results in preserving the AGC level during each AGC settling time and apply the value to the data slicing circuit for the following data stream. The preserved AGC value is reset by a Soft Reset, and a new AGC value is acquired and preserved when it starts a new AGC settling time. This feature is disabled by an AGC Preserve Off command (see **Section 11.19 "AGC Preserve"**).

11.32.2.6 AGC Preserve Off Command

This command disables the AGC preserve feature and returns the AFE to the normal AGC tracking mode, fast tracking during AGC settling time and slow tracking after that (see **Section 11.19 "AGC Preserve"**).

11.32.3 CONFIGURATION REGISTERS

The AFE includes 8 Configuration registers, including a column parity register and AFE Status Register. All registers are readable and writable via SPI, except STATUS register, which is readable only. Bit 0 of each register is a row parity bit (except for the AFE Status Register 7) that makes the register contents an odd number.

© 2007 Microchip Technology Inc.

TABLE 11-6: ANALOG FRONT-END CONFIGURATION REGISTERS SUMMARY

Register Name	Address	Bit 8	Bit 7	Bit 6	Bit 5	Bit 4	Bit 3	Bit 2	Bit 1	Bit 0
Configuration Register 0	0000	OEH		OEL		ALRTIND	LCZEN	LCYEN	LCXEN	R0PAR
Configuration Register 1	0001	DATOUT		Channel X Tuning Capacitor						R1PAR
Configuration Register 2	0010	RSSIFET	CLKDIV	Channel Y Tuning Capacitor						R2PAR
Configuration Register 3	0011	Unimplemented		Channel Z Tuning Capacitor						R3PAR
Configuration Register 4	0100	Channel X Sensitivity Control				Channel Y Sensitivity Control				R4PAR
Configuration Register 5	0101	AUTOCHSEL	AGCSIG	MODMIN	MODMIN	Channel Z Sensitivity Control				R5PAR
Column Parity Register 6	0110	Column Parity Bits								R6PAR
AFE Status Register 7	0111	Active Channel Indicators			AGCACT	Wake-up Channel Indicators			ALARM	PEI

REGISTER 11-1: CONFIGURATION REGISTER 0

R/W-0	R/W-0	R/W-0	R/W-0	R/W-0	R/W-0	R/W-0	R/W-0	R/W-0
OEH1	OEH0	OEL1	OEL0	ALRTIND	LCZEN	LCYEN	LCXEN	R0PAR
bit 8								bit 0

Legend:			
R = Readable bit	W = Writable bit	U = Unimplemented bit, read as ‘0’	
-n = Value at POR	‘1’ = Bit is set	‘0’ = Bit is cleared	x = Bit is unknown

bit 8-7 **OEH<1:0>**: Output Enable Filter High Time (TOEH) bit
00 = Output Enable Filter disabled (no wake-up sequence required, passes all signal to LFDATA)
01 = 1 ms
10 = 2 ms
11 = 4 ms

bit 6-5 **OEL<1:0>**: Output Enable Filter Low Time (TOEL) bit
00 = 1 ms
01 = 1 ms
10 = 2 ms
11 = 4 ms

bit 4 **ALRTIND**: $\overline{\text{ALERT}}$ bit, output triggered by:
1 = Parity error and/or expired Alarm timer (receiving noise, see **Section 11.14.3 “Alarm Timer”**)
0 = Parity error

bit 3 **LCZEN:** LCZ Enable bit
1 = Disabled
0 = Enabled

bit 2 **LCYEN:** LCY Enable bit
1 = Disabled
0 = Enabled

bit 1 **LCXEN:** LCX Enable bit
1 = Disabled
0 = Enabled

bit 0 **R0PAR**: Register Parity bit – set/cleared so the 9-bit register contains odd parity – an odd number of set bits

REGISTER 11-2: CONFIGURATION REGISTER 1

R/W-0	R/W-0	R/W-0	R/W-0	R/W-0	R/W-0	R/W-0	R/W-0	R/W-0
DATOUT1	DATOUT0	LCXTUN5	LCXTUN4	LCXTUN3	LCXTUN2	LCXTUN1	LCXTUN0	R1PAR
bit 8								bit 0

Legend:			
R = Readable bit	W = Writable bit	U = Unimplemented bit, read as ‘0’	
-n = Value at POR	‘1’ = Bit is set	‘0’ = Bit is cleared	x = Bit is unknown

bit 8-7 **DATOUT<1:0>:** LFDATA Output type bit
`00` = Demodulated output
`01` = Carrier Clock output
`10` = RSSI output
`11` = RSSI output

bit 6-1 **LCXTUN<5:0>:** LCX Tuning Capacitance bit
`000000` = +0 pF (Default)
:
`111111` = +63 pF

bit 0 **R1PAR**: Register Parity Bit – set/cleared so the 9-bit register contains odd parity – an odd number of set bits

REGISTER 11-3: CONFIGURATION REGISTER 2

R/W-0	R/W-0	R/W-0	R/W-0	R/W-0	R/W-0	R/W-0	R/W-0	R/W-0
RSSIFET	CLKDIV	LCYTUN5	LCYTUN4	LCYTUN3	LCYTUN2	LCYTUN1	LCYTUN0	R2PAR
bit 8								bit 0

Legend:			
R = Readable bit	W = Writable bit	U = Unimplemented bit, read as ‘0’	
-n = Value at POR	‘1’ = Bit is set	‘0’ = Bit is cleared	x = Bit is unknown

bit 8 **RSSIFET**: Pull-down MOSFET on LFDATA pad bit (controllable by user in the RSSI mode only)
`1` = Pull-down RSSI MOSFET on
`0` = Pull-down RSSI MOSFET off

bit 7 **CLKDIV:** Carrier Clock Divide-by bit
`1` = Carrier Clock/4
`0` = Carrier Clock/1

bit 6-1 **LCYTUN<5:0>:** LCY Tuning Capacitance bit
`000000` = +0 pF (Default)
:
`111111` = +63 pF

bit 0 **R2PAR**: Register Parity Bit – set/cleared so the 9-bit register contains odd parity – an odd number of set bits

© 2007 Microchip Technology Inc.

REGISTER 11-4: CONFIGURATION REGISTER 3

U-0	U-0	R/W-0	R/W-0	R/W-0	R/W-0	R/W-0	R/W-0	R/W-0
—	—	LCZTUN5	LCZTUN4	LCZTUN3	LCZTUN2	LCZTUN1	LCZTUN0	R3PAR
bit 8								bit 0

Legend:			
R = Readable bit	W = Writable bit	U = Unimplemented bit, read as ‘0’	
-n = Value at POR	‘1’ = Bit is set	‘0’ = Bit is cleared	x = Bit is unknown

bit 8-7 **Unimplemented**: Read as ‘0’

bit 6-1 **LCZTUN<5:0>:** LCZ Tuning Capacitance bit
000000 = +0 pF (Default)
:
111111 = +63 pF

bit 0 **R3PAR**: Register Parity Bit – set/cleared so the 9-bit register contains odd parity – an odd number of set bits

REGISTER 11-5: CONFIGURATION REGISTER 4

R/W-0	R/W-0	R/W-0	R/W-0	R/W-0	R/W-0	R/W-0	R/W-0	R/W-0
LCXSEN3	LCXSEN2	LCXSEN1	LCXSEN0	LCYSEN3	LCYSEN2	LCYSEN1	LCYSEN0	R4PAR
bit 8								bit 0

Legend:			
R = Readable bit	W = Writable bit	U = Unimplemented bit, read as ‘0’	
-n = Value at POR	‘1’ = Bit is set	‘0’ = Bit is cleared	x = Bit is unknown

bit 8-5 **LCXSEN<3:0>**(1): Typical LCX Sensitivity Reduction bit
0000 = -0 dB (Default)
0001 = -2 dB
0010 = -4 dB
0011 = -6 dB
0100 = -8 dB
0101 = -10 dB
0110 = -12 dB
0111 = -14 dB
1000 = -16 dB
1001 = -18 dB
1010 = -20 dB
1011 = -22 dB
1100 = -24 dB
1101 = -26 dB
1110 = -28 dB
1111 = -30 dB

bit 4-1 **LCYSEN<3:0>**(1)**: Typical** LCY Sensitivity Reduction bit
0000 = -0 dB (Default)
:
1111 = -30 dB

bit 0 **R4PAR**: Register Parity Bit – set/cleared so the 9-bit register contains odd parity – an odd number of set bits

Note 1: Assured monotonic increment (or decrement) by design.

REGISTER 11-6: CONFIGURATION REGISTER 5

R/W-0	R/W-0	R/W-0	R/W-0	R/W-0	R/W-0	R/W-0	R/W-0	R/W-0
AUTOCHSEL	AGCSIG	MODMIN1	MODMIN0	LCZSEN3	LCZSEN2	LCZSEN1	LCZSEN0	R5PAR
bit 8								bit 0

Legend:			
R = Readable bit	W = Writable bit	U = Unimplemented bit, read as ‘0’	
-n = Value at POR	‘1’ = Bit is set	‘0’ = Bit is cleared	x = Bit is unknown

bit 8 **AUTOCHSEL**: Auto Channel Select bit
1 = Enabled – AFE selects channel(s) that has demodulator output “high” at the end of TSTAB; or otherwise, blocks the channel(s).
0 = Disabled – AFE follows channel enable/disable bits defined in Register 0

bit 7 **AGCSIG**: Demodulator Output Enable bit, after the AGC loop is active
1 = Enabled – No output until AGC is regulating at around 20 mVPP at input pins. The AGC Active Status bit is set when the AGC begins regulating.
0 = Disabled – the AFE passes signal of any level it is capable of detecting

bit 6-5 **MODMIN<1:0>**: Minimum Modulation Depth bit
00 = 50%
01 = 75%
10 = 25%
11 = 12%

bit 4-1 **LCZSEN<3:0>**(1): LCZ Sensitivity Reduction bit
0000 = -0dB (Default)
:
1111 = -30dB

bit 0 **R5PAR**: Register Parity Bit – set/cleared so the 9-bit register contains odd parity – an odd number of set bits

Note 1: Assured monotonic increment (or decrement) by design.

REGISTER 11-7: COLUMN PARITY REGISTER 6

R/W-0	R/W-0	R/W-0	R/W-0	R/W-0	R/W-0	R/W-0	R/W-0	R/W-0
COLPAR7	COLPAR6	COLPAR5	COLPAR4	COLPAR3	COLPAR2	COLPAR1	COLPAR0	R6PAR
bit 8								bit 0

Legend:			
R = Readable bit	W = Writable bit	U = Unimplemented bit, read as ‘0’	
-n = Value at POR	‘1’ = Bit is set	‘0’ = Bit is cleared	x = Bit is unknown

bit 8 **COLPAR7**: Set/Cleared so that this 8th parity bit + the sum of the Configuration register row parity bits contain an odd number of set bits.

bit 7 **COLPAR6**: Set/Cleared such that this 7th parity bit + the sum of the 7th bits in Configuration Registers 0 through 5 contain an odd number of set bits.

bit 6 **COLPAR5**: Set/Cleared such that this 6th parity bit + the sum of the 6th bits in Configuration Registers 0 through 5 contain an odd number of set bits.

bit 5 **COLPAR4**: Set/Cleared such that this 5th parity bit + the sum of the 5th bits in Configuration Registers 0 through 5 contain an odd number of set bits.

bit 4 **COLPAR3**: Set/Cleared such that this 4th parity bit + the sum of the 4th bits in Configuration Registers 0 through 5 contain an odd number of set bits.

bit 3 **COLPAR2**: Set/Cleared such that this 3rd parity bit + the sum of the 3rd bits in Configuration Registers 0 through 5 contain an odd number of set bits.

bit 2 **COLPAR1**: Set/Cleared such that this 2nd parity bit + the sum of the 2nd bits in Configuration Registers 0 through 5 contain an odd number of set bits.

bit 1 **COLPAR0**: Set/Cleared such that this 1st parity bit + the sum of the 1st bits in Configuration Registers 0 through 5 contain an odd number of set bits.

bit 0 **R6PAR**: Register Parity bit – set/cleared so the 9-bit register contains odd parity – an odd number of set bits

© 2007 Microchip Technology Inc.

REGISTER 11-8: AFE STATUS REGISTER 7

R-0	R-0	R-0	R-0	R-0	R-0	R-0	R-0	R-0
CHZACT	CHYACT	CHXACT	AGCACT	WAKEZ	WAKEY	WAKEX	ALARM	PEI
bit 8								bit 0

Legend:			
R = Readable bit	W = Writable bit	U = Unimplemented bit, read as ‘0’	
-n = Value at POR	‘1’ = Bit is set	‘0’ = Bit is cleared	x = Bit is unknown

bit 8 **CHZACT**: Channel Z Active[(1)] bit (cleared via Soft Reset)
1 = Channel Z is passing data after TAGC
0 = Channel Z is not passing data after TAGC

bit 7 **CHYACT**: Channel Y Active[(1)] bit (cleared via Soft Reset)
1 = Channel Y is passing data after TAGC
0 = Channel Y is not passing data after TAGC

bit 6 **CHXACT**: Channel X Active[(1)] bit (cleared via Soft Reset)
1 = Channel X is passing data after TAGC
0 = Channel X is not passing data after TAGC

bit 5 **AGCACT**: AGC Active Status bit (real time, cleared via Soft Reset)
1 = AGC is active (Input signal is strong). AGC is active when input signal level is approximately > 20 mVPP range.
0 = AGC is inactive (Input signal is weak)

bit 4 **WAKEZ**: Wake-up Channel Z Indicator Status bit (cleared via Soft Reset)
1 = Channel Z caused a AFE wake-up (passed ÷64 clock counter)
0 = Channel Z did not cause a AFE wake-up

bit 3 **WAKEY**: Wake-up Channel Y Indicator Status bit (cleared via Soft Reset)
1 = Channel Y caused a AFE wake-up (passed ÷64 clock counter)
0 = Channel Y did not cause a AFE wake-up

bit 2 **WAKEX**: Wake-up Channel X Indicator Status bit (cleared via Soft Reset)
1 = Channel X caused a AFE wake-up (passed ÷64 clock counter)
0 = Channel X did not cause a AFE wake-up

bit 1 **ALARM**: Indicates whether an Alarm timer time-out has occurred (cleared via read “Status Register command”)
1 = The Alarm timer time-out has occurred. It may cause the $\overline{\text{ALERT}}$ output to go low depending on the state of bit 4 of the Configuration register 0
0 = The Alarm timer is not timed out

bit 0 **PEI**: Parity Error Indicator bit – indicates whether a Configuration register parity error has occurred (real time)
1 = A parity error has occurred and caused the $\overline{\text{ALERT}}$ output to go low
0 = A parity error has not occurred

Note 1: Bit is high whenever channel is passing data. Bit is low in Standby mode.

See Table 11-7 for the bit conditions of the AFE Status Register after various SPI commands and the AFE Power-on Reset.

TABLE 11-7: AFE STATUS REGISTER BIT CONDITION (AFTER POWER-ON RESET AND VARIOUS SPI COMMANDS)

Condition	Bit 8	Bit 7	Bit 6	Bit 5	Bit 4	Bit 3	Bit 2	Bit 1	Bit 0
	CHZACT	CHYACT	CHXACT	AGCACT	WAKEZ	WAKEY	WAKEX	ALARM	PEI
POR	0	0	0	0	0	0	0	0	1
Read Command (STATUS Register only)	u	u	u	u	u	u	u	0	u
Sleep Command	u	u	u	u	u	u	u	u	u
Soft Reset Executed[(1)]	0	0	0	0	0	0	0	u	u

Legend: u = unchanged

Note 1: See **Section 11.20 “Soft Reset”** and **Section 11.32.2.4 “Soft Reset Command”** for the condition of Soft Reset execution.

NOTES:

© 2007 Microchip Technology Inc.

12.0 SPECIAL FEATURES OF THE CPU

The PIC12F635/PIC16F636/639 has a host of features intended to maximize system reliability, minimize cost through elimination of external components, provide power saving features and offer code protection.

These features are:

- Reset
  - Power-on Reset (POR)
  - Wake-up Reset (WUR)
  - Power-up Timer (PWRT)
  - Oscillator Start-up Timer (OST)
  - Brown-out Reset (BOR)
- Interrupts
- Watchdog Timer (WDT)
- Oscillator selection
- Sleep
- Code protection
- ID Locations
- In-Circuit Serial Programming™

The PIC12F635/PIC16F636/639 has two timers that offer necessary delays on power-up. One is the Oscillator Start-up Timer (OST), intended to keep the chip in Reset until the crystal oscillator is stable. The other is the Power-up Timer (PWRT), which provides a fixed delay of 64 ms (nominal) on power-up only, designed to keep the part in Reset while the power supply stabilizes. There is also circuitry to reset the device if a brown-out occurs, which can use the Power-up Timer to provide at least a nominal 64 ms Reset. With these three functions on-chip, most applications need no external Reset circuitry.

The Sleep mode is designed to offer a very low-current Power-down mode. The user can wake-up from Sleep through:

- External Reset
- Watchdog Timer Wake-up
- An Interrupt

Several oscillator options are also made available to allow the part to fit the application. The INTOSC option saves system cost while the LP crystal option saves power. A set of Configuration bits are used to select various options (see Register 12-1).

12.1 Configuration Bits

The Configuration Word bits can be programmed (read as '0'), or left unprogrammed (read as '1') to select various device configurations as shown in Register 12-1. These bits are mapped in program memory location 2007h.

Note:	Address 2007h is beyond the user program memory space. It belongs to the special configuration memory space (2000h-3FFFh), which can be accessed only during programming. See *"PIC12F6XX/16F6XX Memory Programming Specification"* (DS41204) for more information.

REGISTER 12-1: CONFIG: CONFIGURATION WORD REGISTER

—	—	—	$\overline{\text{WURE}}$	FCMEN	IESO	BOREN1	BOREN0
bit 15							bit 8

$\overline{\text{CPD}}$	$\overline{\text{CP}}$	MCLRE	$\overline{\text{PWRTE}}$	WDTE	FOSC2	FOSC1	FOSC0
bit 7							bit 0

Legend:			
R = Readable bit	W = Writable bit	P = Programmable'	U = Unimplemented bit, read as '0'
-n = Value at POR	'1' = Bit is set	'0' = Bit is cleared	x = Bit is unknown

bit 15-13 **Unimplemented**: Read as '1'

bit 12 **$\overline{\text{WURE}}$:** Wake-up Reset Enable bit
1 = Standard wake-up and continue enabled
0 = Wake-up and Reset enabled

bit 11 **FCMEN:** Fail-Safe Clock Monitor Enabled bit
1 = Fail-Safe Clock Monitor is enabled
0 = Fail-Safe Clock Monitor is disabled

bit 10 **IESO:** Internal External Switchover bit
1 = Internal External Switchover mode is enabled
0 = Internal External Switchover mode is disabled

bit 9-8 **BOREN<1:0>:** Brown-out Reset Selection bits(1)
11 = BOR enabled, SBOREN bit disabled
10 = BOR enabled during operation and disabled in Sleep, SBOREN bit disabled
01 = BOR controlled by SBOREN bit of the PCON register
00 = BOR and SBOREN bits disabled

bit 7 **$\overline{\text{CPD}}$:** Data Code Protection bit(2)
1 = Data memory code protection is disabled
0 = Data memory code protection is enabled

bit 6 **$\overline{\text{CP}}$:** Code Protection bit(3)
1 = Program memory code protection is disabled
0 = Program memory code protection is enabled

bit 5 **MCLRE:** $\overline{\text{MCLR}}$ pin function select bit(4)
1 = $\overline{\text{MCLR}}$ pin function is $\overline{\text{MCLR}}$
0 = $\overline{\text{MCLR}}$ pin function is digital input, $\overline{\text{MCLR}}$ internally tied to V_{DD}

bit 4 **$\overline{\text{PWRTE}}$:** Power-up Timer Enable bit
1 = PWRT disabled
0 = PWRT enabled

bit 3 **WDTE:** Watchdog Timer Enable bit
1 = WDT enabled
0 = WDT disabled and can be enabled by SWDTEN bit of the WDTCON register

bit 2-0 **FOSC<2:0>:** Oscillator Selection bits
111 = EXTRC oscillator: External RC on RA5/OSC1/CLKIN, CLKOUT function on RA4/OSC2/CLKOUT pin
110 = EXTRCIO oscillator: External RC on RA5/OSC1/CLKIN, I/O function on RA4/OSC2/CLKOUT pin
101 = INTOSC oscillator: CLKOUT function on RA4/OSC2/CLKOUT pin, I/O function on RA5/OSC1/CLKIN
100 = INTOSCIO oscillator: I/O function on RA4/OSC2/CLKOUT pin, I/O function on RA5/OSC1/CLKIN
011 = EC: I/O function on RA4/OSC2/CLKOUT pin, CLKIN on RA5/OSC1/CLKIN
010 = HS oscillator: High-speed crystal/resonator on RA4/OSC2/CLKOUT and RA5/OSC1/CLKIN
001 = XT oscillator: Crystal/resonator on RA4/OSC2/CLKOUT and RA5/OSC1/CLKIN
000 = LP oscillator: Low-power crystal on RA4/OSC2/CLKOUT and RA5/OSC1/CLKIN

Note 1: Enabling Brown-out Reset does not automatically enable Power-up Timer.
2: The entire data EEPROM will be erased when the code protection is turned off.
3: The entire program memory will be erased when the code protection is turned off.
4: When $\overline{\text{MCLR}}$ is asserted in INTOSC or RC mode, the internal clock oscillator is disabled.

© 2007 Microchip Technology Inc.

12.2 Reset

The PIC12F635/PIC16F636/639 differentiates between various kinds of Reset:

a) Power-on Reset (POR)
b) Wake-up Reset (WUR)
c) WDT Reset during normal operation
d) WDT Reset during Sleep
e) $\overline{\text{MCLR}}$ Reset during normal operation
f) $\overline{\text{MCLR}}$ Reset during Sleep
g) Brown-out Reset (BOR)

Some registers are not affected in any Reset condition; their status is unknown on POR and unchanged in any other Reset. Most other registers are reset to a "Reset state" on:

- Power-on Reset
- $\overline{\text{MCLR}}$ Reset
- $\overline{\text{MCLR}}$ Reset during Sleep
- WDT Reset
- Brown-out Reset

They are not affected by a WDT wake-up since this is viewed as the resumption of normal operation. $\overline{\text{TO}}$ and $\overline{\text{PD}}$ bits are set or cleared differently in different Reset situations, as indicated in Table 12-3. These bits are used in software to determine the nature of the Reset. See Table 12-4 for a full description of Reset states of all registers.

A simplified block diagram of the On-Chip Reset Circuit is shown in Figure 12-1.

The $\overline{\text{MCLR}}$ Reset path has a noise filter to detect and ignore small pulses. See **Section 15.0 "Electrical Specifications"** for pulse width specifications.

FIGURE 12-1: SIMPLIFIED BLOCK DIAGRAM OF ON-CHIP RESET CIRCUIT

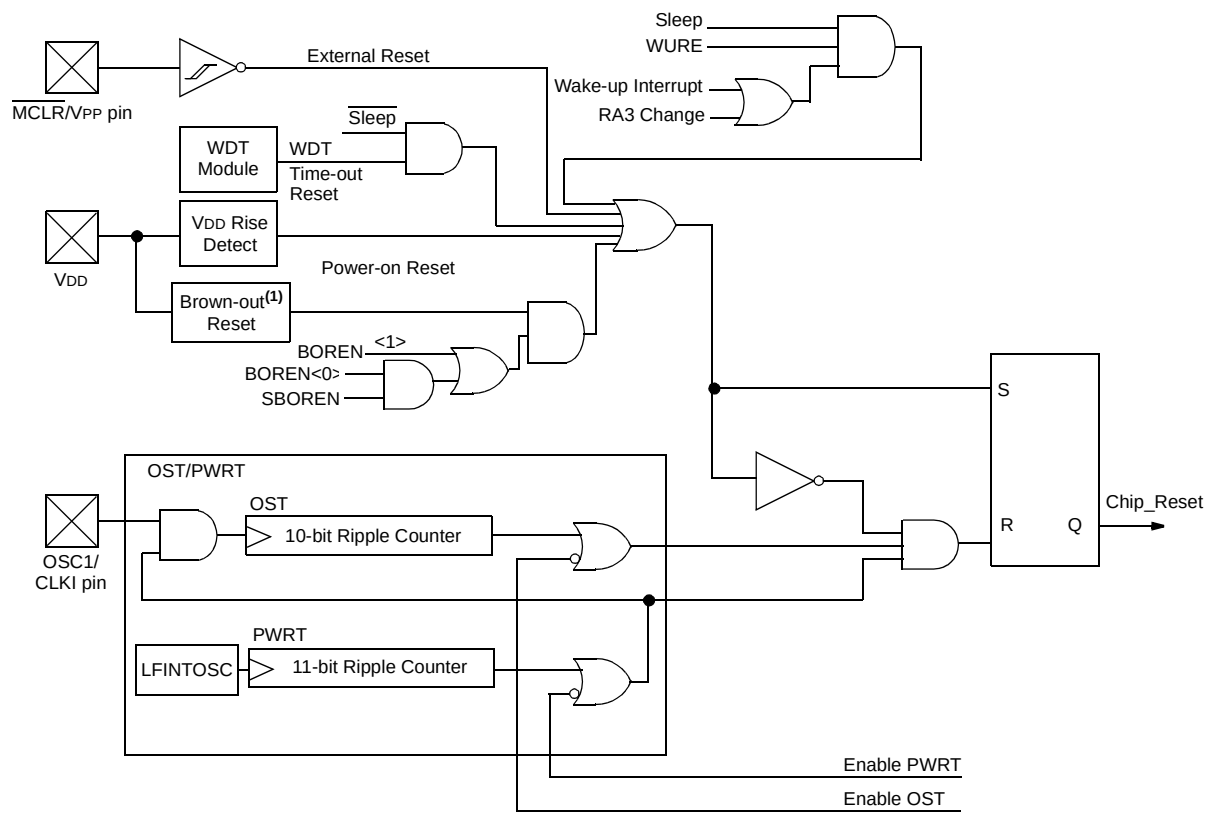

Note 1: Refer to the Configuration Word register (Register 12-1).

12.3 Power-on Reset

The on-chip POR circuit holds the chip in Reset until V_{DD} has reached a high enough level for proper operation. To take advantage of the POR, simply connect the $\overline{MCLR}$ pin through a resistor to V_{DD}. This will eliminate external RC components usually needed to create Power-on Reset. A maximum rise time for V_{DD} is required. See **Section 15.0 "Electrical Specifications"** for details. If the BOR is enabled, the maximum rise time specification does not apply. The BOR circuitry will keep the device in Reset until V_{DD} reaches V_{BOD} (see **Section 12.6 "Brown-out Reset (BOR)"**).

Note:	The POR circuit does not produce an internal Reset when V_{DD} declines. To re-enable the POR, V_{DD} must reach V_{SS} for a minimum of 100 µs.

When the device starts normal operation (exits the Reset condition), device operating parameters (i.e., voltage, frequency, temperature, etc.) must be met to ensure operation. If these conditions are not met, the device must be held in Reset until the operating conditions are met.

For additional information, refer to the Application Note *AN607, "Power-up Trouble Shooting"* (DS00607).

12.4 Wake-up Reset (WUR)

The PIC12F635/PIC16F636/639 has a modified wake-up from Sleep mechanism. When waking from Sleep, the WUR function resets the device and releases Reset when V_{DD} reaches an acceptable level.

If the $\overline{WURE}$ bit is enabled ('0') in the Configuration Word register, the device will Wake-up Reset from Sleep through one of the following events:

1. On any event that causes a wake-up event. The peripheral must be enabled to generate an interrupt or wake-up, GIE state is ignored.
2. When WURE is enabled, RA3 will always generate an interrupt-on-change signal during Sleep.

The $\overline{WUR}$, $\overline{POR}$ and $\overline{BOR}$ bits in the PCON register and the $\overline{TO}$ and $\overline{PD}$ bits in the STATUS register can be used to determine the cause of device Reset.

To allow WUR upon RA3 change:

1. Enable the WUR function, $\overline{WURE}$ Configuration Bit = 0.
2. Enable RA3 as an input, MCLRE Configuration Bit = 0.
3. Read PORTA to establish the current state of RA3.
4. Execute SLEEP instruction.
5. When RA3 changes state, the device will wake-up and then reset. The $\overline{WUR}$ bit in PCON will be cleared to '0'.

12.4.1 POWER-UP TIMER (PWRT)

The Power-up Timer provides a fixed 64 ms (nominal) time-out on power-up only, from POR or Brown-out Reset. The Power-up Timer operates from the 31 kHz LFINTOSC oscillator. For more information, see **Section 3.5 "Internal Clock Modes"**. The chip is kept in Reset as long as PWRT is active. The PWRT delay allows the V_{DD} to rise to an acceptable level. A Configuration bit, $\overline{PWRTE}$, can disable (if set) or enable (if cleared or programmed) the Power-up Timer. The Power-up Timer should be enabled when Brown-out Reset is enabled, although it is not required.

The Power-up Timer delay will vary from chip-to-chip due to:

- V_{DD} variation
- Temperature variation
- Process variation

See DC parameters for details (**Section 15.0 "Electrical Specifications"**).

Note:	Voltage spikes below V_{SS} at the $\overline{MCLR}$ pin, inducing currents greater than 80 mA, may cause latch-up. Thus, a series resistor of 50-100 Ω should be used when applying a "low" level to the $\overline{MCLR}$ pin, rather than pulling this pin directly to V_{SS}.

12.5 $\overline{MCLR}$

PIC12F635/PIC16F636/639 has a noise filter in the $\overline{MCLR}$ Reset path. The filter will ignore small pulses.

It should be noted that a WDT Reset does not drive $\overline{MCLR}$ pin low. See Figure 12-2 for the recommended $\overline{MCLR}$ circuit.

An internal $\overline{MCLR}$ option is enabled by clearing the MCLRE bit in the Configuration Word register. When cleared, $\overline{MCLR}$ is internally tied to V_{DD} and an internal weak pull-up is enabled for the $\overline{MCLR}$ pin. In-Circuit Serial Programming is not affected by selecting the internal $\overline{MCLR}$ option.

© 2007 Microchip Technology Inc.

FIGURE 12-2: RECOMMENDED $\overline{\text{MCLR}}$ CIRCUIT

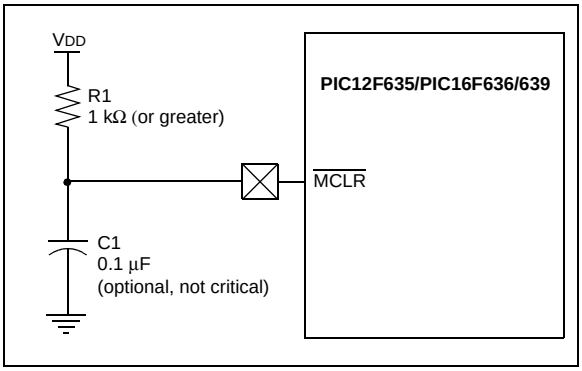

12.6 Brown-out Reset (BOR)

The BOREN0 and BOREN1 bits in the Configuration Word register select one of four BOR modes. Two modes have been added to allow software or hardware control of the BOR enable. When BOREN<1:0> = 01, the SBOREN bit of the PCON register enables/disables the BOR allowing it to be controlled in software. By selecting BOREN<1:0>, the BOR is automatically disabled in Sleep to conserve power and enabled on wake-up. In this mode, the SBOREN bit is disabled. See Register 12-1 for the Configuration Word definition.

If V_{DD} falls below V_{BOD} for greater than parameter (T_{BOD}) (see **Section 15.0 "Electrical Specifications"**), the Brown-out situation will reset the device. This will occur regardless of V_{DD} slew rate. A Reset is not ensured to occur if V_{DD} falls below V_{BOD} for less than parameter (T_{BOD}).

On any Reset (Power-on, Brown-out Reset, Watchdog Timer, etc.), the chip will remain in Reset until V_{DD} rises above V_{BOD} (see Figure 12-3). The Power-up Timer will now be invoked, if enabled and will keep the chip in Reset an additional nominal 64 ms.

Note:	The Power-up Timer is enabled by the $\overline{\text{PWRTE}}$ bit in the Configuration Word register.

If V_{DD} drops below V_{BOD} while the Power-up Timer is running, the chip will go back into a Brown-out Reset and the Power-up Timer will be re-initialized. Once V_{DD} rises above V_{BOD}, the Power-up Timer will execute a 64 ms Reset.

FIGURE 12-3: BROWN-OUT RESET SITUATIONS

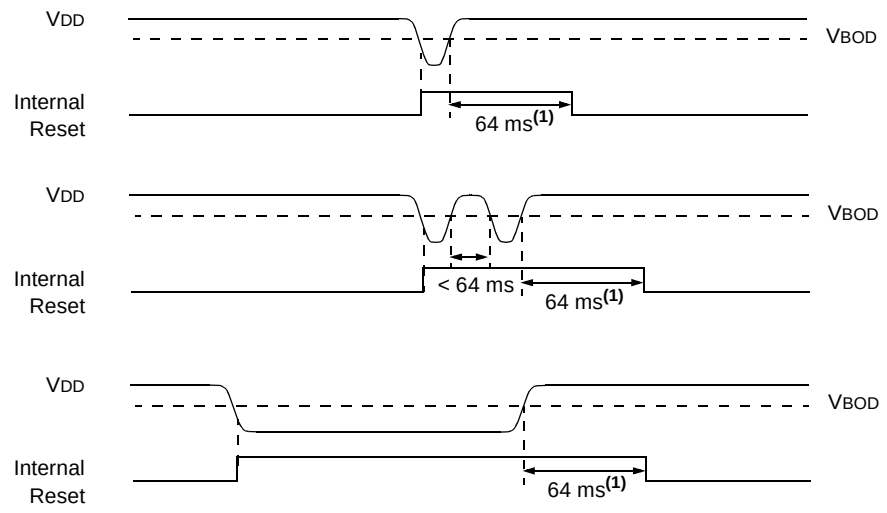

Note 1: Nominal 64 ms delay only if $\overline{\text{PWRTE}}$ bit is programmed to '0'.

© 2007 Microchip Technology Inc.

12.7 Time-out Sequence

On power-up, the time-out sequence is as follows: first, PWRT time-out is invoked after POR has expired, then OST is activated after the PWRT time-out has expired. The total time-out will vary based on oscillator Configuration and $\overline{\text{PWRTE}}$ bit status. For example, in EC mode with $\overline{\text{PWRTE}}$ bit erased (PWRT disabled), there will be no time-out at all. Figure 12-4, Figure 12-5 and Figure 12-6 depict time-out sequences. The device can execute code from the INTOSC, while OST is active, by enabling Two-Speed Start-up or Fail-Safe Clock Monitor (See **Section 3.7.2 "Two-Speed Start-up Sequence"** and **Section 3.8 "Fail-Safe Clock Monitor"**).

Since the time-outs occur from the POR pulse, if $\overline{\text{MCLR}}$ is kept low long enough, the time-outs will expire. Then bringing $\overline{\text{MCLR}}$ high will begin execution immediately (see Figure 12-5). This is useful for testing purposes or to synchronize more than one PIC12F635/PIC16F636/639 device operating in parallel.

Table 12-5 shows the Reset conditions for some special registers, while Table 12-4 shows the Reset conditions for all the registers.

12.8 Power Control (PCON) Register

The Power Control register, PCON (address 8Eh), has two Status bits to indicate what type of Reset that last occurred.

Bit 0 is $\overline{\text{BOR}}$ (Brown-out). $\overline{\text{BOR}}$ is unknown on Power-on Reset. It must then be set by the user and checked on subsequent Resets to see if $\overline{\text{BOR}}$ = 0, indicating that a Brown-out has occurred. The $\overline{\text{BOR}}$ Status bit is a "don't care" and is not necessarily predictable if the brown-out circuit is disabled (BOREN<1:0> = 00 in the Configuration Word register).

Bit 1 is $\overline{\text{POR}}$ (Power-on Reset). It is a '0' on Power-on Reset and unaffected otherwise. The user must write a '1' to this bit following a Power-on Reset. On a subsequent Reset, if $\overline{\text{POR}}$ is '0', it will indicate that a Power-on Reset has occurred (i.e., V_{DD} may have gone too low).

For more information, see **Section 4.2.3 "Ultra Low-Power Wake-up"** and **Section 12.6 "Brown-out Reset (BOR)"**.

TABLE 12-1: TIME-OUT IN VARIOUS SITUATIONS

Oscillator Configuration	Power-up		Brown-out Reset		Wake-up from Sleep
	$\overline{\text{PWRTE}}$ = 0	$\overline{\text{PWRTE}}$ = 1	$\overline{\text{PWRTE}}$ = 0	$\overline{\text{PWRTE}}$ = 1	
XT, HS, LP	T_{PWRT} + 1024 • T_{OSC}	1024 • T_{OSC}	T_{PWRT} + 1024 • T_{OSC}	1024 • T_{OSC}	1024 • T_{OSC}
RC, EC, INTOSC	T_{PWRT}	—	T_{PWRT}	—	—

TABLE 12-2: SUMMARY OF REGISTERS ASSOCIATED WITH BROWN-OUT RESET

Name	Bit 9	Bit 8	Bit 7	Bit 6	Bit 5	Bit 4	Bit 3	Bit 2	Bit 1	Bit 0	Value on POR, BOR	Value on all other Resets(1)
CONFIG(2)	BOREN1	BOREN0	$\overline{\text{CPD}}$	$\overline{\text{CP}}$	MCLRE	$\overline{\text{PWRTE}}$	WDTE	FOSC2	FOSC1	FOSC0	—	—
PCON			—	—	ULPWUE	SBOREN	$\overline{\text{WUR}}$	—	$\overline{\text{POR}}$	$\overline{\text{BOR}}$	--01 --qq	--0u --uu
STATUS			IRP	RP1	RP0	$\overline{\text{TO}}$	$\overline{\text{PD}}$	Z	DC	C	0001 1xxx	000q quuu

Legend: u = unchanged, x = unknown, – = unimplemented bit, reads as '0', q = value depends on condition. Shaded cells are not used by BOR.
Note 1: Other (non Power-up) Resets include $\overline{\text{MCLR}}$ Reset and Watchdog Timer Reset during normal operation.
2: See Configuration Word register (Register 12-1) for operation of all register bits.

TABLE 12-3: PCON BITS AND THEIR SIGNIFICANCE

$\overline{\text{POR}}$	$\overline{\text{BOR}}$	$\overline{\text{WUR}}$	$\overline{\text{TO}}$	$\overline{\text{PD}}$	Condition
0	x	x	1	1	Power-on Reset
u	0	u	1	1	Brown-out Reset
u	u	u	0	u	WDT Reset
u	u	u	0	0	WDT Wake-up
u	u	u	u	u	$\overline{\text{MCLR}}$ Reset during normal operation
u	u	u	1	0	$\overline{\text{MCLR}}$ Reset during Sleep
u	u	0	1	0	Wake-up Reset during Sleep
u	0	u	1	1	Brown-out Reset during Sleep

Legend: u = unchanged, x = unknown

FIGURE 12-4: TIME-OUT SEQUENCE ON POWER-UP (DELAYED $\overline{\text{MCLR}}$)

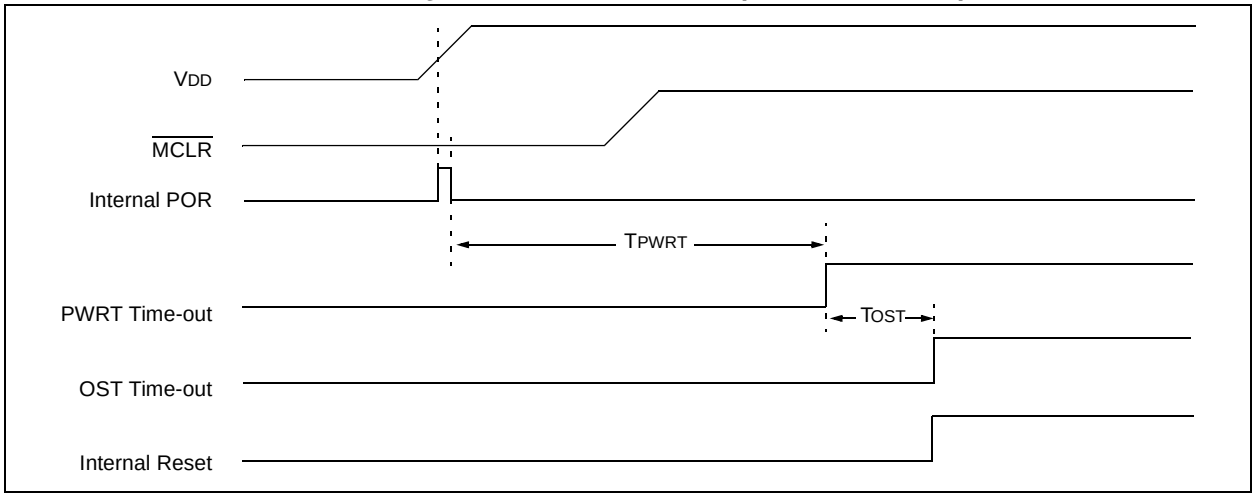

FIGURE 12-5: TIME-OUT SEQUENCE ON POWER-UP (DELAYED $\overline{\text{MCLR}}$)

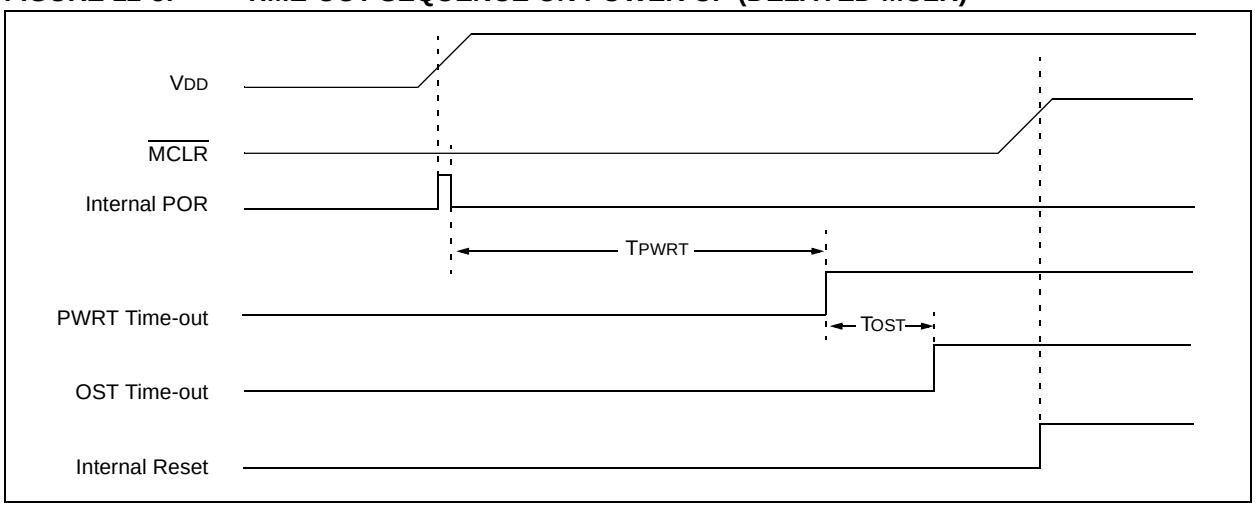

FIGURE 12-6: TIME-OUT SEQUENCE ON POWER-UP ($\overline{\text{MCLR}}$ WITH VDD)

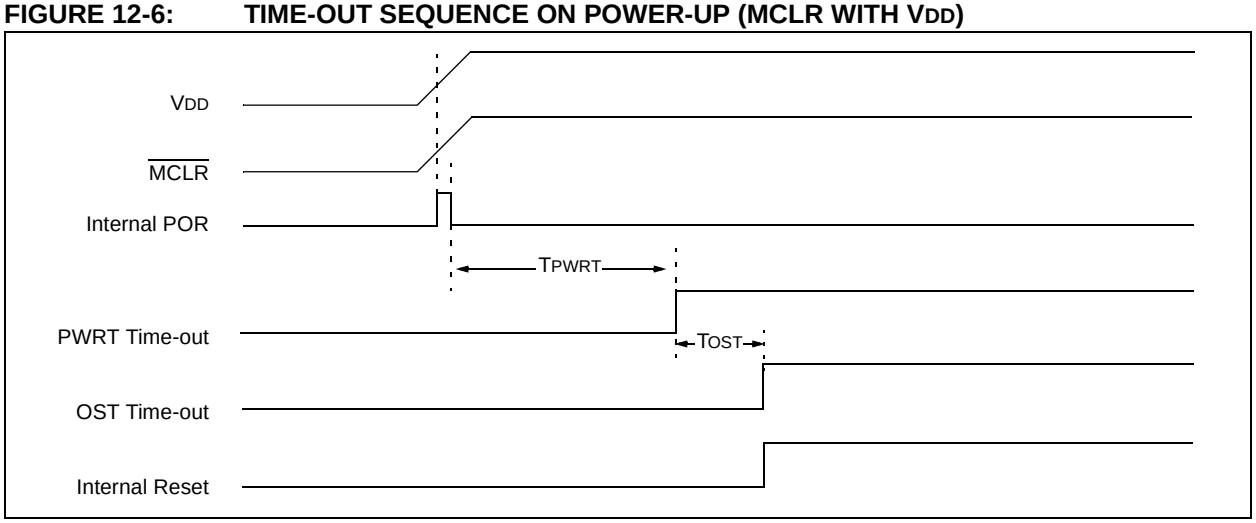

© 2007 Microchip Technology Inc.

TABLE 12-4: INITIALIZATION CONDITION FOR REGISTERS

Register	Address	Power-on Reset Wake-up Reset	$\overline{\text{MCLR}}$ Reset WDT Reset Brown-out Reset(1) Wake-up Reset	Wake-up from Sleep through Interrupt Wake-up from Sleep through WDT Time-out
W	—	xxxx xxxx	uuuu uuuu	uuuu uuuu
INDF	00h/80h	xxxx xxxx	xxxx xxxx	uuuu uuuu
TMR0	01h	xxxx xxxx	uuuu uuuu	uuuu uuuu
PCL	02h/82h	0000 0000	0000 0000	PC + 1(3)
STATUS	03h/83h	0001 1xxx	000q quuu(4)	uuuq quuu(4)
FSR	04h/84h	xxxx xxxx	uuuu uuuu	uuuu uuuu
PORTA	05h	--xx xx00	--00 0000	--uu uu00
PORTC(6)	07h	--xx xx00	--00 0000	--uu uu00
PCLATH	0Ah/8Ah	---0 0000	---0 0000	---u uuuu
INTCON	0Bh/8Bh	0000 000x	0000 000x	uuuu uuuu(2)
PIR1	0Ch	0000 00-0	0000 00-0	uuuu uu-u(2)
TMR1L	0Eh	xxxx xxxx	uuuu uuuu	uuuu uuuu
TMR1H	0Fh	xxxx xxxx	uuuu uuuu	uuuu uuuu
T1CON	10h	0000 0000	uuuu uuuu	-uuu uuuu
WDTCON	18h	---0 1000	---0 1000	---u uuuu
CMCON0	19h	0000 0000	0000 0000	uuuu uuuu
CMCON1	1Ah	---- --10	---- --10	---- --uu
OPTION_REG	81h	1111 1111	1111 1111	uuuu uuuu
TRISA	85h	--11 1111	--11 1111	--uu 1uuu
TRISC(6)	87h	--11 1111	--11 1111	--uu 1uuu
PIE1	8Ch	0000 00-0	0000 00-0	uuuu uu-u
PCON	8Eh	--01 q-qq	--0u u-uu(1,5)	--0u u-uu
OSCCON	8Fh	-110 q000	-110 q000	-uuu uuuu
OSCTUNE	90h	---0 0000	---u uuuu	---u uuuu
WPUDA	95h	--11 -111	--11 -111	uuuu uuuu
IOCA	96h	--00 0000	--00 0000	--uu uuuu
WDA	97h	--11 -111	--11 -111	uuuu uuuu
VRCON	99h	0-0- 0000	0-0- 0000	u-u- uuuu
EEDAT	9Ah	0000 0000	0000 0000	uuuu uuuu
EEADR	9Bh	0000 0000	0000 0000	uuuu uuuu
EECON1	9Ch	---- x000	---- q000	---- uuuu
EECON2	9Dh	---- ----	---- ----	---- ----
ADRESL	9Eh	xxxx xxxx	uuuu uuuu	uuuu uuuu
ADCON1	9Fh	-000 ----	-000 ----	-uuu ----
LVDCON	94h	--00 -000	--00 -000	--uu -uuu
CRCON	110h	00-- --00	00-- --00	uu-- --uu

Legend: u = unchanged, x = unknown, - = unimplemented bit, reads as '0', q = value depends on condition.

Note 1: If VDD goes too low, Power-on Reset will be activated and registers will be affected differently.

2: One or more bits in INTCON and/or PIR1 will be affected (to cause wake-up).

3: When the wake-up is due to an interrupt and the GIE bit is set, the PC is loaded with the interrupt vector (0004h).

4: See Table 12-5 for Reset value for specific condition.

5: If Reset was due to brown-out, then bit 0 = 0. All other Resets will cause bit 0 = u.

6: PIC16F636/639 only.

TABLE 12-5: INITIALIZATION CONDITION FOR SPECIAL REGISTERS

Condition	Program Counter	Status Register	PCON Register
Power-on Reset	000h	0001 1xxx	--01 --0x
$\overline{\text{MCLR}}$ Reset during normal operation	000h	000u uuuu	--0u --uu
$\overline{\text{MCLR}}$ Reset during Sleep	000h	0001 0uuu	--0u --uu
WDT Reset	000h	0000 uuuu	--0u --uu
WDT Wake-up	PC + 1	uuu0 0uuu	--uu --uu
Brown-out Reset	000h	0001 1uuu	--01 --10
Interrupt Wake-up from Sleep	PC + 1(1)	uuu1 0uuu	--uu --uu
Wake-up Reset	000h	0001 1xxx	--01 --0x

Legend: u = unchanged, x = unknown, – = unimplemented bit, reads as '0'.

Note 1: When the wake-up is due to an interrupt and the Global Interrupt Enable bit, GIE, is set, the PC is loaded with the interrupt vector (0004h) after execution of PC + 1.

© 2007 Microchip Technology Inc.

12.9 Interrupts

The PIC12F635/PIC16F636/639 has multiple interrupt sources:

- External Interrupt RA2/INT
- Timer0 Overflow Interrupt
- PORTA Change Interrupts
- 2 Comparator Interrupts
- Timer1 Overflow Interrupt
- EEPROM Data Write Interrupt
- Fail-Safe Clock Monitor Interrupt

The Interrupt Control register (INTCON) and Peripheral Interrupt Request Register 1 (PIR1) record individual interrupt requests in flag bits. The INTCON register also has individual and global interrupt enable bits.

A Global Interrupt Enable bit GIE of the INTCON register enables (if set) all unmasked interrupts, or disables (if cleared) all interrupts. Individual interrupts can be disabled through their corresponding enable bits in the INTCON register and PIE1 register. GIE is cleared on Reset.

The Return from Interrupt instruction, `RETFIE`, exits the interrupt routine, as well as sets the GIE bit, which re-enables unmasked interrupts.

The following interrupt flags are contained in the INTCON register:

- INT Pin Interrupt
- PORTA Change Interrupt
- TMR0 Overflow Interrupt

The peripheral interrupt flags are contained in the special register, PIR1. The corresponding interrupt enable bit is contained in special register, PIE1.

The following interrupt flags are contained in the PIR1 register:

- EEPROM Data Write Interrupt
- 2 Comparator Interrupts
- Timer1 Overflow Interrupt
- Fail-Safe Clock Monitor Interrupt

When an interrupt is serviced:

- The GIE is cleared to disable any further interrupt.
- The return address is pushed onto the stack.
- The PC is loaded with 0004h.

For external interrupt events, such as the INT pin or PORTA change interrupt, the interrupt latency will be three or four instruction cycles. The exact latency depends upon when the interrupt event occurs (see Figure 12-8). The latency is the same for one or two-cycle instructions. Once in the Interrupt Service Routine, the source(s) of the interrupt can be determined by polling the interrupt flag bits. The interrupt flag bit(s) must be cleared in software before re-enabling interrupts to avoid multiple interrupt requests.

Note 1:	Individual interrupt flag bits are set, regardless of the status of their corresponding mask bit or the GIE bit.
2:	When an instruction that clears the GIE bit is executed, any interrupts that were pending for execution in the next cycle are ignored. The interrupts, which were ignored, are still pending to be serviced when the GIE bit is set again.

For additional information on Timer1, comparators or data EEPROM modules, refer to the respective peripheral section.

12.9.1 RA2/INT INTERRUPT

External interrupt on RA2/INT pin is edge-triggered; either rising if the INTEDG bit of the OPTION register is set, or falling if the INTEDG bit is clear. When a valid edge appears on the RA2/INT pin, the INTF bit of the INTCON register is set. This interrupt can be disabled by clearing the INTE control bit of the INTCON register. The INTF bit must be cleared in software in the Interrupt Service Routine before re-enabling this interrupt. The RA2/INT interrupt can wake-up the processor from Sleep if the INTE bit was set prior to going into Sleep. The status of the GIE bit decides whether or not the processor branches to the interrupt vector following wake-up (0004h). See **Section 12.12 "Power-Down Mode (Sleep)"** for details on Sleep and Figure 12-10 for timing of wake-up from Sleep through RA2/INT interrupt.

Note:	The CMCON0 (19h) register must be initialized to configure an analog channel as a digital input. Pins configured as analog inputs will read '0'.

12.9.2 TIMER INTERRUPT

An overflow (FFh → 00h) in the TMR0 register will set the T0IF bit of the INTCON register. The interrupt can be enabled/disabled by setting/clearing T0IE bit of the INTCON register. See **Section 5.0 "Timer0 Module"** for operation of the Timer0 module.

12.9.3 PORTA INTERRUPT

An input change on PORTA change sets the RAIF bit of the INTCON register. The interrupt can be enabled/disabled by setting/clearing the RAIE bit of the INTCON register. Plus, individual pins can be configured through the IOCA register.

Note:	If a change on the I/O pin should occur when the read operation is being executed (start of the Q2 cycle), then the RAIF interrupt flag may not get set.

FIGURE 12-7: INTERRUPT LOGIC

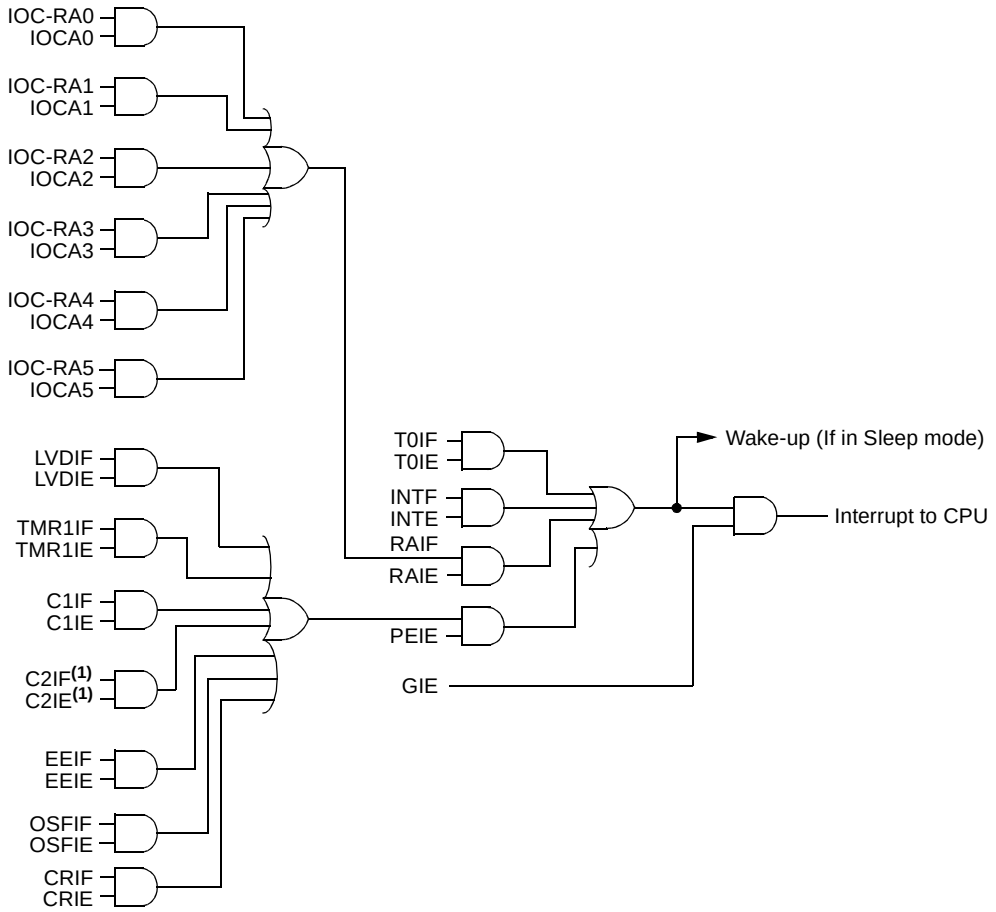

Note 1: PIC16F636/639 only.

© 2007 Microchip Technology Inc.

FIGURE 12-8: INT PIN INTERRUPT TIMING

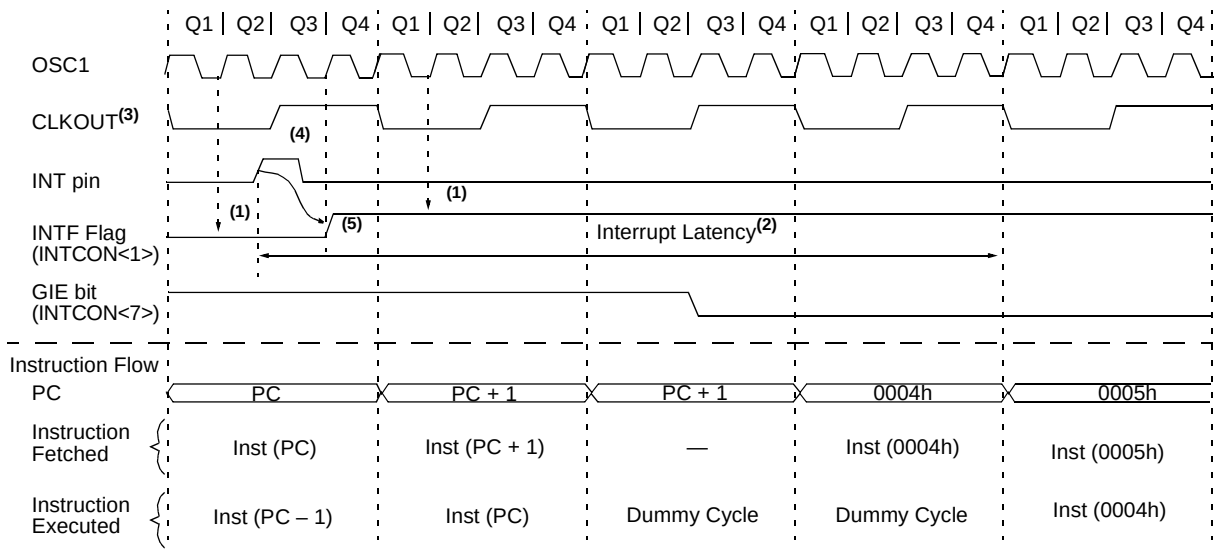

Note 1: INTF flag is sampled here (every Q1).

2: Asynchronous interrupt latency = 3-4 TCY. Synchronous latency = 3 TCY, where TCY = instruction cycle time. Latency is the same whether Inst (PC) is a single cycle or a 2-cycle instruction.

3: CLKOUT is available only in INTOSC and RC Oscillator modes.

4: For minimum width of INT pulse, refer to AC specifications in **Section 15.0 "Electrical Specifications"**.

5: INTF is enabled to be set any time during the Q4-Q1 cycles.

TABLE 12-6: SUMMARY OF REGISTERS ASSOCIATED WITH INTERRUPTS

Name	Bit 7	Bit 6	Bit 5	Bit 4	Bit 3	Bit 2	Bit 1	Bit 0	Value on: POR, BOR	Value on all other Resets
INTCON	GIE	PEIE	T0IE	INTE	RAIE	T0IF	INTF	RAIF	0000 000x	0000 000x
IOCA	—	—	IOCA5	IOCA4	IOCA3	IOCA2	IOCA1	IOCA0	--00 0000	--00 0000
PIR1	EEIF	LVDIF	CRIF	C2IF(1)	C1IF	OSFIF	—	TMR1IF	0000 00-0	0000 00-0
PIE1	EEIE	LVDIE	CRIE	C2IE(1)	C1IE	OSFIE	—	TMR1IE	0000 00-0	0000 00-0

Legend: x = unknown, u = unchanged, – = unimplemented, read as '0', q = value depends upon condition. Shaded cells are not used by the Interrupt module.

Note 1: PIC16F636/639 only.

12.10 Context Saving During Interrupts

During an interrupt, only the return PC value is saved on the stack. Typically, users may wish to save key registers during an interrupt (e.g., W and STATUS registers). This must be implemented in software.

Since the lower 16 bytes of all banks are common in the PIC12F635/PIC16F636/639 (see Figure 2-2), temporary holding registers, W_TEMP and STATUS_TEMP, should be placed in here. These 16 locations do not require banking and therefore, make it easier to context save and restore. The same code shown in Example 12-1 can be used to:

- Store the W register.
- Store the STATUS register.
- Execute the ISR code.
- Restore the Status (and Bank Select Bit register).
- Restore the W register.

Note: The PIC12F635/PIC16F636/639 normally does not require saving the PCLATH. However, if computed `GOTO`'s are used in the ISR and the main code, the PCLATH must be saved and restored in the ISR.

EXAMPLE 12-1: SAVING STATUS AND W REGISTERS IN RAM

```
MOVWF   W_TEMP              ;Copy W to TEMP register
SWAPF   STATUS,W            ;Swap status to be saved into W
                            ;Swaps are used because they do not affect the status bits
MOVWF   STATUS_TEMP         ;Save status to bank zero STATUS_TEMP register
:
:(ISR)                      ;Insert user code here
:
SWAPF   STATUS_TEMP,W       ;Swap STATUS_TEMP register into W
                            ;(sets bank to original state)
MOVWF   STATUS              ;Move W into STATUS register
SWAPF   W_TEMP,F            ;Swap W_TEMP
SWAPF   W_TEMP,W            ;Swap W_TEMP into W
```


© 2007 Microchip Technology Inc.

12.11 Watchdog Timer (WDT)

The PIC12F635/PIC16F636/639 WDT is code and functionally compatible with other PIC16F WDT modules and adds a 16-bit prescaler to the WDT. This allows the user to have a scaler value for the WDT and TMR0 at the same time. In addition, the WDT time-out value can be extended to 268 seconds. WDT is cleared under certain conditions described in Table 12-7.

12.11.1 WDT OSCILLATOR

The WDT derives its time base from the 31 kHz LFINTOSC. The LTS bit does not reflect that the LFINTOSC is enabled.

The value of WDTCON is '`---0 1000`' on all Resets. This gives a nominal time base of 16 ms, which is compatible with the time base generated with previous PIC12F635/PIC16F636/639 microcontroller versions.

Note:	When the Oscillator Start-up Timer (OST) is invoked, the WDT is held in Reset, because the WDT Ripple Counter is used by the OST to perform the oscillator delay count. When the OST count has expired, the WDT will begin counting (if enabled).

A new prescaler has been added to the path between the INTRC and the multiplexers used to select the path for the WDT. This prescaler is 16 bits and can be programmed to divide the INTRC by 32 to 65536, giving the WDT a nominal range of 1 ms to 268s.

12.11.2 WDT CONTROL

The WDTE bit is located in the Configuration Word register. When set, the WDT runs continuously.

When the WDTE bit in the Configuration Word register is set, the SWDTEN bit of the WDTCON register has no effect. If WDTE is clear, then the SWDTEN bit can be used to enable and disable the WDT. Setting the bit will enable it and clearing the bit will disable it.

The PSA and PS<2:0> bits of the OPTION register have the same function as in previous versions of the PIC16F family of microcontrollers. See **Section 5.0 "Timer0 Module"** for more information.

FIGURE 12-9: WATCHDOG TIMER BLOCK DIAGRAM

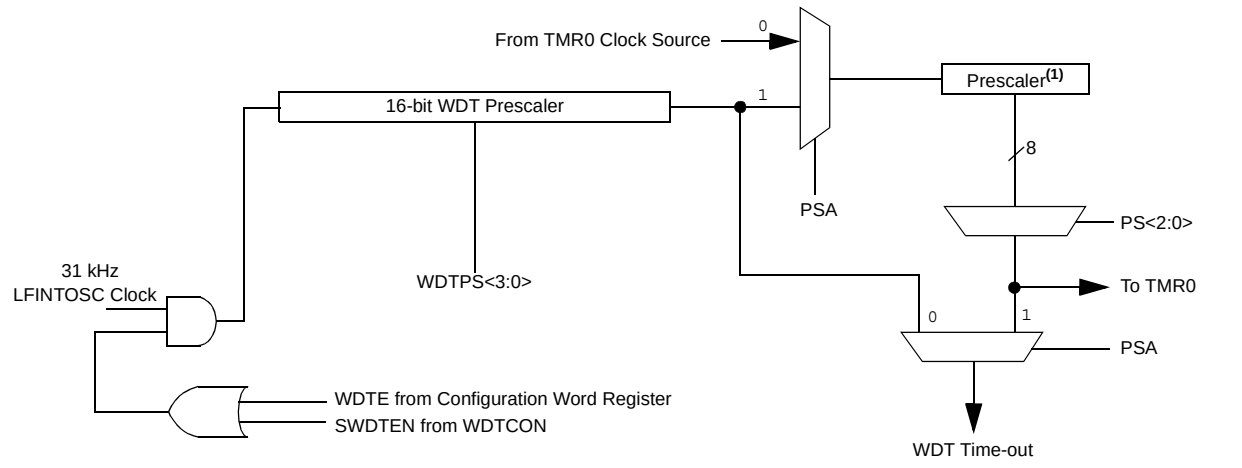

Note 1: This is the shared Timer0/WDT prescaler. See **Section 5.1.3 "Software Programmable Prescaler"** for more information.

TABLE 12-7: WDT STATUS

Conditions	WDT
WDTE = `0`	Cleared
`CLRWDT` Command	
Oscillator Fail Detected	
Exit Sleep + System Clock = T1OSC, EXTRC, HFINTOSC, EXTCLK	
Exit Sleep + System Clock = XT, HS, LP	Cleared until the end of OST

REGISTER 12-2: WDTCON: WATCHDOG TIMER CONTROL REGISTER

U-0	U-0	U-0	R/W-0	R/W-1	R/W-0	R/W-0	R/W-0
—	—	—	WDTPS3	WDTPS2	WDTPS1	WDTPS0	SWDTEN(1)
bit 7							bit 0

Legend:			
R = Readable bit	W = Writable bit	U = Unimplemented bit, read as ‘0’	
-n = Value at POR	‘1’ = Bit is set	‘0’ = Bit is cleared	x = Bit is unknown

bit 7-5 **Unimplemented:** Read as ‘0’

bit 4-1 **WDTPS<3:0>:** Watchdog Timer Period Select bits
Bit Value = Prescale Rate
0000 = 1:32
0001 = 1:64
0010 = 1:128
0011 = 1:256
0100 = 1:512 (Reset value)
0101 = 1:1024
0110 = 1:2048
0111 = 1:4096
1000 = 1:8192
1001 = 1:16384
1010 = 1:32768
1011 = 1:65536
1100 = Reserved
1101 = Reserved
1110 = Reserved
1111 = Reserved

bit 0 **SWDTEN:** Software Enable or Disable the Watchdog Timer bit(1)
1 = WDT is turned on
0 = WDT is turned off (Reset value)

Note 1: If WDTE Configuration bit = 1, then WDT is always enabled, irrespective of this control bit. If WDTE Configuration bit = 0, then it is possible to turn WDT on/off with this control bit.

TABLE 12-8: SUMMARY OF REGISTERS ASSOCIATED WITH WATCHDOG TIMER

Name	Bit 7	Bit 6	Bit 5	Bit 4	Bit 3	Bit 2	Bit 1	Bit 0	Value on POR, BOR	Value on all other Resets
WDTCON	—	—	—	WDTPS3	WDTPS2	WSTPS1	WDTPS0	SWDTEN	---0 1000	---0 1000
OPTION_REG	$\overline{\text{RAPU}}$	INTEDG	T0CS	T0SE	PSA	PS2	PS1	PS0	1111 1111	1111 1111
CONFIG	$\overline{\text{CPD}}$	$\overline{\text{CP}}$	MCLRE	$\overline{\text{PWRTE}}$	WDTE	FOSC2	FOSC1	FOSC0	—	—

Legend: Shaded cells are not used by the Watchdog Timer.
Note 1: See Register 12-1 for operation of all Configuration Word register bits.

© 2007 Microchip Technology Inc.

12.12 Power-Down Mode (Sleep)

The Power-down mode is entered by executing a SLEEP instruction.

If the Watchdog Timer is enabled:

- WDT will be cleared but keeps running.
- $\overline{PD}$ bit in the STATUS register is cleared.
- $\overline{TO}$ bit is set.
- Oscillator driver is turned off.
- I/O ports maintain the status they had before SLEEP was executed (driving high, low or high-impedance).

For lowest current consumption in this mode, all I/O pins should be either at V_{DD} or V_{SS}, with no external circuitry drawing current from the I/O pin and the comparators and CV_{REF} should be disabled. I/O pins that are high-impedance inputs should be pulled high or low externally to avoid switching currents caused by floating inputs. The T0CKI input should also be at V_{DD} or V_{SS} for lowest current consumption. The contribution from on-chip pull-ups on PORTA should be considered.

The $\overline{MCLR}$ pin must be at a logic high level.

Note 1:	It should be noted that a Reset generated by a WDT time-out does not drive $\overline{MCLR}$ pin low.
2:	The Analog Front-End (AFE) section in the PIC16F639 device is independent of the microcontroller's power-down mode (Sleep). See **Section 11.32.2.3 "Sleep Command"** for AFE's Sleep mode.

12.12.1 WAKE-UP FROM SLEEP

The device can wake-up from Sleep through one of the following events:

1. External Reset input on $\overline{MCLR}$ pin.
2. Watchdog Timer wake-up (if WDT was enabled).
3. Interrupt from RA2/INT pin, PORTA change or a peripheral interrupt.

The first event will cause a device Reset. The two latter events are considered a continuation of program execution. The $\overline{TO}$ and $\overline{PD}$ bits in the STATUS register can be used to determine the cause of device Reset. The $\overline{PD}$ bit, which is set on power-up, is cleared when Sleep is invoked. $\overline{TO}$ bit is cleared if WDT wake-up occurred.

The following peripheral interrupts can wake the device from Sleep:

1. TMR1 interrupt. Timer1 must be operating as an asynchronous counter.
2. Special event trigger (Timer1 in Asynchronous mode using an external clock).
3. EEPROM write operation completion.
4. Comparator output changes state.
5. Interrupt-on-change.
6. External Interrupt from INT pin.

Other peripherals cannot generate interrupts, since during Sleep, no on-chip clocks are present.

When the SLEEP instruction is being executed, the next instruction (PC + 1) is prefetched. For the device to wake-up through an interrupt event, the corresponding interrupt enable bit must be set (enabled). Wake-up is regardless of the state of the GIE bit. If the GIE bit is clear (disabled), the device continues execution at the instruction after the SLEEP instruction. If the GIE bit is set (enabled), the device executes the instruction after the SLEEP instruction, then branches to the interrupt address (0004h). In cases where the execution of the instruction following SLEEP is not desirable, the user should have a NOP after the SLEEP instruction.

Note:	If the global interrupts are disabled (GIE is cleared), but any interrupt source has both its interrupt enable bit and the corresponding interrupt flag bits set, the device will immediately wake-up from Sleep. The SLEEP instruction is completely executed.

The WDT is cleared when the device wakes up from Sleep, regardless of the source of wake-up.

Note:	If WUR is enabled (WURE = 0 in Configuration Word), then the Wake-up Reset module will force a device Reset.

12.12.2 WAKE-UP USING INTERRUPTS

When global interrupts are disabled (GIE cleared) and any interrupt source has both its interrupt enable bit and interrupt flag bit set, one of the following will occur:

- If the interrupt occurs **before** the execution of a SLEEP instruction, the SLEEP instruction will complete as a NOP. Therefore, the WDT and WDT prescaler and postscaler (if enabled) will not be cleared, the $\overline{TO}$ bit will not be set and the $\overline{PD}$ bit will not be cleared.
- If the interrupt occurs **during or after** the execution of a SLEEP instruction, the device will immediately wake-up from Sleep. The SLEEP instruction will be completely executed before the wake-up. Therefore, the WDT and WDT prescaler and postscaler (if enabled) will be cleared, the $\overline{TO}$ bit will be set and the $\overline{PD}$ bit will be cleared.

Even if the flag bits were checked before executing a SLEEP instruction, it may be possible for flag bits to become set before the SLEEP instruction completes. To determine whether a SLEEP instruction executed, test the $\overline{PD}$ bit. If the $\overline{PD}$ bit is set, the SLEEP instruction was executed as a NOP.

To ensure that the WDT is cleared, a CLRWDT instruction should be executed before a SLEEP instruction.

FIGURE 12-10: WAKE-UP FROM SLEEP THROUGH INTERRUPT

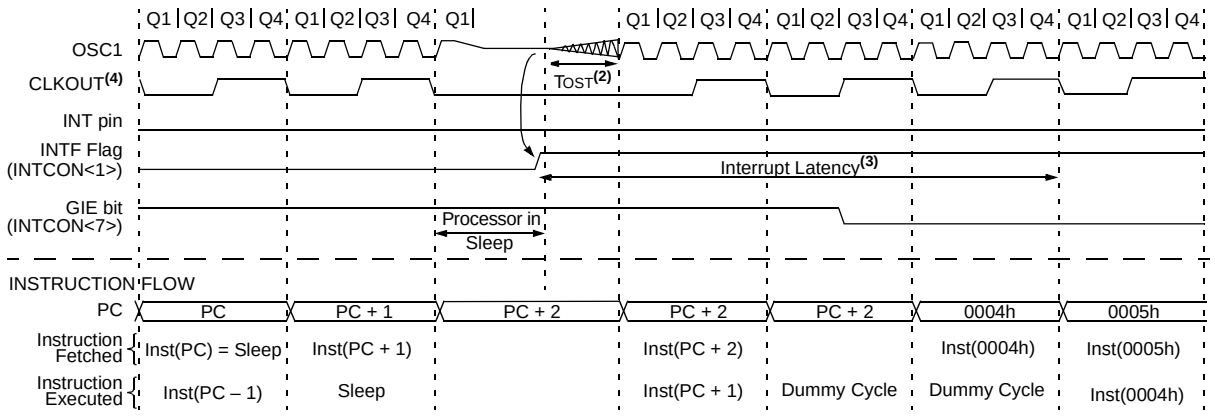

Note 1: XT, HS or LP Oscillator mode assumed.

2: TOST = 1024 TOSC (drawing not to scale). This delay does not apply to EC and RC Oscillator modes.

3: GIE = 1 assumed. In this case after wake-up, the processor jumps to 0004h. If GIE = 0, execution will continue in-line.

4: CLKOUT is not available in XT, HS, LP or EC Oscillator modes, but shown here for timing reference.

12.13 Code Protection

If the code protection bit(s) have not been programmed, the on-chip program memory can be read out using ICSP for verification purposes.

> **Note:** The entire data EEPROM and Flash program memory will be erased when the code protection is turned off. See the *"PIC12F6XX/16F6XX Memory Programming Specification"* (DS41204) for more information.

12.14 ID Locations

Four memory locations (2000h-2003h) are designated as ID locations where the user can store checksum or other code identification numbers. These locations are not accessible during normal execution but are readable and writable during Program/Verify mode. Only the Least Significant 7 bits of the ID locations are used.

© 2007 Microchip Technology Inc.

12.15 In-Circuit Serial Programming

The PIC12F635/PIC16F636/639 microcontrollers can be serially programmed while in the end application circuit. This is simply done with two lines for clock and data and three other lines for:

- Power
- Ground
- Programming Voltage

This allows customers to manufacture boards with unprogrammed devices and then program the microcontroller just before shipping the product. This also allows the most recent firmware or a custom firmware to be programmed.

The device is placed into a Program/Verify mode by holding the RA0 and RA1 pins low, while raising the $\overline{MCLR}$ (V_{PP}) pin from V_{IL} to V_{IHH}. See the *"PIC12F6XX/16F6XX Memory Programming Specification"* (DS41204) for more information. RA0 becomes the programming data and RA1 becomes the programming clock. Both RA0 and RA1 are Schmitt Trigger inputs in this mode.

After Reset, to place the device into Program/Verify mode, the Program Counter (PC) is at location 00h. A 6-bit command is then supplied to the device. Depending on the command, 14 bits of program data are then supplied to or from the device, depending on whether the command was a load or a read. For complete details of serial programming, please refer to the *"PIC12F6XX/16F6XX Memory Programming Specification"* (DS41204).

A typical In-Circuit Serial Programming connection is shown in Figure 12-11.

FIGURE 12-11: TYPICAL IN-CIRCUIT SERIAL PROGRAMMING CONNECTION

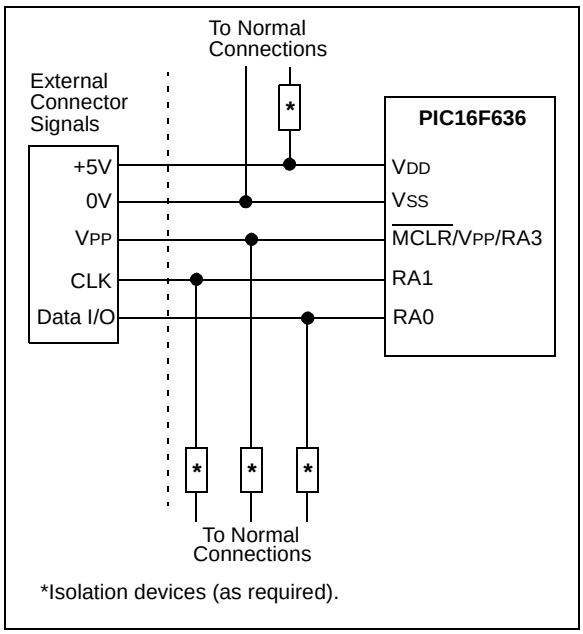

12.16 In-Circuit Debugger

Since in-circuit debugging requires the loss of clock, data and $\overline{MCLR}$ pins, MPLAB® ICD 2 development with a 14-pin device is not practical. A special 20-pin PIC16F636 ICD device is used with MPLAB ICD 2 to provide separate clock, data and $\overline{MCLR}$ pins and frees all normally available pins to the user.

Use of the ICD device requires the purchase of a special header. On the top of the header is an MPLAB ICD 2 connector. On the bottom of the header is a 14-pin socket that plugs into the user's target via the 14-pin stand-off connector.

When the $\overline{ICD}$ pin on the PIC16F636 ICD device is held low, the In-Circuit Debugger functionality is enabled. This function allows simple debugging functions when used with MPLAB ICD 2. When the microcontroller has this feature enabled, some of the resources are not available for general use. Table 12-9 shows which features are consumed by the background debugger:

TABLE 12-9: DEBUGGER RESOURCES

Resource	Description
I/O pins	ICDCLK, ICDDATA
Stack	1 level
Program Memory	Address 0h must be `NOP` 700h-7FFh

For more information, see the "*MPLAB® ICD 2 In-Circuit Debugger User's Guide*" (DS51331), available on Microchip's web site (www.microchip.com).

FIGURE 12-12: 20-PIN ICD PINOUT

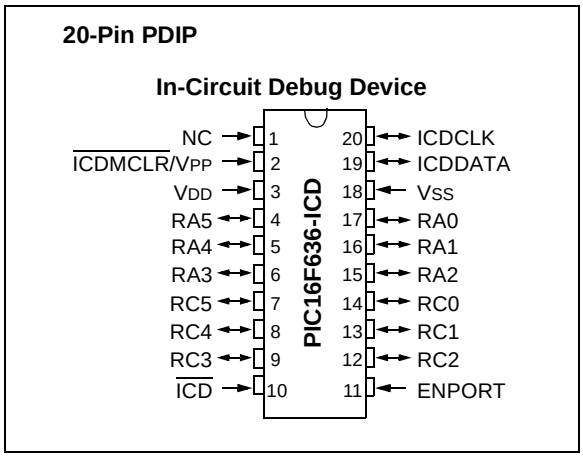

NOTES:

© 2007 Microchip Technology Inc.

13.0 INSTRUCTION SET SUMMARY

The PIC12F635/PIC16F636/639 instruction set is highly orthogonal and is comprised of three basic categories:

- **Byte-oriented** operations
- **Bit-oriented** operations
- **Literal and control** operations

Each PIC16 instruction is a 14-bit word divided into an **opcode,** which specifies the instruction type and one or more **operands,** which further specify the operation of the instruction. The formats for each of the categories is presented in Figure 13-1, while the various opcode fields are summarized in Table 13-1.

Table 13-2 lists the instructions recognized by the MPASM™ assembler.

For **byte-oriented** instructions, ‘f’ represents a file register designator and ‘d’ represents a destination designator. The file register designator specifies which file register is to be used by the instruction.

The destination designator specifies where the result of the operation is to be placed. If ‘d’ is zero, the result is placed in the W register. If ‘d’ is one, the result is placed in the file register specified in the instruction.

For **bit-oriented** instructions, ‘b’ represents a bit field designator, which selects the bit affected by the operation, while ‘f’ represents the address of the file in which the bit is located.

For **literal and control** operations, ‘k’ represents an 8-bit or 11-bit constant, or literal value.

One instruction cycle consists of four oscillator periods; for an oscillator frequency of 4 MHz, this gives a nominal instruction execution time of 1 µs. All instructions are executed within a single instruction cycle, unless a conditional test is true, or the program counter is changed as a result of an instruction. When this occurs, the execution takes two instruction cycles, with the second cycle executed as a `NOP`.

All instruction examples use the format ‘`0xhh`’ to represent a hexadecimal number, where ‘`h`’ signifies a hexadecimal digit.

13.1 Read-Modify-Write Operations

Any instruction that specifies a file register as part of the instruction performs a Read-Modify-Write (R-M-W) operation. The register is read, the data is modified, and the result is stored according to either the instruction, or the destination designator ‘d’. A read operation is performed on a register even if the instruction writes to that register.

For example, a `CLRF PORTA` instruction will read PORTA, clear all the data bits, then write the result back to PORTA. This example would have the unintended consequence of clearing the condition that set the RAIF flag.

TABLE 13-1: OPCODE FIELD DESCRIPTIONS

Field	Description
f	Register file address (0x00 to 0x7F)
W	Working register (accumulator)
b	Bit address within an 8-bit file register
k	Literal field, constant data or label
x	Don’t care location (= `0` or `1`). The assembler will generate code with x = `0`. It is the recommended form of use for compatibility with all Microchip software tools.
d	Destination select; d = `0`: store result in W, d = `1`: store result in file register f. Default is d = `1`.
PC	Program Counter
$\overline{TO}$	Time-out bit
C	Carry bit
DC	Digit carry bit
Z	Zero bit
$\overline{PD}$	Power-down bit

FIGURE 13-1: GENERAL FORMAT FOR INSTRUCTIONS

Byte-oriented file register operations

13 … 8	7	6 … 0
OPCODE	d	f (FILE #)

d = `0` for destination W
d = `1` for destination f
f = 7-bit file register address

Bit-oriented file register operations

13 … 10	9 … 7	6 … 0
OPCODE	b (BIT #)	f (FILE #)

b = 3-bit bit address
f = 7-bit file register address

Literal and control operations

General

13 … 8	7 … 0
OPCODE	k (literal)

k = 8-bit immediate value

`CALL` and `GOTO` instructions only

13 … 11	10 … 0
OPCODE	k (literal)

k = 11-bit immediate value

TABLE 13-2: PIC12F635/PIC16F636/639 INSTRUCTION SET

Mnemonic, Operands		Description	Cycles	14-Bit Opcode MSb			LSb	Status Affected	Notes
BYTE-ORIENTED FILE REGISTER OPERATIONS									
ADDWF	f, d	Add W and f	1	00	0111	dfff	ffff	C, DC, Z	**1, 2**
ANDWF	f, d	AND W with f	1	00	0101	dfff	ffff	Z	**1, 2**
CLRF	f	Clear f	1	00	0001	lfff	ffff	Z	**2**
CLRW	–	Clear W	1	00	0001	0xxx	xxxx	Z	
COMF	f, d	Complement f	1	00	1001	dfff	ffff	Z	**1, 2**
DECF	f, d	Decrement f	1	00	0011	dfff	ffff	Z	**1, 2**
DECFSZ	f, d	Decrement f, Skip if 0	1**(2)**	00	1011	dfff	ffff		**1, 2, 3**
INCF	f, d	Increment f	1	00	1010	dfff	ffff	Z	**1, 2**
INCFSZ	f, d	Increment f, Skip if 0	1**(2)**	00	1111	dfff	ffff		**1, 2, 3**
IORWF	f, d	Inclusive OR W with f	1	00	0100	dfff	ffff	Z	**1, 2**
MOVF	f, d	Move f	1	00	1000	dfff	ffff	Z	**1, 2**
MOVWF	f	Move W to f	1	00	0000	lfff	ffff		
NOP	–	No Operation	1	00	0000	0xx0	0000		
RLF	f, d	Rotate Left f through Carry	1	00	1101	dfff	ffff	C	**1, 2**
RRF	f, d	Rotate Right f through Carry	1	00	1100	dfff	ffff	C	**1, 2**
SUBWF	f, d	Subtract W from f	1	00	0010	dfff	ffff	C, DC, Z	**1, 2**
SWAPF	f, d	Swap nibbles in f	1	00	1110	dfff	ffff		**1, 2**
XORWF	f, d	Exclusive OR W with f	1	00	0110	dfff	ffff	Z	**1, 2**
BIT-ORIENTED FILE REGISTER OPERATIONS									
BCF	f, b	Bit Clear f	1	01	00bb	bfff	ffff		**1, 2**
BSF	f, b	Bit Set f	1	01	01bb	bfff	ffff		**1, 2**
BTFSC	f, b	Bit Test f, Skip if Clear	1 **(2)**	01	10bb	bfff	ffff		**3**
BTFSS	f, b	Bit Test f, Skip if Set	1 **(2)**	01	11bb	bfff	ffff		**3**
LITERAL AND CONTROL OPERATIONS									
ADDLW	k	Add literal and W	1	11	111x	kkkk	kkkk	C, DC, Z	
ANDLW	k	AND literal with W	1	11	1001	kkkk	kkkk	Z	
CALL	k	Call Subroutine	2	10	0kkk	kkkk	kkkk		
CLRWDT	–	Clear Watchdog Timer	1	00	0000	0110	0100	$\overline{TO}$, $\overline{PD}$	
GOTO	k	Go to address	2	10	1kkk	kkkk	kkkk		
IORLW	k	Inclusive OR literal with W	1	11	1000	kkkk	kkkk	Z	
MOVLW	k	Move literal to W	1	11	00xx	kkkk	kkkk		
RETFIE	–	Return from interrupt	2	00	0000	0000	1001		
RETLW	k	Return with literal in W	2	11	01xx	kkkk	kkkk		
RETURN	–	Return from Subroutine	2	00	0000	0000	1000		
SLEEP	–	Go into Standby mode	1	00	0000	0110	0011	$\overline{TO}$, $\overline{PD}$	
SUBLW	k	Subtract W from literal	1	11	110x	kkkk	kkkk	C, DC, Z	
XORLW	k	Exclusive OR literal with W	1	11	1010	kkkk	kkkk	Z	

Note 1: When an I/O register is modified as a function of itself (e.g., `MOVF GPIO, 1`), the value used will be that value present on the pins themselves. For example, if the data latch is '`1`' for a pin configured as input and is driven low by an external device, the data will be written back with a '`0`'.

2: If this instruction is executed on the TMR0 register (and where applicable, d = `1`), the prescaler will be cleared if assigned to the Timer0 module.

3: If the Program Counter (PC) is modified, or a conditional test is true, the instruction requires two cycles. The second cycle is executed as a `NOP`.

© 2007 Microchip Technology Inc.

13.2 Instruction Descriptions

ADDLW	Add literal and W
Syntax:	[*label*] ADDLW k
Operands:	$0 \le k \le 255$
Operation:	(W) + k → (W)
Status Affected:	C, DC, Z
Description:	The contents of the W register are added to the eight-bit literal 'k' and the result is placed in the W register.

ADDWF	Add W and f
Syntax:	[*label*] ADDWF f,d
Operands:	$0 \le f \le 127$ $d \in [0,1]$
Operation:	(W) + (f) → (destination)
Status Affected:	C, DC, Z
Description:	Add the contents of the W register with register 'f'. If 'd' is '0', the result is stored in the W register. If 'd' is '1', the result is stored back in register 'f'.

ANDLW	AND literal with W
Syntax:	[*label*] ANDLW k
Operands:	$0 \le k \le 255$
Operation:	(W) .AND. (k) → (W)
Status Affected:	Z
Description:	The contents of W register are AND'ed with the eight-bit literal 'k'. The result is placed in the W register.

ANDWF	AND W with f
Syntax:	[*label*] ANDWF f,d
Operands:	$0 \le f \le 127$ $d \in [0,1]$
Operation:	(W) .AND. (f) → (destination)
Status Affected:	Z
Description:	AND the W register with register 'f'. If 'd' is '0', the result is stored in the W register. If 'd' is '1', the result is stored back in register 'f'.

BCF	Bit Clear f
Syntax:	[*label*] BCF f,b
Operands:	$0 \le f \le 127$ $0 \le b \le 7$
Operation:	0 → (f<b>)
Status Affected:	None
Description:	Bit 'b' in register 'f' is cleared.

BSF	Bit Set f
Syntax:	[*label*] BSF f,b
Operands:	$0 \le f \le 127$ $0 \le b \le 7$
Operation:	1 → (f<b>)
Status Affected:	None
Description:	Bit 'b' in register 'f' is set.

BTFSC	Bit Test f, Skip if Clear
Syntax:	[*label*] BTFSC f,b
Operands:	$0 \le f \le 127$ $0 \le b \le 7$
Operation:	skip if (f<b>) = 0
Status Affected:	None
Description:	If bit 'b' in register 'f' is '1', the next instruction is executed. If bit 'b', in register 'f', is '0', the next instruction is discarded, and a NOP is executed instead, making this a two-cycle instruction.

BTFSS	Bit Test f, Skip if Set
Syntax:	[*label*] BTFSS f,b
Operands:	$0 \le f \le 127$ $0 \le b < 7$
Operation:	skip if (f<b>) = 1
Status Affected:	None
Description:	If bit 'b' in register 'f' is '0', the next instruction is executed. If bit 'b' is '1', then the next instruction is discarded and a NOP is executed instead, making this a two-cycle instruction.

CALL	Call Subroutine
Syntax:	[*label*] CALL k
Operands:	$0 \le k \le 2047$
Operation:	(PC)+ 1→ TOS, k → PC<10:0>, (PCLATH<4:3>) → PC<12:11>
Status Affected:	None
Description:	Call Subroutine. First, return address (PC + 1) is pushed onto the stack. The eleven-bit immediate address is loaded into PC bits <10:0>. The upper bits of the PC are loaded from PCLATH. CALL is a two-cycle instruction.

CLRF	Clear f
Syntax:	[*label*] CLRF f
Operands:	$0 \le f \le 127$
Operation:	00h → (f) 1 → Z
Status Affected:	Z
Description:	The contents of register 'f' are cleared and the Z bit is set.

CLRW	Clear W
Syntax:	[*label*] CLRW
Operands:	None
Operation:	00h → (W) 1 → Z
Status Affected:	Z
Description:	W register is cleared. Zero bit (Z) is set.

CLRWDT	Clear Watchdog Timer
Syntax:	[*label*] CLRWDT
Operands:	None
Operation:	00h → WDT 0 → WDT prescaler, 1 → $\overline{TO}$ 1 → $\overline{PD}$
Status Affected:	$\overline{TO}$, $\overline{PD}$
Description:	CLRWDT instruction resets the Watchdog Timer. It also resets the prescaler of the WDT. Status bits $\overline{TO}$ and $\overline{PD}$ are set.

COMF	Complement f
Syntax:	[*label*] COMF f,d
Operands:	$0 \le f \le 127$ $d \in [0,1]$
Operation:	($\bar{f}$) → (destination)
Status Affected:	Z
Description:	The contents of register 'f' are complemented. If 'd' is '0', the result is stored in W. If 'd' is '1', the result is stored back in register 'f'.

DECF	Decrement f
Syntax:	[*label*] DECF f,d
Operands:	$0 \le f \le 127$ $d \in [0,1]$
Operation:	(f) - 1 → (destination)
Status Affected:	Z
Description:	Decrement register 'f'. If 'd' is '0', the result is stored in the W register. If 'd' is '1', the result is stored back in register 'f'.

© 2007 Microchip Technology Inc.

DECFSZ	Decrement f, Skip if 0
Syntax:	[*label*] DECFSZ f,d
Operands:	$0 \le f \le 127$ $d \in [0,1]$
Operation:	(f) - 1 → (destination); skip if result = 0
Status Affected:	None
Description:	The contents of register 'f' are decremented. If 'd' is '0', the result is placed in the W register. If 'd' is '1', the result is placed back in register 'f'. If the result is '1', the next instruction is executed. If the result is '0', then a NOP is executed instead, making it a two-cycle instruction.

GOTO	Unconditional Branch
Syntax:	[*label*] GOTO k
Operands:	$0 \le k \le 2047$
Operation:	k → PC<10:0> PCLATH<4:3> → PC<12:11>
Status Affected:	None
Description:	GOTO is an unconditional branch. The eleven-bit immediate value is loaded into PC bits <10:0>. The upper bits of PC are loaded from PCLATH<4:3>. GOTO is a two-cycle instruction.

INCF	Increment f
Syntax:	[*label*] INCF f,d
Operands:	$0 \le f \le 127$ $d \in [0,1]$
Operation:	(f) + 1 → (destination)
Status Affected:	Z
Description:	The contents of register 'f' are incremented. If 'd' is '0', the result is placed in the W register. If 'd' is '1', the result is placed back in register 'f'.

INCFSZ	Increment f, Skip if 0
Syntax:	[*label*] INCFSZ f,d
Operands:	$0 \le f \le 127$ $d \in [0,1]$
Operation:	(f) + 1 → (destination), skip if result = 0
Status Affected:	None
Description:	The contents of register 'f' are incremented. If 'd' is '0', the result is placed in the W register. If 'd' is '1', the result is placed back in register 'f'. If the result is '1', the next instruction is executed. If the result is '0', a NOP is executed instead, making it a two-cycle instruction.

IORLW	Inclusive OR literal with W
Syntax:	[*label*] IORLW k
Operands:	$0 \le k \le 255$
Operation:	(W) .OR. k → (W)
Status Affected:	Z
Description:	The contents of the W register are OR'ed with the eight-bit literal 'k'. The result is placed in the W register.

IORWF	Inclusive OR W with f
Syntax:	[*label*] IORWF f,d
Operands:	$0 \le f \le 127$ $d \in [0,1]$
Operation:	(W) .OR. (f) → (destination)
Status Affected:	Z
Description:	Inclusive OR the W register with register 'f'. If 'd' is '0', the result is placed in the W register. If 'd' is '1', the result is placed back in register 'f'.

MOVF	Move f
Syntax:	[*label*] MOVF f,d
Operands:	$0 \le f \le 127$ $d \in [0,1]$
Operation:	(f) → (dest)
Status Affected:	Z
Description:	The contents of register f is moved to a destination dependent upon the status of d. If d = 0, destination is W register. If d = 1, the destination is file register f itself. d = 1 is useful to test a file register since status flag Z is affected.
Words:	1
Cycles:	1
Example:	`MOVF FSR, 0` After Instruction W = value in FSR register Z = 1

MOVWF	Move W to f
Syntax:	[*label*] MOVWF f
Operands:	$0 \le f \le 127$
Operation:	(W) → (f)
Status Affected:	None
Description:	Move data from W register to register ‘f’.
Words:	1
Cycles:	1
Example:	`MOVW OPTION F` Before Instruction OPTION = 0xFF W = 0x4F After Instruction OPTION = 0x4F W = 0x4F

MOVLW	Move literal to W
Syntax:	[*label*] MOVLW k
Operands:	$0 \le k \le 255$
Operation:	k → (W)
Status Affected:	None
Description:	The eight-bit literal ‘k’ is loaded into W register. The “don’t cares” will assemble as ‘0’s.
Words:	1
Cycles:	1
Example:	`MOVLW 0x5A` After Instruction W = 0x5A

NOP	No Operation
Syntax:	[*label*] NOP
Operands:	None
Operation:	No operation
Status Affected:	None
Description:	No operation.
Words:	1
Cycles:	1
Example:	`NOP`

© 2007 Microchip Technology Inc.

RETFIE	Return from Interrupt
Syntax:	[*label*] RETFIE
Operands:	None
Operation:	TOS → PC, 1 → GIE
Status Affected:	None
Description:	Return from Interrupt. Stack is POPed and Top-of-Stack (TOS) is loaded in the PC. Interrupts are enabled by setting Global Interrupt Enable bit, GIE (INTCON<7>). This is a two-cycle instruction.
Words:	1
Cycles:	2
Example:	`RETFIE` After Interrupt PC = TOS GIE = 1

RETLW	Return with literal in W
Syntax:	[*label*] RETLW k
Operands:	0 ≤ k ≤ 255
Operation:	k → (W); TOS → PC
Status Affected:	None
Description:	The W register is loaded with the eight-bit literal ‘k’. The program counter is loaded from the top of the stack (the return address). This is a two-cycle instruction.
Words:	1
Cycles:	2

Example:	`CALL TABLE;W contains table`
	`;offset value`
	`TABLE ;W now has table value`
	•
	•
	•
	`ADDWF PC ;W = offset`
	`RETLW k1 ;Begin table`
	`RETLW k2 ;`
	•
	•
	•
	`RETLW kn ; End of table`
	
	Before Instruction
	W = 0x07
	After Instruction
	W = value of k8

RETURN	Return from Subroutine
Syntax:	[*label*] RETURN
Operands:	None
Operation:	TOS → PC
Status Affected:	None
Description:	Return from subroutine. The stack is POPed and the top of the stack (TOS) is loaded into the program counter. This is a two-cycle instruction.

RLF	Rotate Left f through Carry
Syntax:	[*label*] RLF f,d
Operands:	$0 \le f \le 127$ $d \in [0,1]$
Operation:	See description below
Status Affected:	C
Description:	The contents of register ‘f’ are rotated one bit to the left through the Carry flag. If ‘d’ is ‘0’, the result is placed in the W register. If ‘d’ is ‘1’, the result is stored back in register ‘f’. 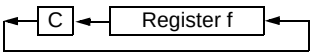
Words:	1
Cycles:	1

Example:	`RLF REG1,0`
	Before Instruction
	`REG1 = 1110 0110`
	`C = 0`
	After Instruction
	`REG1 = 1110 0110`
	`W = 1100 1100`
	`C = 1`

RRF	Rotate Right f through Carry
Syntax:	[*label*] RRF f,d
Operands:	$0 \le f \le 127$ $d \in [0,1]$
Operation:	See description below
Status Affected:	C
Description:	The contents of register ‘f’ are rotated one bit to the right through the Carry flag. If ‘d’ is ‘0’, the result is placed in the W register. If ‘d’ is ‘1’, the result is placed back in register ‘f’. 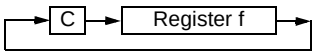

SLEEP	Enter Sleep mode
Syntax:	[*label*] SLEEP
Operands:	None
Operation:	00h → WDT, 0 → WDT prescaler, 1 → $\overline{TO}$, 0 → $\overline{PD}$
Status Affected:	$\overline{TO}$, $\overline{PD}$
Description:	The power-down Status bit, $\overline{PD}$ is cleared. Time-out Status bit, $\overline{TO}$ is set. Watchdog Timer and its prescaler are cleared. The processor is put into Sleep mode with the oscillator stopped.

SUBLW	Subtract W from literal
Syntax:	[*label*] SUBLW k
Operands:	$0 \le k \le 255$
Operation:	k - (W) → (W)
Status Affected:	C, DC, Z
Description:	The W register is subtracted (2’s complement method) from the eight-bit literal ‘k’. The result is placed in the W register. <table><tr><td>C = 0</td><td>W > k</td></tr><tr><td>C = 1</td><td>W ≤ k</td></tr><tr><td>DC = 0</td><td>W<3:0> > k<3:0></td></tr><tr><td>DC = 1</td><td>W<3:0> ≤ k<3:0></td></tr></table>

© 2007 Microchip Technology Inc.

SUBWF	Subtract W from f
Syntax:	[*label*] SUBWF f,d
Operands:	$0 \le f \le 127$ $d \in [0,1]$
Operation:	(f) - (W) → (destination)
Status Affected:	C, DC, Z
Description:	Subtract (2's complement method) W register from register 'f'. If 'd' is '0', the result is stored in the W register. If 'd' is '1', the result is stored back in register 'f.

C = 0	W > f
C = 1	W ≤ f
DC = 0	W<3:0> > f<3:0>
DC = 1	W<3:0> ≤ f<3:0>

SWAPF	Swap Nibbles in f
Syntax:	[*label*] SWAPF f,d
Operands:	$0 \le f \le 127$ $d \in [0,1]$
Operation:	(f<3:0>) → (destination<7:4>), (f<7:4>) → (destination<3:0>)
Status Affected:	None
Description:	The upper and lower nibbles of register 'f' are exchanged. If 'd' is '0', the result is placed in the W register. If 'd' is '1', the result is placed in register 'f'.

XORLW	Exclusive OR literal with W
Syntax:	[*label*] XORLW k
Operands:	$0 \le k \le 255$
Operation:	(W) .XOR. k → (W)
Status Affected:	Z
Description:	The contents of the W register are XOR'ed with the eight-bit literal 'k'. The result is placed in the W register.

XORWF	Exclusive OR W with f
Syntax:	[*label*] XORWF f,d
Operands:	$0 \le f \le 127$ $d \in [0,1]$
Operation:	(W) .XOR. (f) → (destination)
Status Affected:	Z
Description:	Exclusive OR the contents of the W register with register 'f'. If 'd' is '0', the result is stored in the W register. If 'd' is '1', the result is stored back in register 'f'.

NOTES:

© 2007 Microchip Technology Inc.

14.0 DEVELOPMENT SUPPORT

The PIC® microcontrollers are supported with a full range of hardware and software development tools:

- Integrated Development Environment
  - MPLAB® IDE Software
- Assemblers/Compilers/Linkers
  - MPASM™ Assembler
  - MPLAB C18 and MPLAB C30 C Compilers
  - MPLINK™ Object Linker/ MPLIB™ Object Librarian
  - MPLAB ASM30 Assembler/Linker/Library
- Simulators
  - MPLAB SIM Software Simulator
- Emulators
  - MPLAB ICE 2000 In-Circuit Emulator
  - MPLAB REAL ICE™ In-Circuit Emulator
- In-Circuit Debugger
  - MPLAB ICD 2
- Device Programmers
  - PICSTART® Plus Development Programmer
  - MPLAB PM3 Device Programmer
  - PICkit™ 2 Development Programmer
- Low-Cost Demonstration and Development Boards and Evaluation Kits

14.1 MPLAB Integrated Development Environment Software

The MPLAB IDE software brings an ease of software development previously unseen in the 8/16-bit micro-controller market. The MPLAB IDE is a Windows® operating system-based application that contains:

- A single graphical interface to all debugging tools
  - Simulator
  - Programmer (sold separately)
  - Emulator (sold separately)
  - In-Circuit Debugger (sold separately)
- A full-featured editor with color-coded context
- A multiple project manager
- Customizable data windows with direct edit of contents
- High-level source code debugging
- Visual device initializer for easy register initialization
- Mouse over variable inspection
- Drag and drop variables from source to watch windows
- Extensive on-line help
- Integration of select third party tools, such as HI-TECH Software C Compilers and IAR C Compilers

The MPLAB IDE allows you to:

- Edit your source files (either assembly or C)
- One touch assemble (or compile) and download to PIC MCU emulator and simulator tools (automatically updates all project information)
- Debug using:
  - Source files (assembly or C)
  - Mixed assembly and C
  - Machine code

MPLAB IDE supports multiple debugging tools in a single development paradigm, from the cost-effective simulators, through low-cost in-circuit debuggers, to full-featured emulators. This eliminates the learning curve when upgrading to tools with increased flexibility and power.

14.2 MPASM Assembler

The MPASM Assembler is a full-featured, universal macro assembler for all PIC MCUs.

The MPASM Assembler generates relocatable object files for the MPLINK Object Linker, Intel® standard HEX files, MAP files to detail memory usage and symbol reference, absolute LST files that contain source lines and generated machine code and COFF files for debugging.

The MPASM Assembler features include:

- Integration into MPLAB IDE projects
- User-defined macros to streamline assembly code
- Conditional assembly for multi-purpose source files
- Directives that allow complete control over the assembly process

14.3 MPLAB C18 and MPLAB C30 C Compilers

The MPLAB C18 and MPLAB C30 Code Development Systems are complete ANSI C compilers for Microchip's PIC18 and PIC24 families of microcontrollers and the dsPIC30 and dsPIC33 family of digital signal controllers. These compilers provide powerful integration capabilities, superior code optimization and ease of use not found with other compilers.

For easy source level debugging, the compilers provide symbol information that is optimized to the MPLAB IDE debugger.

14.4 MPLINK Object Linker/ MPLIB Object Librarian

The MPLINK Object Linker combines relocatable objects created by the MPASM Assembler and the MPLAB C18 C Compiler. It can link relocatable objects from precompiled libraries, using directives from a linker script.

The MPLIB Object Librarian manages the creation and modification of library files of precompiled code. When a routine from a library is called from a source file, only the modules that contain that routine will be linked in with the application. This allows large libraries to be used efficiently in many different applications.

The object linker/library features include:

- Efficient linking of single libraries instead of many smaller files
- Enhanced code maintainability by grouping related modules together
- Flexible creation of libraries with easy module listing, replacement, deletion and extraction

14.5 MPLAB ASM30 Assembler, Linker and Librarian

MPLAB ASM30 Assembler produces relocatable machine code from symbolic assembly language for dsPIC30F devices. MPLAB C30 C Compiler uses the assembler to produce its object file. The assembler generates relocatable object files that can then be archived or linked with other relocatable object files and archives to create an executable file. Notable features of the assembler include:

- Support for the entire dsPIC30F instruction set
- Support for fixed-point and floating-point data
- Command line interface
- Rich directive set
- Flexible macro language
- MPLAB IDE compatibility

14.6 MPLAB SIM Software Simulator

The MPLAB SIM Software Simulator allows code development in a PC-hosted environment by simulating the PIC MCUs and dsPIC® DSCs on an instruction level. On any given instruction, the data areas can be examined or modified and stimuli can be applied from a comprehensive stimulus controller. Registers can be logged to files for further run-time analysis. The trace buffer and logic analyzer display extend the power of the simulator to record and track program execution, actions on I/O, most peripherals and internal registers.

The MPLAB SIM Software Simulator fully supports symbolic debugging using the MPLAB C18 and MPLAB C30 C Compilers, and the MPASM and MPLAB ASM30 Assemblers. The software simulator offers the flexibility to develop and debug code outside of the hardware laboratory environment, making it an excellent, economical software development tool.

© 2007 Microchip Technology Inc.

14.7 MPLAB ICE 2000 High-Performance In-Circuit Emulator

The MPLAB ICE 2000 In-Circuit Emulator is intended to provide the product development engineer with a complete microcontroller design tool set for PIC microcontrollers. Software control of the MPLAB ICE 2000 In-Circuit Emulator is advanced by the MPLAB Integrated Development Environment, which allows editing, building, downloading and source debugging from a single environment.

The MPLAB ICE 2000 is a full-featured emulator system with enhanced trace, trigger and data monitoring features. Interchangeable processor modules allow the system to be easily reconfigured for emulation of different processors. The architecture of the MPLAB ICE 2000 In-Circuit Emulator allows expansion to support new PIC microcontrollers.

The MPLAB ICE 2000 In-Circuit Emulator system has been designed as a real-time emulation system with advanced features that are typically found on more expensive development tools. The PC platform and Microsoft® Windows® 32-bit operating system were chosen to best make these features available in a simple, unified application.

14.8 MPLAB REAL ICE In-Circuit Emulator System

MPLAB REAL ICE In-Circuit Emulator System is Microchip's next generation high-speed emulator for Microchip Flash DSC® and MCU devices. It debugs and programs PIC® and dsPIC® Flash microcontrollers with the easy-to-use, powerful graphical user interface of the MPLAB Integrated Development Environment (IDE), included with each kit.

The MPLAB REAL ICE probe is connected to the design engineer's PC using a high-speed USB 2.0 interface and is connected to the target with either a connector compatible with the popular MPLAB ICD 2 system (RJ11) or with the new high speed, noise tolerant, low-voltage differential signal (LVDS) interconnection (CAT5).

MPLAB REAL ICE is field upgradeable through future firmware downloads in MPLAB IDE. In upcoming releases of MPLAB IDE, new devices will be supported, and new features will be added, such as software breakpoints and assembly code trace. MPLAB REAL ICE offers significant advantages over competitive emulators including low-cost, full-speed emulation, real-time variable watches, trace analysis, complex breakpoints, a ruggedized probe interface and long (up to three meters) interconnection cables.

14.9 MPLAB ICD 2 In-Circuit Debugger

Microchip's In-Circuit Debugger, MPLAB ICD 2, is a powerful, low-cost, run-time development tool, connecting to the host PC via an RS-232 or high-speed USB interface. This tool is based on the Flash PIC MCUs and can be used to develop for these and other PIC MCUs and dsPIC DSCs. The MPLAB ICD 2 utilizes the in-circuit debugging capability built into the Flash devices. This feature, along with Microchip's In-Circuit Serial Programming™ (ICSP™) protocol, offers cost-effective, in-circuit Flash debugging from the graphical user interface of the MPLAB Integrated Development Environment. This enables a designer to develop and debug source code by setting breakpoints, single stepping and watching variables, and CPU status and peripheral registers. Running at full speed enables testing hardware and applications in real time. MPLAB ICD 2 also serves as a development programmer for selected PIC devices.

14.10 MPLAB PM3 Device Programmer

The MPLAB PM3 Device Programmer is a universal, CE compliant device programmer with programmable voltage verification at V_{DDMIN} and V_{DDMAX} for maximum reliability. It features a large LCD display (128 x 64) for menus and error messages and a modular, detachable socket assembly to support various package types. The ICSP™ cable assembly is included as a standard item. In Stand-Alone mode, the MPLAB PM3 Device Programmer can read, verify and program PIC devices without a PC connection. It can also set code protection in this mode. The MPLAB PM3 connects to the host PC via an RS-232 or USB cable. The MPLAB PM3 has high-speed communications and optimized algorithms for quick programming of large memory devices and incorporates an SD/MMC card for file storage and secure data applications.

14.11 PICSTART Plus Development Programmer

The PICSTART Plus Development Programmer is an easy-to-use, low-cost, prototype programmer. It connects to the PC via a COM (RS-232) port. MPLAB Integrated Development Environment software makes using the programmer simple and efficient. The PICSTART Plus Development Programmer supports most PIC devices in DIP packages up to 40 pins. Larger pin count devices, such as the PIC16C92X and PIC17C76X, may be supported with an adapter socket. The PICSTART Plus Development Programmer is CE compliant.

14.12 PICkit 2 Development Programmer

The PICkit™ 2 Development Programmer is a low-cost programmer and selected Flash device debugger with an easy-to-use interface for programming many of Microchip's baseline, mid-range and PIC18F families of Flash memory microcontrollers. The PICkit 2 Starter Kit includes a prototyping development board, twelve sequential lessons, software and HI-TECH's PICC™ Lite C compiler, and is designed to help get up to speed quickly using PIC® microcontrollers. The kit provides everything needed to program, evaluate and develop applications using Microchip's powerful, mid-range Flash memory family of microcontrollers.

14.13 Demonstration, Development and Evaluation Boards

A wide variety of demonstration, development and evaluation boards for various PIC MCUs and dsPIC DSCs allows quick application development on fully functional systems. Most boards include prototyping areas for adding custom circuitry and provide application firmware and source code for examination and modification.

The boards support a variety of features, including LEDs, temperature sensors, switches, speakers, RS-232 interfaces, LCD displays, potentiometers and additional EEPROM memory.

The demonstration and development boards can be used in teaching environments, for prototyping custom circuits and for learning about various microcontroller applications.

In addition to the PICDEM™ and dsPICDEM™ demonstration/development board series of circuits, Microchip has a line of evaluation kits and demonstration software for analog filter design, KEELOQ® security ICs, CAN, IrDA®, PowerSmart® battery management, SEEVAL® evaluation system, Sigma-Delta ADC, flow rate sensing, plus many more.

Check the Microchip web page (www.microchip.com) and the latest *"Product Selector Guide"* (DS00148) for the complete list of demonstration, development and evaluation kits.

© 2007 Microchip Technology Inc.

15.0 ELECTRICAL SPECIFICATIONS

Absolute Maximum Ratings(†)

Ambient temperature under bias ..... -40°C to +125°C
Storage temperature ..... -65°C to +150°C
Voltage on V_{DD} with respect to V_{SS} ..... -0.3V to +6.5V
Voltage on $\overline{MCLR}$ with respect to Vss ..... -0.3V to +13.5V
Voltage on all other pins with respect to V_{SS} ..... -0.3V to (V_{DD} + 0.3V)
Total power dissipation(1) ..... 800 mW
Maximum current out of V_{SS}/V_{SST} pin ..... 95 mA
Maximum current into V_{DD}/V_{DDT} pin ..... 95 mA
Input clamp current, I_{IK} (V_I < 0 or V_I > V_{DD}) ..... ± 20 mA
Output clamp current, IOK (V_O < 0 or V_O >V_{DD}) ..... ± 20 mA
Maximum output current sunk by any I/O pin ..... 25 mA
Maximum output current sourced by any I/O pin ..... 25 mA
Maximum current sunk by PORTA and PORTC (combined) ..... 95 mA
Maximum current sourced PORTA and PORTC (combined) ..... 95 mA
Maximum LC Input Voltage (LCX, LCY, LCZ)(2) loaded, with device ..... 10.0 V_{PP}
Maximum LC Input Voltage (LCX, LCY, LCZ)(2) unloaded, without device ..... 700.0 V_{PP}
Maximum Input Current (rms) into device per LC Channel(2) ..... 10 mA
Human Body ESD rating ..... 4000 (min.) V
Machine Model ESD rating ..... 400 (min.) V

Note 1: Power dissipation for PIC12F635/PIC16F636/639 (AFE section not included) is calculated as follows:
$P_{DIS} = V_{DD} \times \{I_{DD} - \sum I_{OH}\} + \sum \{(V_{DD}-V_{OH}) \times I_{OH}\} + \sum(V_{OL} \times I_{OL})$.
Power dissipation for AFE section is calculated as follows:
$P_{DIS} = V_{DD} \times I_{ACT} = 3.6V \times 16\ \mu A = 57.6\ \mu W$

2: Specification applies to the PIC16F639 only.

† NOTICE: Stresses above those listed under “Absolute Maximum Ratings” may cause permanent damage to the device. This is a stress rating only and functional operation of the device at those or any other conditions above those indicated in the operation listings of this specification is not implied. Exposure to maximum rating conditions for extended periods may affect device reliability.

Note: Voltage spikes below V_{SS} at the $\overline{MCLR}$ pin, inducing currents greater than 80 mA, may cause latch-up. Thus, a series resistor of 50-100Ω should be used when applying a ‘low’ level to the $\overline{MCLR}$ pin, rather than pulling this pin directly to V_{SS}.

FIGURE 15-1: PIC12F635/16F636 VOLTAGE-FREQUENCY GRAPH, -40°C ≤ TA ≤ +125°C

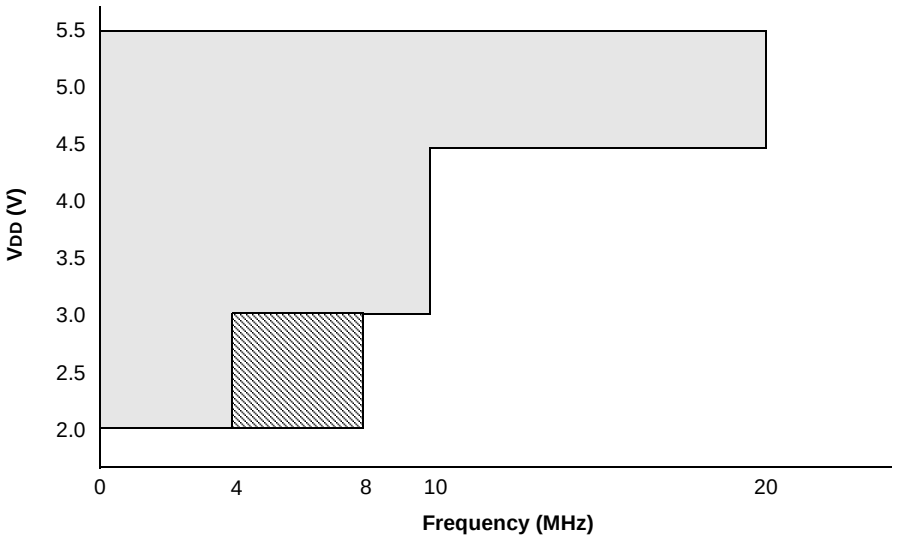

Note 1: The shaded region indicates the permissible combinations of voltage and frequency.

2: Cross-hatched area is for HFINTOSC and EC modes only.

FIGURE 15-2: PIC16F639 VOLTAGE-FREQUENCY GRAPH, -40°C ≤ TA ≤ +85°C

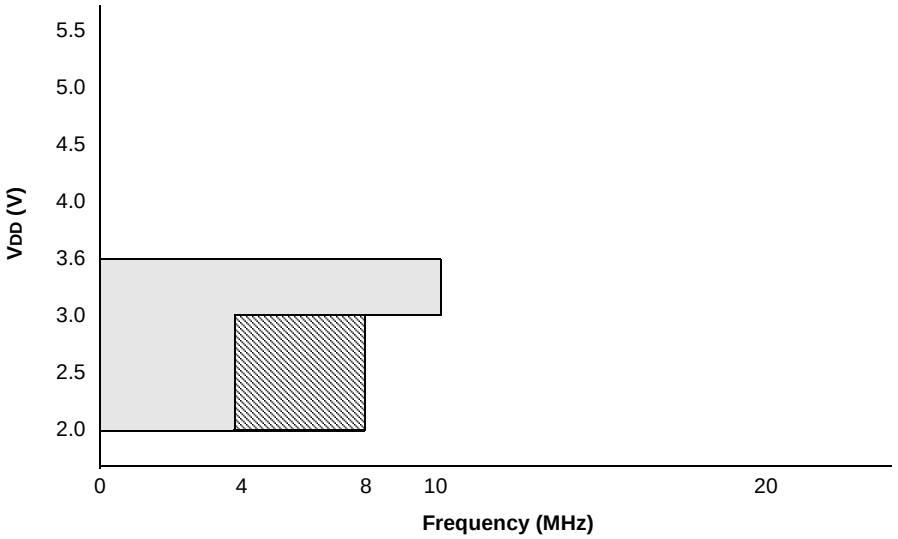

Note 1: The shaded region indicates the permissible combinations of voltage and frequency.

2: Cross-hatched area is for HFINTOSC and EC modes only.

© 2007 Microchip Technology Inc.

FIGURE 15-3: HFINTOSC FREQUENCY ACCURACY OVER DEVICE VDD AND TEMPERATURE

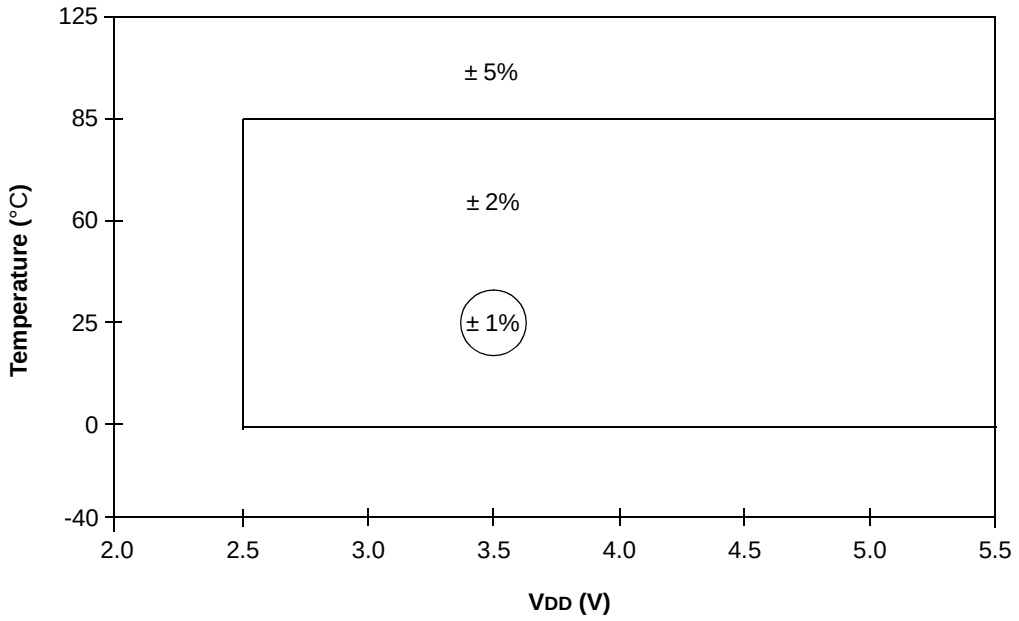

15.1 DC Characteristics: PIC12F635/PIC16F636-I (Industrial) PIC12F635/PIC16F636-E (Extended)

DC CHARACTERISTICS			Standard Operating Conditions (unless otherwise stated) Operating temperature -40°C ≤ TA ≤ +85°C for industrial -40°C ≤ TA ≤ +125°C for extended				
Param No.	**Sym**	**Characteristic**	**Min**	**Typ†**	**Max**	**Units**	**Conditions**
	VDD	**Supply Voltage**					
D001			2.0	—	5.5	V	FOSC < = 4 MHz
D001A			2.0	—	5.5	V	FOSC < = 8 MHz, HFINTOSC, EC
D001B			3.0	—	5.5	V	FOSC < = 10 MHz
D001C			4.5	—	5.5	V	FOSC < = 20 MHz
D002	VDR	**RAM Data Retention Voltage(1)**	1.5*	—	—	V	Device in Sleep mode
D003	VPOR	**VDD Start Voltage** to ensure internal Power-on Reset signal	—	VSS	—	V	See **Section 12.3 “Power-on Reset”** for details.
D004	SVDD	**VDD Rise Rate** to ensure internal Power-on Reset signal	0.05*	—	—	V/ms	See **Section 12.3 “Power-on Reset”** for details.
D005	VBOD	**Brown-out Reset**	2.0	2.1	2.2	V	

* These parameters are characterized but not tested.

† Data in “Typ” column is at 5.0V, 25°C unless otherwise stated. These parameters are for design guidance only and are not tested.

Note 1: This is the limit to which VDD can be lowered in Sleep mode without losing RAM data.

© 2007 Microchip Technology Inc.

15.2 DC Characteristics: PIC12F635/PIC16F636-I (Industrial)

DC CHARACTERISTICS			Standard Operating Conditions (unless otherwise stated) Operating temperature -40°C ≤ TA ≤ +85°C for industrial					
Param No.	Sym	Device Characteristics	Min	Typ†	Max	Units	Conditions	
							VDD	Note
D010	IDD	**Supply Current(1,2)**	—	11	16	μA	2.0	FOSC = 32.768 kHz LP Oscillator mode
			—	18	28	μA	3.0	
			—	35	54	μA	5.0	
D011			—	140	240	μA	2.0	FOSC = 1 MHz XT Oscillator mode
			—	220	380	μA	3.0	
			—	380	550	μA	5.0	
D012			—	260	360	μA	2.0	FOSC = 4 MHz XT Oscillator mode
			—	420	650	μA	3.0	
			—	0.8	1.1	mA	5.0	
D013			—	130	220	μA	2.0	FOSC = 1 MHz EC Oscillator mode
			—	215	360	μA	3.0	
			—	360	520	μA	5.0	
D014			—	220	340	μA	2.0	FOSC = 4 MHz EC Oscillator mode
			—	375	550	μA	3.0	
			—	0.65	1.0	mA	5.0	
D015			—	8	20	μA	2.0	FOSC = 31 kHz LFINTOSC mode
			—	16	40	μA	3.0	
			—	31	65	μA	5.0	
D016			—	340	450	μA	2.0	FOSC = 4 MHz HFINTOSC mode
			—	500	700	μA	3.0	
			—	0.8	1.2	mA	5.0	
D017			—	410	650	μA	2.0	FOSC = 8 MHz HFINTOSC mode
			—	700	950	μA	3.0	
			—	1.30	1.65	mA	5.0	
D018			—	230	400	μA	2.0	FOSC = 4 MHz EXTRC mode
			—	400	680	μA	3.0	
			—	0.63	1.1	mA	5.0	
D019			—	2.6	3.25	mA	4.5	FOSC = 20 MHz HS Oscillator mode
			—	2.6	3.25	mA	5.0	

† Data in “Typ” column is at 5.0V, 25°C unless otherwise stated. These parameters are for design guidance only and are not tested.

Note 1: The test conditions for all IDD measurements in Active Operation mode are: OSC1 = external square wave, from rail-to-rail; all I/O pins tri-stated, pulled to VDD; $\overline{\text{MCLR}}$ = VDD; WDT disabled. MCU only, Analog Front-End not included.

2: The supply current is mainly a function of the operating voltage and frequency. Other factors, such as I/O pin loading and switching rate, oscillator type, internal code execution pattern and temperature, also have an impact on the current consumption. MCU only, Analog Front-End not included.

3: The peripheral current is the sum of the base IDD or IPD and the additional current consumed when this peripheral is enabled. The peripheral Δ current can be determined by subtracting the base IDD or IPD current from this limit. Max values should be used when calculating total current consumption.

4: The power-down current in Sleep mode does not depend on the oscillator type. Power-down current is measured with the part in Sleep mode, with all I/O pins in high-impedance state and tied to VDD.

15.2 DC Characteristics: PIC12F635/PIC16F636-I (Industrial) (Continued)

DC CHARACTERISTICS			Standard Operating Conditions (unless otherwise stated) Operating temperature -40°C ≤ TA ≤ +85°C for industrial					
Param No.	**Sym**	**Device Characteristics**	**Min**	**Typ†**	**Max**	**Units**	**Conditions**	
							VDD	**Note**
D020	IPD	**Power-down Base Current(4)**	—	0.15	1.2	μA	2.0	WDT, BOR, Comparators, VREF and T1OSC disabled
			—	0.20	1.5	μA	3.0	
			—	0.35	1.8	μA	5.0	
D021			—	1.0	2.2	μA	2.0	WDT Current(1)
			—	2.0	4.0	μA	3.0	
			—	3.0	7.0	μA	5.0	
D022A			—	58	60	μA	3.0	BOR Current(1)
			—	109	122	μA	5.0	
D022B			—	22	28	μA	2.0	PLVD Current
			—	25	35	μA	3.0	
			—	33	45	μA	5.0	
D023			—	32	45	μA	2.0	Comparator Current(3)
			—	60	78	μA	3.0	
			—	120	160	μA	5.0	
D024A			—	30	36	μA	2.0	CVREF Current(1) (high-range)
			—	45	55	μA	3.0	
			—	75	95	μA	5.0	
D024B			—	39	47	μA	2.0	CVREF Current(1) (low-range)
			—	59	72	μA	3.0	
			—	98	124	μA	5.0	
D025			—	4.5	7.0	μA	2.0	T1OSC Current(3)
			—	5.0	8.0	μA	3.0	
			—	6.0	12	μA	5.0	

† Data in “Typ” column is at 5.0V, 25°C unless otherwise stated. These parameters are for design guidance only and are not tested.

Note 1: The test conditions for all IDD measurements in Active Operation mode are: OSC1 = external square wave, from rail-to-rail; all I/O pins tri-stated, pulled to VDD; $\overline{\text{MCLR}}$ = VDD; WDT disabled. MCU only, Analog Front-End not included.

2: The supply current is mainly a function of the operating voltage and frequency. Other factors, such as I/O pin loading and switching rate, oscillator type, internal code execution pattern and temperature, also have an impact on the current consumption. MCU only, Analog Front-End not included.

3: The peripheral current is the sum of the base IDD or IPD and the additional current consumed when this peripheral is enabled. The peripheral Δ current can be determined by subtracting the base IDD or IPD current from this limit. Max values should be used when calculating total current consumption.

4: The power-down current in Sleep mode does not depend on the oscillator type. Power-down current is measured with the part in Sleep mode, with all I/O pins in high-impedance state and tied to VDD.

© 2007 Microchip Technology Inc.

15.3 DC Characteristics: PIC12F635/PIC16F636-E (Extended)

DC CHARACTERISTICS			Standard Operating Conditions (unless otherwise stated) Operating temperature -40°C ≤ TA ≤ +125°C for extended					
Param No.	**Sym**	**Device Characteristics**	**Min**	**Typ†**	**Max**	**Units**	**Conditions**	
							VDD	**Note**
D010E	IDD	**Supply Current(1,2)**	—	11	16	µA	2.0	FOSC = 32.768 kHz LP Oscillator mode
			—	18	28	µA	3.0	
			—	35	54	µA	5.0	
D011E			—	140	240	µA	2.0	FOSC = 1 MHz XT Oscillator mode
			—	220	380	µA	3.0	
			—	380	550	µA	5.0	
D012E			—	260	360	µA	2.0	FOSC = 4 MHz XT Oscillator mode
			—	420	650	µA	3.0	
			—	0.8	1.1	mA	5.0	
D013E			—	130	220	µA	2.0	FOSC = 1 MHz EC Oscillator mode
			—	215	360	µA	3.0	
			—	360	520	µA	5.0	
D014E			—	220	340	µA	2.0	FOSC = 4 MHz EC Oscillator mode
			—	375	550	µA	3.0	
			—	0.65	1.0	mA	5.0	
D015E			—	8	20	µA	2.0	FOSC = 31 kHz LFINTOSC mode
			—	16	40	µA	3.0	
			—	31	65	µA	5.0	
D016E			—	340	450	µA	2.0	FOSC = 4 MHz HFINTOSC mode
			—	500	700	µA	3.0	
			—	0.8	1.2	mA	5.0	
D017E			—	410	650	µA	2.0	FOSC = 8 MHz HFINTOSC mode
			—	700	950	µA	3.0	
			—	1.30	1.65	mA	5.0	
D018E			—	230	100	µA	2.0	FOSC = 4 MHz EXTRC mode
			—	400	680	µA	3.0	
			—	0.63	1.1	mA	5.0	
D019E			—	2.6	3.25	mA	4.5	FOSC = 20 MHz HS Oscillator mode
			—	2.8	3.35	mA	5.0	

† Data in “Typ” column is at 5.0V, 25°C unless otherwise stated. These parameters are for design guidance only and are not tested.

Note 1: The test conditions for all IDD measurements in Active Operation mode are: OSC1 = external square wave, from rail-to-rail; all I/O pins tri-stated, pulled to VDD; $\overline{\text{MCLR}}$ = VDD; WDT disabled.

2: The supply current is mainly a function of the operating voltage and frequency. Other factors, such as I/O pin loading and switching rate, oscillator type, internal code execution pattern and temperature, also have an impact on the current consumption.

3: The peripheral current is the sum of the base IDD or IPD and the additional current consumed when this peripheral is enabled. The peripheral Δ current can be determined by subtracting the base IDD or IPD current from this limit. Max values should be used when calculating total current consumption.

4: The power-down current in Sleep mode does not depend on the oscillator type. Power-down current is measured with the part in Sleep mode, with all I/O pins in high-impedance state and tied to VDD.

15.3 DC Characteristics: PIC12F635/PIC16F636-E (Extended) (Continued)

DC CHARACTERISTICS			Standard Operating Conditions (unless otherwise stated) Operating temperature -40°C ≤ TA ≤ +125°C for extended					
Param No.	**Sym**	**Device Characteristics**	**Min**	**Typ†**	**Max**	**Units**	**Conditions**	
							VDD	**Note**
D020	IPD	**Power-down Base Current(4)**	—	0.15	1.2	μA	2.0	WDT, BOR, Comparators, VREF and T1OSC disabled
			—	0.20	1.5	μA	3.0	
			—	0.35	1.8	μA	5.0	
D021			—	1.0	17.5	μA	2.0	WDT Current(1)
			—	2.0	19	μA	3.0	
			—	3.0	22	μA	5.0	
D022A			—	42	60	μA	3.0	BOR Current(1)
			—	85	122	μA	5.0	
D022B			—	22	48	μA	2.0	PLVD Current
			—	25	55	μA	3.0	
			—	33	65	μA	5.0	
D023			—	32.3	45	μA	2.0	Comparator Current(1)
			—	60	78	μA	3.0	
			—	120	160	μA	5.0	
D024A			—	30	36	μA	2.0	CVREF Current(1) (high-range)
			—	45	55	μA	3.0	
			—	75	95	μA	5.0	
D024B			—	39	47	μA	2.0	CVREF Current(1) (low-range)
			—	59	72	μA	3.0	
			—	98	124	μA	5.0	
D025			—	4.5	25	μA	2.0	T1OSC Current(3)
			—	5.0	30	μA	3.0	
			—	6.0	40	μA	5.0	

† Data in “Typ” column is at 5.0V, 25°C unless otherwise stated. These parameters are for design guidance only and are not tested.

Note 1: The test conditions for all IDD measurements in Active Operation mode are: OSC1 = external square wave, from rail-to-rail; all I/O pins tri-stated, pulled to VDD; MCLR = VDD; WDT disabled.

2: The supply current is mainly a function of the operating voltage and frequency. Other factors, such as I/O pin loading and switching rate, oscillator type, internal code execution pattern and temperature, also have an impact on the current consumption.

3: The peripheral current is the sum of the base IDD or IPD and the additional current consumed when this peripheral is enabled. The peripheral Δ current can be determined by subtracting the base IDD or IPD current from this limit. Max values should be used when calculating total current consumption.

4: The power-down current in Sleep mode does not depend on the oscillator type. Power-down current is measured with the part in Sleep mode, with all I/O pins in high-impedance state and tied to VDD.

© 2007 Microchip Technology Inc.

15.4 DC Characteristics: PIC12F635/PIC16F636-I (Industrial) PIC12F635/PIC16F636-E (Extended)

DC CHARACTERISTICS			Standard Operating Conditions (unless otherwise stated) Operating temperature -40°C ≤ TA ≤ +85°C for industrial -40°C ≤ TA ≤ +125°C for extended				
Param No.	**Sym**	**Characteristic**	**Min**	**Typ†**	**Max**	**Units**	**Conditions**
	VIL	**Input Low Voltage**					
		I/O ports:					
D030		with TTL buffer	VSS	—	0.8	V	4.5V ≤ VDD ≤ 5.5V
D030A			VSS	—	0.15 VDD	V	Otherwise
D031		with Schmitt Trigger buffer	VSS	—	0.2 VDD	V	Entire range
D032		$\overline{\text{MCLR}}$, OSC1 (RC mode)	VSS	—	0.2 VDD	V	
D033		OSC1 (XT and LP modes)(1)	VSS	—	0.3	V	
D033A		OSC1 (HS mode)(1)	VSS	—	0.3 VDD	V	
	VIH	**Input High Voltage**					
		I/O ports:					
D040		with TTL buffer	2.0	—	VDD	V	4.5V ≤ VDD ≤ 5.5V
D040A			(0.25 VDD + 0.8)	—	VDD	V	Otherwise
D041		with Schmitt Trigger buffer	0.8 VDD	—	VDD	V	Entire range
D042		$\overline{\text{MCLR}}$	0.8 VDD	—	VDD	V	
D043		OSC1 (XT and LP modes)	1.6	—	VDD	V	**(Note 1)**
D043A		OSC1 (HS mode)	0.7 VDD	—	VDD	V	**(Note 1)**
D043B		OSC1 (RC mode)	0.9 VDD	—	VDD	V	
	IIL	**Input Leakage Current(2)**					
D060		I/O ports	—	± 0.1	± 1	μA	VSS ≤ VPIN ≤ VDD, Pin at high-impedance
D060A		Analog inputs	—	± 0.1	± 1	μA	VSS ≤ VPIN ≤ VDD
D060B		VREF	—	± 0.1	± 1	μA	VSS ≤ VPIN ≤ VDD
D061		$\overline{\text{MCLR}}$(3)	—	± 0.1	± 5	μA	VSS ≤ VPIN ≤ VDD
D063		OSC1	—	± 0.1	± 5	μA	VSS ≤ VPIN ≤ VDD, XT, HS and LP oscillator configuration
D070	IPUR	**PORTA Weak Pull-up Current**	50	250	400	μA	VDD = 5.0V, VPIN = VSS
D071	IPDR	**PORTA Weak Pull-down Current**	50	250	400	μA	VDD = 5.0V, VPIN = VDD
	VOL	**Output Low Voltage**					
D080		I/O ports	—	—	0.6	V	IOL = 8.5 mA, VDD = 4.5V (Ind.)
D083		OSC2/CLKOUT (RC mode)	—	—	0.6	V	IOL = 1.6 mA, VDD = 4.5V (Ind.) IOL = 1.2 mA, VDD = 4.5V (Ext.)

* These parameters are characterized but not tested.

† Data in "Typ" column is at 5.0V, 25°C unless otherwise stated. These parameters are for design guidance only and are not tested.

Note 1: In RC oscillator configuration, the OSC1/CLKIN pin is a Schmitt Trigger input. It is not recommended to use an external clock in RC mode.

2: Negative current is defined as current sourced by the pin.

3: The leakage current on the $\overline{\text{MCLR}}$ pin is strongly dependent on the applied voltage level. The specified levels represent normal operating conditions. Higher leakage current may be measured at different input voltages.

4: See **Section 9.4.1 "Using the Data EEPROM"** for additional information.

15.4 DC Characteristics: PIC12F635/PIC16F636-I (Industrial) PIC12F635/PIC16F636-E (Extended) (Continued)

DC CHARACTERISTICS			Standard Operating Conditions (unless otherwise stated) Operating temperature -40°C ≤ TA ≤ +85°C for industrial -40°C ≤ TA ≤ +125°C for extended				
Param No.	**Sym**	**Characteristic**	**Min**	**Typ†**	**Max**	**Units**	**Conditions**
	VOH	**Output High Voltage**					
D090		I/O ports	VDD – 0.7	—	—	V	IOH = -3.0 mA, VDD = 4.5V (Ind.)
D092		OSC2/CLKOUT (RC mode)	VDD – 0.7	—	—	V	IOH = -1.3 mA, VDD = 4.5V (Ind.) IOH = -1.0 mA, VDD = 4.5V (Ext.)
D100	IULP	**Ultra Low-power Wake-up Current**	—	200	—	nA	
		Capacitive Loading Specs on Output Pins					
D101	COSC2	OSC2 pin	—	—	15*	pF	In XT, HS and LP modes when external clock is used to drive OSC1
D101A	CIO	All I/O pins	—	—	50*	pF	
		Data EEPROM Memory					
D120	ED	Byte Endurance	100K	1M	—	E/W	-40°C ≤ TA ≤ +85°C
D120A	ED	Byte Endurance	10K	100K	—	E/W	+85°C ≤ TA ≤ +125°C
D121	VDRW	VDD for Read/Write	VMIN	—	5.5	V	Using EECON1 to read/write VMIN = Minimum operating voltage
D122	TDEW	Erase/Write cycle time	—	5	6	ms	
D123	TRETD	Characteristic Retention	40	—	—	Year	Provided no other specifications are violated
D124	TREF	Number of Total Erase/Write Cycles before Refresh(4)	1M	10M	—	E/W	-40°C ≤ TA ≤ +85°C
		Program Flash Memory					
D130	EP	Cell Endurance	10K	100K	—	E/W	-40°C ≤ TA ≤ +85°C
D130A	ED	Cell Endurance	1K	10K	—	E/W	+85°C ≤ TA ≤ +125°C
D131	VPR	VDD for Read	VMIN	—	5.5	V	VMIN = Minimum operating voltage
D132	VPEW	VDD for Erase/Write	4.5	—	5.5	V	
D133	TPEW	Erase/Write cycle time	—	2	2.5	ms	
D134	TRETD	Characteristic Retention	40	—	—	Year	Provided no other specifications are violated

* These parameters are characterized but not tested.

† Data in "Typ" column is at 5.0V, 25°C unless otherwise stated. These parameters are for design guidance only and are not tested.

Note 1: In RC oscillator configuration, the OSC1/CLKIN pin is a Schmitt Trigger input. It is not recommended to use an external clock in RC mode.

2: Negative current is defined as current sourced by the pin.

3: The leakage current on the $\overline{\text{MCLR}}$ pin is strongly dependent on the applied voltage level. The specified levels represent normal operating conditions. Higher leakage current may be measured at different input voltages.

4: See **Section 9.4.1 "Using the Data EEPROM"** for additional information.

© 2007 Microchip Technology Inc.

15.5 DC Characteristics: PIC16F639-I (Industrial)

DC CHARACTERISTICS			Standard Operating Conditions (unless otherwise stated) Operating temperature -40°C ≤ TA ≤ +85°C for industrial				
Param No.	**Sym**	**Characteristic**	**Min**	**Typ†**	**Max**	**Units**	**Conditions**
D001	VDD	**Supply Voltage**	2.0	—	3.6	V	FOSC ≤ 10 MHz
D001A	VDDT	**Supply Voltage (AFE)**	2.0	—	3.6	V	Analog Front-End VDD voltage. Treated as VDD in this document.
D002	VDR	**RAM Data Retention Voltage(1)**	1.5*	—	—	V	Device in Sleep mode
D003	VPOR	**VDD Start Voltage** to ensure internal Power-on Reset signal	—	VSS	—	V	See **Section 12.3 "Power-on Reset"** for details.
D003A	VPORT	**VDD Start Voltage (AFE)** to ensure internal Power-on Reset signal	—	—	1.8	V	Analog Front-End POR voltage.
D004	SVDD	**VDD Rise Rate** to ensure internal Power-on Reset signal	0.05*	—	—	V/ms	See **Section 12.3 "Power-on Reset"** for details.
D005	VBOD	**Brown-out Reset**	2.0	2.1	2.2	V	
D006	RM	**Turn-on Resistance** or Modulation Transistor	—	50	100	Ohm	VDD = 3.0V
D007	RPU	**Digital Input Pull-Up Resistor** $\overline{CS}$, SCLK	50	200	350	kOhm	VDD = 3.6V
D008	IAIL	**Analog Input Leakage Current** LCX, LCY, LCZ LCCOM	 — —	 — —	 ±1 ±1	 µA µA	 VDD = 3.6V, VSS ≤ VIN ≤ VDD, tested at Sleep mode

* These parameters are characterized but not tested.

† Data in "Typ" column is at 3.0V, 25°C unless otherwise stated. These parameters are for design guidance only and are not tested.

Note 1: This is the limit to which VDD can be lowered in Sleep mode without losing RAM data.

15.6 DC Characteristics: PIC16F639-I (Industrial)

DC CHARACTERISTICS			Standard Operating Conditions (unless otherwise stated) Operating temperature -40°C ≤ TA ≤ +85°C for industrial Supply Voltage 2.0V ≤ VDD ≤ 3.6V					
Param No.	Sym	Device Characteristics	Min	Typ†	Max	Units	Conditions	
							VDD	Note
D010	IDD	**Supply Current**(1,2,3)	—	11	16	µA	2.0	FOSC = 32.768 kHz LP Oscillator mode
			—	18	28	µA	3.0	
D011			—	140	240	µA	2.0	FOSC = 1 MHz XT Oscillator mode
			—	220	380	µA	3.0	
D012			—	260	360	µA	2.0	FOSC = 4 MHz XT Oscillator mode
			—	420	650	µA	3.0	
D013			—	130	220	µA	2.0	FOSC = 1 MHz EC Oscillator mode
			—	215	360	µA	3.0	
D014			—	220	340	µA	2.0	FOSC = 4 MHz EC Oscillator mode
			—	375	550	µA	3.0	
D015			—	8	20	µA	2.0	FOSC = 31 kHz LFINTOSC mode
			—	16	40	µA	3.0	
D016			—	340	450	µA	2.0	FOSC = 4 MHz HFINTOSC mode
			—	500	700	µA	3.0	
D017			—	230	400	µA	2.0	FOSC = 4 MHz EXTRC mode
			—	400	680	µA	3.0	
D020	IPD	**Power-down Base Current**(4)	—	0.15	1.2	µA	2.0	WDT, BOR, Comparators, VREF and T1OSC disabled (excludes AFE)
			—	0.20	1.5	µA	3.0	
D021	IWDT		—	1.2	2.2	µA	2.0	WDT Current(1)
			—	2.0	4.0	µA	3.0	
D022A	IBOR		—	42	60	µA	3.0	BOR Current(1)
D022B	ILVD		—	22	28	µA	2.0	PLVD Current
			—	25	35	µA	3.0	
D023	ICMP		—	32	45	µA	2.0	Comparator Current(1)
			—	60	78	µA	3.0	
D024A	IVREFHS		—	30	36	µA	2.0	CVREF Current(1) (high-range)
			—	45	55	µA	3.0	
D024B	IVREFLS		—	39	47	µA	2.0	CVREF Current(1) (low-range)
			—	59	72	µA	3.0	
D025	IT1OSC		—	4.5	7.0	µA	2.0	T1OSC Current(1)
			—	5.0	8.0	µA	3.0	
D026	IACT	**Active Current** of AFE only (receiving signal) 1 LC Input Channel Signal 3 LC Input Channel Signals	 — —	 10 13	 — 18	 µA µA	 3.6 3.6	$\overline{CS}$ = VDD; Input = Continuous Wave (CW); Amplitude = 300 mVPP. All channels enabled.
D027	ISTDBY	**Standby Current** of AFE only (not receiving signal) 1 LC Input Channel Enabled 2 LC Input Channels Enabled 3 LC Input Channels Enabled	 — — —	 3 4 5	 5 6 7	 µA µA µA	 3.6 3.6 3.6	$\overline{CS}$ = VDD; $\overline{ALERT}$ = VDD
D028	ISLEEP	**Sleep Current** of AFE only	—	0.2	1	µA	3.6	$\overline{CS}$ = VDD; $\overline{ALERT}$ = VDD

† Data in "Typ" column is at 3.0V, 25°C unless otherwise stated. These parameters are for design guidance only and are not tested.

Note 1: The test conditions for all IDD measurements in active operation mode are: OSC1 = external square wave, from rail-to-rail; all I/O pins tri-stated, pulled to VDD; $\overline{MCLR}$ = VDD; WDT disabled. MCU only, Analog Front-End not included.

2: The supply current is mainly a function of the operating voltage and frequency. Other factors, such as I/O pin loading and switching rate, oscillator type, internal code execution pattern and temperature, also have an impact on the current consumption. MCU only, Analog Front-End not included.

3: The peripheral current is the sum of the base IDD or IPD and the additional current consumed when this peripheral is enabled. The peripheral Δ current can be determined by subtracting the base IDD or IPD current from this limit. Max values should be used when calculating total current consumption.

4: The power-down current in Sleep mode does not depend on the oscillator type. Power-down current is measured with the part in Sleep mode, with all I/O pins in high-impedance state and tied to VDD.

© 2007 Microchip Technology Inc.

15.7 DC Characteristics: PIC16F639-I (Industrial)

DC CHARACTERISTICS			Standard Operating Conditions (unless otherwise stated) Operating temperature -40°C ≤ TA ≤ +85°C for industrial Supply Voltage 2.0V ≤ VDD ≤ 3.6V				
Param No.	**Sym**	**Characteristic**	**Min**	**Typ†**	**Max**	**Units**	**Conditions**
	VIL	**Input Low Voltage**					
		I/O ports:					
D030A		with TTL buffer	VSS	—	0.15 VDD	V	
D031		with Schmitt Trigger buffer	VSS	—	0.2 VDD	V	
D032		$\overline{\text{MCLR}}$, OSC1 (RC mode)	VSS	—	0.2 VDD	V	
D033		OSC1 (XT and LP modes)(1)	VSS	—	0.3	V	
D033A		OSC1 (HS mode)(1)	VSS	—	0.3 VDD	V	
D034		**Digital Input Low Voltage**	VSS	—	0.3 VDD	V	Analog Front-End section
	VIH	**Input High Voltage**					
		I/O ports:					
D040		with TTL buffer					
D040A			(0.25 VDD + 0.8)	—	VDD	V	
D041		with Schmitt Trigger buffer	0.8 VDD	—	VDD	V	
D042		$\overline{\text{MCLR}}$	0.8 VDD	—	VDD	V	
D043		OSC1 (XT and LP modes)	1.6	—	VDD	V	**(Note 1)**
D043A		OSC1 (HS mode)	0.7 VDD	—	VDD	V	**(Note 1)**
D043B		OSC1 (RC mode)	0.9 VDD	—	VDD	V	
		Digital Input High Voltage					Analog Front-End section
D044		SCLK, $\overline{\text{CS}}$, SDIO for Analog Front-End (AFE)	0.8 VDD	—	VDD	V	
	IIL	**Input Leakage Current(2)**					
D060		I/O ports	—	± 0.1	± 1	µA	VSS ≤ VPIN ≤ VDD, Pin at high-impedance
D060A		Analog inputs	—	± 0.1	± 1	µA	VSS ≤ VPIN ≤ VDD
D060B		VREF	—	± 0.1	± 1	µA	VSS ≤ VPIN ≤ VDD
D061		$\overline{\text{MCLR}}$(3)	—	± 0.1	± 5	µA	VSS ≤ VPIN ≤ VDD
D063		OSC1	—	± 0.1	± 5	µA	VSS ≤ VPIN ≤ VDD, XT, HS and LP oscillator configuration
		Digital Input Leakage Current(2)					VDD = 3.6V, Analog Front-End section
D064		SDI for Analog Front-End (AFE)	—	—	± 1	µA	VSS ≤ VPIN ≤ VDD
D064A		SCLK, $\overline{\text{CS}}$ for Analog Front-End (AFE)	—	—	± 1	µA	VPIN ≤ VDD
D070	IPUR	**PORTA Weak Pull-up Current**	50*	250	400	µA	VDD = 3.6V, VPIN = VSS
D071	IPDR	**PORTA Weak Pull-down Current**	50	250	400	µA	VDD = 3.6V, VPIN = VDD
	VOL	**Output Low Voltage**					
D080		I/O ports	—	—	0.6	V	IOL = 8.5 mA, VDD = 3.6V (Ind.)
D083		OSC2/CLKOUT (RC mode)	—	—	0.6	V	IOL = 1.6 mA, VDD = 3.6V (Ind.) IOL = 1.2 mA, VDD = 3.6V (Ext.)
		Digital Output Low Voltage					Analog Front-End section
D084		$\overline{\text{ALERT}}$, LFDATA/SDIO for Analog Front-End (AFE)	—	—	VSS + 0.4	V	IOL = 1.0 mA, VDD = 2.0V

* These parameters are characterized but not tested.

† Data in "Typ" column is at 3.0V, 25°C unless otherwise stated. These parameters are for design guidance only and are not tested.

Note 1: In RC oscillator configuration, the OSC1/CLKIN pin is a Schmitt Trigger input. It is not recommended to use an external clock in RC mode.

2: Negative current is defined as current sourced by the pin.

3: The leakage current on the $\overline{\text{MCLR}}$ pin is strongly dependent on the applied voltage level. The specified levels represent normal operating conditions. Higher leakage current may be measured at different input voltages.

4: See **Section 9.4.1 "Using the Data EEPROM"** for additional information

15.7 DC Characteristics: PIC16F639-I (Industrial) (Continued)

DC CHARACTERISTICS			Standard Operating Conditions (unless otherwise stated) Operating temperature -40°C ≤ TA ≤ +85°C for industrial Supply Voltage 2.0V ≤ VDD ≤ 3.6V				
Param No.	**Sym**	**Characteristic**	**Min**	**Typ†**	**Max**	**Units**	**Conditions**
	VOH	**Output High Voltage**					
D090		I/O ports	VDD – 0.7	—	—	V	IOH = -3.0 mA, VDD = 3.6V (Ind.)
D092		OSC2/CLKOUT (RC mode)	VDD – 0.7	—	—	V	IOH = -1.3 mA, VDD = 3.6V (Ind.) IOH = -1.0 mA, VDD = 3.6V (Ext.)
		Digital Output High Voltage					Analog Front-End (AFE) section
D093		LFDATA/SDIO for Analog Front-End (AFE)	VDD – 0.5	—	—	V	IOH = -400 µA, VDD = 2.0V
		Capacitive Loading Specs on Output Pins					
D100	COSC2	OSC2 pin	—	—	15*	pF	In XT, HS and LP modes when external clock is used to drive OSC1
D101	CIO	All I/O pins	—	—	50*	pF	
D102	IULP	**Ultra Low-power Wake-up Current**	—	200	—	nA	
		Data EEPROM Memory					
D120	ED	Byte Endurance	100K	1M	—	E/W	-40°C ≤ TA ≤ +85°C
D120A	ED	Byte Endurance	10K	100K	—	E/W	+85°C ≤ TA ≤ +125°C
D121	VDRW	VDD for Read/Write	VMIN	—	5.5	V	Using EECON1 to read/write VMIN = Minimum operating voltage
D122	TDEW	Erase/Write cycle time	—	5	6	ms	
D123	TRETD	Characteristic Retention	40	—	—	Year	Provided no other specifications are violated
D124	TREF	Number of Total Erase/Write Cycles before Refresh(1)	1M	10M	—	E/W	-40°C ≤ TA ≤ +85°C
		Program Flash Memory					
D130	EP	Cell Endurance	10K	100K	—	E/W	-40°C ≤ TA ≤ +85°C
D130A	ED	Cell Endurance	1K	10K	—	E/W	+85°C ≤ TA ≤ +125°C
D131	VPR	VDD for Read	VMIN	—	5.5	V	VMIN = Minimum operating voltage
D132	VPEW	VDD for Erase/Write	4.5	—	5.5	V	
D133	TPEW	Erase/Write cycle time	—	2	2.5	ms	
D134	TRETD	Characteristic Retention	40	—	—	Year	Provided no other specifications are violated

* These parameters are characterized but not tested.

† Data in "Typ" column is at 3.0V, 25°C unless otherwise stated. These parameters are for design guidance only and are not tested.

Note 1: In RC oscillator configuration, the OSC1/CLKIN pin is a Schmitt Trigger input. It is not recommended to use an external clock in RC mode.

2: Negative current is defined as current sourced by the pin.

3: The leakage current on the MCLR pin is strongly dependent on the applied voltage level. The specified levels represent normal operating conditions. Higher leakage current may be measured at different input voltages.

4: See **Section 9.4.1 "Using the Data EEPROM"** for additional information

© 2007 Microchip Technology Inc.

15.8 Thermal Considerations

Standard Operating Conditions (unless otherwise stated) Operating temperature -40°C ≤ TA ≤ +125°C						
Param No.	**Sym**	**Characteristic**		**Typ**	**Units**	**Conditions**
TH01	θJA	Thermal Resistance Junction to Ambient	PIC12F635	84.6	°C/W	8-pin PDIP package
				163.0	°C/W	8-pin SOIC package
				52.4	°C/W	8-pin DFN 4x4x0.9 mm package
				52.4	°C/W	8-pin DFN-S 6x5 mm package
			PIC16F636	69.8	°C/W	14-pin PDIP package
				85.0	°C/W	14-pin SOIC package
				100.4	°C/W	14-pin TSSOP package
				46.3	°C/W	16-pin QFN 4x0.9mm package
			PIC16F639	108.1	°C/W	20-pin SSOP package
TH02	θJC	Thermal Resistance Junction to Case	PIC12F635	41.2	°C/W	8-pin PDIP package
				38.8	°C/W	8-pin SOIC package
				3.0	°C/W	8-pin DFN 4x4x0.9 mm package
				3.0	°C/W	8-pin DFN-S 6x5 mm package
			PIC16F636	32.5	°C/W	14-pin PDIP package
				31.0	°C/W	14-pin SOIC package
				31.7	°C/W	14-pin TSSOP package
				2.6	°C/W	16-pin QFN 4x0.9mm package
			PIC16F639	32.2	°C/W	20-pin SSOP package
TH03	TJ	Junction Temperature		150	°C	For derated power calculations
TH04	PD	Power Dissipation		—	W	PD = PINTERNAL + PI/O
TH05	PINTERNAL	Internal Power Dissipation		—	W	PINTERNAL = IDD x VDD **(NOTE 1)**
TH06	PI/O	I/O Power Dissipation		—	W	PI/O = Σ (IOL * VOL) + Σ (IOH * (VDD - VOH))
TH07	PDER	Derated Power		—	W	PDER = (TJ - TA)/θJA **(NOTE 2, 3)**

Note 1: IDD is current to run the chip alone without driving any load on the output pins.

2: TA = Ambient Temperature.

3: Maximum allowable power dissipation is the lower value of either the absolute maximum total power dissipation or derated power (PDER).

15.9 Timing Parameter Symbology

The timing parameter symbols have been created with one of the following formats:

1. TppS2ppS
2. TppS

T			
F	Frequency	T	Time

Lowercase letters (pp) and their meanings:

pp			
cc	CCP1	osc	OSC1
ck	CLKOUT	rd	$\overline{\text{RD}}$
cs	$\overline{\text{CS}}$	rw	$\overline{\text{RD}}$ or $\overline{\text{WR}}$
di	SDI	sc	SCLK
do	SDO	ss	$\overline{\text{SS}}$
dt	Data in	t0	T0CKI
io	I/O port	t1	T1CKI
mc	$\overline{\text{MCLR}}$	wr	$\overline{\text{WR}}$

Uppercase letters and their meanings:

S			
F	Fall	P	Period
H	High	R	Rise
I	Invalid (High-impedance)	V	Valid
L	Low	Z	High-impedance

FIGURE 15-4: LOAD CONDITIONS

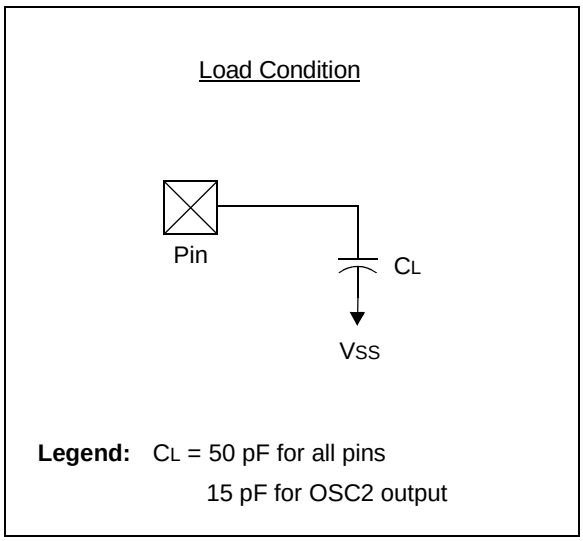

© 2007 Microchip Technology Inc.

15.10 AC Characteristics: PIC12F635/PIC16F636/639 (Industrial, Extended)

FIGURE 15-5: CLOCK TIMING

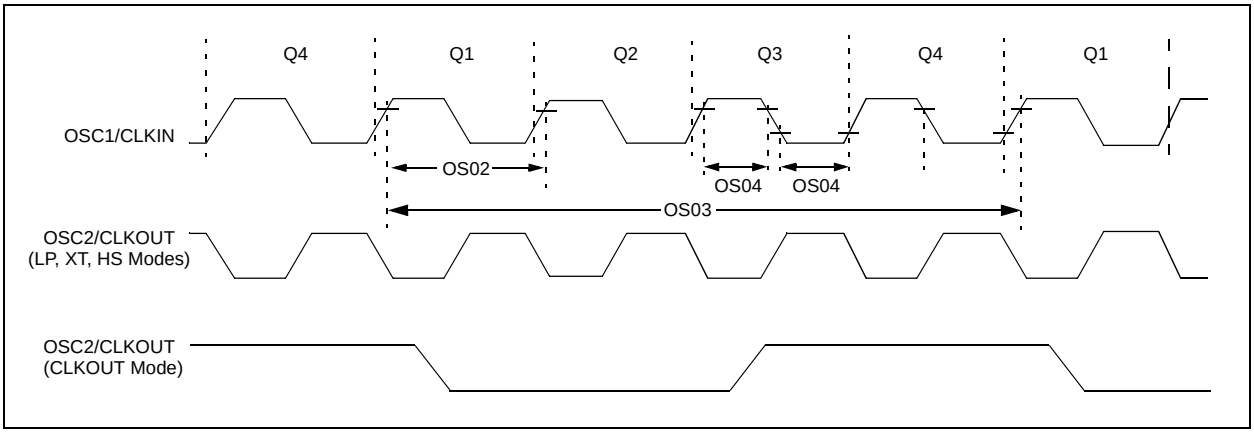

TABLE 15-1: CLOCK OSCILLATOR TIMING REQUIREMENTS

Standard Operating Conditions (unless otherwise stated)
Operating temperature -40°C ≤ TA ≤ +125°C

Param No.	Sym	Characteristic	Min	Typ†	Max	Units	Conditions
OS01	FOSC	External CLKIN Frequency(1)	DC	—	37	kHz	LP Oscillator mode
			DC	—	4	MHz	XT Oscillator mode
			DC	—	20	MHz	HS Oscillator mode
			DC	—	20	MHz	EC Oscillator mode
		Oscillator Frequency(1)	—	32.768	—	kHz	LP Oscillator mode
			0.1	—	4	MHz	XT Oscillator mode
			1	—	20	MHz	HS Oscillator mode
			DC	—	4	MHz	RC Oscillator mode
OS02	TOSC	External CLKIN Period(1)	27	—	∞	µs	LP Oscillator mode
			250	—	∞	ns	XT Oscillator mode
			50	—	∞	ns	HS Oscillator mode
			50	—	∞	ns	EC Oscillator mode
		Oscillator Period(1)	—	30.5	—	µs	LP Oscillator mode
			250	—	10,000	ns	XT Oscillator mode
			50	—	1,000	ns	HS Oscillator mode
			250	—	—	ns	RC Oscillator mode
OS03	TCY	Instruction Cycle Time(1)	200	TCY	DC	ns	TCY = 4/FOSC
OS04*	TosH, TosL	External CLKIN High, External CLKIN Low	2	—	—	µs	LP oscillator
			100	—	—	ns	XT oscillator
			20	—	—	ns	HS oscillator
OS05*	TosR, TosF	External CLKIN Rise, External CLKIN Fall	0	—	50	ns	LP oscillator
			0	—	25	ns	XT oscillator
			0	—	15	ns	HS oscillator

* These parameters are characterized but not tested.

† Data in “Typ” column is at 5V, 25°C unless otherwise stated. These parameters are for design guidance only and are not tested.

Note 1: Instruction cycle period (TCY) equals four times the input oscillator time base period. All specified values are based on characterization data for that particular oscillator type under standard operating conditions with the device executing code. Exceeding these specified limits may result in an unstable oscillator operation and/or higher than expected current consumption. All devices are tested to operate at “min” values with an external clock applied to OSC1 pin. When an external clock input is used, the “max” cycle time limit is “DC” (no clock) for all devices.

TABLE 15-2: OSCILLATOR PARAMETERS

Standard Operating Conditions (unless otherwise stated) Operating Temperature -40°C ≤ TA ≤ +125°C								
Param No.	**Sym**	**Characteristic**	**Freq Tolerance**	**Min**	**Typ†**	**Max**	**Units**	**Conditions**
OS06	TWARM	Internal Oscillator Switch when running(3)	—	—	—	2	TOSC	Slowest clock
OS07	TSC	Fail-Safe Sample Clock Period(1)	—	—	21	—	ms	LFINTOSC/64
OS08	HFOSC	Internal Calibrated HFINTOSC Frequency(2)	±1%	7.92	8.0	8.08	MHz	VDD = 3.5V, 25°C
			±2%	7.84	8.0	8.16	MHz	2.5V ≤ VDD ≤ 5.5V, 0°C ≤ TA ≤ +85°C
			±5%	7.60	8.0	8.40	MHz	2.0V ≤ VDD ≤ 5.5V, -40°C ≤ TA ≤ +85°C (Ind.), -40°C ≤ TA ≤ +125°C (Ext.)
OS09*	LFOSC	Internal Uncalibrated LFINTOSC Frequency	—	15	31	45	kHz	
OS10*	TIOSCST	HFINTOSC Oscillator Wake-up from Sleep Start-up Time	—	5.5	12	24	µs	VDD = 2.0V, -40°C to +85°C
			—	3.5	7	14	µs	VDD = 3.0V, -40°C to +85°C
			—	3	6	11	µs	VDD = 5.0V, -40°C to +85°C

* These parameters are characterized but not tested.

† Data in “Typ” column is at 5.0V, 25°C unless otherwise stated. These parameters are for design guidance only and are not tested.

Note 1: Instruction cycle period (TCY) equals four times the input oscillator time base period. All specified values are based on characterization data for that particular oscillator type under standard operating conditions with the device executing code. Exceeding these specified limits may result in an unstable oscillator operation and/or higher than expected current consumption. All devices are tested to operate at “min” values with an external clock applied to the OSC1 pin. When an external clock input is used, the “max” cycle time limit is “DC” (no clock) for all devices.

2: To ensure these oscillator frequency tolerances, VDD and VSS must be capacitively decoupled as close to the device as possible. 0.1 µF and 0.01 µF values in parallel are recommended.

3: By design.

© 2007 Microchip Technology Inc.

FIGURE 15-6: CLKOUT AND I/O TIMING

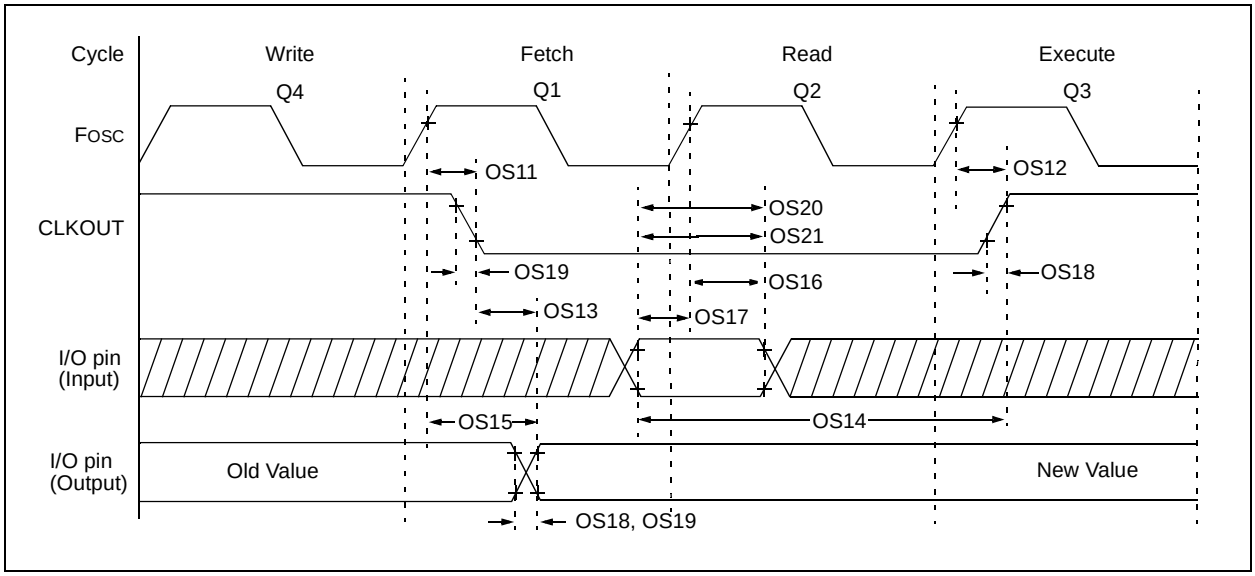

TABLE 15-3: CLKOUT AND I/O TIMING PARAMETERS

Standard Operating Conditions (unless otherwise stated) Operating Temperature -40°C ≤ TA ≤ +125°C							
Param No.	**Sym**	**Characteristic**	**Min**	**Typ†**	**Max**	**Units**	**Conditions**
OS11	TOSH2CKL	FOSC↑ to CLKOUT↓ (1)	—	—	70	ns	VDD = 5.0V
OS12	TOSH2CKH	FOSC↑ to CLKOUT↑ (1)	—	—	72	ns	VDD = 5.0V
OS13	TCKL2IOV	CLKOUT↓ to Port out valid(1)	—	—	20	ns	
OS14	TIOV2CKH	Port input valid before CLKOUT↑(1)	TOSC + 200 ns	—	—	ns	
OS15*	TOSH2IOV	FOSC↑ (Q1 cycle) to Port out valid	—	50	70	ns	VDD = 5.0V
OS16	TOSH2IOI	FOSC↑ (Q2 cycle) to Port input invalid (I/O in hold time)	50	—	—	ns	VDD = 5.0V
OS17	TIOV2OSH	Port input valid to FOSC↑ (Q2 cycle) (I/O in setup time)	20	—	—	ns	
OS18	TIOR	Port output rise time(2)	— —	40 15	72 32	ns	VDD = 2.0V VDD = 5.0V
OS19	TIOF	Port output fall time(2)	— —	28 15	55 30	ns	VDD = 2.0V VDD = 5.0V
OS20*	TINP	INT pin input high or low time	25	—	—	ns	
OS21*	TRAP	PORTA interrupt-on-change new input level time	TCY	—	—	ns	

* These parameters are characterized but not tested.

† Data in “Typ” column is at 5.0V, 25°C unless otherwise stated.

Note 1: Measurements are taken in RC mode where CLKOUT output is 4 x TOSC.

2: Includes OSC2 in CLKOUT mode.

FIGURE 15-7: RESET, WATCHDOG TIMER, OSCILLATOR START-UP TIMER AND POWER-UP TIMER TIMING

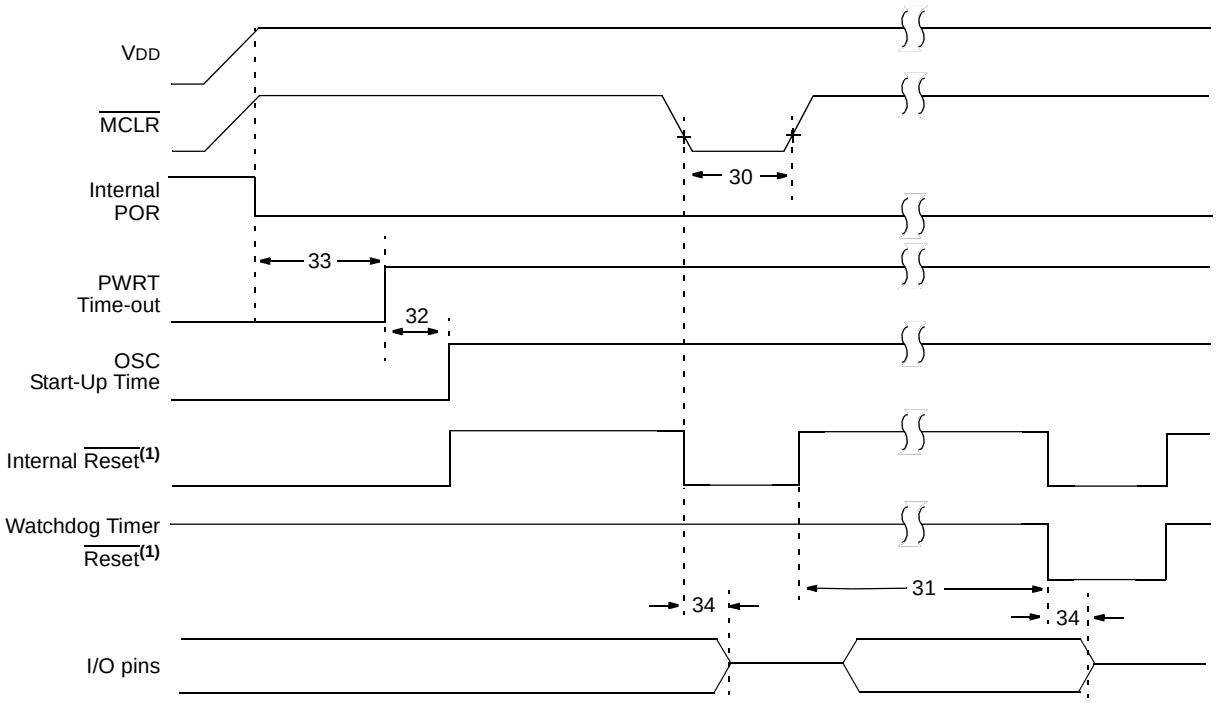

Note 1: Asserted low.

FIGURE 15-8: BROWN-OUT RESET TIMING AND CHARACTERISTICS

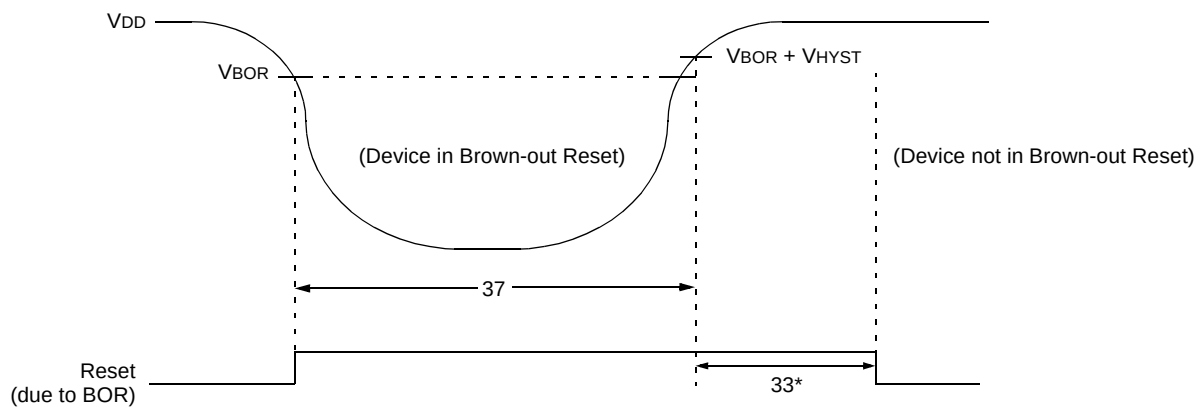

* 64 ms delay only if $\overline{\text{PWRTE}}$ bit in the Configuration Word register is programmed to '0'.

© 2007 Microchip Technology Inc.

TABLE 15-4: RESET, WATCHDOG TIMER, OSCILLATOR START-UP TIMER, POWER-UP TIMER AND BROWN-OUT RESET PARAMETERS

Standard Operating Conditions (unless otherwise stated) Operating Temperature -40°C ≤ TA ≤ +125°C							
Param No.	**Sym**	**Characteristic**	**Min**	**Typ†**	**Max**	**Units**	**Conditions**
30	TMCL	$\overline{\text{MCLR}}$ Pulse Width (low)	2 5	— —	— —	µs µs	VDD = 5V, -40°C to +85°C VDD = 5V
31	TWDT	Watchdog Timer Time-out Period (No Prescaler)	10 10	16 16	29 31	ms ms	VDD = 5V, -40°C to +85°C VDD = 5V
32	TOST	Oscillation Start-up Timer Period(1, 2)	—	1024	—	TOSC	**(NOTE 3)**
33*	TPWRT	Power-up Timer Period	40	65	140	ms	
34*	TIOZ	I/O High-impedance from $\overline{\text{MCLR}}$ Low or Watchdog Timer Reset	—	—	2.0	µs	
35	VBOR	Brown-out Reset Voltage	2.0	—	2.2	V	**(NOTE 4)**
36*	VHYST	Brown-out Reset Hysteresis	—	50	—	mV	
37*	TBOR	Brown-out Reset Minimum Detection Period	100	—	—	µs	VDD ≤ VBOR

* These parameters are characterized but not tested.

† Data in “Typ” column is at 5V, 25°C unless otherwise stated. These parameters are for design guidance only and are not tested.

Note 1: Instruction cycle period (TCY) equals four times the input oscillator time base period. All specified values are based on characterization data for that particular oscillator type under standard operating conditions with the device executing code. Exceeding these specified limits may result in an unstable oscillator operation and/or higher than expected current consumption. All devices are tested to operate at “min” values with an external clock applied to the OSC1 pin. When an external clock input is used, the “max” cycle time limit is “DC” (no clock) for all devices.

2: By design.

3: Period of the slower clock.

4: To ensure these voltage tolerances, VDD and VSS must be capacitively decoupled as close to the device as possible. 0.1 µF and 0.01 µF values in parallel are recommended.

FIGURE 15-9: TIMER0 AND TIMER1 EXTERNAL CLOCK TIMINGS

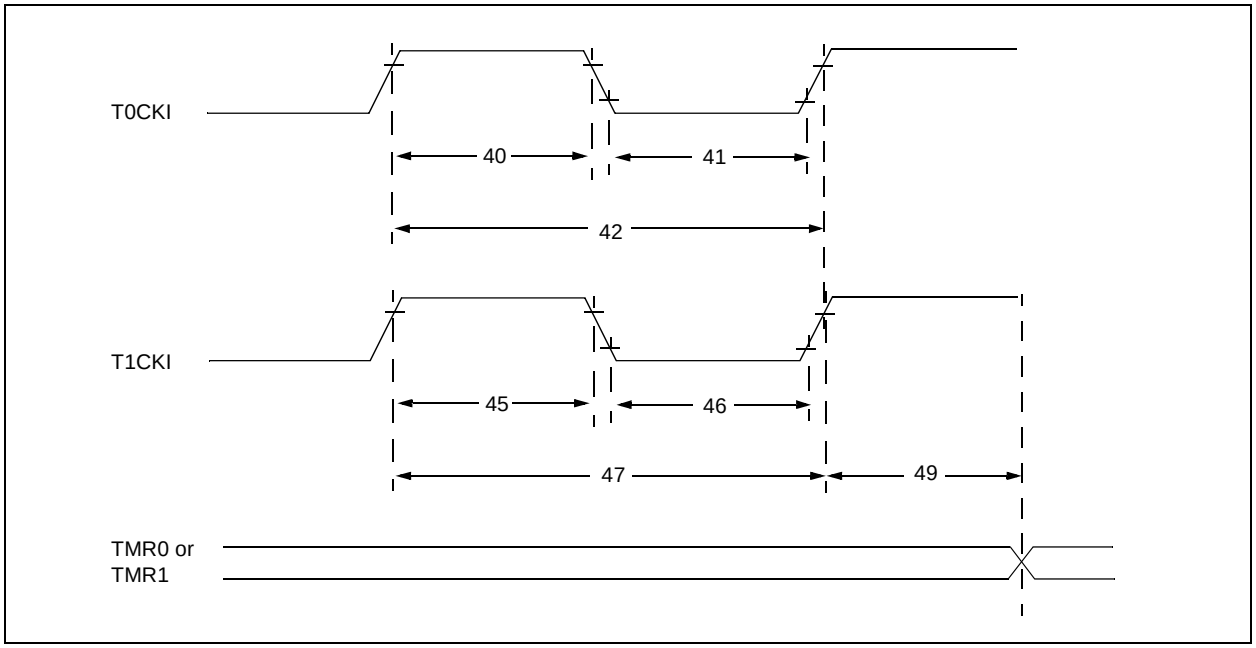

TABLE 15-5: TIMER0 AND TIMER1 EXTERNAL CLOCK REQUIREMENTS

Standard Operating Conditions (unless otherwise stated)
Operating Temperature -40°C ≤ TA ≤ +125°C

Param No.	Sym	Characteristic		Min	Typ†	Max	Units	Conditions
40*	TT0H	T0CKI High Pulse Width	No Prescaler	0.5 TCY + 20	—	—	ns	
			With Prescaler	10	—	—	ns	
41*	TT0L	T0CKI Low Pulse Width	No Prescaler	0.5 TCY + 20	—	—	ns	
			With Prescaler	10	—	—	ns	
42*	TT0P	T0CKI Period		Greater of: 20 or $\frac{T_{CY} + 40}{N}$	—	—	ns	N = prescale value (2, 4, ..., 256)
45*	TT1H	T1CKI High Time	Synchronous, No Prescaler	0.5 TCY + 20	—	—	ns	
			Synchronous, with Prescaler	15	—	—	ns	
			Asynchronous	30	—	—	ns	
46*	TT1L	T1CKI Low Time	Synchronous, No Prescaler	0.5 TCY + 20	—	—	ns	
			Synchronous, with Prescaler	15	—	—	ns	
			Asynchronous	30	—	—	ns	
47*	TT1P	T1CKI Input Period	Synchronous	Greater of: 30 or $\frac{T_{CY} + 40}{N}$	—	—	ns	N = prescale value (1, 2, 4, 8)
			Asynchronous	60	—	—	ns	
48	FT1	Timer1 Oscillator Input Frequency Range (oscillator enabled by setting bit T1OSCEN)		—	32.768	—	kHz	
49*	TCKEZTMR1	Delay from External Clock Edge to Timer Increment		2 TOSC	—	7 TOSC	—	Timers in Sync mode

* These parameters are characterized but not tested.

† Data in “Typ” column is at 5V, 25°C unless otherwise stated. These parameters are for design guidance only and are not tested.

© 2007 Microchip Technology Inc.

TABLE 15-6: COMPARATOR SPECIFICATIONS

Standard Operating Conditions (unless otherwise stated) Operating Temperature -40°C ≤ TA ≤ +125°C								
Param No.	**Sym**	**Characteristics**		**Min**	**Typ†**	**Max**	**Units**	**Comments**
CM01	VOS	Input Offset Voltage		—	± 5.0	± 10	mV	(VDD - 1.5)/2
CM02	VCM	Input Common Mode Voltage		0	—	VDD – 1.5	V	
CM03*	CMRR	Common Mode Rejection Ratio		+55	—	—	dB	
CM04*	TRT	Response Time	Falling	—	150	600	ns	**(NOTE 1)**
			Rising	—	200	1000	ns	
CM05*	TMC2COV	Comparator Mode Change to Output Valid		—	—	10	µs	

* These parameters are characterized but not tested.

† Data in "Typ" column is at 5V, 25°C unless otherwise stated. These parameters are for design guidance only and are not tested.

Note 1: Response time is measured with one comparator input at (VDD - 1.5)/2 - 100 mV to (VDD - 1.5)/2 + 20 mV.

TABLE 15-7: COMPARATOR VOLTAGE REFERENCE (CVREF) SPECIFICATIONS

Standard Operating Conditions (unless otherwise stated) Operating temperature -40°C ≤ TA ≤ +125°C							
Param No.	**Sym**	**Characteristics**	**Min**	**Typ†**	**Max**	**Units**	**Comments**
CV01*	CLSB	Step Size(2)	— —	VDD/24 VDD/32	— —	V V	Low Range (VRR = 1) High Range (VRR = 0)
CV02*	CACC	Absolute Accuracy	— —	— —	± 1/2 ± 1/2	LSb LSb	Low Range (VRR = 1) High Range (VRR = 0)
CV03*	CR	Unit Resistor Value (R)	—	2k	—	Ω	
CV04*	CST	Settling Time(1)	—	—	10	µs	

* These parameters are characterized but not tested.

† Data in "Typ" column is at 5V, 25°C unless otherwise stated. These parameters are for design guidance only and are not tested.

Note 1: Settling time measured while VRR = 1 and VR<3:0> transitions from '0000' to '1111'.

2: See **Section 7.11 "Comparator Voltage Reference"** for more information.

TABLE 15-8: PIC12F635/PIC16F636 PLVD CHARACTERISTICS:

DC CHARACTERISTICS			Standard Operating Conditions (unless otherwise stated) Operating Temperature -40°C ≤ TA ≤ +125°C Operating Voltage VDD Range 2.0V-5.5V				
Sym.	**Characteristic**		**Min**	**Typ†**	**Max**	**Units**	**Conditions**
VPLVD	PLVD Voltage	LVDL<2:0> = 001	1.900	2.0	2.125	V	
		LVDL<2:0> = 010	2.000	2.1	2.225	V	
		LVDL<2:0> = 011	2.100	2.2	2.325	V	
		LVDL<2:0> = 100	2.200	2.3	2.425	V	
		LVDL<2:0> = 101	3.825	4.0	4.200	V	
		LVDL<2:0> = 110	4.025	4.2	4.400	V	
		LVDL<2:0> = 111	4.325	4.5	4.700	V	
*TPLVDS	PLVD Settling time		—	50 25	—	µs	VDD = 5.0V VDD = 3.0V

* These parameters are characterized but not tested

† Data in 'Typ' column is at 5.0V, 25°C unless otherwise stated. These parameters are for design guidance only and are not tested.

TABLE 15-9: PIC16F639 PLVD CHARACTERISTICS:

DC CHARACTERISTICS			Standard Operating Conditions (unless otherwise stated) Operating Temperature -40°C ≤ TA ≤ +85°C Operating Voltage VDD Range 2.0V-5.5V				
Sym.	**Characteristic**		**Min**	**Typ†**	**Max**	**Units**	**Conditions**
VPLVD	PLVD Voltage	LVDL<2:0> = 001	1.900	2.0	2.100	V	
		LVDL<2:0> = 010	2.000	2.1	2.200	V	
		LVDL<2:0> = 011	2.100	2.2	2.300	V	
		LVDL<2:0> = 100	2.200	2.3	2.400	V	
		LVDL<2:0> = 101	3.825	4.0	4.175	V	
		LVDL<2:0> = 110	4.025	4.2	4.375	V	
		LVDL<2:0> = 111	4.325	4.5	4.675	V	
*TPLVDS	PLVD Settling time		—	50 25	—	µs	VDD = 5.0V VDD = 3.0V

* These parameters are characterized but not tested

† Data in “Typ” column is at 5.0V, 25°C unless otherwise stated. These parameters are for design guidance only and are not tested.

© 2007 Microchip Technology Inc.

15.11 AC Characteristics: Analog Front-End for PIC16F639 (Industrial)

AC CHARACTERISTICS			Standard Operating Conditions (unless otherwise stated) Supply Voltage 2.0V ≤ VDD ≤ 3.6V Operating temperature -40°C ≤ TAMB ≤ +85°C for industrial LC Signal Input Sinusoidal 300 mVPP Carrier Frequency 125 kHz LCCOM connected to VSS				
Param No.	**Sym.**	**Characteristic**	**Min**	**Typ†**	**Max**	**Units**	**Conditions**
AF01	VSENSE	LC Input Sensitivity	1	3.0	6	mVPP	VDD = 3.0V Output enable filter disabled AGCSIG = 0; MODMIN = 00 (33% modulation depth setting) Input = Continuous Wave (CW) Output = Logic level transition from low-to-high at sensitivity level for CW input.
AF02	VDE_Q	Coil de-Q'ing Voltage - RF Limiter (RFLM) must be active	3	—	5	V	VDD = 3.0V, Force IIN = 5 µA
AF03	RFLM	RF Limiter Turn-on Resistance (LCX, LCY, LCZ)	—	300	700	Ohm	VDD = 2.0V, VIN = 8 VDC
AF04	SADJ	Sensitivity Reduction	— —	0 -30	— —	dB dB	VDD = 3.0V No sensitivity reduction selected Max reduction selected Monotonic increment in attenuation value from setting = 0000 to 1111 by design
AF05	VIN_MOD	Minimum Modulation Depth 75% ± 12% 50% ± 12% 25% ± 12% 12% ± 12%	 63 38 13 0	 75 50 25 12	 87 62 37 24	 % % % %	VDD = 3.0V
AF06	CTUNX	LCX Tuning Capacitor	— 44	0 63	— 82	pF pF	VDD = 3.0V, Config. Reg. 1, bits <6:1> Setting = 000000 63 pF +/- 30% Config. Reg. 1, bits <6:1> Setting = 111111 63 steps, 1 pF/step Monotonic increment in capacitor value from setting = 000000 to 111111 by design
AF07	CTUNY	LCY Tuning Capacitor	— 44	0 63	— 82	pF pF	VDD = 3.0V, Config. Reg. 2, bits <6:1> Setting = 000000 63 pF +/- 30% Config. Reg. 2, bits <6:1> Setting = 111111 63 steps, 1 pF/step Monotonic increment in capacitor value from setting = 000000 to 111111 by design
AF08	CTUNZ	LCZ Tuning Capacitor	— 44	0 63	— 82	pF pF	VDD = 3.0V, Config. Reg. 3, bits<6:1> Setting = 000000 63 pF +/- 30% Config. Reg. 3, bits<6:1> Setting = 111111 63 steps, 1 pF/step Monotonic increment in capacitor value from setting = 000000 to 111111 by design
AF09	FCARRIER	Carrier frequency	—	125	—	kHz	Characterized at bench.
AF10	FMOD	Input modulation frequency	—	—	10	kHz	Input data rate, characterized at bench.
AF11	C_Q	Q of Trimming Capacitors	50*	—	—	pF	Characterized at bench test
AF12	TDR	Demodulator Charge Time (delay time of demodulated output to rise)	—	50	—	µs	VDD = 3.0V MOD depth setting = 50% Input conditions: Amplitude = 300 mVPP Modulation depth = 80%
AF13	TDF	Demodulator Discharge Time (delay time of demodulated output to fall)	—	50	—	µs	VDD = 3.0V MOD depth setting = 50% Input conditions: Amplitude = 300 mVPP Modulation depth = 80%

* Parameter is characterized but not tested.

† Data in "Typ" column is at 3.0V, 25°C unless otherwise stated. These parameters are for design guidance only and are not tested.

Note 1: Required output enable filter high time must account for input path analog delays (= **TOEH** - TDR + TDF).

2: Required output enable filter low time must account for input path analog delays (= **TOEL** + TDR - TDF).

15.11 AC Characteristics: Analog Front-End for PIC16F639 (Industrial) (Continued)

AC CHARACTERISTICS			Standard Operating Conditions (unless otherwise stated) Supply Voltage 2.0V ≤ VDD ≤ 3.6V Operating temperature -40°C ≤ TAMB ≤ +85°C for industrial LC Signal Input Sinusoidal 300 mVPP Carrier Frequency 125 kHz LCCOM connected to VSS				
Param No.	**Sym.**	**Characteristic**	**Min**	**Typ†**	**Max**	**Units**	**Conditions**
AF14	TLFDATAR	Rise time of LFDATA	—	0.5	—	µs	VDD = 3.0V Time is measured from 10% to 90% of amplitude
AF15	TLFDATAF	Fall time of LFDATA	—	0.5	—	µs	VDD = 3.0V Time is measured from 10% to 90% of amplitude
AF16	TAGC	AGC initialization time	—	3.5*	—	ms	Time required for AGC stabilization
AF17	TPAGC	High time after AGC settling time	—	62.5	—	µs	Equivalent to two Internal clock cycle (FOSC)
AF18	TSTAB	AGC stabilization time plus high time (after AGC settling time) (TAGC + TPAGC)	4	—	—	ms	AGC stabilization time
AF19	TGAP	Gap time after AGC settling time	200	—	—	µs	Typically 1 TE
AF20	TRDY	Time from exiting Sleep or POR to being ready to receive signal	—	—	50*	ms	
AF21	TPRES	Minimum time AGC level must be held after receiving AGC Preserve command	5*	—	—	ms	AGC level must not change more than 10% during TPRES.
AF22	FOSC	Internal RC oscillator frequency (±10%)	28.8	32	35.2	kHz	Internal clock trimmed at 32 kHz during test
AF23	TINACT	Inactivity timer time-out	14.4	16	17.6	ms	512 cycles of RC oscillator @ FOSC
AF24	TALARM	Alarm timer time-out	28.8	32	35.2	ms	1024 cycles of RC oscillator @ FOSC
AF25	RLC	**LC Pin Input Impedance** LCX, LCY, LCZ	—	1*	—	MOhm	Device in Standby mode
AF26	CIN	**LC Pin Input Capacitance** LCX, LCY, LCZ	—	24	—	pF	LCCOM grounded. Vdd = 3.0V, FCARRIER = 125 kHz
AF27	TE	Time element of pulse	100	—	—	µs	
AF28	TOEH	Minimum output enable filter high time **OEH (Bits Config0<7:6>)** 01 = 1 ms 10 = 2 ms 11 = 4 ms 00 = Filter Disabled	 32 (~1ms) 64 (~2ms) 128 (~4ms) —	 — — — —	 — — — —	clock count	RC oscillator = FOSC Viewed from the pin input: **(Note 1)**
AF29	TOEL	Minimum output enable filter low time **OEL (Bits Config0<5:4>)** 00 = 1 ms 01 = 1 ms 10 = 2 ms 11 = 4 ms	 32 (~1ms) 32 (~1ms) 64 (~2ms) 128 (~4ms)	 — — — —	 — — — —	clock count	RC oscillator = FOSC Viewed from the pin input: **(Note 2)**

* Parameter is characterized but not tested.

† Data in "Typ" column is at 3.0V, 25°C unless otherwise stated. These parameters are for design guidance only and are not tested.

Note 1: Required output enable filter high time must account for input path analog delays (= **TOEH** - TDR + TDF).

2: Required output enable filter low time must account for input path analog delays (= **TOEL** + TDR - TDF).

© 2007 Microchip Technology Inc.

15.11 AC Characteristics: Analog Front-End for PIC16F639 (Industrial) (Continued)

AC CHARACTERISTICS			Standard Operating Conditions (unless otherwise stated) Supply Voltage 2.0V ≤ V_{DD} ≤ 3.6V Operating temperature -40°C ≤ T_{AMB} ≤ +85°C for industrial LC Signal Input Sinusoidal 300 mV_{PP} Carrier Frequency 125 kHz LCCOM connected to V_{SS}				
Param No.	**Sym.**	**Characteristic**	**Min**	**Typ†**	**Max**	**Units**	**Conditions**
AF30	T_{OET}	Maximum output enable filter period **OEH OEL** T_{OEH} T_{OEL} 01 00 = 1 ms 1 ms (filter 1) 01 01 = 1 ms 1 ms (filter 1) 01 10 = 1 ms 2 ms (filter 2) 01 11 = 1 ms 4 ms (filter 3) 10 00 = 2 ms 1 ms (filter 4) 10 01 = 2 ms 1 ms (filter 4) 10 10 = 2 ms 2 ms (filter 5) 10 11 = 2 ms 4 ms (filter 6) 11 00 = 4 ms 1 ms (filter 7) 11 01 = 4 ms 1 ms (filter 7) 11 10 = 4 ms 2 ms (filter 8) 11 11 = 4 ms 4 ms (filter 9) 00 XX = Filter Disabled	 — — — — — — — — — — — — —	 — — — — — — — — — — — — —	 96 (~3ms) 96 (~3ms) 128 (~4ms) 192 (~6ms) 128 (~4ms) 128 (~4ms) 160 (~5ms) 250 (~8ms) 192 (~6ms) 192 (~6ms) 256 (~8ms) 320 (~10ms) —	 clock count	RC oscillator = F_{OSC} LFDATA output appears as long as input signal level is greater than V_{SENSE}.
AF31	I_{RSSI}	RSSI current output	— — — —	100 1 10 100	— — — —	µA µA µA µA	V_{DD} = 3.0V, V_{IN} = 0 to 4 V_{PP} Linearly increases with input signal amplitude. Tested at V_{IN} = 40 mV_{PP}, 400 mV_{PP}, and 4 V_{PP} V_{IN} = 40 mV_{PP} V_{IN} = 400 mV_{PP} V_{IN} = 4 V_{PP}
AF32	I_{RSSI}LR	RSSI current linearity	-15	—	15	%	Tested at room temperature only

* Parameter is characterized but not tested.

† Data in "Typ" column is at 3.0V, 25°C unless otherwise stated. These parameters are for design guidance only and are not tested.

Note 1: Required output enable filter high time must account for input path analog delays (= T_{OEH} - T_{DR} + T_{DF}).

2: Required output enable filter low time must account for input path analog delays (= T_{OEL} + T_{DR} - T_{DF}).

15.12 SPI Timing: Analog Front-End (AFE) for PIC16F639

AC CHARACTERISTICS			Standard Operating Conditions (unless otherwise stated) Supply Voltage 2.0V ≤ V_{DD} ≤ 3.6V Operating temperature -40°C ≤ T_{AMB} ≤ +85°C for industrial LC Signal Input Sinusoidal 300 mV_{PP} Carrier Frequency 125 kHz LCCOM connected to V_{SS}				
Param	**Sym**	**Characteristic**	**Min**	**Typ†**	**Max**	**Units**	**Conditions**
AF33	F_{SCLK}	SCLK Frequency	—	—	3	MHz	
AF34	T_{CSSC}	$\overline{CS}$ fall to first SCLK edge setup time	100	—	—	ns	
AF35	T_{SU}	SDI setup time	30	—	—	ns	
AF36	T_{HD}	SDI hold time	50	—	—	ns	
AF37	T_{HI}	SCLK high time	150	—	—	ns	
AF38	T_{LO}	SCLK low time	150	—	—	ns	
AF39	T_{DO}	SDO setup time	—	—	150	ns	
AF40	T_{SCCS}	SCLK last edge to $\overline{CS}$ rise setup time	100	—	—	ns	
AF41	T_{CSH}	$\overline{CS}$ high time	500	—	—	ns	
AF42	T_{CS1}	$\overline{CS}$ rise to SCLK edge setup time	50	—	—	ns	
AF43	T_{CS0}	SCLK edge to $\overline{CS}$ fall setup time	50	—	—	ns	SCLK edge when $\overline{CS}$ is high
AF44	T_{SPIR}	Rise time of SPI data (SPI Read command)	—	10	—	ns	V_{DD} = 3.0V. Time is measured from 10% to 90% of amplitude
AF45	T_{SPIF}	Fall time of SPI data (SPI Read command)	—	10	—	ns	V_{DD} = 3.0V. Time is measured from 90% to 10% of amplitude

* Parameter is characterized but not tested.

† Data in “Typ” column is at 3.0V, 25°C unless otherwise stated. These parameters are for design guidance only and are not tested.

© 2007 Microchip Technology Inc.

16.0 DC AND AC CHARACTERISTICS GRAPHS AND TABLES

The graphs and tables provided in this section are for **design guidance** and are **not tested**.

In some graphs or tables, the data presented are **outside specified operating range** (i.e., outside specified VDD range). This is for **information only** and devices are ensured to operate properly only within the specified range.

Note:	The graphs and tables provided following this note are a statistical summary based on a limited number of samples and are provided for informational purposes only. The performance characteristics listed herein are not tested or guaranteed. In some graphs or tables, the data presented may be outside the specified operating range (e.g., outside specified power supply range) and therefore, outside the warranted range.

"Typical" represents the mean of the distribution at 25°C. "Maximum" or "minimum" represents (mean + 3σ) or (mean - 3σ) respectively, where σ is a standard deviation, over each temperature range.

FIGURE 16-1: TYPICAL IDD vs. FOSC OVER VDD (EC MODE)

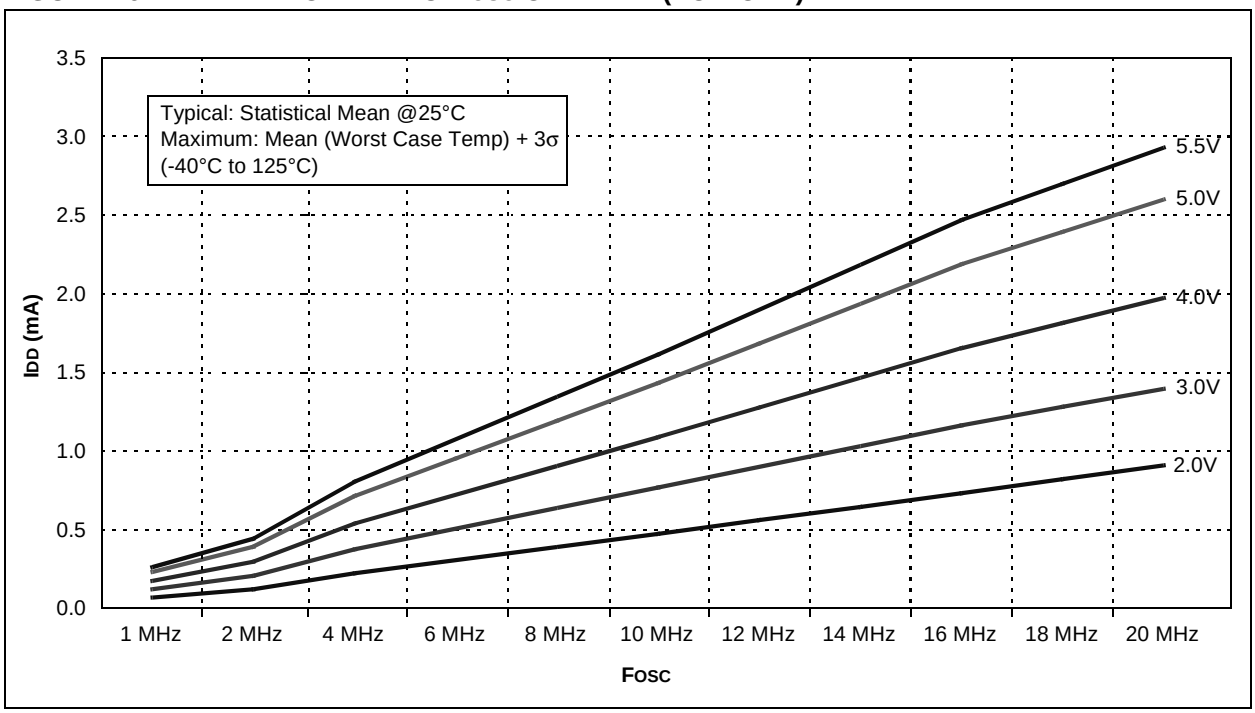

FIGURE 16-2: MAXIMUM IDD vs. FOSC OVER VDD (EC MODE)

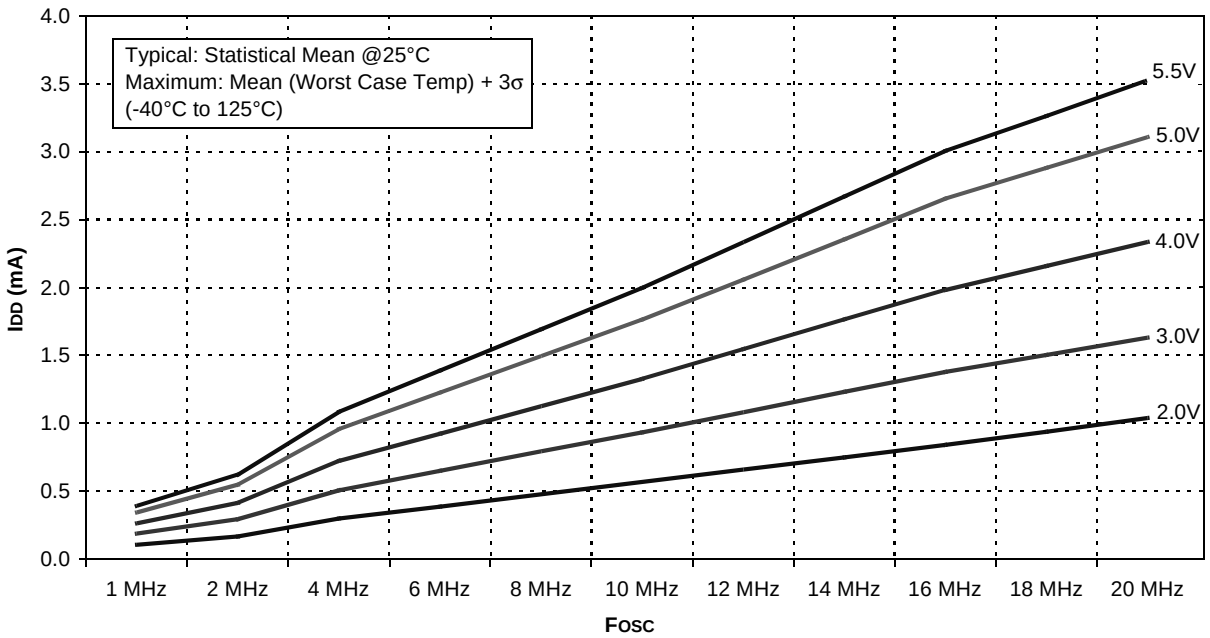

FIGURE 16-3: TYPICAL IDD vs. FOSC OVER VDD (HS MODE)

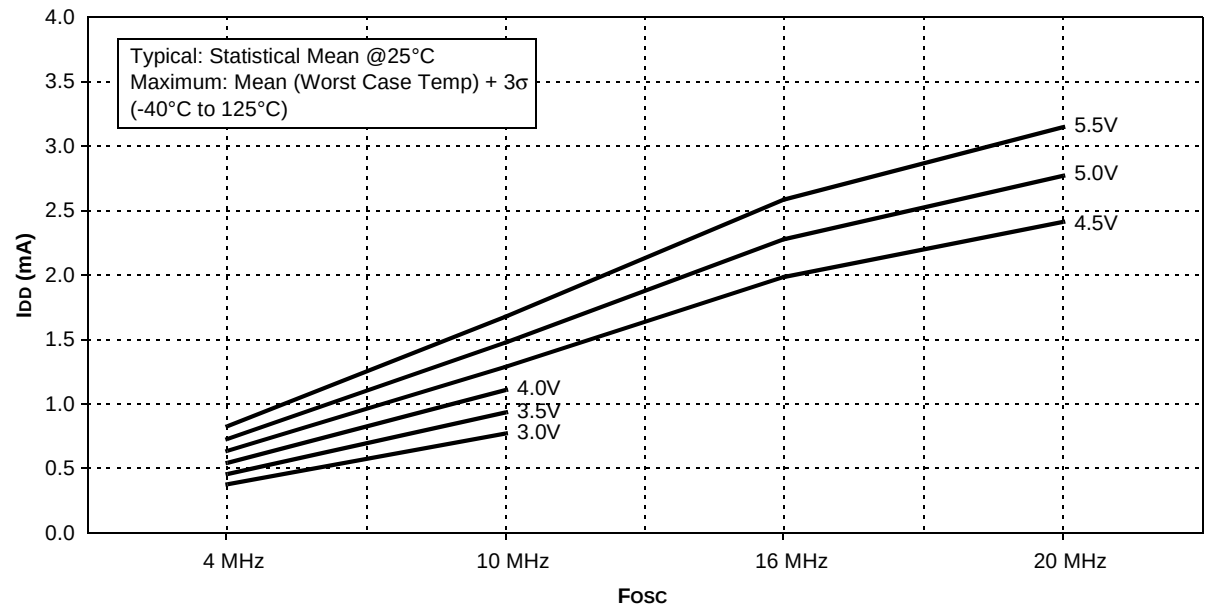

© 2007 Microchip Technology Inc.

FIGURE 16-4: MAXIMUM IDD vs. FOSC OVER VDD (HS MODE)

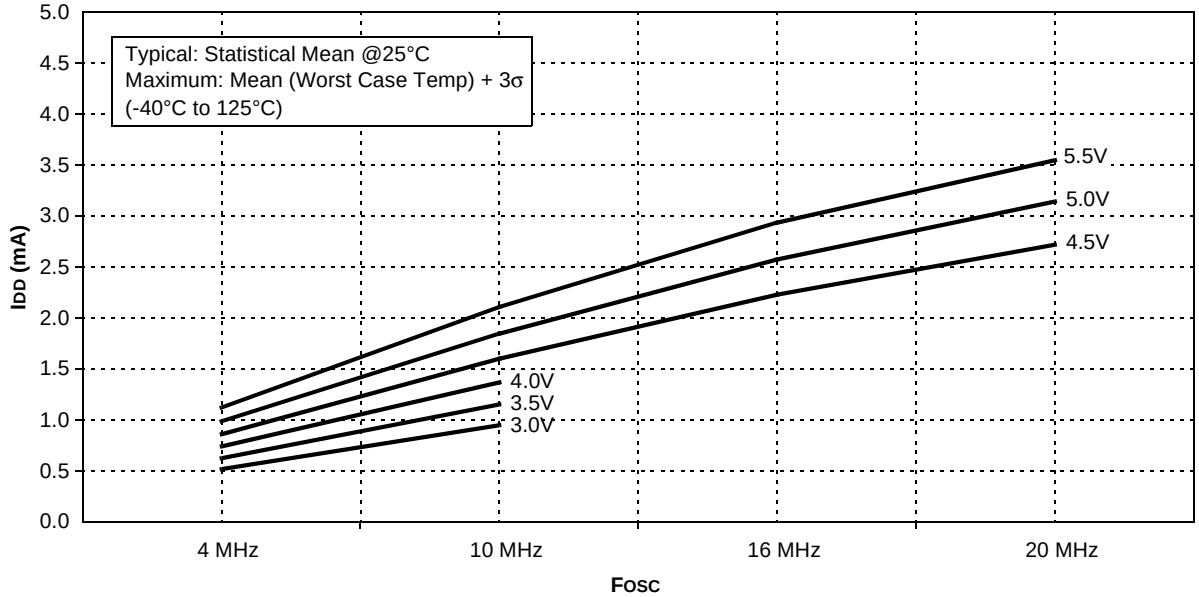

FIGURE 16-5: TYPICAL IDD vs. VDD OVER FOSC (XT MODE)

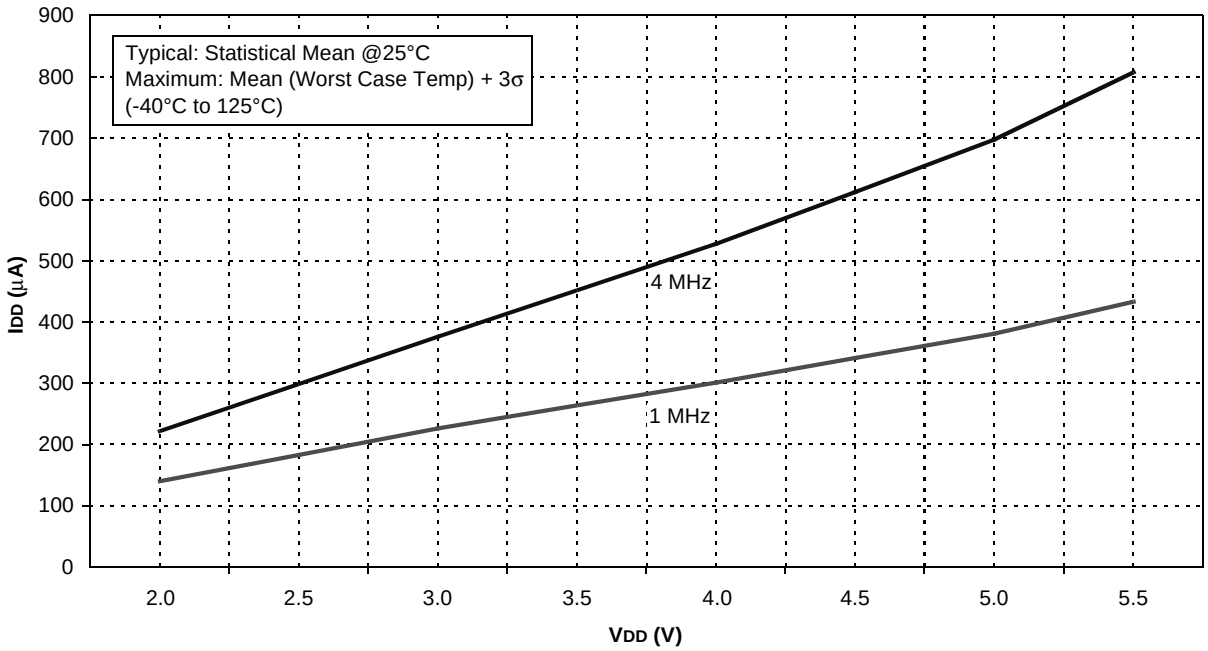

FIGURE 16-6: MAXIMUM IDD vs. VDD OVER FOSC (XT MODE)

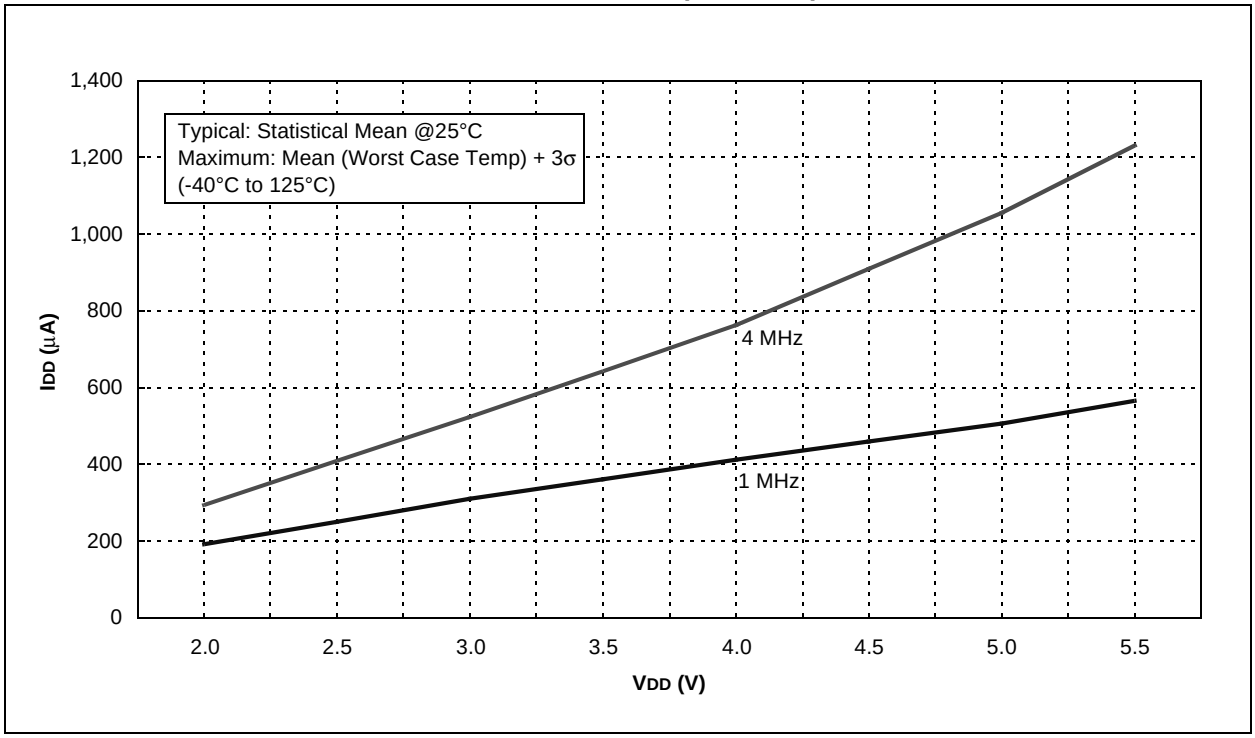

FIGURE 16-7: TYPICAL IDD vs. VDD OVER FOSC (EXTRC MODE)

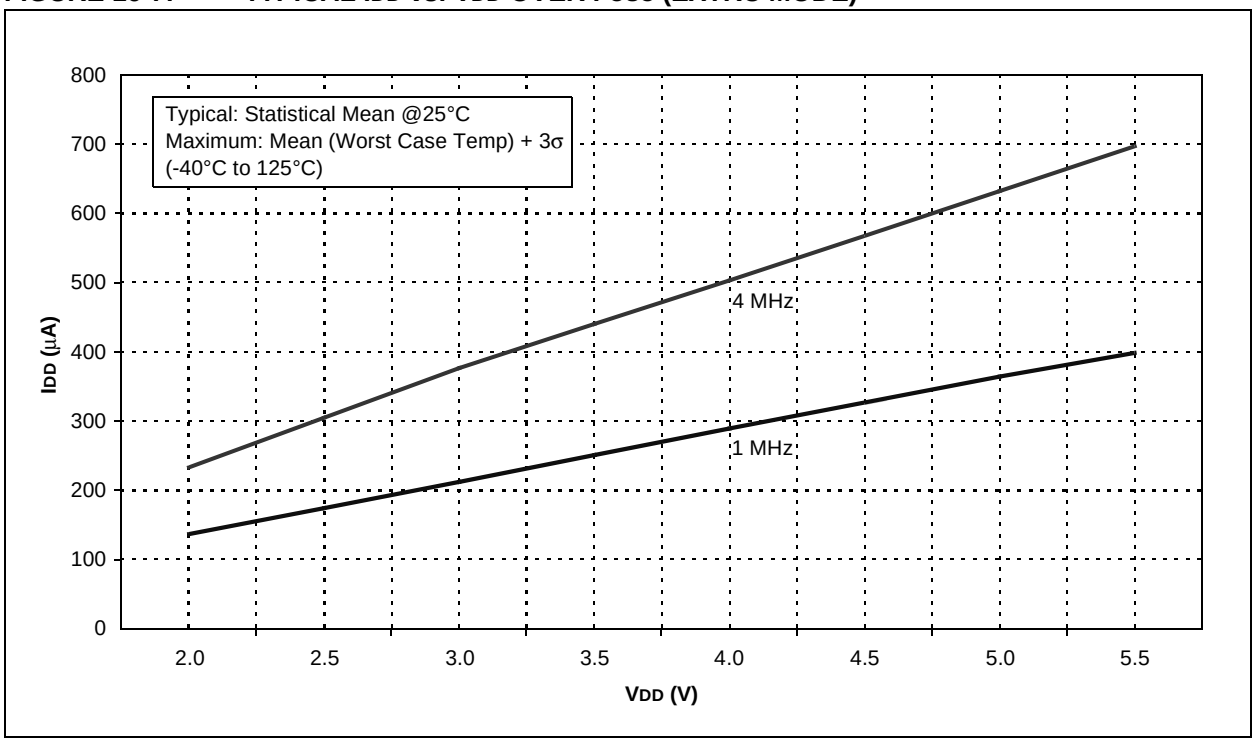

© 2007 Microchip Technology Inc.

FIGURE 16-8: MAXIMUM IDD vs. VDD OVER FOSC (EXTRC MODE)

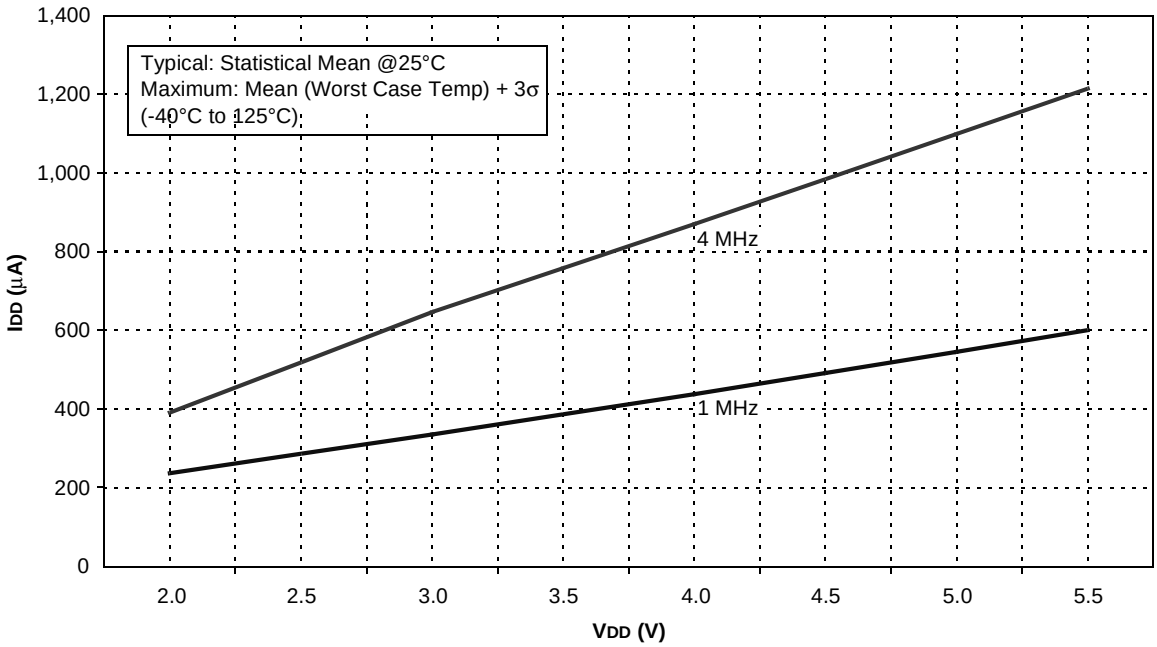

FIGURE 16-9: IDD vs. VDD OVER FOSC (LFINTOSC MODE, 31 kHz)

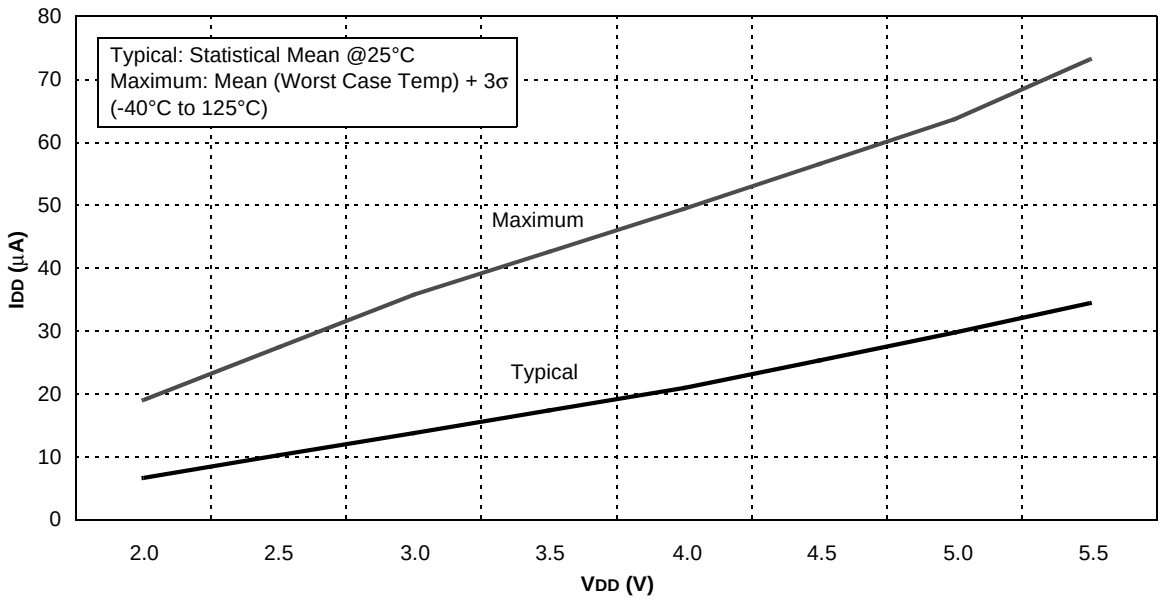

FIGURE 16-10: IDD vs. VDD OVER FOSC (LP MODE)

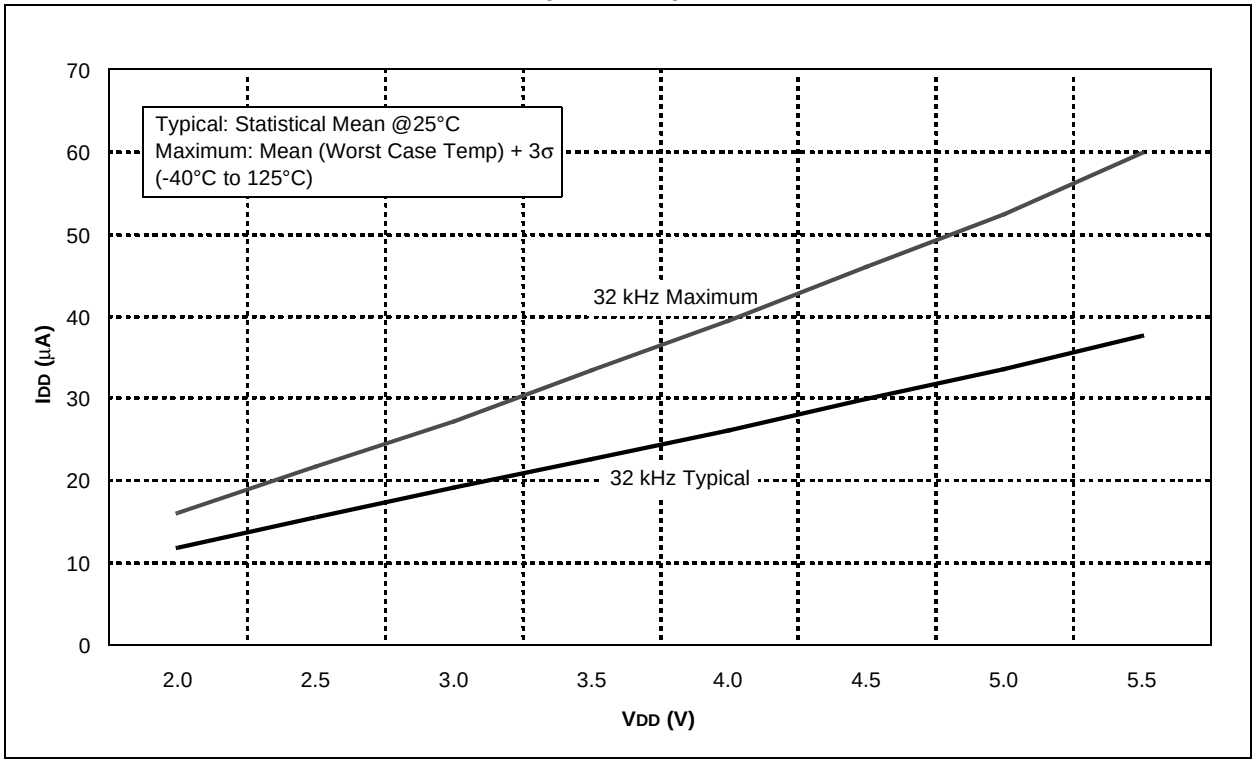

FIGURE 16-11: TYPICAL IDD vs. FOSC OVER VDD (HFINTOSC MODE)

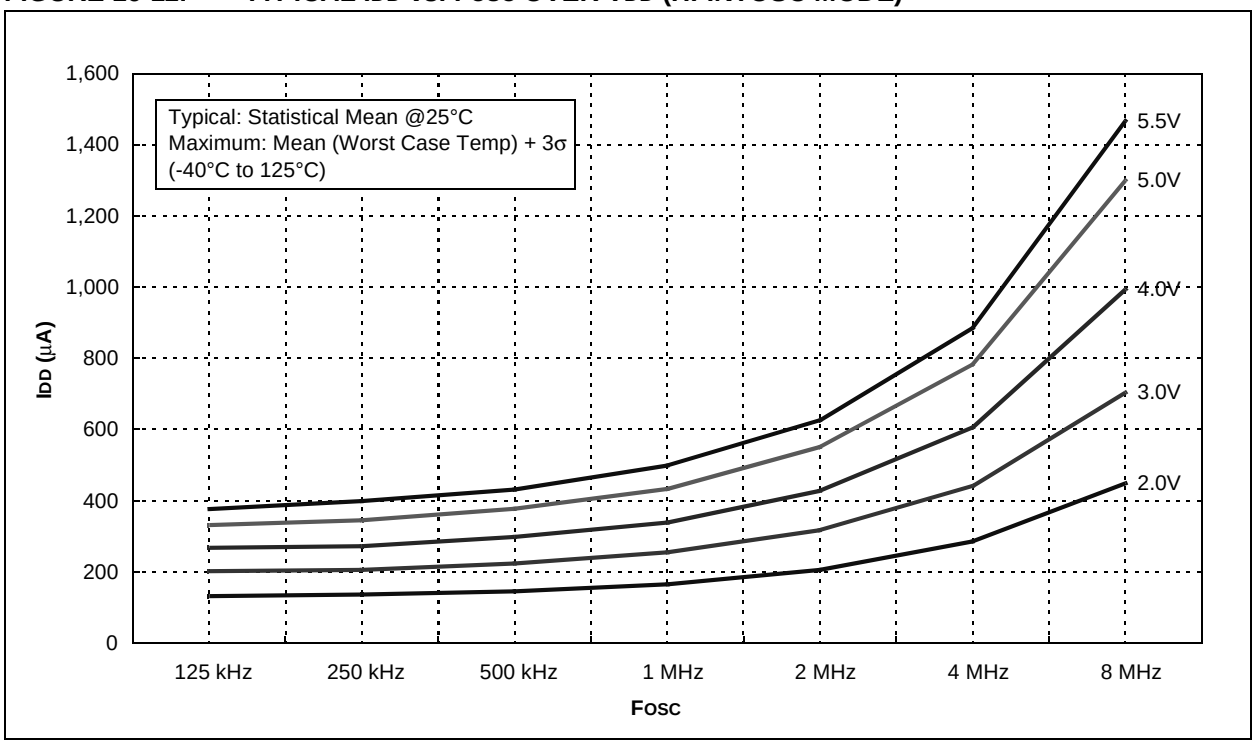

© 2007 Microchip Technology Inc.

FIGURE 16-12: MAXIMUM IDD vs. FOSC OVER VDD (HFINTOSC MODE)

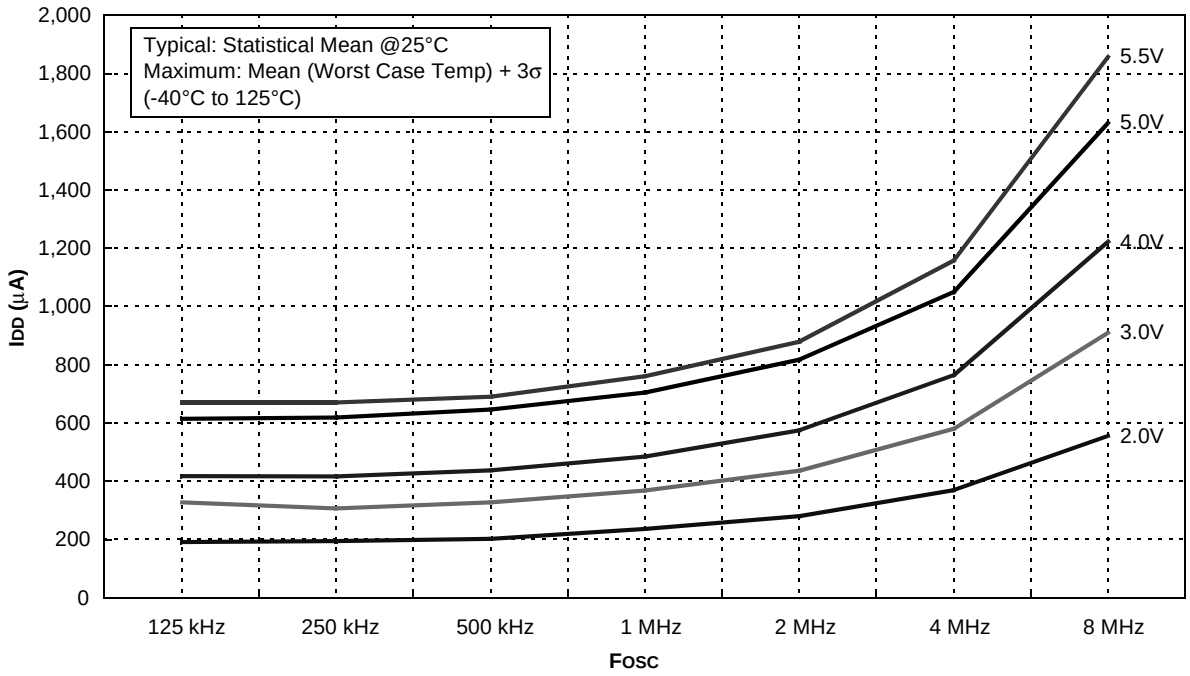

FIGURE 16-13: TYPICAL IPD vs. VDD (SLEEP MODE, ALL PERIPHERALS DISABLED)

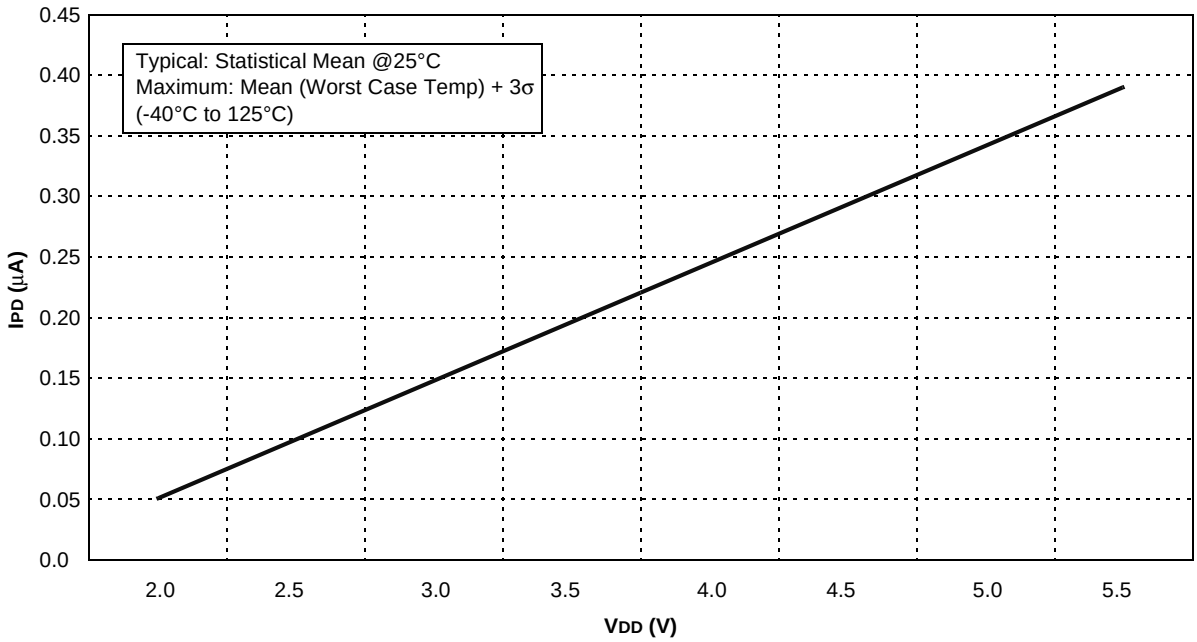

FIGURE 16-14: MAXIMUM IPD VS. VDD (SLEEP MODE, ALL PERIPHERALS DISABLED)

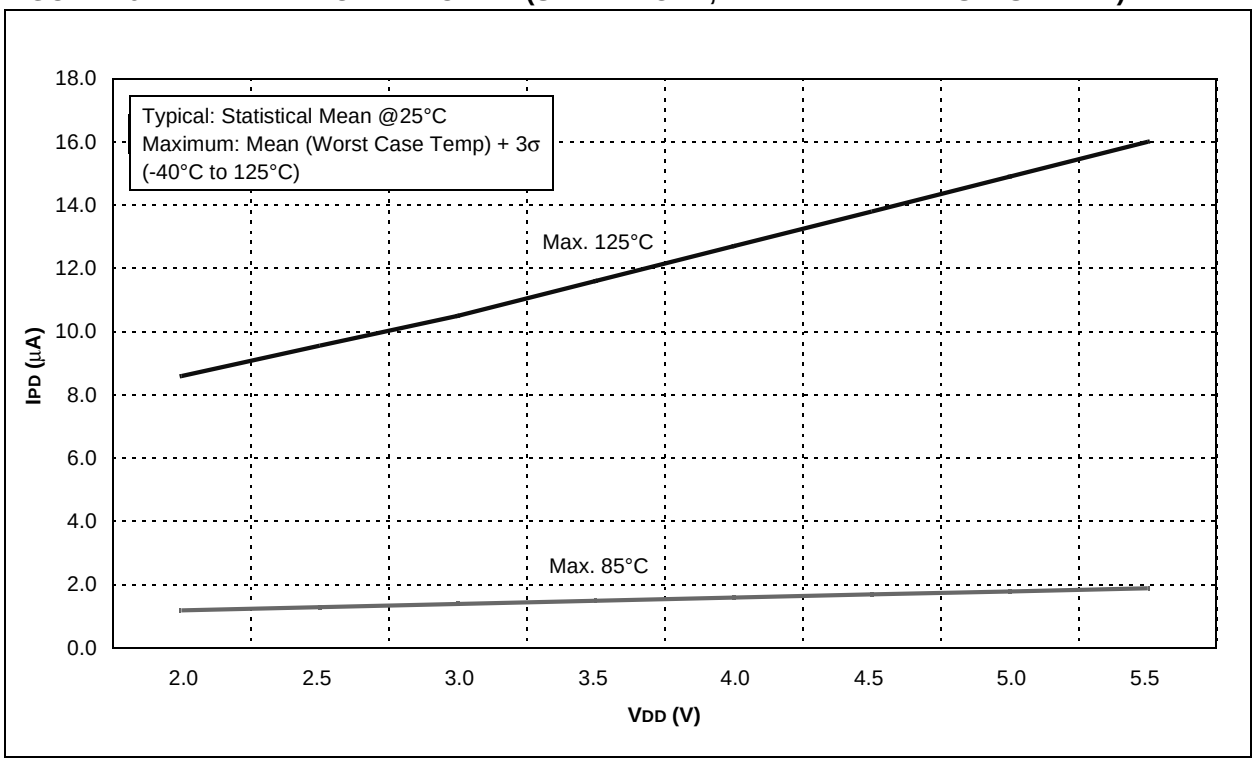

FIGURE 16-15: COMPARATOR IPD VS. VDD (BOTH COMPARATORS ENABLED)

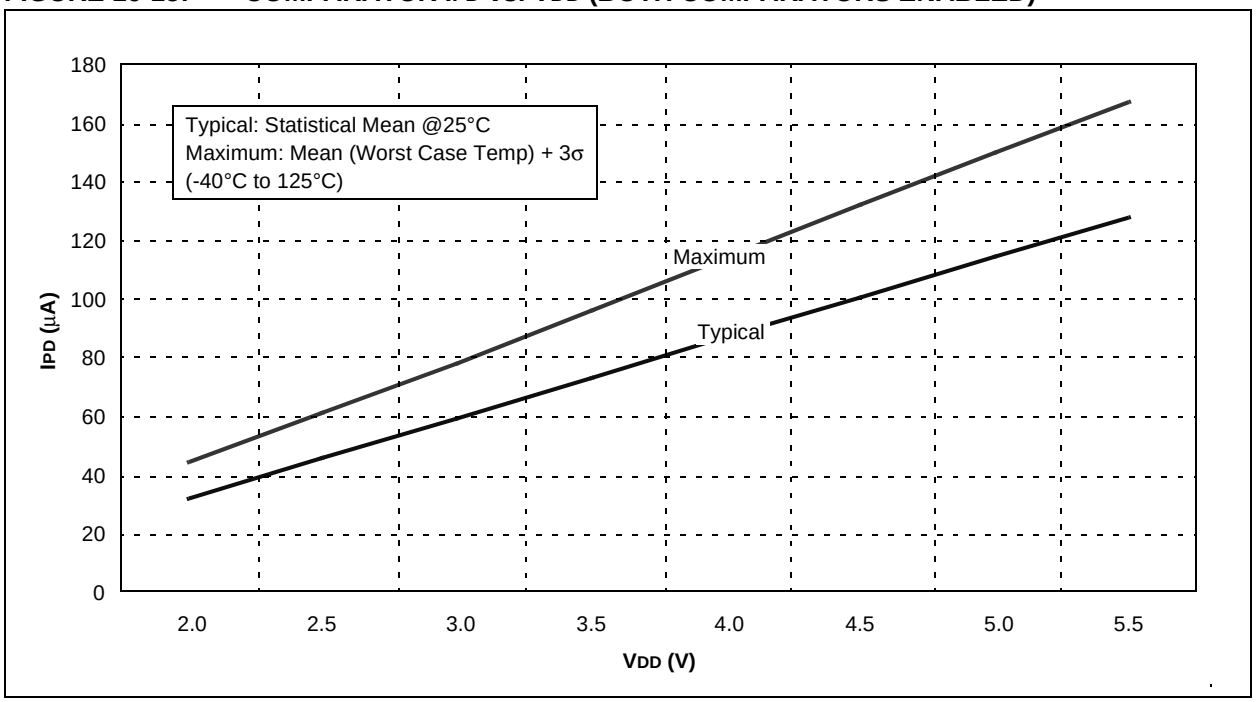

© 2007 Microchip Technology Inc.

FIGURE 16-16: BOR IPD VS. VDD OVER TEMPERATURE

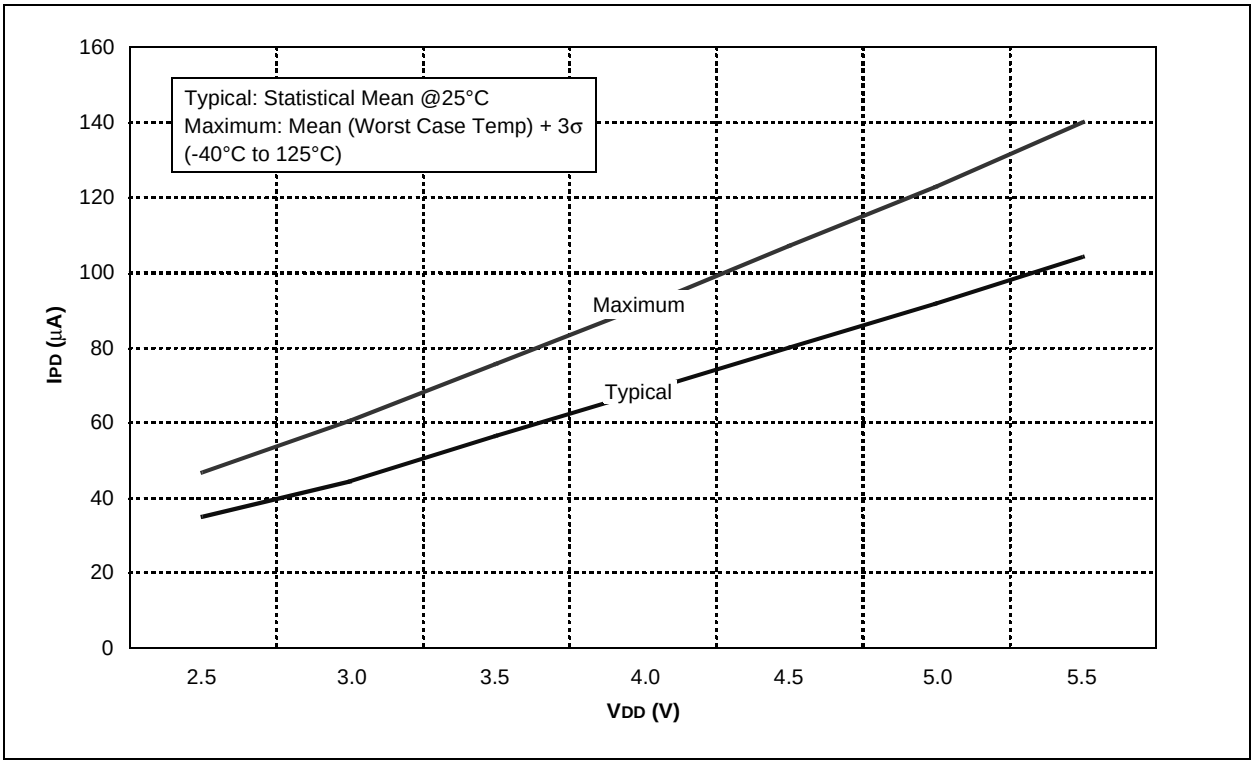

FIGURE 16-17: TYPICAL WDT IPD VS. VDD OVER TEMPERATURE

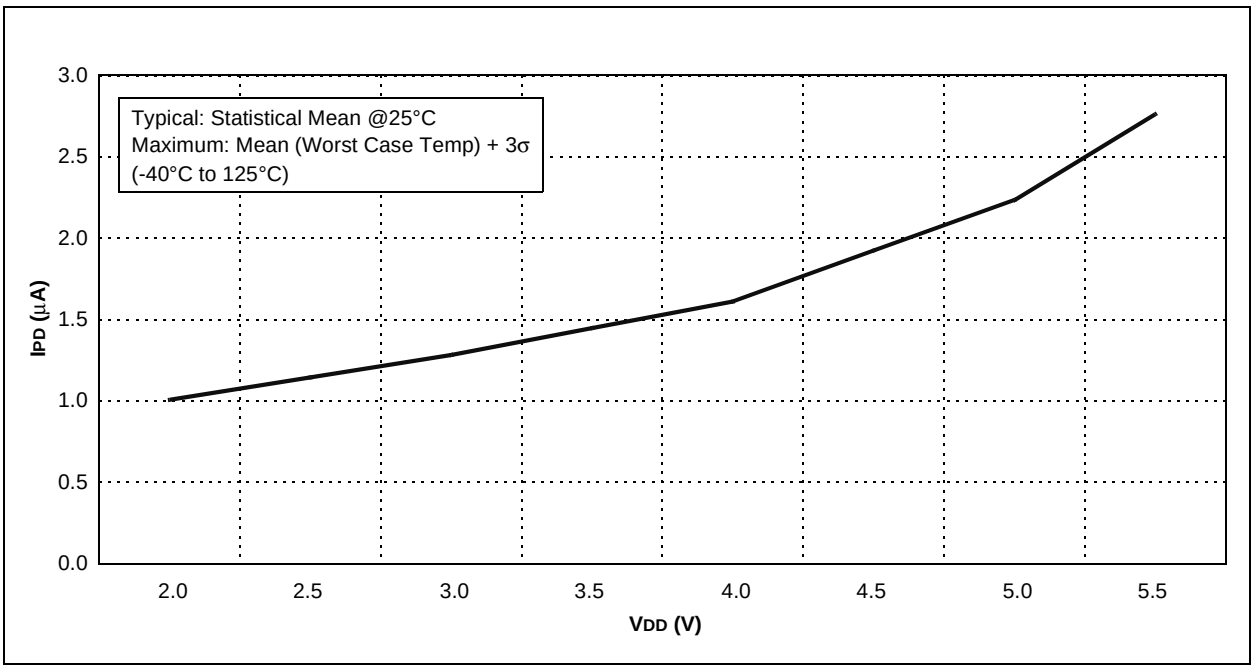

FIGURE 16-18: MAXIMUM WDT IPD vs. VDD OVER TEMPERATURE

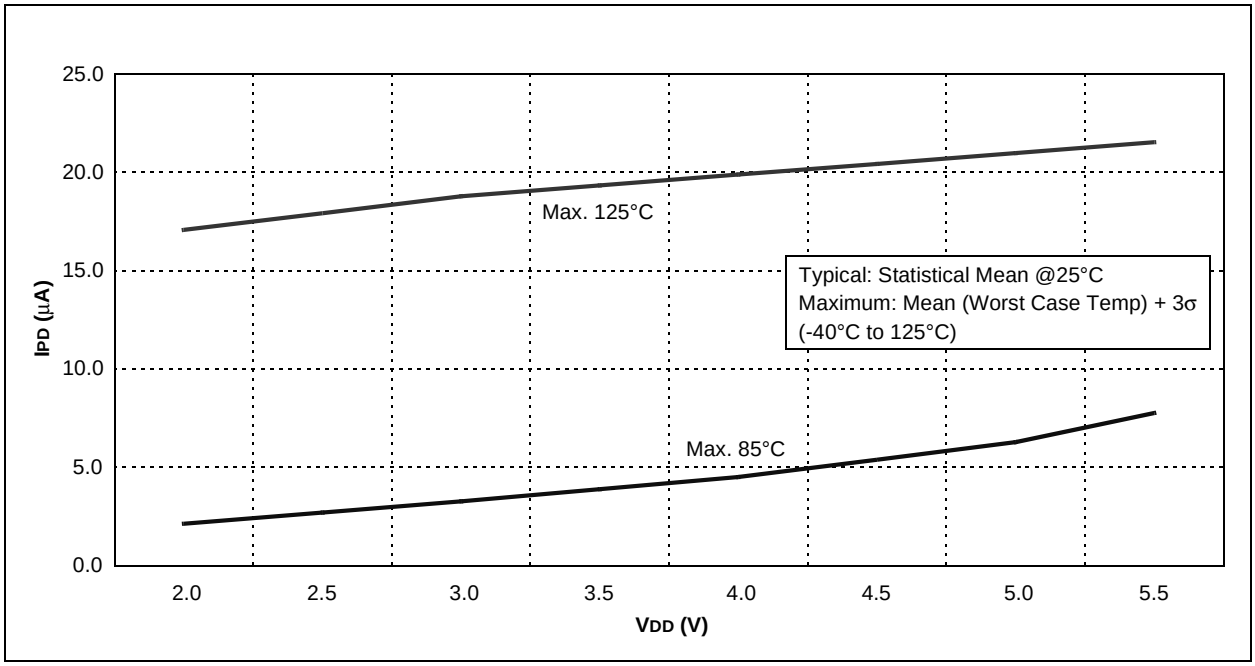

FIGURE 16-19: WDT PERIOD vs. VDD OVER TEMPERATURE

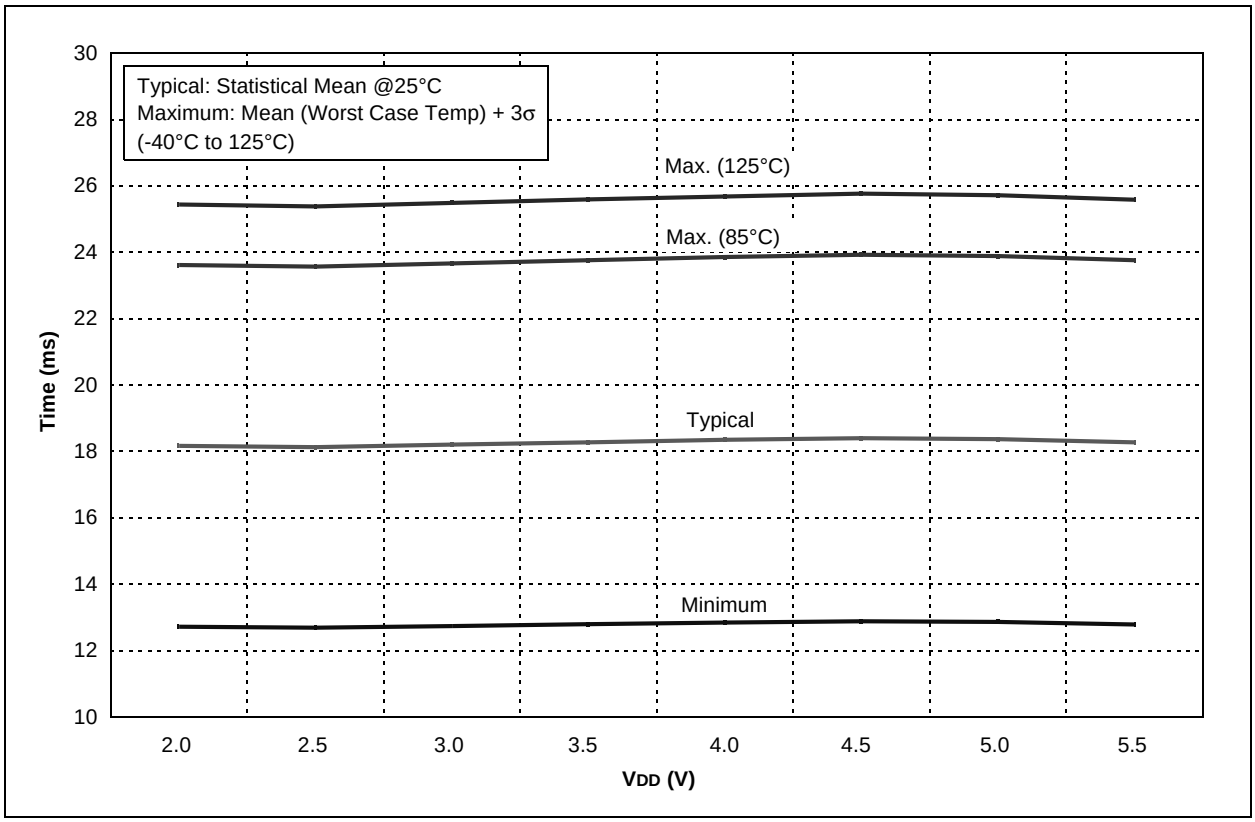

© 2007 Microchip Technology Inc.

FIGURE 16-20: WDT PERIOD vs. TEMPERATURE OVER VDD (5.0V)

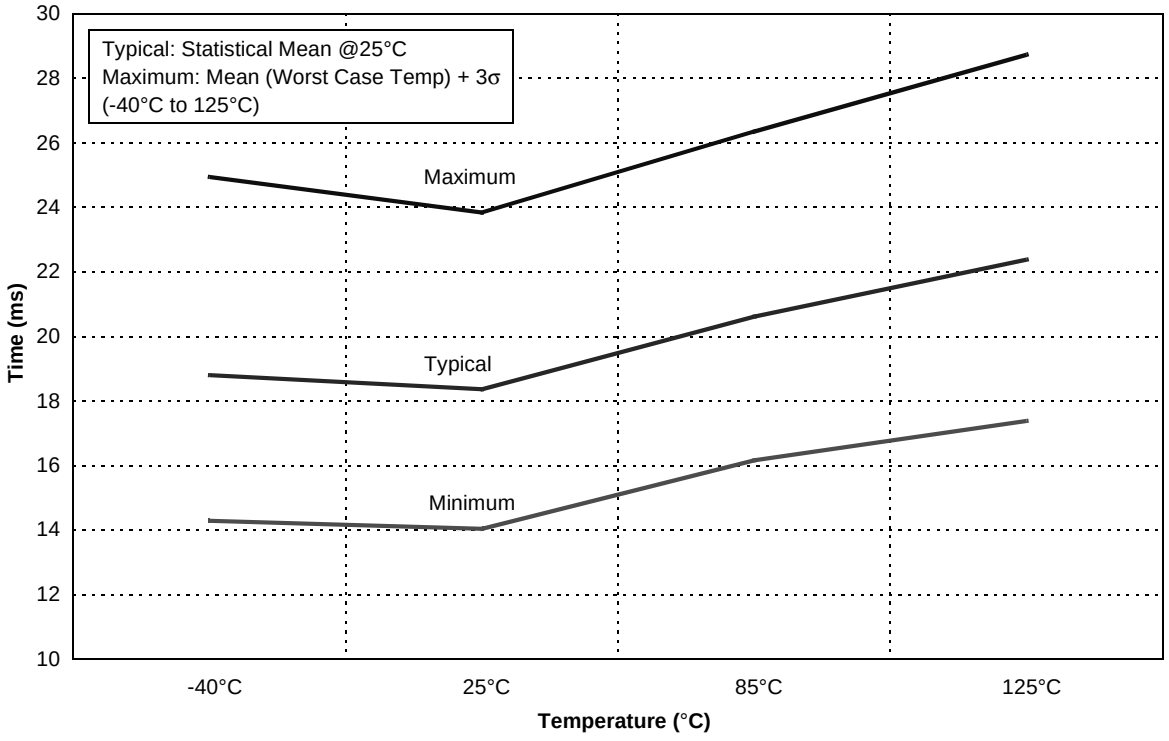

FIGURE 16-21: CVREF IPD vs. VDD OVER TEMPERATURE (HIGH RANGE)

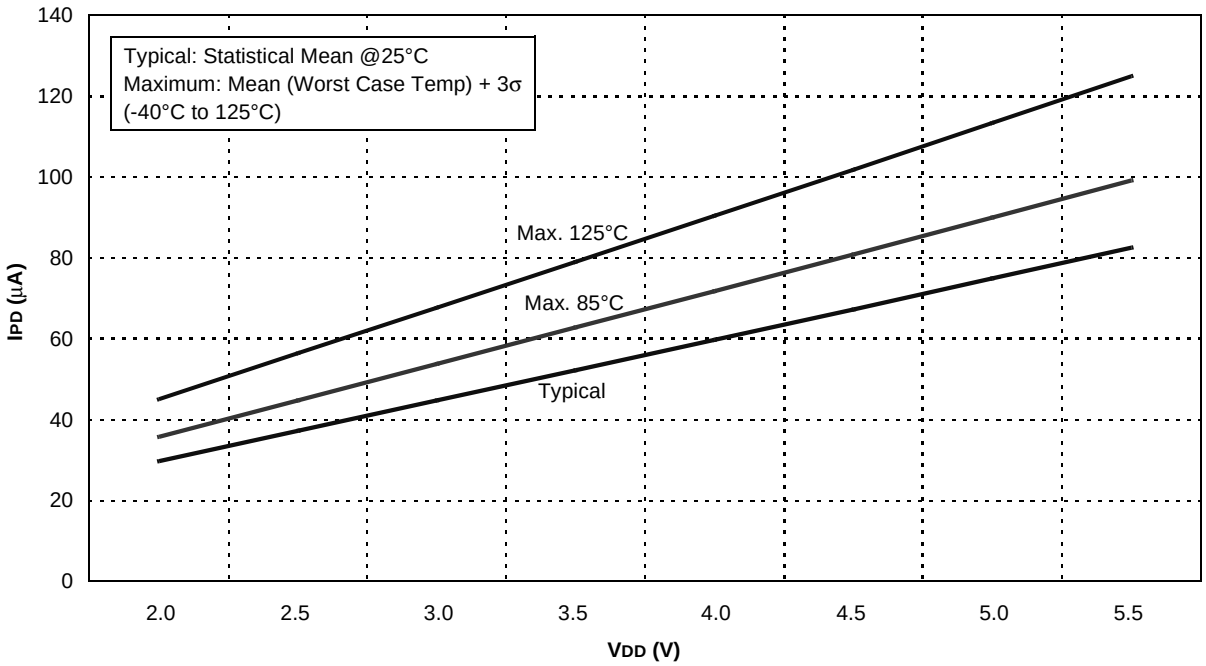

FIGURE 16-22: CVREF IPD VS. VDD OVER TEMPERATURE (LOW RANGE)

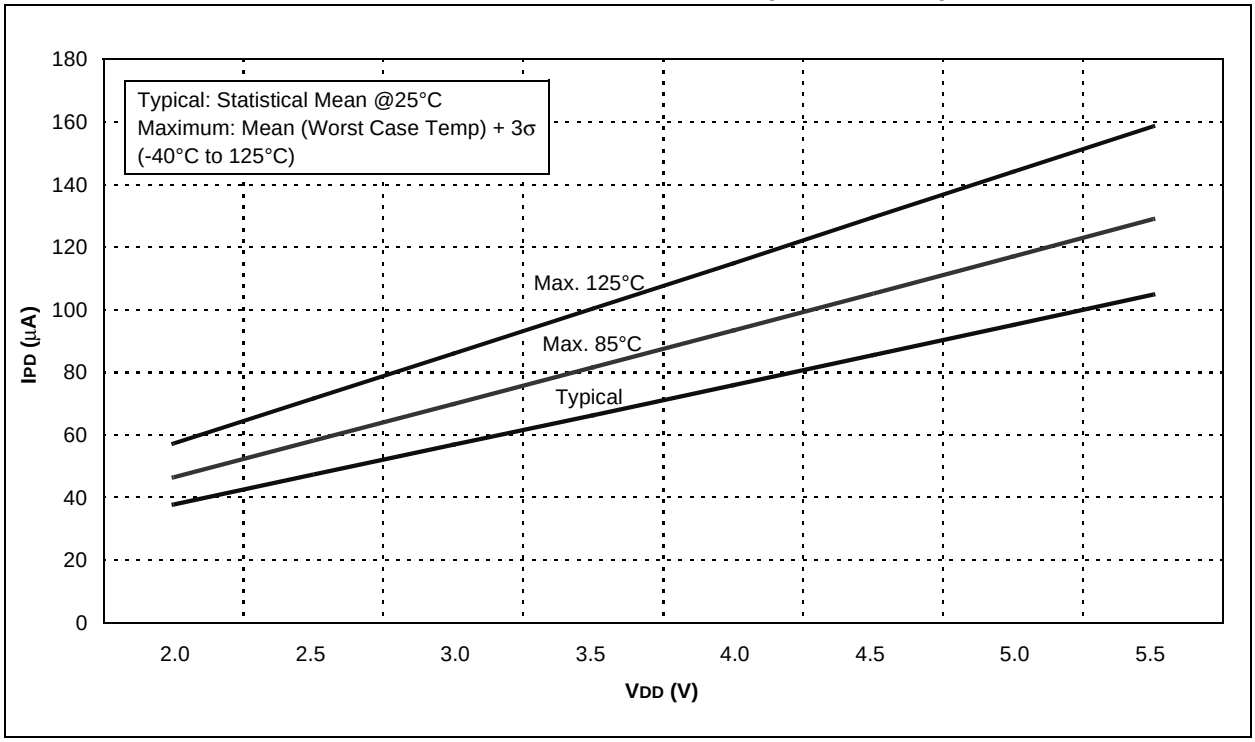

FIGURE 16-23: VOL VS. IOL OVER TEMPERATURE (VDD = 3.0V)

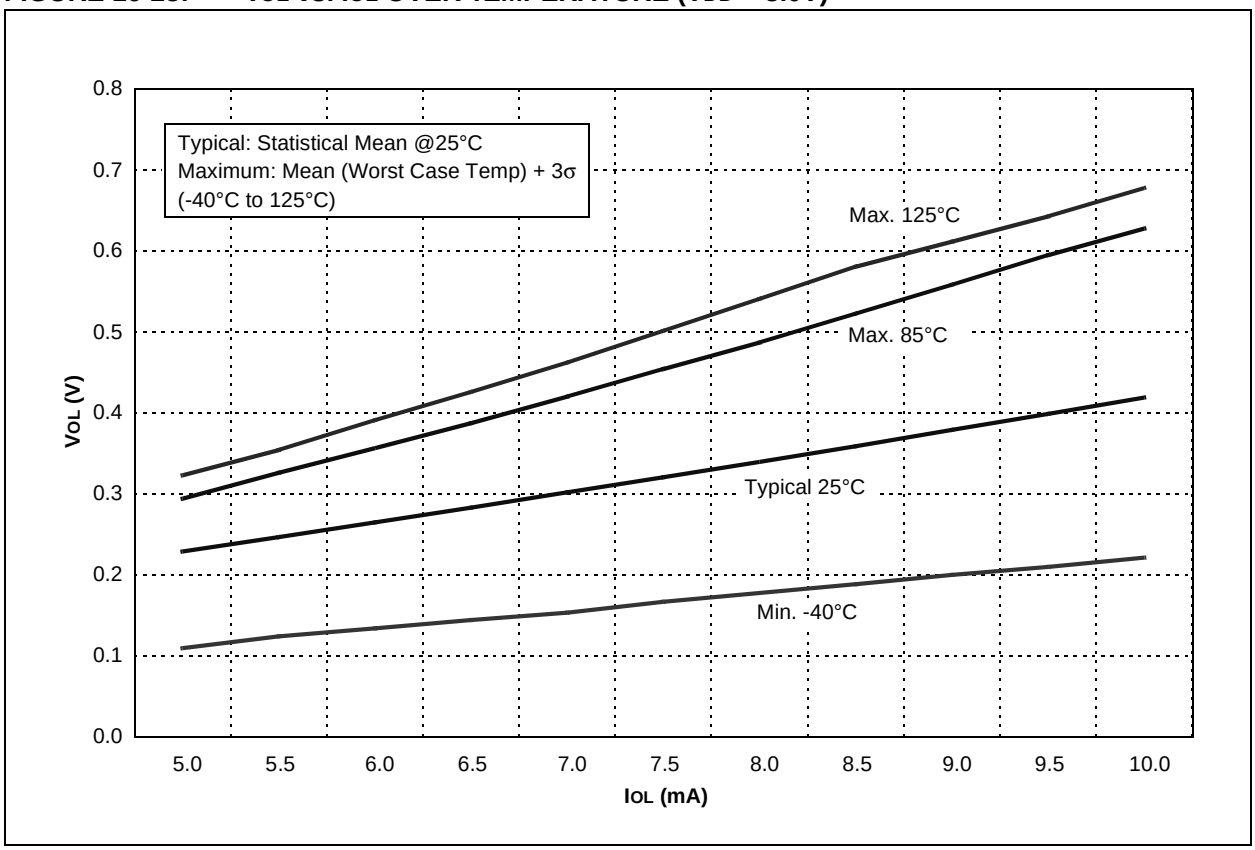

© 2007 Microchip Technology Inc.

FIGURE 16-24: VOL vs. IOL OVER TEMPERATURE (VDD = 5.0V)

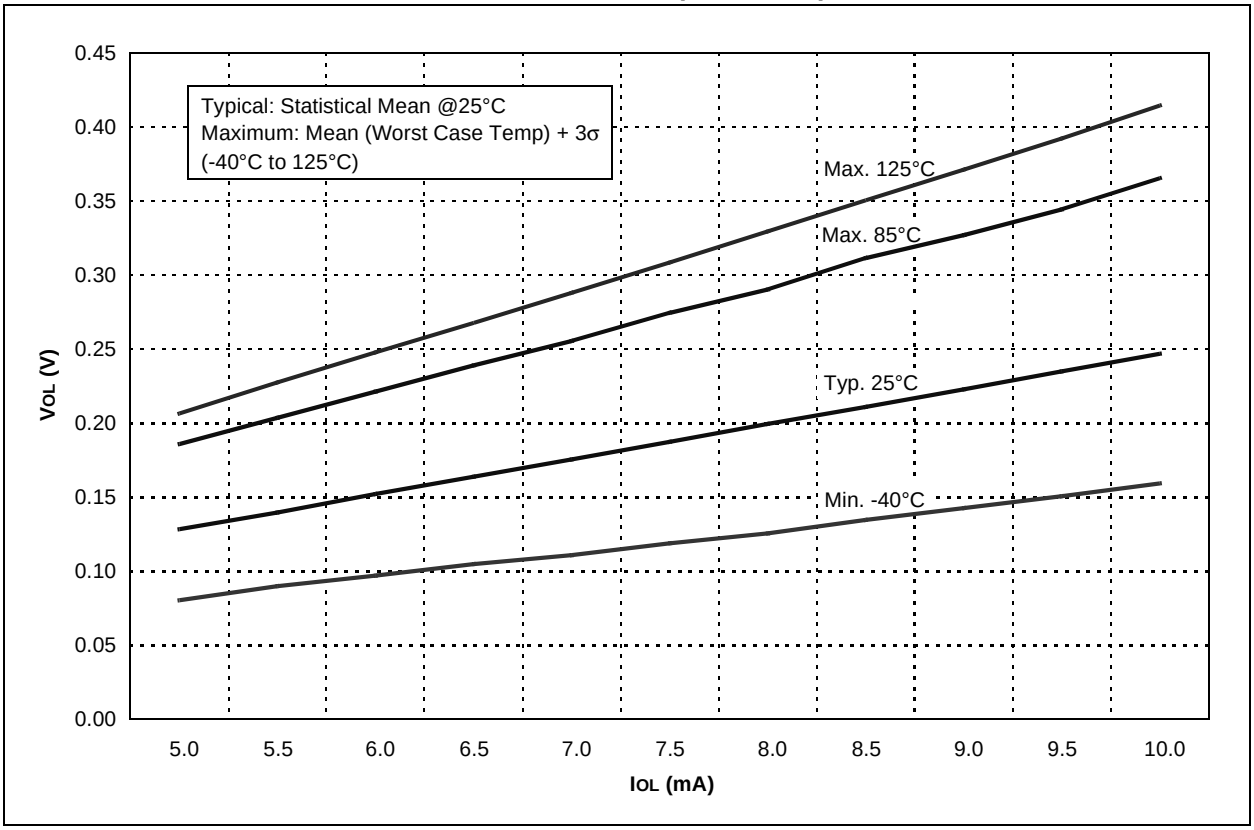

FIGURE 16-25: VOH vs. IOH OVER TEMPERATURE (VDD = 3.0V)

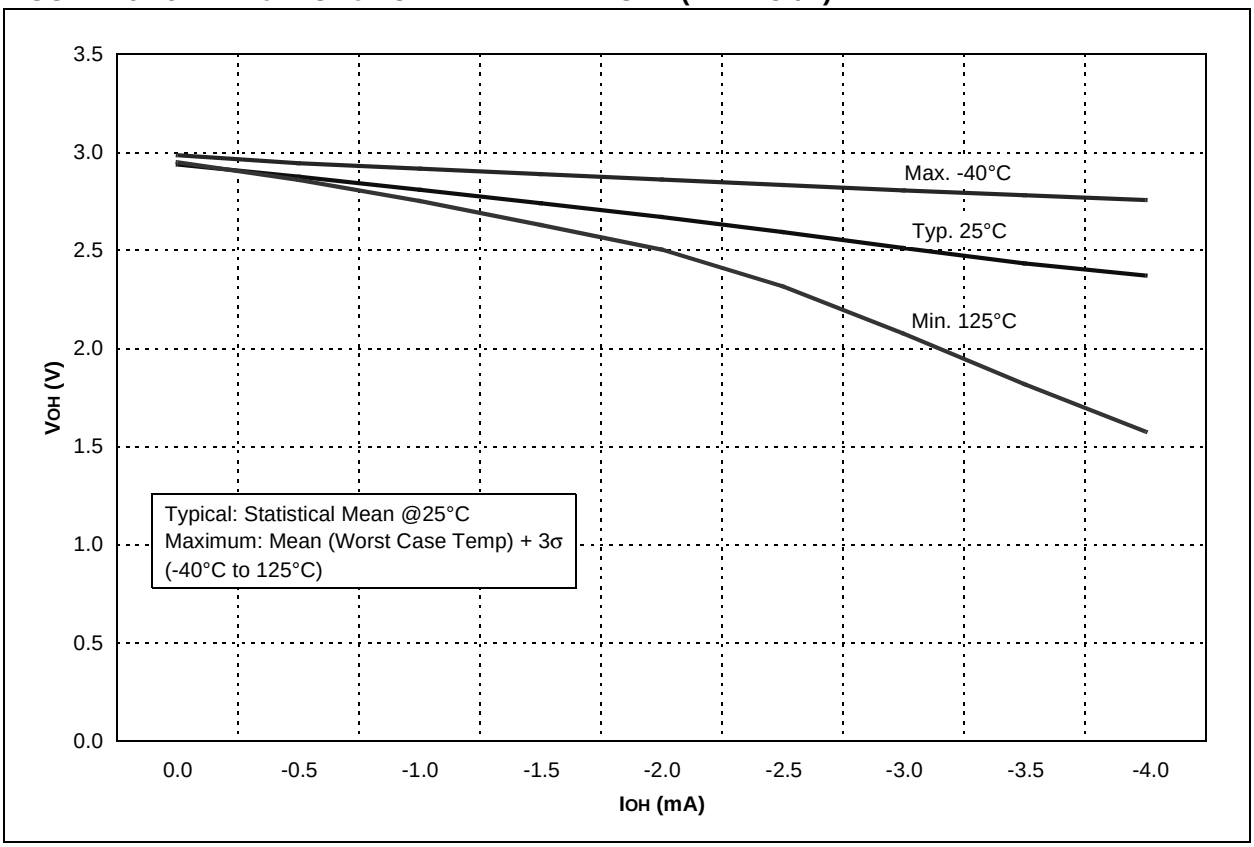

FIGURE 16-26: V_{OH} vs. I_{OH} OVER TEMPERATURE (V_{DD} = 5.0V)

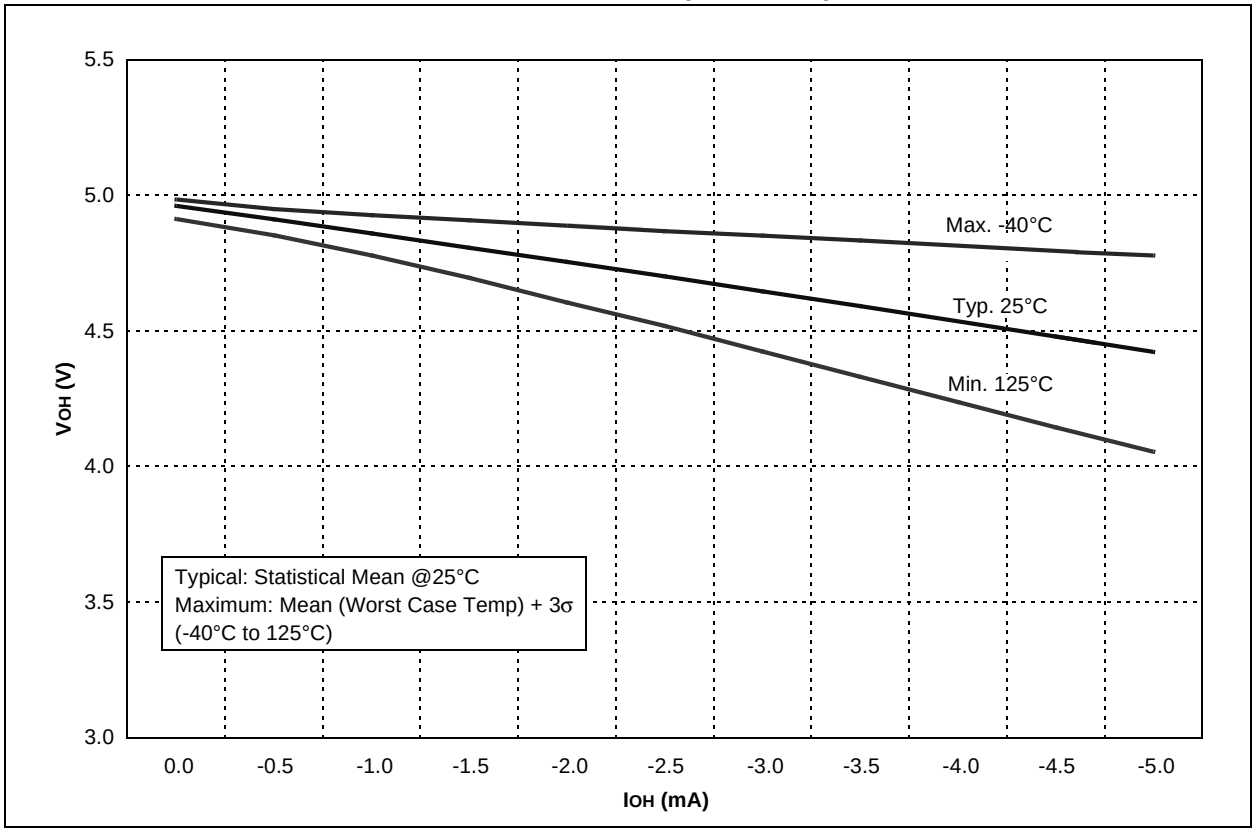

FIGURE 16-27: TTL INPUT THRESHOLD V_{IN} vs. V_{DD} OVER TEMPERATURE

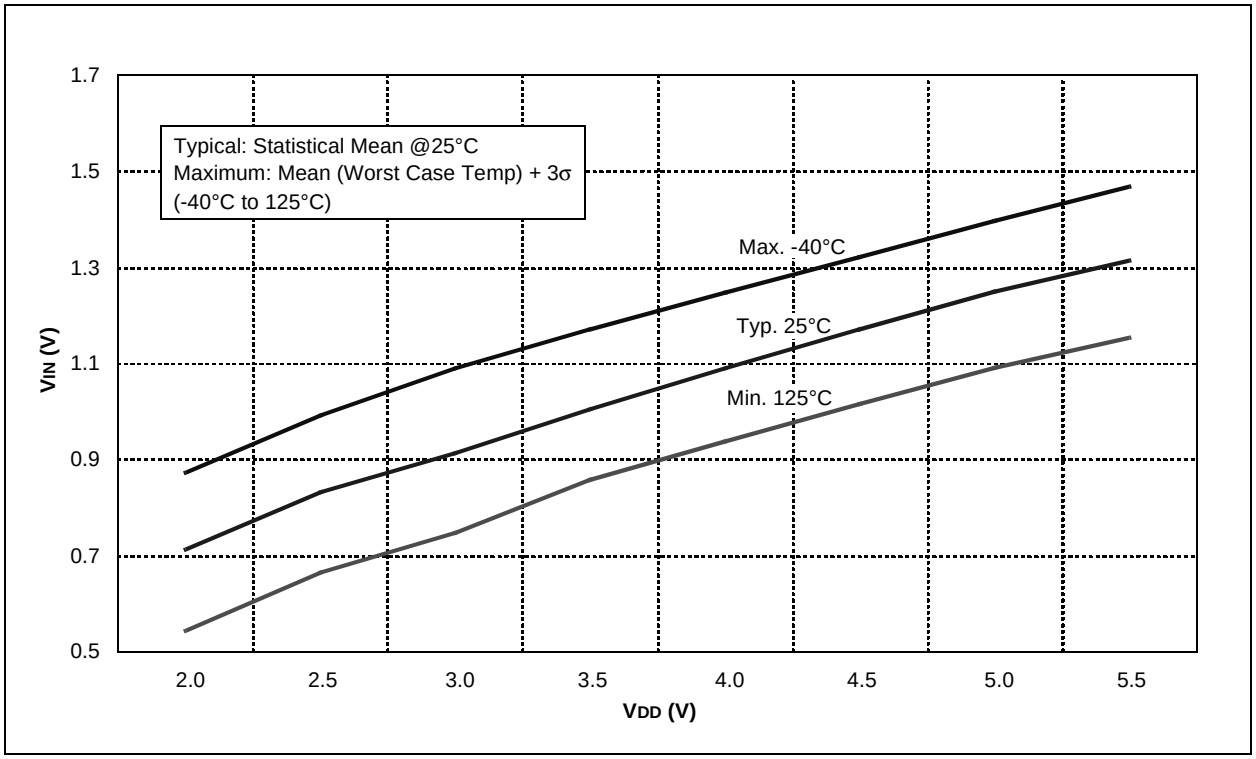

© 2007 Microchip Technology Inc.

FIGURE 16-28: SCHMITT TRIGGER INPUT THRESHOLD VIN vs. VDD OVER TEMPERATURE

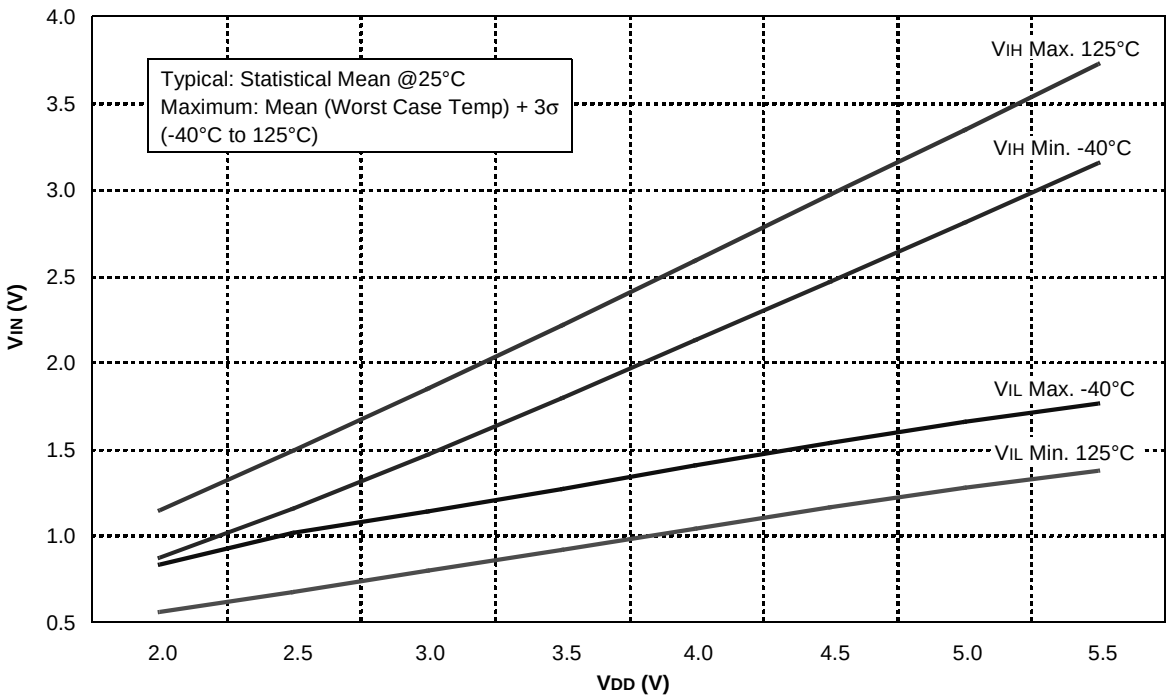

FIGURE 16-29: T1OSC IPD vs. VDD OVER TEMPERATURE (32 kHz)

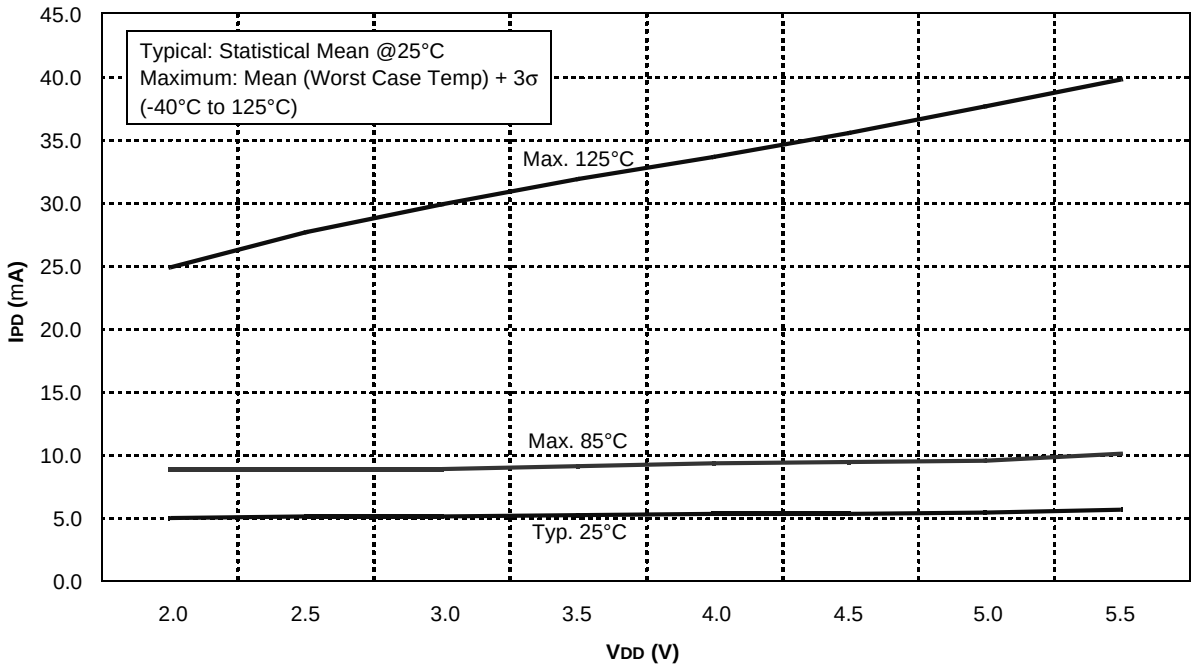

FIGURE 16-30: COMPARATOR RESPONSE TIME (RISING EDGE)

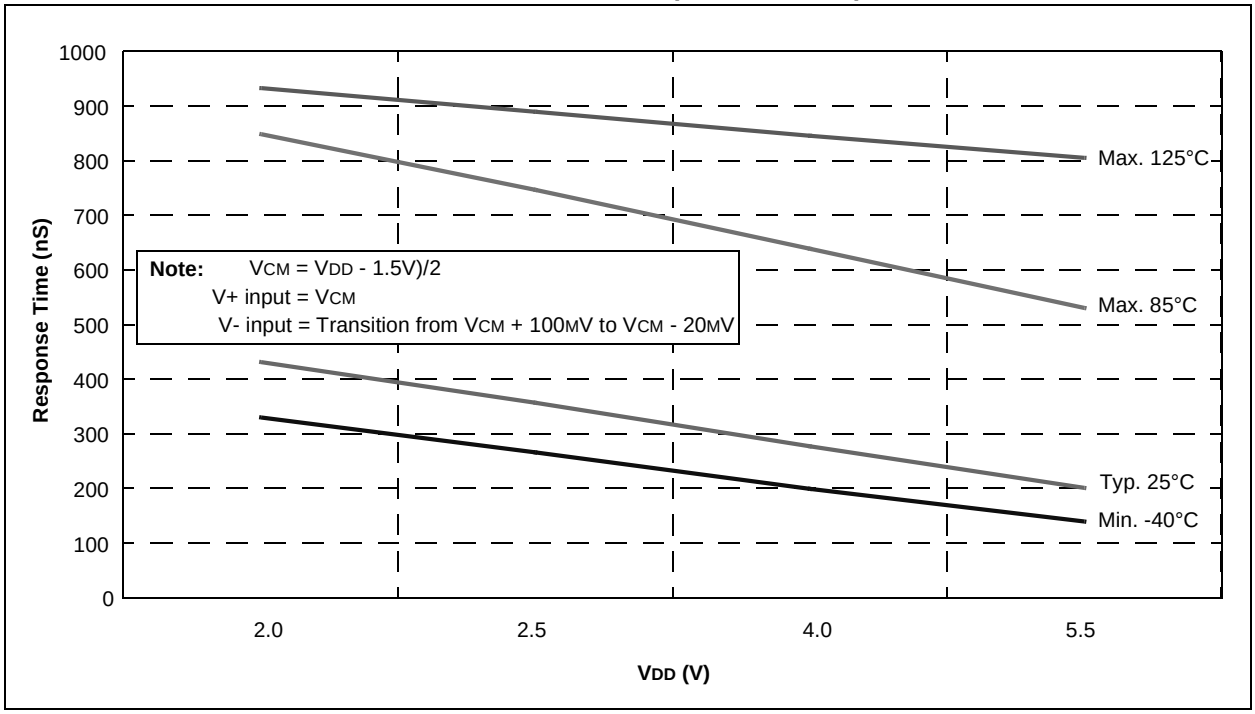

FIGURE 16-31: COMPARATOR RESPONSE TIME (FALLING EDGE)

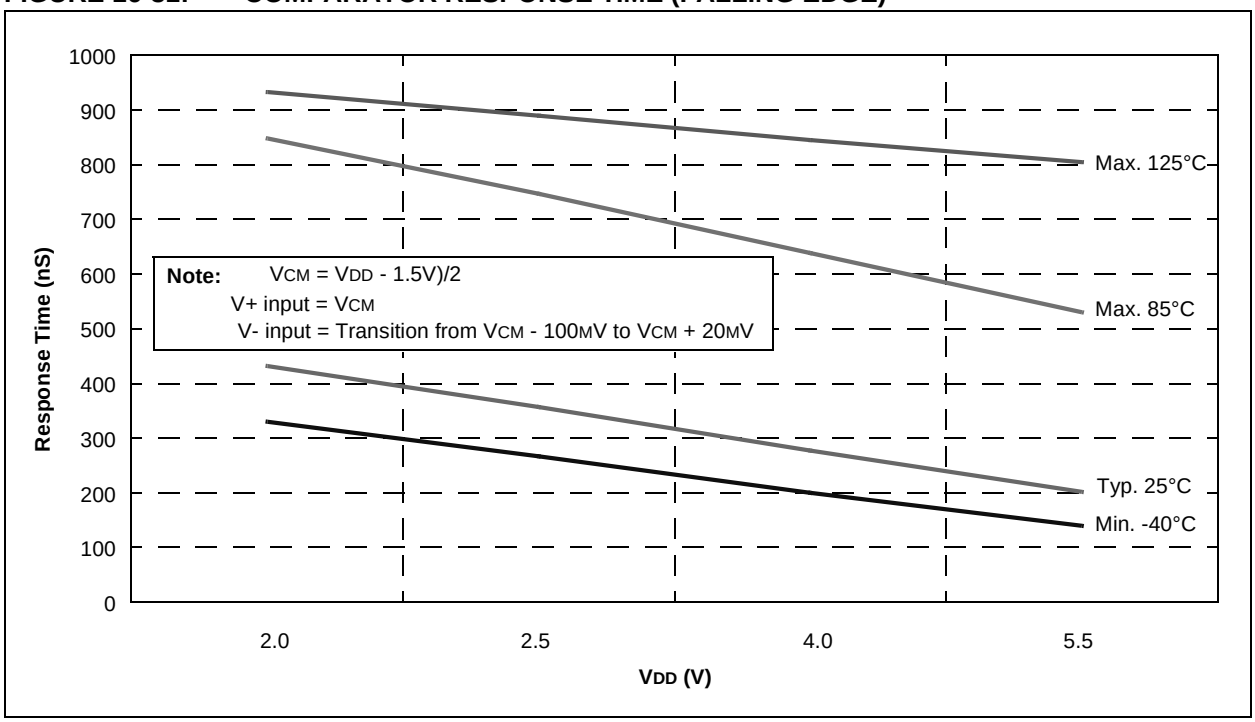

© 2007 Microchip Technology Inc.

FIGURE 16-32: LFINTOSC FREQUENCY vs. VDD OVER TEMPERATURE (31 kHz)

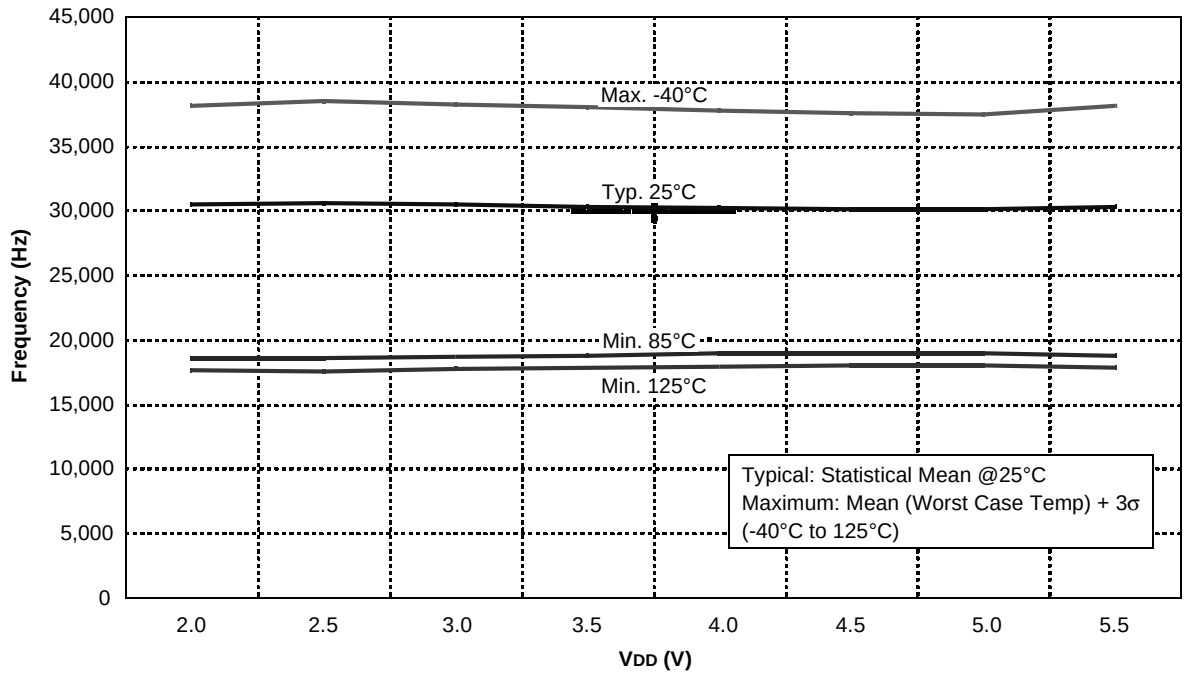

FIGURE 16-33: TYPICAL HFINTOSC START-UP TIMES vs. VDD OVER TEMPERATURE

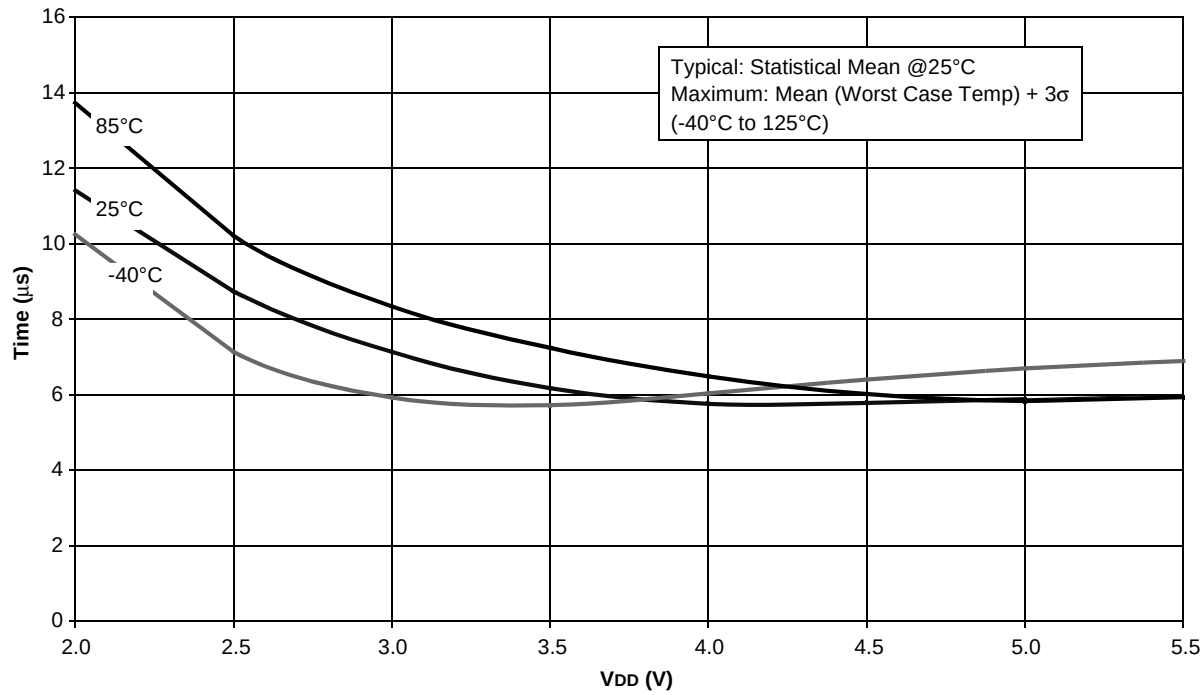

FIGURE 16-34: MAXIMUM HFINTOSC START-UP TIMES vs. VDD OVER TEMPERATURE

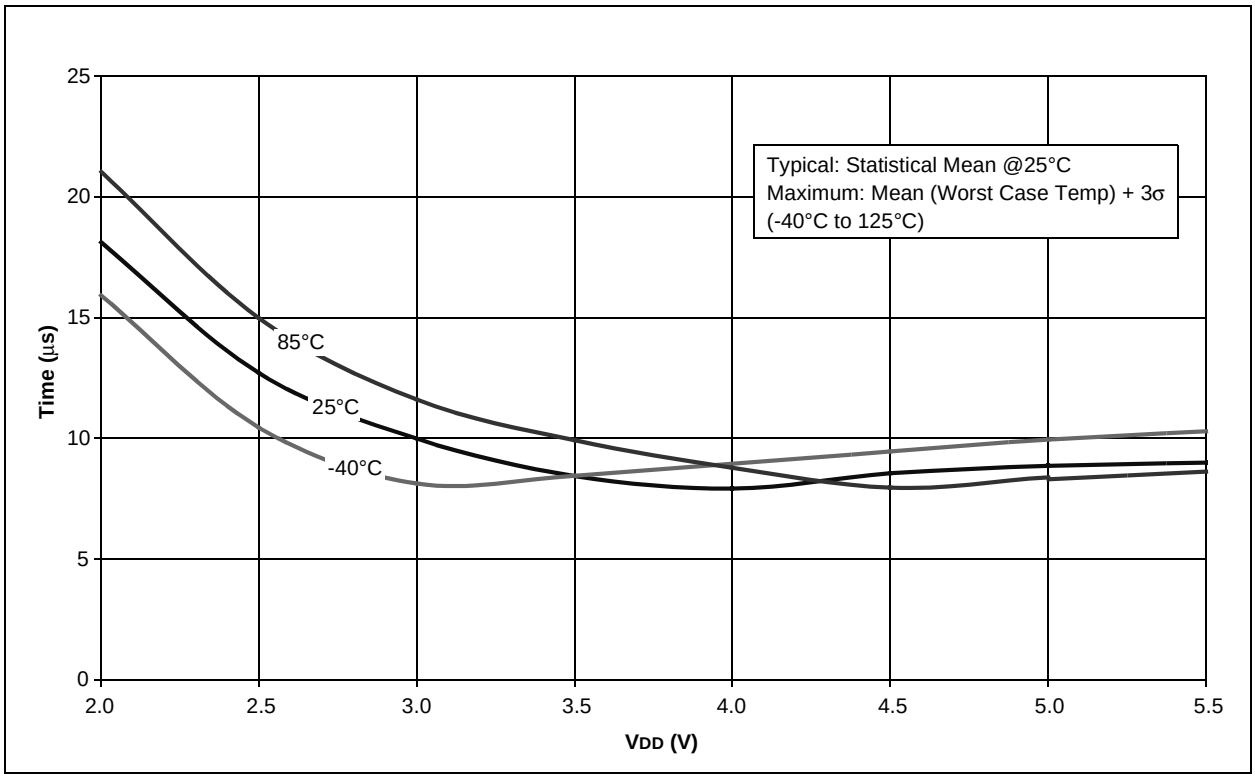

FIGURE 16-35: MINIMUM HFINTOSC START-UP TIMES vs. VDD OVER TEMPERATURE

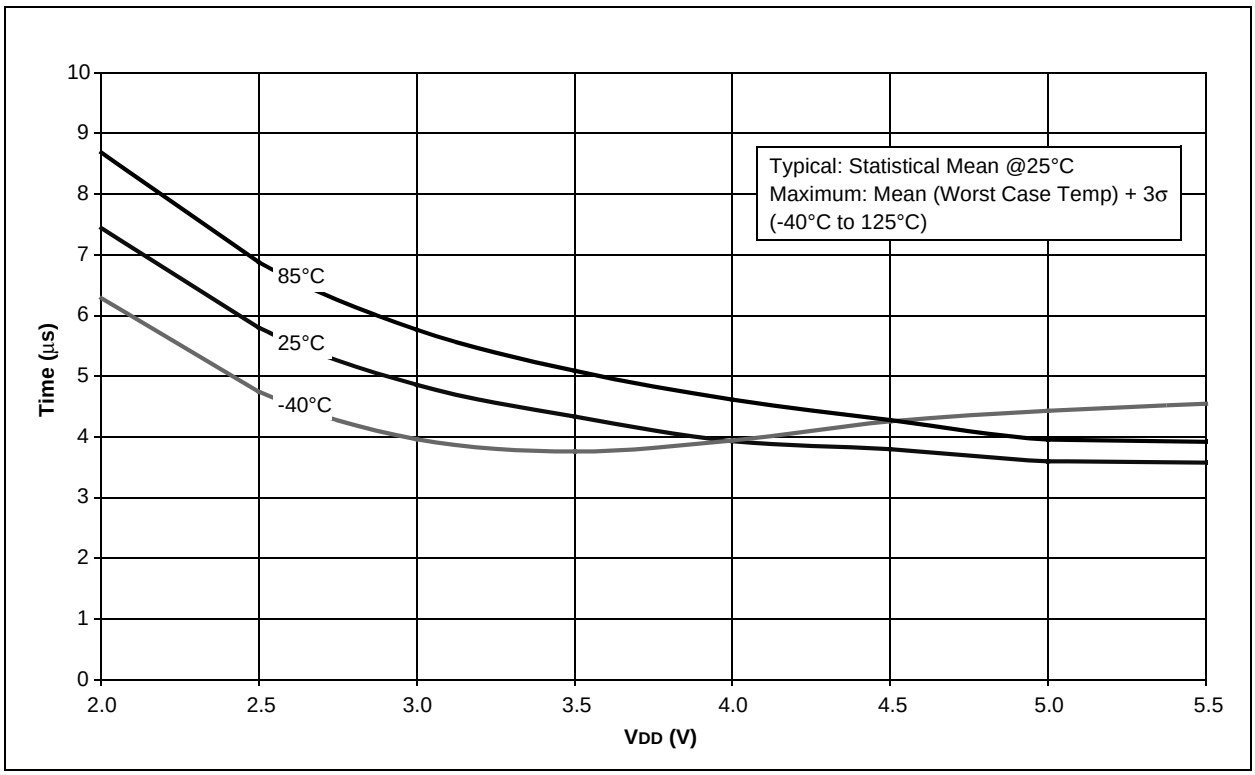

© 2007 Microchip Technology Inc.

FIGURE 16-36: TYPICAL HFINTOSC FREQUENCY CHANGE vs. VDD (25°C)

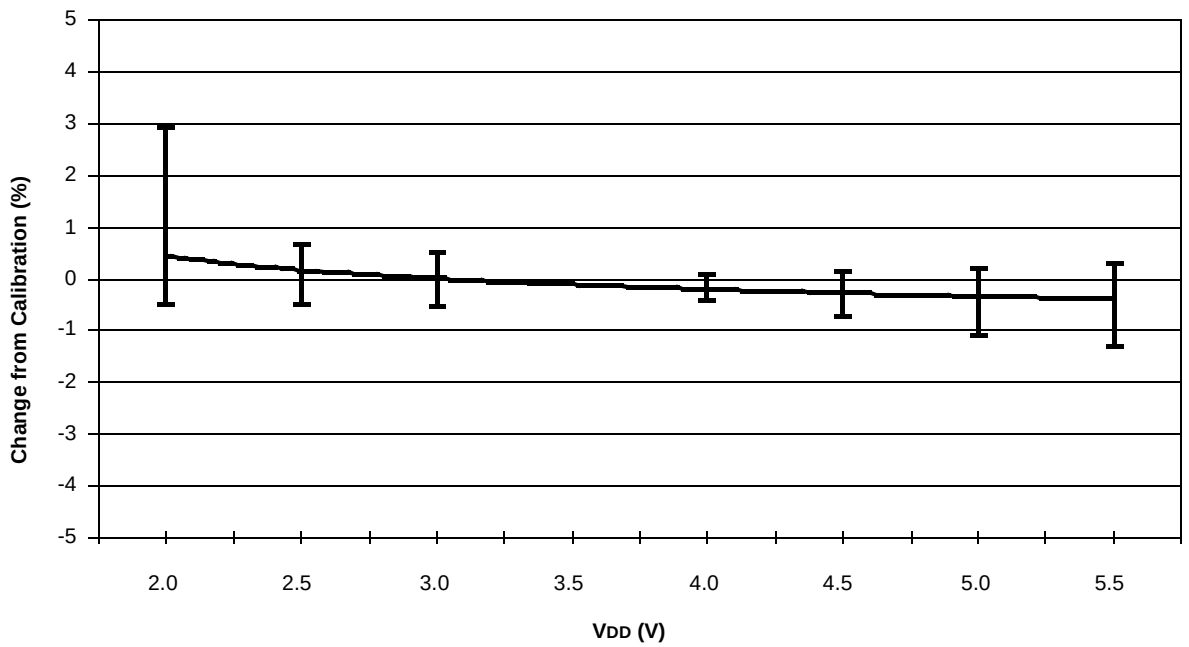

FIGURE 16-37: TYPICAL HFINTOSC FREQUENCY CHANGE OVER DEVICE VDD (85°C)

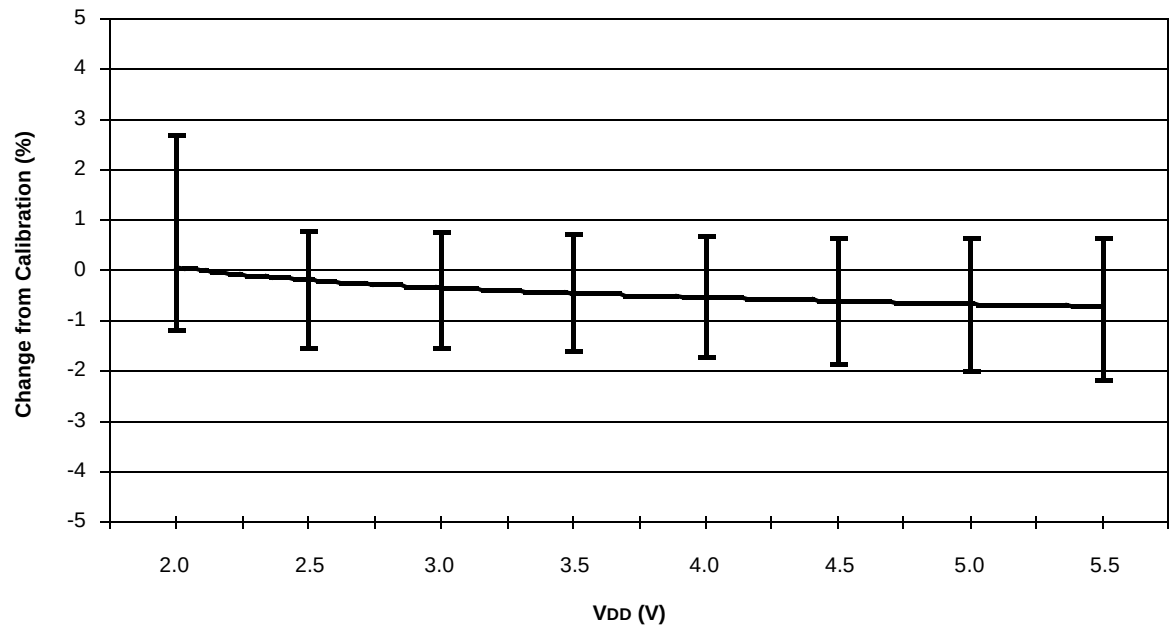

FIGURE 16-38: TYPICAL HFINTOSC FREQUENCY CHANGE vs. VDD (125°C)

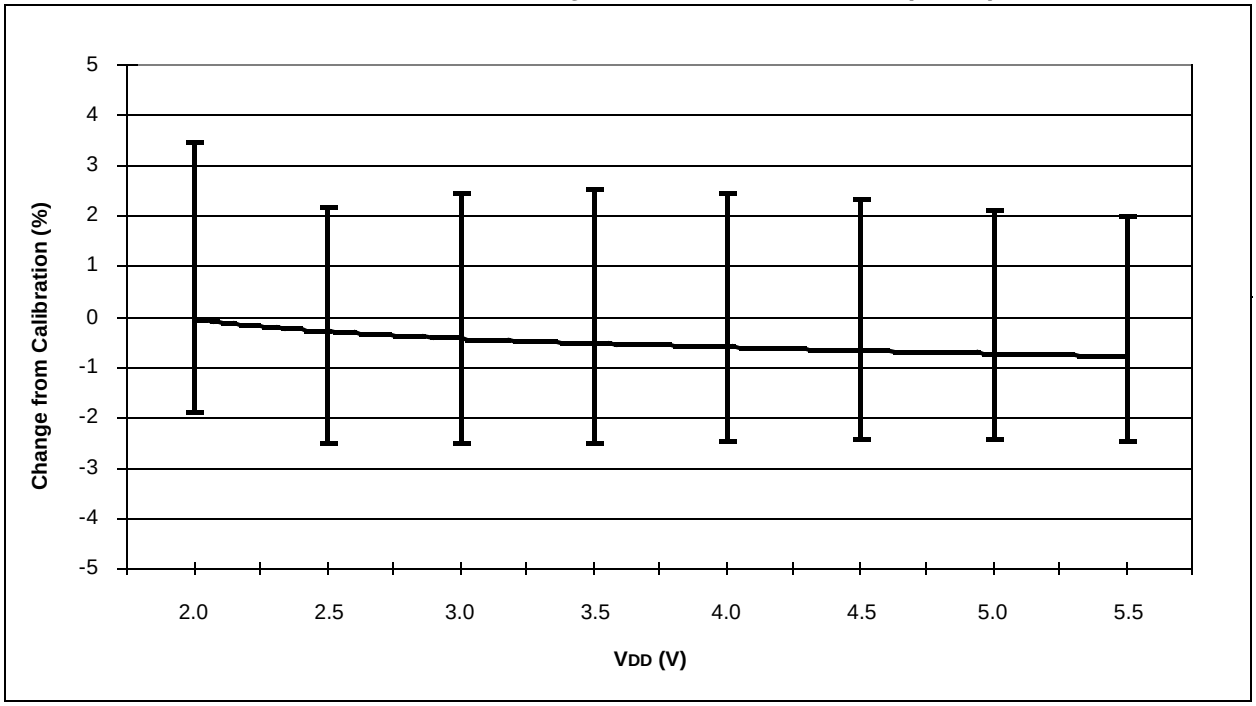

FIGURE 16-39: TYPICAL HFINTOSC FREQUENCY CHANGE vs. VDD (-40°C)

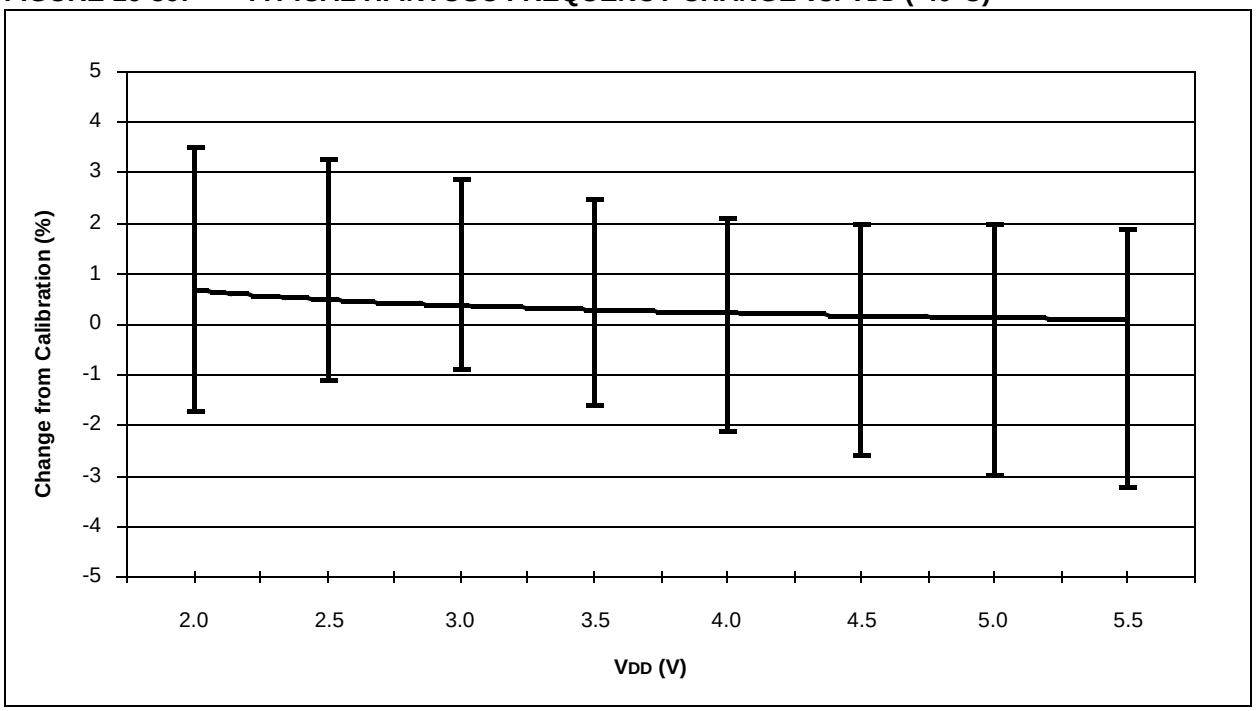

© 2007 Microchip Technology Inc.

17.0 PACKAGING INFORMATION

17.1 Package Marking Information

8-Lead PDIP

Example

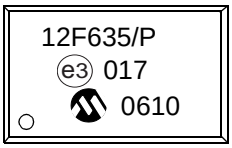

8-Lead SOIC

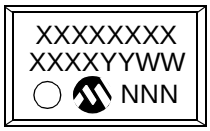

Example

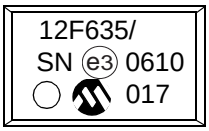

8-Lead DFN (4x4x0.9 mm)

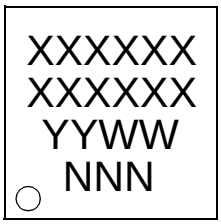

Example

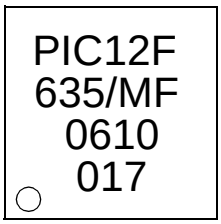

8-Lead DFN-S (6x5 mm)

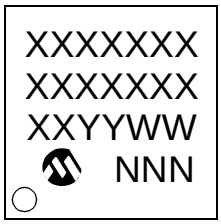

Example

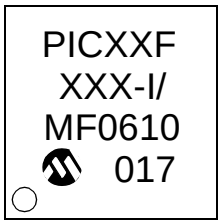

Legend:	XX...X	Customer-specific information
	Y	Year code (last digit of calendar year)
	YY	Year code (last 2 digits of calendar year)
	WW	Week code (week of January 1 is week ‘01’)
	NNN	Alphanumeric traceability code
	e3	Pb-free JEDEC designator for Matte Tin (Sn)
	*	This package is Pb-free. The Pb-free JEDEC designator (e3) can be found on the outer packaging for this package.

Note: In the event the full Microchip part number cannot be marked on one line, it will be carried over to the next line, thus limiting the number of available characters for customer-specific information.

* Standard PIC device marking consists of Microchip part number, year code, week code and traceability code. For PIC device marking beyond this, certain price adders apply. Please check with your Microchip Sales Office. For QTP devices, any special marking adders are included in QTP price.

17.1 Package Marking Information (Continued)

14-Lead PDIP

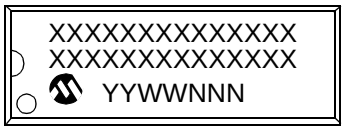

Example

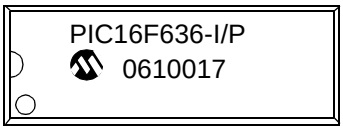

14-Lead SOIC

Example

14-Lead TSSOP

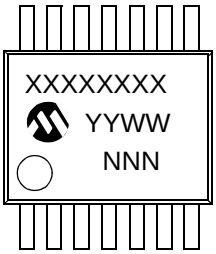

Example

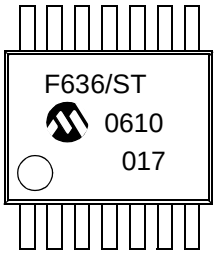

16-Lead QFN

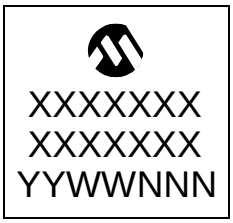

Example

20-Lead SSOP

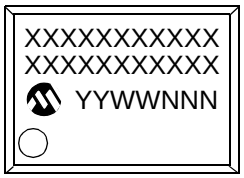

Example

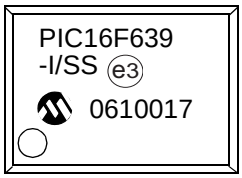

© 2007 Microchip Technology Inc.

17.2 Package Details

The following sections give the technical details of the packages.

8-Lead Plastic Dual In-Line (P or PA) – 300 mil Body [PDIP]

Note: For the most current package drawings, please see the Microchip Packaging Specification located at http://www.microchip.com/packaging

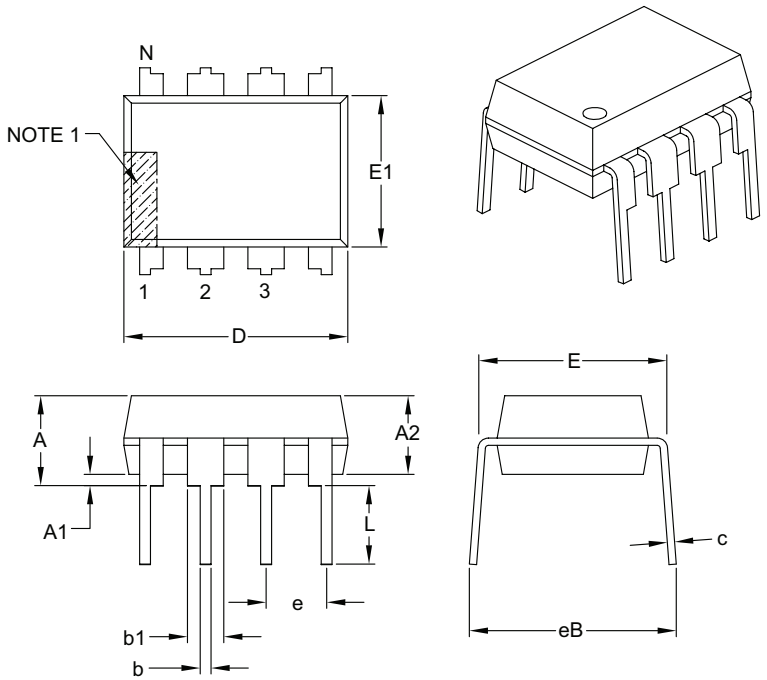

Units		INCHES		
Dimension Limits		MIN	NOM	MAX
Number of Pins	N	8		
Pitch	e	.100 BSC		
Top to Seating Plane	A	–	–	.210
Molded Package Thickness	A2	.115	.130	.195
Base to Seating Plane	A1	.015	–	–
Shoulder to Shoulder Width	E	.290	.310	.325
Molded Package Width	E1	.240	.250	.280
Overall Length	D	.348	.365	.400
Tip to Seating Plane	L	.115	.130	.150
Lead Thickness	c	.008	.010	.015
Upper Lead Width	b1	.040	.060	.070
Lower Lead Width	b	.014	.018	.022
Overall Row Spacing §	eB	–	–	.430

Notes:

1. Pin 1 visual index feature may vary, but must be located with the hatched area.
2. § Significant Characteristic.
3. Dimensions D and E1 do not include mold flash or protrusions. Mold flash or protrusions shall not exceed .010" per side.
4. Dimensioning and tolerancing per ASME Y14.5M.
   BSC: Basic Dimension. Theoretically exact value shown without tolerances.

Microchip Technology Drawing C04-018B

8-Lead Plastic Small Outline (SN or OA) – Narrow, 3.90 mm Body [SOIC]

Note: For the most current package drawings, please see the Microchip Packaging Specification located at http://www.microchip.com/packaging

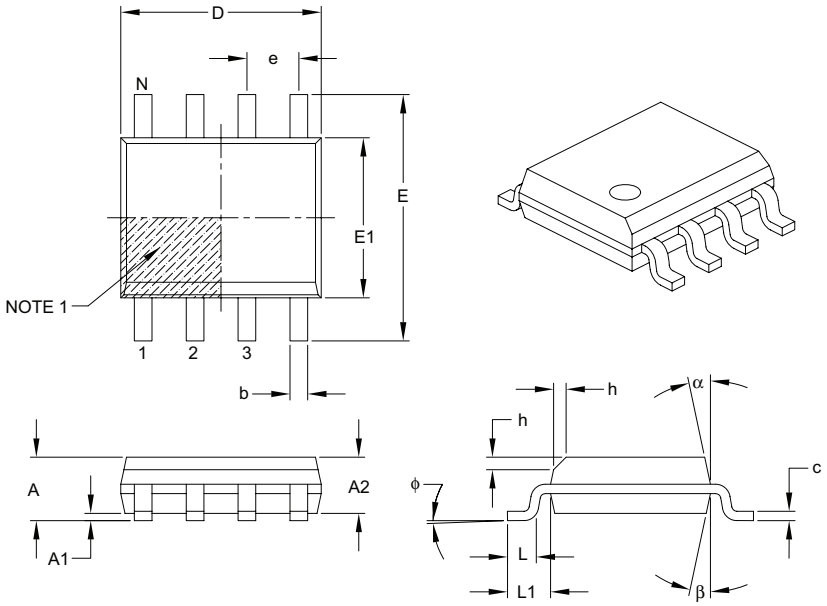

Units		MILLIMETERS		
Dimension Limits		MIN	NOM	MAX
Number of Pins	N	8		
Pitch	e	1.27 BSC		
Overall Height	A	–	–	1.75
Molded Package Thickness	A2	1.25	–	–
Standoff §	A1	0.10	–	0.25
Overall Width	E	6.00 BSC		
Molded Package Width	E1	3.90 BSC		
Overall Length	D	4.90 BSC		
Chamfer (optional)	h	0.25	–	0.50
Foot Length	L	0.40	–	1.27
Footprint	L1	1.04 REF		
Foot Angle	φ	0°	–	8°
Lead Thickness	c	0.17	–	0.25
Lead Width	b	0.31	–	0.51
Mold Draft Angle Top	α	5°	–	15°
Mold Draft Angle Bottom	β	5°	–	15°

Notes:

1. Pin 1 visual index feature may vary, but must be located within the hatched area.
2. § Significant Characteristic.
3. Dimensions D and E1 do not include mold flash or protrusions. Mold flash or protrusions shall not exceed 0.15 mm per side.
4. Dimensioning and tolerancing per ASME Y14.5M.

   BSC: Basic Dimension. Theoretically exact value shown without tolerances.

   REF: Reference Dimension, usually without tolerance, for information purposes only.

Microchip Technology Drawing C04-057B

© 2007 Microchip Technology Inc.

8-Lead Plastic Dual Flat, No Lead Package (MD) – 4x4x0.9 mm Body [DFN]

Note: For the most current package drawings, please see the Microchip Packaging Specification located at http://www.microchip.com/packaging

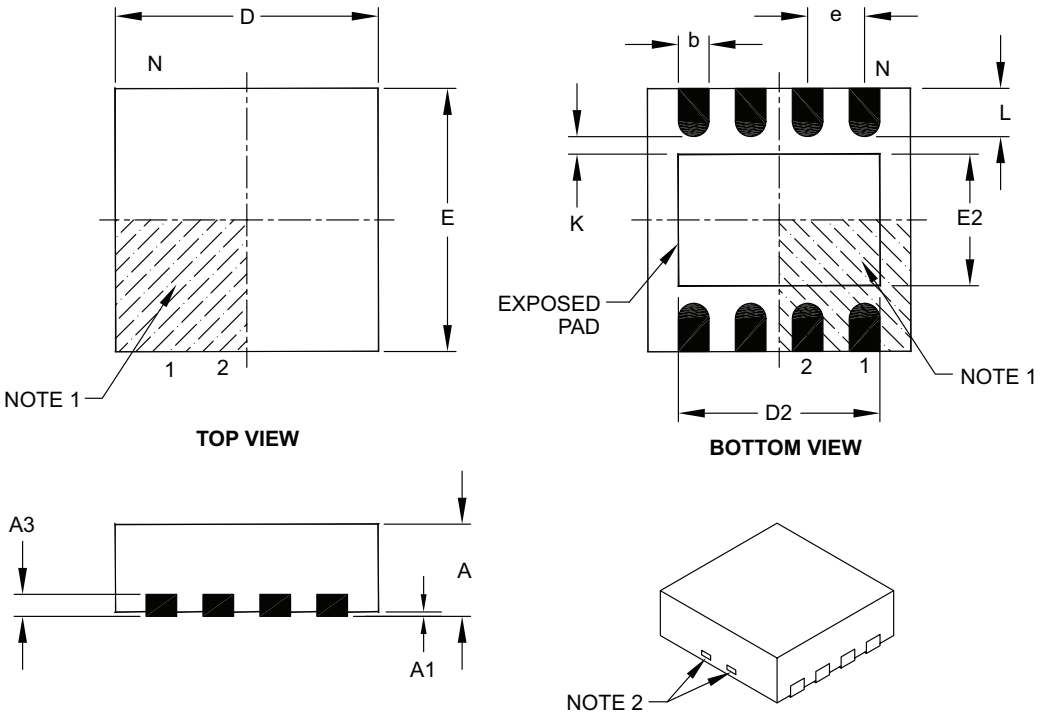

Units		MILLIMETERS		
Dimension Limits		MIN	NOM	MAX
Number of Pins	N	8		
Pitch	e	0.80 BSC		
Overall Height	A	0.80	0.90	1.00
Standoff	A1	0.00	0.02	0.05
Contact Thickness	A3	0.20 REF		
Overall Length	D	4.00 BSC		
Exposed Pad Width	E2	0.00	2.20	2.80
Overall Width	E	4.00 BSC		
Exposed Pad Length	D2	0.00	3.00	3.60
Contact Width	b	0.25	0.30	0.35
Contact Length	L	0.30	0.55	0.65
Contact-to-Exposed Pad	K	0.20	–	–

Notes:

1. Pin 1 visual index feature may vary, but must be located within the hatched area.
2. Package may have one or more exposed tie bars at ends.
3. Package is saw singulated.
4. Dimensioning and tolerancing per ASME Y14.5M.

   BSC: Basic Dimension. Theoretically exact value shown without tolerances.
   REF: Reference Dimension, usually without tolerance, for information purposes only.

Microchip Technology Drawing C04-131C

8-Lead Plastic Dual Flat, No Lead Package (MF) – 6x5 mm Body [DFN-S]

Note: For the most current package drawings, please see the Microchip Packaging Specification located at http://www.microchip.com/packaging

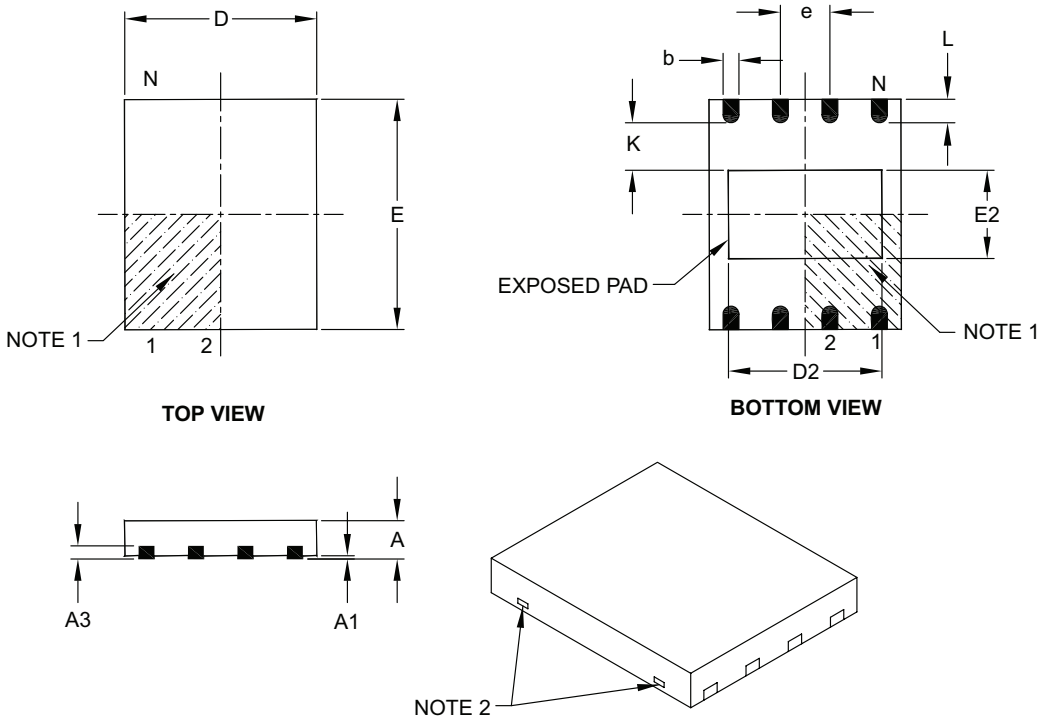

Units		MILLIMETERS		
Dimension Limits		MIN	NOM	MAX
Number of Pins	N	8		
Pitch	e	1.27 BSC		
Overall Height	A	0.80	0.85	1.00
Standoff	A1	0.00	0.01	0.05
Contact Thickness	A3	0.20 REF		
Overall Length	D	5.00 BSC		
Overall Width	E	6.00 BSC		
Exposed Pad Length	D2	3.90	4.00	4.10
Exposed Pad Width	E2	2.20	2.30	2.40
Contact Width	b	0.35	0.40	0.48
Contact Length	L	0.50	0.60	0.75
Contact-to-Exposed Pad	K	0.20	–	–

Notes:

1. Pin 1 visual index feature may vary, but must be located within the hatched area.
2. Package may have one or more exposed tie bars at ends.
3. Package is saw singulated.
4. Dimensioning and tolerancing per ASME Y14.5M.

   BSC: Basic Dimension. Theoretically exact value shown without tolerances.

   REF: Reference Dimension, usually without tolerance, for information purposes only.

Microchip Technology Drawing C04-122B

© 2007 Microchip Technology Inc.

14-Lead Plastic Dual In-Line (P or PD) – 300 mil Body [PDIP]

Note: For the most current package drawings, please see the Microchip Packaging Specification located at http://www.microchip.com/packaging

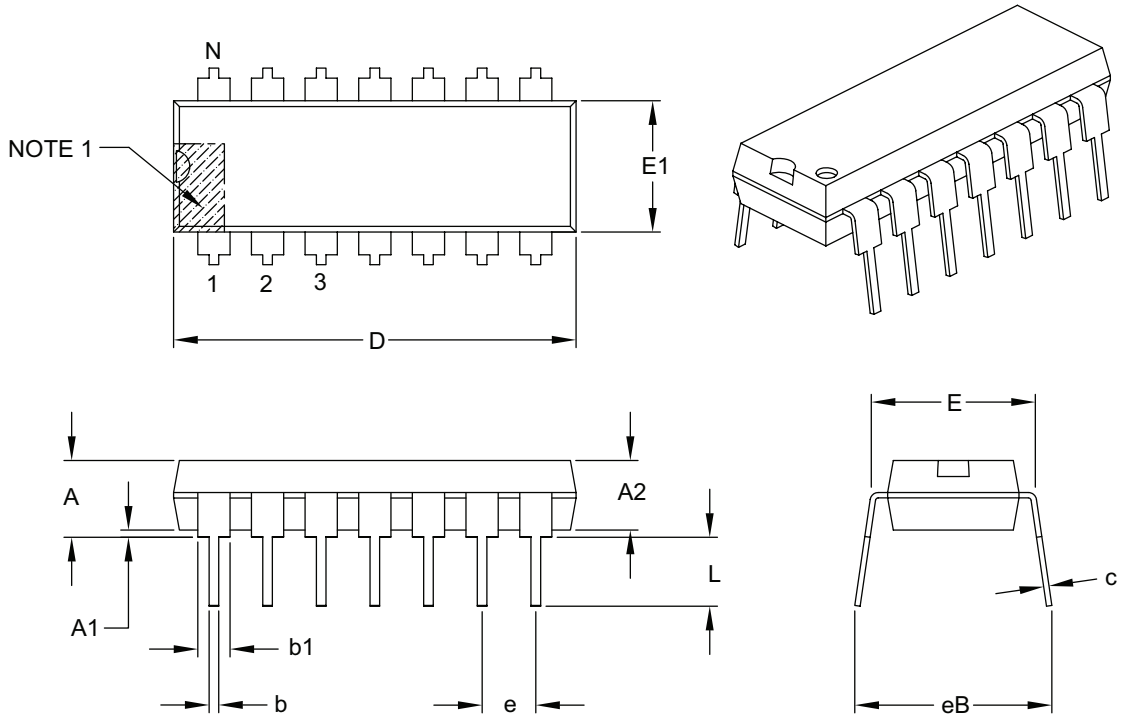

Units		INCHES		
Dimension Limits		MIN	NOM	MAX
Number of Pins	N	14		
Pitch	e	.100 BSC		
Top to Seating Plane	A	–	–	.210
Molded Package Thickness	A2	.115	.130	.195
Base to Seating Plane	A1	.015	–	–
Shoulder to Shoulder Width	E	.290	.310	.325
Molded Package Width	E1	.240	.250	.280
Overall Length	D	.735	.750	.775
Tip to Seating Plane	L	.115	.130	.150
Lead Thickness	c	.008	.010	.015
Upper Lead Width	b1	.045	.060	.070
Lower Lead Width	b	.014	.018	.022
Overall Row Spacing §	eB	–	–	.430

Notes:

1. Pin 1 visual index feature may vary, but must be located with the hatched area.
2. § Significant Characteristic.
3. Dimensions D and E1 do not include mold flash or protrusions. Mold flash or protrusions shall not exceed .010" per side.
4. Dimensioning and tolerancing per ASME Y14.5M.

   BSC: Basic Dimension. Theoretically exact value shown without tolerances.

Microchip Technology Drawing C04-005B

14-Lead Plastic Small Outline (SL or OD) – Narrow, 3.90 mm Body [SOIC]

Note: For the most current package drawings, please see the Microchip Packaging Specification located at http://www.microchip.com/packaging

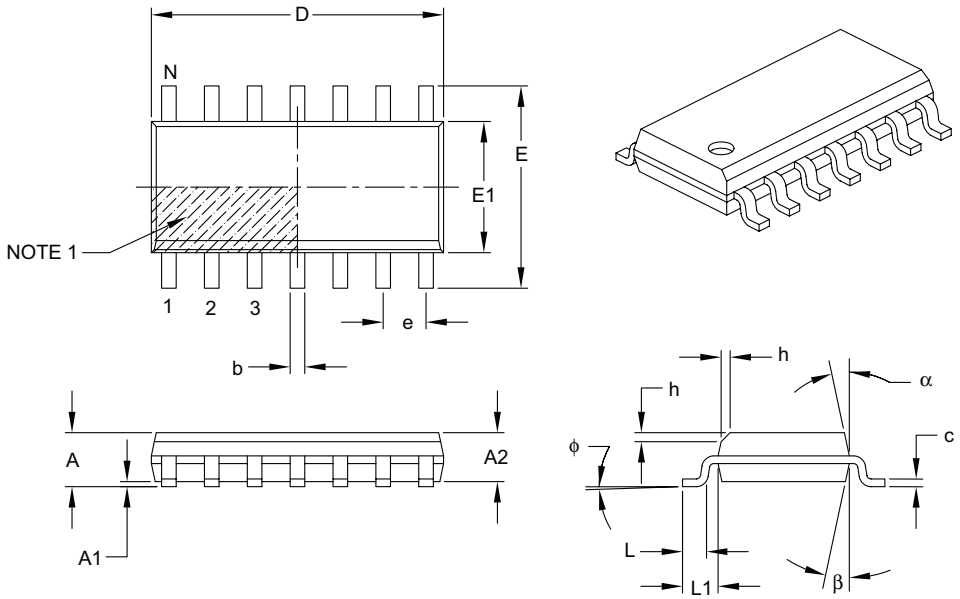

Units		MILLIMETERS		
Dimension Limits		MIN	NOM	MAX
Number of Pins	N	14		
Pitch	e	1.27 BSC		
Overall Height	A	–	–	1.75
Molded Package Thickness	A2	1.25	–	–
Standoff §	A1	0.10	–	0.25
Overall Width	E	6.00 BSC		
Molded Package Width	E1	3.90 BSC		
Overall Length	D	8.65 BSC		
Chamfer (optional)	h	0.25	–	0.50
Foot Length	L	0.40	–	1.27
Footprint	L1	1.04 REF		
Foot Angle	φ	0°	–	8°
Lead Thickness	c	0.17	–	0.25
Lead Width	b	0.31	–	0.51
Mold Draft Angle Top	α	5°	–	15°
Mold Draft Angle Bottom	β	5°	–	15°

Notes:

1. Pin 1 visual index feature may vary, but must be located within the hatched area.
2. § Significant Characteristic.
3. Dimensions D and E1 do not include mold flash or protrusions. Mold flash or protrusions shall not exceed 0.15 mm per side.
4. Dimensioning and tolerancing per ASME Y14.5M.

   BSC: Basic Dimension. Theoretically exact value shown without tolerances.

   REF: Reference Dimension, usually without tolerance, for information purposes only.

Microchip Technology Drawing C04-065B

© 2007 Microchip Technology Inc.

14-Lead Plastic Thin Shrink Small Outline (ST) – 4.4 mm Body [TSSOP]

Note: For the most current package drawings, please see the Microchip Packaging Specification located at http://www.microchip.com/packaging

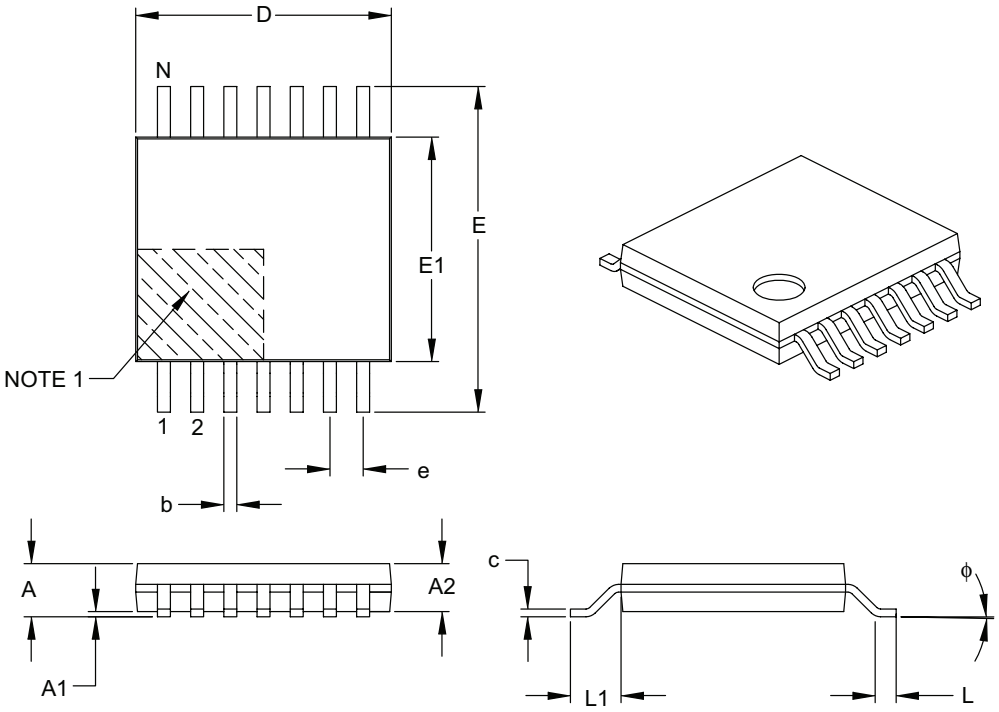

Units		MILLIMETERS		
Dimension Limits		MIN	NOM	MAX
Number of Pins	N	14		
Pitch	e	0.65 BSC		
Overall Height	A	–	–	1.20
Molded Package Thickness	A2	0.80	1.00	1.05
Standoff	A1	0.05	–	0.15
Overall Width	E	6.40 BSC		
Molded Package Width	E1	4.30	4.40	4.50
Molded Package Length	D	4.90	5.00	5.10
Foot Length	L	0.45	0.60	0.75
Footprint	L1	1.00 REF		
Foot Angle	ϕ	0°	–	8°
Lead Thickness	c	0.09	–	0.20
Lead Width	b	0.19	–	0.30

Notes:

1. Pin 1 visual index feature may vary, but must be located within the hatched area.
2. Dimensions D and E1 do not include mold flash or protrusions. Mold flash or protrusions shall not exceed 0.15 mm per side.
3. Dimensioning and tolerancing per ASME Y14.5M.

   BSC: Basic Dimension. Theoretically exact value shown without tolerances.

   REF: Reference Dimension, usually without tolerance, for information purposes only.

Microchip Technology Drawing C04-087B

16-Lead Plastic Quad Flat, No Lead Package (ML) – 4x4x0.9 mm Body [QFN]

Note: For the most current package drawings, please see the Microchip Packaging Specification located at http://www.microchip.com/packaging

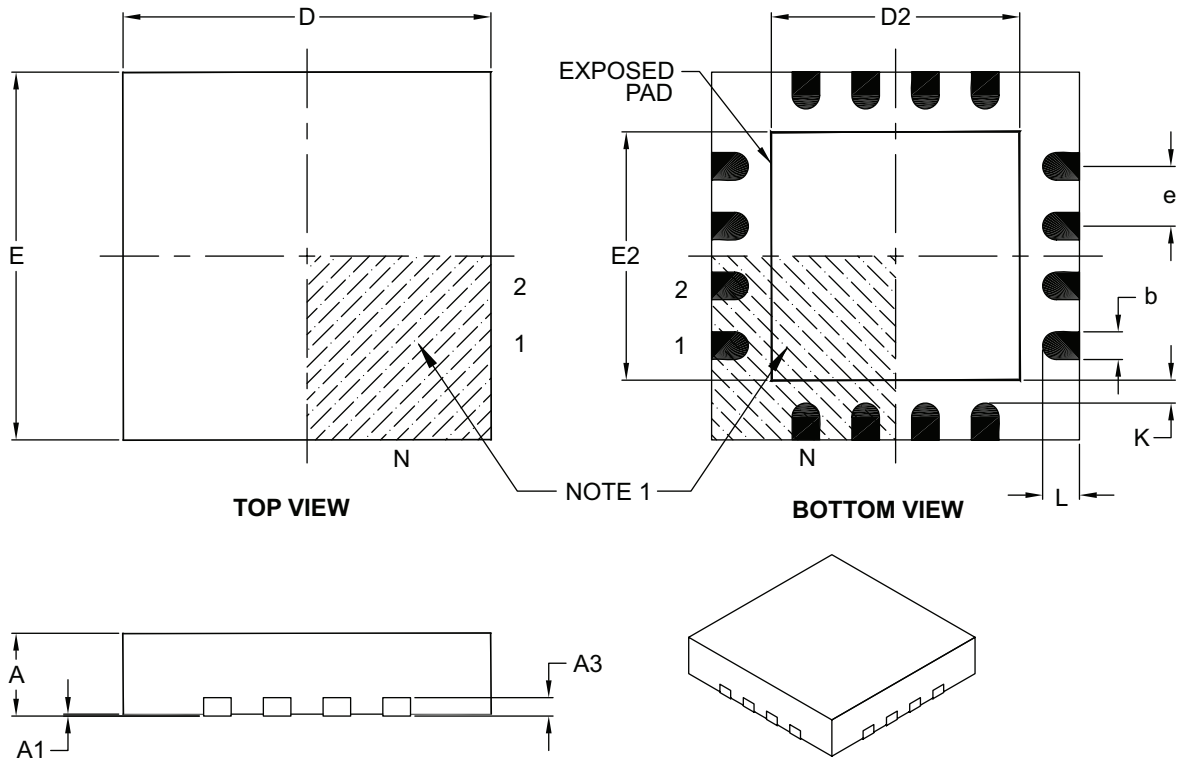

Units		MILLIMETERS		
Dimension Limits		MIN	NOM	MAX
Number of Pins	N	16		
Pitch	e	0.65 BSC		
Overall Height	A	0.80	0.90	1.00
Standoff	A1	0.00	0.02	0.05
Contact Thickness	A3	0.20 REF		
Overall Width	E	4.00 BSC		
Exposed Pad Width	E2	2.50	2.65	2.80
Overall Length	D	4.00 BSC		
Exposed Pad Length	D2	2.50	2.65	2.80
Contact Width	b	0.25	0.30	0.35
Contact Length	L	0.30	0.40	0.50
Contact-to-Exposed Pad	K	0.20	–	–

Notes:

1. Pin 1 visual index feature may vary, but must be located within the hatched area.
2. Package is saw singulated.
3. Dimensioning and tolerancing per ASME Y14.5M.

   BSC: Basic Dimension. Theoretically exact value shown without tolerances.
   REF: Reference Dimension, usually without tolerance, for information purposes only.

Microchip Technology Drawing C04-127B

© 2007 Microchip Technology Inc.

20-Lead Plastic Shrink Small Outline (SS) – 5.30 mm Body [SSOP]

Note: For the most current package drawings, please see the Microchip Packaging Specification located at http://www.microchip.com/packaging

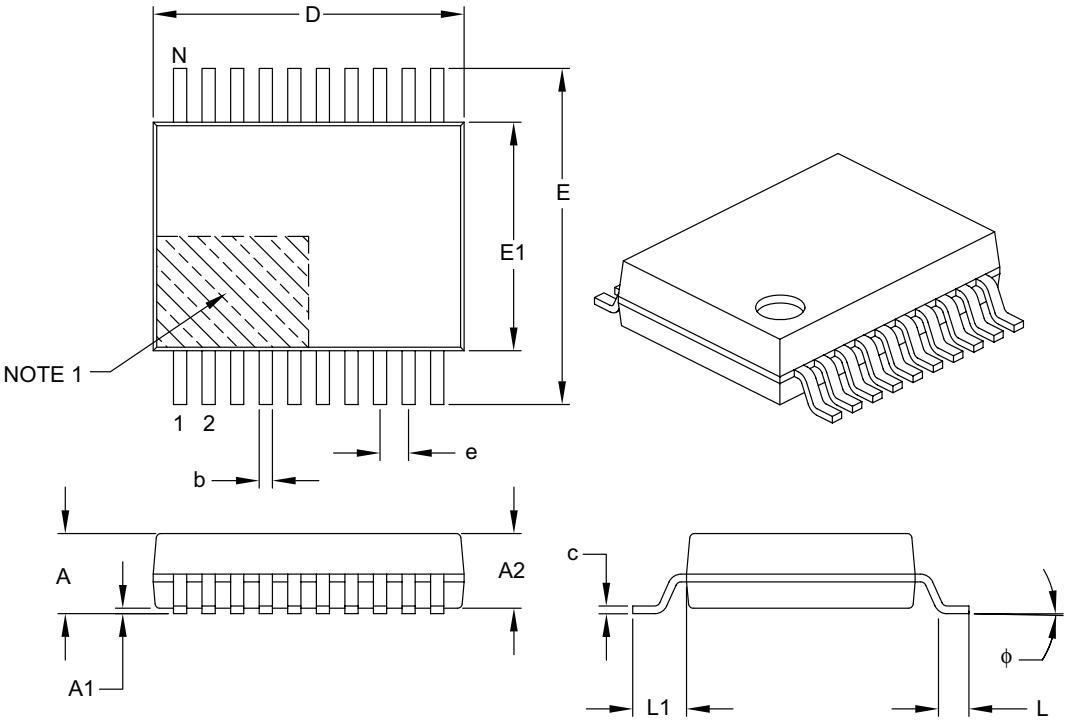

Units		MILLIMETERS		
Dimension Limits		MIN	NOM	MAX
Number of Pins	N	20		
Pitch	e	0.65 BSC		
Overall Height	A	–	–	2.00
Molded Package Thickness	A2	1.65	1.75	1.85
Standoff	A1	0.05	–	–
Overall Width	E	7.40	7.80	8.20
Molded Package Width	E1	5.00	5.30	5.60
Overall Length	D	6.90	7.20	7.50
Foot Length	L	0.55	0.75	0.95
Footprint	L1	1.25 REF		
Lead Thickness	c	0.09	–	0.25
Foot Angle	ϕ	0°	4°	8°
Lead Width	b	0.22	–	0.38

Notes:

1. Pin 1 visual index feature may vary, but must be located within the hatched area.
2. Dimensions D and E1 do not include mold flash or protrusions. Mold flash or protrusions shall not exceed 0.20 mm per side.
3. Dimensioning and tolerancing per ASME Y14.5M.

   BSC: Basic Dimension. Theoretically exact value shown without tolerances.
   REF: Reference Dimension, usually without tolerance, for information purposes only.

Microchip Technology Drawing C04-072B

NOTES:

© 2007 Microchip Technology Inc.

THE MICROCHIP WEB SITE

Microchip provides online support via our WWW site at www.microchip.com. This web site is used as a means to make files and information easily available to customers. Accessible by using your favorite Internet browser, the web site contains the following information:

- **Product Support** – Data sheets and errata, application notes and sample programs, design resources, user's guides and hardware support documents, latest software releases and archived software
- **General Technical Support** – Frequently Asked Questions (FAQ), technical support requests, online discussion groups, Microchip consultant program member listing
- **Business of Microchip** – Product selector and ordering guides, latest Microchip press releases, listing of seminars and events, listings of Microchip sales offices, distributors and factory representatives

CUSTOMER CHANGE NOTIFICATION SERVICE

Microchip's customer notification service helps keep customers current on Microchip products. Subscribers will receive e-mail notification whenever there are changes, updates, revisions or errata related to a specified product family or development tool of interest.

To register, access the Microchip web site at www.microchip.com, click on Customer Change Notification and follow the registration instructions.

CUSTOMER SUPPORT

Users of Microchip products can receive assistance through several channels:

- Distributor or Representative
- Local Sales Office
- Field Application Engineer (FAE)
- Technical Support
- Development Systems Information Line

Customers should contact their distributor, representative or field application engineer (FAE) for support. Local sales offices are also available to help customers. A listing of sales offices and locations is included in the back of this document.

Technical support is available through the web site at: http://support.microchip.com

READER RESPONSE

It is our intention to provide you with the best documentation possible to ensure successful use of your Microchip product. If you wish to provide your comments on organization, clarity, subject matter, and ways in which our documentation can better serve you, please FAX your comments to the Technical Publications Manager at (480) 792-4150.

Please list the following information, and use this outline to provide us with your comments about this document.

To: Technical Publications Manager Total Pages Sent _____

RE: Reader Response

From: Name _____

Company _____

Address _____

City / State / ZIP / Country _____

Telephone: (_____) _____ - _____ FAX: (_____) _____ - _____

Application (optional):

Would you like a reply?____Y ____N

Device: PIC12F635/PIC16F636/639 Literature Number: DS41232D

Questions:

1. What are the best features of this document?

_____

_____

2. How does this document meet your hardware and software development needs?

_____

_____

3. Do you find the organization of this document easy to follow? If not, why?

_____

_____

4. What additions to the document do you think would enhance the structure and subject?

_____

_____

5. What deletions from the document could be made without affecting the overall usefulness?

_____

_____

6. Is there any incorrect or misleading information (what and where)?

_____

_____

7. How would you improve this document?

_____

_____

© 2007 Microchip Technology Inc.

APPENDIX A: DATA SHEET REVISION HISTORY

Revision A

This is a new data sheet.

Revision B

Added PIC16F639 to the data sheet.

Revision C (12/2006)

Added Characterization data; Updated Package Drawings; Added Comparator Voltage Reference section.

Revision D (03/2007)

Replaced Package Drawings (Rev. AM); Replaced Development Support Section. Updated Product ID System.

NOTES:

© 2007 Microchip Technology Inc.

INDEX

A

Absolute Maximum Ratings 163
AC Characteristics
  Analog Front-End (AFE) for PIC16F639 187
  Industrial and Extended 179
  Load Conditions 178
AGC Settling 99
Analog Front-End
  Configuration Registers
    Summary Table 123
Analog Front-End (AFE) 97
  A/D Data Conversion of RSSI Signal 118
  AFE Status Register Bit Condition 127
  AGC 98, 99, 106
  AGC Preserve 106
  Battery Back-up and Batteryless Operation 110
  Block Diagrams
    Bidirectional PKE System Application Example 102
    Functional 100
    LC Input Path 101
    Output Enable Filter Timing 103
    Output Enable Filter Timing (Detailed) 104
  Carrier Clock Detector 98
  Carrier Clock Output 114
    Examples 115
  Command Decoder/Controller 121
  Configuration Registers 122
  Data Slicer 98
  Demodulator 98, 111
  De-Q'ing of Antenna Circuit 110
  Error Detection 109
  Factory Calibration 110
  Fixed Gain Amplifiers 98
  Input Sensitivity Control 105
  LF Field Powering/Battery Back-up
    Examples 110
  LFDATA Output Selection 111
    Case I 112
    Case II 112
  Low Current Modes
    Operating 109
    Sleep 109
    Standby 109
  Modulation Circuit 97
  Modulation Depth 107
    Examples 108
  Output Enable Filter 98
    Configurable Smart 103
  Output Enable Filter Timing (Table) 105
  Power-on Reset 111
  RF Limiter 97
  RSSI 98, 116
    Output Path Diagram 116
    Power-up Sequence Diagram 118
    SPI Read Sequence Diagram 120
    SPI Write Sequence Diagram 119
  RSSI Output Current vs. Input Signal Level
    Example 117
  Sensitivity Control 97
  Soft Reset 107
  SPI Interface Timing Diagram 122
  Timers 98, 99
    Alarm 99
    Auto Channel Selection 98
    Inactivity 99
    Period 99
    Preamble Counters 99
    Pulse Width 99
    RC Oscillator 98
  Tuning Capacitor 97
  Variable Attenuator 97
Analog Input Connection Considerations 73
Assembler
  MPASM Assembler 160

B

Block Diagrams
  Analog Input Model 73
  Clock Source 35
  Comparator 71
  Comparator C1 72
  Comparator C2 72
  Comparator Modes 75
  Crystal Operation 38
  External RC Mode 39
  Fail-Safe Clock Monitor (FSCM) 45
  Functional (AFE) 100
  In-Circuit Serial Programming Connection 147
  Interrupt Logic 140
  On-Chip Reset Circuit 131
  PIC12F635 Device 9
  PIC16F636 Device 10
  PIC16F639 Device 11
  RA0 Pin 52
  RA1 Pin 53
  RA2 Pin 53
  RA3 Pin 54
  RA4 Pin 55
  RA5 Pin 55
  RC0 and RC1 Pins 58
  RC2, RC3 and RC5 Pins 58
  RC4 Pin 59
  Recommended $\overline{\text{MCLR}}$ Circuit 133
  Resonator Operation 38
  Timer1 65
  TMR0/WDT Prescaler 61
  Watchdog Timer (WDT) 143
Brown-out Reset (BOR) 134
  Associated 135
  Specifications 183
  Timing and Characteristics 87, 182

C

C Compilers
  MPLAB C18 160
  MPLAB C30 160
Clock Sources
  External Modes 37
    EC 37
    HS 38
    LP 38
    OST 37
    RC 39
    XT 38
  Internal Modes 39
    Frequency Selection 41
    HFINTOSC 39

INTOSC 39
INTOSCIO 39
LFINTOSC 41
Clock Switching 43
CMCON0 Register 80
CMCON1 Register 82
Code Examples
Assigning Prescaler to Timer0 62
Assigning Prescaler to WDT 62
Data EEPROM Read 93
Data EEPROM Write 93
Indirect Addressing 32
Initializing PORTA 47
Initializing PORTC 57
Saving Status and W Registers in RAM 142
Ultra Low-Power Wake-up Initialization 51
Write Verify 93
Code Protection 146
Comparator 71
Associated registers 85
C2OUT as T1 Gate 81
Configurations 74
I/O Operating Modes 74
Interrupts 77
Operation 71, 76
Operation During Sleep 79
Response Time 77
Synchronizing CxOUT w/Timer1 81
Comparator Voltage Reference (CVREF)
Response Time 77
Specifications 185, 186
Comparator Voltage Reference (CVREF) 83
Effects of a Reset 79
Specifications 185
Comparators
C2OUT as T1 Gate 66
Effects of a Reset 79
Specifications 185
CONFIG Register 130
Configuration Bits 129
CPU Features 129
Customer Change Notification Service 223
Customer Notification Service 223
Customer Support 223

D

Data EEPROM Memory
Associated Registers 94
Code Protection 91, 94
Protection Against Spurious Write 94
Using 93
Data Memory 17
DC and AC Characteristics
Graphs and Tables 191
DC Characteristics
Extended (PIC12F635/PIC16F636) 169
Industrial (PIC12F635/PIC16F636) 167
Industrial (PIC16F639) 174
Industrial/Extended (PIC12F635/PIC16F636) .. 166, 171
Industrial/Extended (PIC16F639) 173, 175
Development Support 159
Device Overview 9

E

EEADR Register 91
EECON1 (EEPROM Control 1) Register 92
EECON1 Register 92
EECON2 (EEPROM Control 2) Register 92
EEDAT Register 91
EEPROM Data Memory
Reading 93
Write Verify 93
Writing 93
Electrical Specifications 163
Errata 7

F

Fail-Safe Clock Monitor 45
Fail-Safe Condition Clearing 45
Fail-Safe Detection 45
Fail-Safe Operation 45
Reset or Wake-up from Sleep 45
Firmware Instructions 149
Fuses. *See* Configuration Bits

G

General Purpose Register (GPR) File 18

I

ID Locations 146
In-Circuit Debugger 147
In-Circuit Serial Programming (ICSP) 147
Indirect Addressing, INDF and FSR Registers 32
Instruction Format 149
Instruction Set 149
ADDLW 151
ADDWF 151
ANDLW 151
ANDWF 151
BCF 151
BSF 151
BTFSC 151
BTFSS 152
CALL 152
CLRF 152
CLRW 152
CLRWDT 152
COMF 152
DECF 152
DECFSZ 153
GOTO 153
INCF 153
INCFSZ 153
IORLW 153
IORWF 153
MOVF 154
MOVLW 154
MOVWF 154
NOP 154
RETFIE 155
RETLW 155
RETURN 155
RLF 156
RRF 156
SLEEP 156
SUBLW 156
SUBWF 157
SWAPF 157
XORLW 157
XORWF 157
Summary Table 150
INTCON Register 28

© 2007 Microchip Technology Inc.

Internal Oscillator Block
INTOSC
Specifications 180, 181
Internet Address 223
Interrupts 139
Associated Registers 141
Comparator 77
Context Saving 142
Data EEPROM Memory Write 92
Interrupt-on-Change 50
PORTA Interrupt-on-change 140
RA2/INT 139
Timer0 140
TMR1 67
INTOSC Specifications 180, 181
IOCA Register 50

K

KEELOQ 95

L

Load Conditions 178

M

$\overline{\text{MCLR}}$ 132
Internal 132
Memory Organization 17
Data 17
Data EEPROM Memory 91
Program 17
Microchip Internet Web Site 223
MPLAB ASM30 Assembler, Linker, Librarian 160
MPLAB ICD 2 In-Circuit Debugger 161
MPLAB ICE 2000 High-Performance Universal
In-Circuit Emulator 161
MPLAB Integrated Development Environment Software 159
MPLAB PM3 Device Programmer 161
MPLAB REAL ICE In-Circuit Emulator System 161
MPLINK Object Linker/MPLIB Object Librarian 160

O

OPCODE Field Descriptions 149
OPTION Register 27
OPTION_REG Register 63
OSCCON Register 36
Oscillator
Associated registers 46, 69
Oscillator Module 35
EC 35
HFINTOSC 35
HS 35
INTOSC 35
INTOSCIO 35
LFINTOSC 35
LP 35
RC 35
RCIO 35
XT 35
Oscillator Parameters 180
Oscillator Specifications 179
Oscillator Start-up Timer (OST)
Specifications 183
Oscillator Switching
Fail-Safe Clock Monitor 45
Two-Speed Clock Start-up 43
OSCTUNE Register 40

P

Packaging 211
Details 213
Marking 211
PCL and PCLATH 32
Stack 32
PCON Register 31
PICSTART Plus Development Programmer 162
PIE1 Register 29
Pin Diagrams 3, 4, 5, 6
Pinout Descriptions
PIC12F635 12
PIC16F636 13
PIC16F639 14
PIR1 Register 30
PLVD
Associated Registers 89
PORTA 47
Additional Pin Functions 47
Interrupt-on-Change 50
Ultra Low-Power Wake-up 47, 51
Weak Pull-down 47
Weak Pull-up 47
Associated Registers 56
Pin Descriptions and Diagrams 52
RA0/C1IN+/ICSPDAT/ULPWU Pin 52
RA1/C1IN-/Vref/ICSPCLK Pin 53
RA2/$\overline{\text{T0CKI}}$/INT/C1OUT Pin 53
RA3/$\overline{\text{MCLR}}$/VPP PIN 54
RA4/$\overline{\text{T1G}}$/OSC2/CLKOUT Pin 55
RA5/T1CKI/OSC1/CLKIN Pin 55
Specifications 181
PORTA Register 48
PORTC 57
Associated Registers 59
RC0/C2IN+ Pin 58
RC2 Pin 58
RC3 Pin 58
RC4/C2OUT Pin 59
RC5 Pin 58
Specifications 181
PORTC Register 57
Power Control (PCON) Register 135
Power-Down Mode (Sleep) 145
Power-on Reset 132
Power-up Timer (PWRT) 132
Specifications 183
Precision Internal Oscillator Parameters 181
Prescaler
Shared WDT/Timer0 62
Switching Prescaler Assignment 62
Product Identification 231
Program Memory 17
Program Memory Map and Stack
PIC12F635 17
PIC16F636/639 17
Programmable Low-Voltage Detect (PLVD) Module 87
Programming, Device Instructions 149

R

Reader Response 224
Read-Modify-Write Operations 149
Registers
Analog Front-End (AFE)
AFE STATUS Register 7 127

Column Parity Register 6 126
Configuration Register 0 123
Configuration Register 1 124
Configuration Register 2 124
Configuration Register 3 125
Configuration Register 4 125
Configuration Register 5 126
CMCON0 (Comparator Control 0) 80
CMCON0 (Comparator Control) Register 79
CMCON1 (Comparator Control 1) 82
CMCON1 (Comparator Control) Register 82
CONFIG (Configuration Word) 130
EEADR (EEPROM Address) 91
EECON1 (EEPROM Control 1) 92
EEDAT (EEPROM Data) 91
INTCON (Interrupt Control) 28
IOCA (Interrupt-on-change PORTA) 50
LVDCON (Low-Voltage Detect Control) 89
OPTION_REG (OPTION) 27
OPTION_REG (Option) 63
OSCCON (Oscillator Control) 36
OSCTUNE (Oscillator Tuning) 40
PCON (Power Control Register) 31
PIE1 (Peripheral Interrupt Enable 1) 29
PIR1 (Peripheral Interrupt Request 1) 30
PORTA 48
PORTC 57
Reset Values 137
Reset Values (Special Registers) 138
STATUS 26
T1CON 68
TRISA (Tri-State PORTA) 48
TRISC (Tri-State PORTC) 57
VRCON (Voltage Reference Control) 84
WDA (Weak Pull-up/Pull-down Direction PORTA) 49
WDTCON (Watchdog Timer Control) 144
WPUDA (Weak Pull-up/Pull-down Enable PORTA) 49
Reset 131
Revision History 225

S

Software Simulator (MPLAB SIM) 160
Special Function Registers (SFR) 18
Maps
PIC12F635 19
PIC16F636/639 20
Summary
PIC12F635, Bank 0 21
PIC12F635, Bank 1 22
PIC12F635/PIC16F636/639, Bank 2 25
PIC16F636/639, Bank 0 23
PIC16F636/639, Bank 1 24
SPI Timing
Analog Front-End (AFE) for PIC16F639 190
STATUS Register 26

T

T1CON Register 68
Thermal Considerations 177
Time-out Sequence 135
Timer0 61
Associated Registers 63
External Clock 62
Interrupt 63
Operation 61, 64
Specifications 184
T0CKI 62
Timer1 64
Associated registers 69
Asynchronous Counter Mode 66
Reading and Writing 66
Interrupt 67
Modes of Operation 64
Operation During Sleep 67
Oscillator 66
Prescaler 66
Specifications 184
Timer1 Gate
Inverting Gate 66
Selecting Source 66, 81
Synchronizing CxOUT w/Timer1 81
TMR1H Register 64
TMR1L Register 64
Timers
Timer1
T1CON 68
Timing Diagrams
Brown-out Reset (BOR) 87, 182
Brown-out Reset Situations 134
CLKOUT and I/O 181
Clock Timing 179
Comparator Output 71
Fail-Safe Clock Monitor (FSCM) 46
INT Pin Interrupt 141
Internal Oscillator Switch Timing 42
Reset, WDT, OST and Power-up Timer 182
Time-out Sequence on Power-up (Delayed $\overline{\text{MCLR}}$) . 136
Time-out Sequence on Power-up ($\overline{\text{MCLR}}$ with VDD) 136
Timer0 and Timer1 External Clock 184
Timer1 Incrementing Edge 67
Two Speed Start-up 44
Wake-up from Sleep through Interrupt 146
Timing Parameter Symbology 178
TRISA 47
TRISA Register 48
TRISC Register 57
Two-Speed Clock Start-up Mode 43

U

Ultra Low-Power Wake-up 13, 14, 47, 51

V

Voltage Reference. *See* Comparator Voltage Reference (CVREF)
Voltage References
Associated registers 85

W

Wake-up from Sleep 145
Wake-up Reset (WUR) 132
Wake-up using Interrupts 145
Watchdog Timer (WDT) 143
Associated Registers 144
Control 143
Oscillator 143
Specifications 183
WDA Register 49
WDTCON Register 144
WPUDA Register 49
WWW Address 223
WWW, On-Line Support 7

© 2007 Microchip Technology Inc.

PRODUCT IDENTIFICATION SYSTEM

To order or obtain information, e.g., on pricing or delivery, refer to the factory or the listed sales office.

PART NO.	X	/XX	XXX
Device	Temperature Range	Package	Pattern

Device:	PIC12F635[1, 2], PIC16F636[1, 2], PIC16F639[1, 2] VDD range 2.0V to 5.5V		
Temperature Range:	I	=	-40°C to +85°C (Industrial)
	E	=	-40°C to +125°C (Extended)
Package:	MD	=	Dual-Flat, No Leads, 8-pin (4x4x0.9 mm)
	MF	=	Dual-Flat, No Leads, Saw Sing. (6x5 mm)
	ML	=	Dual-Flat, No Leads, 16-pin (4x4x0.9 mm)
	P	=	Plastic DIP (300 mil body, 5.30 mm)
	SL	=	14-lead Small Outline (3.90 mm)
	SN	=	8-lead Small Outline (3.90 mm)
	SS	=	20-Lead Plastic Shrink Small Outline (5.30 mm)
	ST	=	14-Lead Thin Shrink Small Outline (4.4 mm)
Pattern:	3-Digit Pattern Code for QTP (blank otherwise)		

Examples:

a) PIC12F635-E/P 301 = Extended Temp., PDIP package, 20 MHz, QTP pattern #301

b) PIC12F635-I/S = Industrial Temp., SOIC package, 20 MHz

Note 1:	F	=	Standard Voltage Range
2:	T	=	in tape and reel PLCC.

WORLDWIDE SALES AND SERVICE

AMERICAS

Corporate Office
2355 West Chandler Blvd.
Chandler, AZ 85224-6199
Tel: 480-792-7200
Fax: 480-792-7277
Technical Support:
http://support.microchip.com
Web Address:
www.microchip.com

Atlanta
Duluth, GA
Tel: 678-957-9614
Fax: 678-957-1455

Boston
Westborough, MA
Tel: 774-760-0087
Fax: 774-760-0088

Chicago
Itasca, IL
Tel: 630-285-0071
Fax: 630-285-0075

Dallas
Addison, TX
Tel: 972-818-7423
Fax: 972-818-2924

Detroit
Farmington Hills, MI
Tel: 248-538-2250
Fax: 248-538-2260

Kokomo
Kokomo, IN
Tel: 765-864-8360
Fax: 765-864-8387

Los Angeles
Mission Viejo, CA
Tel: 949-462-9523
Fax: 949-462-9608

Santa Clara
Santa Clara, CA
Tel: 408-961-6444
Fax: 408-961-6445

Toronto
Mississauga, Ontario,
Canada
Tel: 905-673-0699
Fax: 905-673-6509

ASIA/PACIFIC

Asia Pacific Office
Suites 3707-14, 37th Floor
Tower 6, The Gateway
Habour City, Kowloon
Hong Kong
Tel: 852-2401-1200
Fax: 852-2401-3431

Australia - Sydney
Tel: 61-2-9868-6733
Fax: 61-2-9868-6755

China - Beijing
Tel: 86-10-8528-2100
Fax: 86-10-8528-2104

China - Chengdu
Tel: 86-28-8665-5511
Fax: 86-28-8665-7889

China - Fuzhou
Tel: 86-591-8750-3506
Fax: 86-591-8750-3521

China - Hong Kong SAR
Tel: 852-2401-1200
Fax: 852-2401-3431

China - Qingdao
Tel: 86-532-8502-7355
Fax: 86-532-8502-7205

China - Shanghai
Tel: 86-21-5407-5533
Fax: 86-21-5407-5066

China - Shenyang
Tel: 86-24-2334-2829
Fax: 86-24-2334-2393

China - Shenzhen
Tel: 86-755-8203-2660
Fax: 86-755-8203-1760

China - Shunde
Tel: 86-757-2839-5507
Fax: 86-757-2839-5571

China - Wuhan
Tel: 86-27-5980-5300
Fax: 86-27-5980-5118

China - Xian
Tel: 86-29-8833-7250
Fax: 86-29-8833-7256

ASIA/PACIFIC

India - Bangalore
Tel: 91-80-4182-8400
Fax: 91-80-4182-8422

India - New Delhi
Tel: 91-11-4160-8631
Fax: 91-11-4160-8632

India - Pune
Tel: 91-20-2566-1512
Fax: 91-20-2566-1513

Japan - Yokohama
Tel: 81-45-471- 6166
Fax: 81-45-471-6122

Korea - Gumi
Tel: 82-54-473-4301
Fax: 82-54-473-4302

Korea - Seoul
Tel: 82-2-554-7200
Fax: 82-2-558-5932 or
82-2-558-5934

Malaysia - Penang
Tel: 60-4-646-8870
Fax: 60-4-646-5086

Philippines - Manila
Tel: 63-2-634-9065
Fax: 63-2-634-9069

Singapore
Tel: 65-6334-8870
Fax: 65-6334-8850

Taiwan - Hsin Chu
Tel: 886-3-572-9526
Fax: 886-3-572-6459

Taiwan - Kaohsiung
Tel: 886-7-536-4818
Fax: 886-7-536-4803

Taiwan - Taipei
Tel: 886-2-2500-6610
Fax: 886-2-2508-0102

Thailand - Bangkok
Tel: 66-2-694-1351
Fax: 66-2-694-1350

EUROPE

Austria - Wels
Tel: 43-7242-2244-39
Fax: 43-7242-2244-393

Denmark - Copenhagen
Tel: 45-4450-2828
Fax: 45-4485-2829

France - Paris
Tel: 33-1-69-53-63-20
Fax: 33-1-69-30-90-79

Germany - Munich
Tel: 49-89-627-144-0
Fax: 49-89-627-144-44

Italy - Milan
Tel: 39-0331-742611
Fax: 39-0331-466781

Netherlands - Drunen
Tel: 31-416-690399
Fax: 31-416-690340

Spain - Madrid
Tel: 34-91-708-08-90
Fax: 34-91-708-08-91

UK - Wokingham
Tel: 44-118-921-5869
Fax: 44-118-921-5820

12/08/06

© 2007 Microchip Technology Inc.