PIC12F508/509/16F505
Data Sheet

8/14-Pin, 8-Bit Flash Microcontrollers

© 2009 Microchip Technology Inc.

Note the following details of the code protection feature on Microchip devices:

- Microchip products meet the specification contained in their particular Microchip Data Sheet.
- Microchip believes that its family of products is one of the most secure families of its kind on the market today, when used in the intended manner and under normal conditions.
- There are dishonest and possibly illegal methods used to breach the code protection feature. All of these methods, to our knowledge, require using the Microchip products in a manner outside the operating specifications contained in Microchip's Data Sheets. Most likely, the person doing so is engaged in theft of intellectual property.
- Microchip is willing to work with the customer who is concerned about the integrity of their code.
- Neither Microchip nor any other semiconductor manufacturer can guarantee the security of their code. Code protection does not mean that we are guaranteeing the product as "unbreakable."

Code protection is constantly evolving. We at Microchip are committed to continuously improving the code protection features of our products. Attempts to break Microchip's code protection feature may be a violation of the Digital Millennium Copyright Act. If such acts allow unauthorized access to your software or other copyrighted work, you may have a right to sue for relief under that Act.

Information contained in this publication regarding device applications and the like is provided only for your convenience and may be superseded by updates. It is your responsibility to ensure that your application meets with your specifications. MICROCHIP MAKES NO REPRESENTATIONS OR WARRANTIES OF ANY KIND WHETHER EXPRESS OR IMPLIED, WRITTEN OR ORAL, STATUTORY OR OTHERWISE, RELATED TO THE INFORMATION, INCLUDING BUT NOT LIMITED TO ITS CONDITION, QUALITY, PERFORMANCE, MERCHANTABILITY OR FITNESS FOR PURPOSE**.** Microchip disclaims all liability arising from this information and its use. Use of Microchip devices in life support and/or safety applications is entirely at the buyer's risk, and the buyer agrees to defend, indemnify and hold harmless Microchip from any and all damages, claims, suits, or expenses resulting from such use. No licenses are conveyed, implicitly or otherwise, under any Microchip intellectual property rights.

Trademarks

The Microchip name and logo, the Microchip logo, dsPIC, KEELOQ, KEELOQ logo, MPLAB, PIC, PICmicro, PICSTART, rfPIC and UNI/O are registered trademarks of Microchip Technology Incorporated in the U.S.A. and other countries.

FilterLab, Hampshire, HI-TECH C, Linear Active Thermistor, MXDEV, MXLAB, SEEVAL and The Embedded Control Solutions Company are registered trademarks of Microchip Technology Incorporated in the U.S.A.

Analog-for-the-Digital Age, Application Maestro, CodeGuard, dsPICDEM, dsPICDEM.net, dsPICworks, dsSPEAK, ECAN, ECONOMONITOR, FanSense, HI-TIDE, In-Circuit Serial Programming, ICSP, Mindi, MiWi, MPASM, MPLAB Certified logo, MPLIB, MPLINK, mTouch, Octopus, Omniscient Code Generation, PICC, PICC-18, PICDEM, PICDEM.net, PICkit, PICtail, PIC^{32} logo, REAL ICE, rfLAB, Select Mode, Total Endurance, TSHARC, UniWinDriver, WiperLock and ZENA are trademarks of Microchip Technology Incorporated in the U.S.A. and other countries.

SQTP is a service mark of Microchip Technology Incorporated in the U.S.A.

All other trademarks mentioned herein are property of their respective companies.

© 2009, Microchip Technology Incorporated, Printed in the U.S.A., All Rights Reserved.

Printed on recycled paper.

QUALITY MANAGEMENT SYSTEM
CERTIFIED BY DNV
ISO/TS 16949:2002

Microchip received ISO/TS-16949:2002 certification for its worldwide headquarters, design and wafer fabrication facilities in Chandler and Tempe, Arizona; Gresham, Oregon and design centers in California and India. The Company's quality system processes and procedures are for its PIC® MCUs and dsPIC® DSCs, KEELOQ® code hopping devices, Serial EEPROMs, microperipherals, nonvolatile memory and analog products. In addition, Microchip's quality system for the design and manufacture of development systems is ISO 9001:2000 certified.

PIC12F508/509/16F505

8/14-Pin, 8-Bit Flash Microcontrollers

Devices Included In This Data Sheet:

- PIC12F508
- PIC12F509
- PIC16F505

High-Performance RISC CPU:

- Only 33 Single-Word Instructions to Learn
- All Single-Cycle Instructions Except for Program Branches, which are Two-Cycle
- 12-Bit Wide Instructions
- 2-Level Deep Hardware Stack
- Direct, Indirect and Relative Addressing modes for Data and Instructions
- 8-Bit Wide Data Path
- 8 Special Function Hardware Registers
- Operating Speed:
  - DC – 20 MHz clock input (PIC16F505 only)
  - DC – 200 ns instruction cycle (PIC16F505 only)
  - DC – 4 MHz clock input
  - DC – 1000 ns instruction cycle

Special Microcontroller Features:

- 4 MHz Precision Internal Oscillator:
  - Factory calibrated to ±1%
- In-Circuit Serial Programming™ (ICSP™)
- In-Circuit Debugging (ICD) Support
- Power-On Reset (POR)
- Device Reset Timer (DRT)
- Watchdog Timer (WDT) with Dedicated On-Chip RC Oscillator for Reliable Operation
- Programmable Code Protection
- Multiplexed $\overline{\text{MCLR}}$ Input Pin
- Internal Weak Pull-Ups on I/O Pins
- Power-Saving Sleep mode
- Wake-Wp from Sleep on Pin Change
- Selectable Oscillator Options:
  - INTRC: 4 MHz precision Internal oscillator
  - EXTRC: External low-cost RC oscillator
  - XT: Standard crystal/resonator
  - HS: High-speed crystal/resonator (PIC16F505 only)
  - LP: Power-saving, low-frequency crystal
  - EC: High-speed external clock input (PIC16F505 only)

Low-Power Features/CMOS Technology:

- Operating Current:
  - < 175 µA @ 2V, 4 MHz, typical
- Standby Current:
  - 100 nA @ 2V, typical
- Low-Power, High-Speed Flash Technology:
  - 100,000 Flash endurance
  - > 40 year retention
- Fully Static Design
- Wide Operating Voltage Range: 2.0V to 5.5V
- Wide Temperature Range:
  - Industrial: -40°C to +85°C
  - Extended: -40°C to +125°C

Peripheral Features (PIC12F508/509):

- 6 I/O Pins:
  - 5 I/O pins with individual direction control
  - 1 input only pin
  - High current sink/source for direct LED drive
  - Wake-on-change
  - Weak pull-ups
- 8-Bit Real-Time Clock/Counter (TMR0) with 8-Bit Programmable Prescaler

Peripheral Features (PIC16F505):

- 12 I/O Pins:
  - 11 I/O pins with individual direction control
  - 1 input only pin
  - High current sink/source for direct LED drive
  - Wake-on-change
  - Weak pull-ups
- 8-Bit Real-Time Clock/Counter (TMR0) with 8-Bit Programmable Prescaler

© 2009 Microchip Technology Inc.

Pin Diagrams

PDIP, SOIC, TSSOP

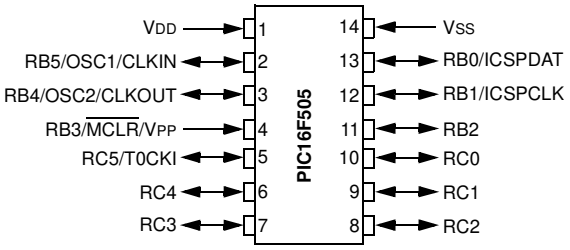

PDIP, SOIC, MSOP

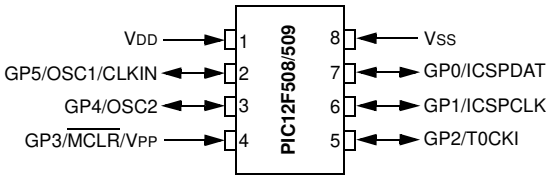

DFN

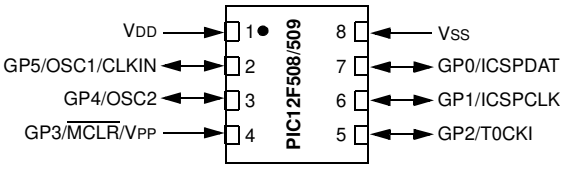

PIC16F505 16-Pin Diagram (QFN)

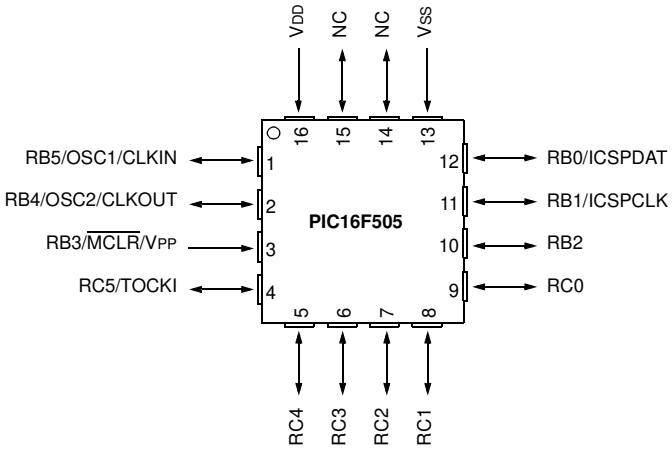

© 2009 Microchip Technology Inc.

Device	Program Memory	Data Memory	I/O	Timers 8-bit
	Flash (words)	SRAM (bytes)		
PIC12F508	512	25	6	1
PIC12F509	1024	41	6	1
PIC16F505	1024	72	12	1

Table of Contents

1.0 General Description 7
2.0 PIC12F508/509/16F505 Device Varieties 9
3.0 Architectural Overview 11
4.0 Memory Organization 17
5.0 I/O Port 31
6.0 Timer0 Module and TMR0 Register 35
7.0 Special Features Of The CPU 41
8.0 Instruction Set Summary 57
9.0 Development Support 65
10.0 Electrical Characteristics 69
11.0 DC and AC Characteristics Graphs and Charts 81
12.0 Packaging Information 91
Index 105
The Microchip Web Site 107
Customer Change Notification Service 107
Customer Support 107
Reader Response 108
Product Identification System 109

TO OUR VALUED CUSTOMERS

It is our intention to provide our valued customers with the best documentation possible to ensure successful use of your Microchip products. To this end, we will continue to improve our publications to better suit your needs. Our publications will be refined and enhanced as new volumes and updates are introduced.

If you have any questions or comments regarding this publication, please contact the Marketing Communications Department via E-mail at **docerrors@mail.microchip.com** or fax the **Reader Response Form** in the back of this data sheet to (480) 792-4150. We welcome your feedback.

Most Current Data Sheet

To obtain the most up-to-date version of this data sheet, please register at our Worldwide Web site at:

http://www.microchip.com

You can determine the version of a data sheet by examining its literature number found on the bottom outside corner of any page. The last character of the literature number is the version number, (e.g., DS30000A is version A of document DS30000).

Errata

An errata sheet, describing minor operational differences from the data sheet and recommended workarounds, may exist for current devices. As device/documentation issues become known to us, we will publish an errata sheet. The errata will specify the revision of silicon and revision of document to which it applies.

To determine if an errata sheet exists for a particular device, please check with one of the following:

- Microchip's Worldwide Web site; http://www.microchip.com
- Your local Microchip sales office (see last page)
- The Microchip Corporate Literature Center; U.S. FAX: (480) 792-7277

When contacting a sales office or the literature center, please specify which device, revision of silicon and data sheet (include literature number) you are using.

Customer Notification System

Register on our web site at **www.microchip.com/cn** to receive the most current information on all of our products.

© 2009 Microchip Technology Inc.

1.0 GENERAL DESCRIPTION

The PIC12F508/509/16F505 devices from Microchip Technology are low-cost, high-performance, 8-bit, fully-static, Flash-based CMOS microcontrollers. They employ a RISC architecture with only 33 single-word/single-cycle instructions. All instructions are single cycle (200 µs) except for program branches, which take two cycles. The PIC12F508/509/16F505 devices deliver performance an order of magnitude higher than their competitors in the same price category. The 12-bit wide instructions are highly symmetrical, resulting in a typical 2:1 code compression over other 8-bit microcontrollers in its class. The easy to use and easy to remember instruction set reduces development time significantly.

The PIC12F508/509/16F505 products are equipped with special features that reduce system cost and power requirements. The Power-on Reset (POR) and Device Reset Timer (DRT) eliminate the need for external Reset circuitry. There are four oscillator configurations to choose from (six on the PIC16F505), including INTRC Internal Oscillator mode and the power-saving LP (Low-Power) Oscillator mode. Power-Saving Sleep mode, Watchdog Timer and code protection features improve system cost, power and reliability.

The PIC12F508/509/16F505 devices are available in the cost-effective Flash programmable version, which is suitable for production in any volume. The customer can take full advantage of Microchip's price leadership in Flash programmable microcontrollers, while benefiting from the Flash programmable flexibility.

The PIC12F508/509/16F505 products are supported by a full-featured macro assembler, a software simulator, an in-circuit emulator, a 'C' compiler, a low-cost development programmer and a full featured programmer. All the tools are supported on IBM® PC and compatible machines.

1.1 Applications

The PIC12F508/509/16F505 devices fit in applications ranging from personal care appliances and security systems to low-power remote transmitters/receivers. The Flash technology makes customizing application programs (transmitter codes, appliance settings, receiver frequencies, etc.) extremely fast and convenient. The small footprint packages, for through hole or surface mounting, make these microcontrollers perfect for applications with space limitations. Low cost, low power, high performance, ease-of-use and I/O flexibility make the PIC12F508/509/16F505 devices very versatile even in areas where no microcontroller use has been considered before (e.g., timer functions, logic and PLDs in larger systems and coprocessor applications).

TABLE 1-1: PIC12F508/509/16F505 DEVICES

		PIC12F508	PIC12F509	PIC16F505
Clock	Maximum Frequency of Operation (MHz)	4	4	20
Memory	Flash Program Memory (words)	512	1024	1024
	Data Memory (bytes)	25	41	72
Peripherals	Timer Module(s)	TMR0	TMR0	TMR0
	Wake-up from Sleep on Pin Change	Yes	Yes	Yes
Features	I/O Pins	5	5	11
	Input Pins	1	1	1
	Internal Pull-ups	Yes	Yes	Yes
	In-Circuit Serial Programming	Yes	Yes	Yes
	Number of Instructions	33	33	33
	Packages	8-pin PDIP, SOIC, MSOP, DFN	8-pin PDIP, SOIC, MSOP, DFN	14-pin PDIP, SOIC, TSSOP

The PIC12F508/509/16F505 devices have Power-on Reset, selectable Watchdog Timer, selectable code-protect, high I/O current capability and precision internal oscillator.
The PIC12F508/509/16F505 devices use serial programming with data pin RB0/GP0 and clock pin RB1/GP1.

© 2009 Microchip Technology Inc.

NOTES:

© 2009 Microchip Technology Inc.

2.0 PIC12F508/509/16F505 DEVICE VARIETIES

A variety of packaging options are available. Depending on application and production requirements, the proper device option can be selected using the information in this section. When placing orders, please use the PIC12F508/509/16F505 Product Identification System at the back of this data sheet to specify the correct part number.

2.1 Quick Turn Programming (QTP) Devices

Microchip offers a QTP programming service for factory production orders. This service is made available for users who choose not to program medium-to-high quantity units and whose code patterns have stabilized. The devices are identical to the Flash devices but with all Flash locations and fuse options already programmed by the factory. Certain code and prototype verification procedures do apply before production shipments are available. Please contact your local Microchip Technology sales office for more details.

2.2 Serialized Quick Turn Programming^{SM} (SQTP^{SM}) Devices

Microchip offers a unique programming service, where a few user-defined locations in each device are programmed with different serial numbers. The serial numbers may be random, pseudo-random or sequential.

Serial programming allows each device to have a unique number, which can serve as an entry code, password or ID number.

NOTES:

© 2009 Microchip Technology Inc.

3.0 ARCHITECTURAL OVERVIEW

The high performance of the PIC12F508/509/16F505 devices can be attributed to a number of architectural features commonly found in RISC microprocessors. To begin with, the PIC12F508/509/16F505 devices use a Harvard architecture in which program and data are accessed on separate buses. This improves bandwidth over traditional von Neumann architectures where program and data are fetched on the same bus. Separating program and data memory further allows instructions to be sized differently than the 8-bit wide data word. Instruction opcodes are 12 bits wide, making it possible to have all single-word instructions. A 12-bit wide program memory access bus fetches a 12-bit instruction in a single cycle. A two-stage pipeline overlaps fetch and execution of instructions. Consequently, all instructions (33) execute in a single cycle (200 ns @ 20 MHz, 1 µs @ 4 MHz) except for program branches.

Table 3-1 below lists program memory (Flash) and data memory (RAM) for the PIC12F508/509/16F505 devices.

TABLE 3-1: PIC12F508/509/16F505 MEMORY

Device	Memory	
	Program	Data
PIC12F508	512 x 12	25 x 8
PIC12F509	1024 x 12	41 x 8
PIC16F505	1024 x 12	72 x 8

The PIC12F508/509/16F505 devices can directly or indirectly address its register files and data memory. All Special Function Registers (SFR), including the PC, are mapped in the data memory. The PIC12F508/509/16F505 devices have a highly orthogonal (symmetrical) instruction set that makes it possible to carry out any operation, on any register, using any addressing mode. This symmetrical nature and lack of “special optimal situations” make programming with the PIC12F508/509/16F505 devices simple, yet efficient. In addition, the learning curve is reduced significantly.

The PIC12F508/509/16F505 devices contain an 8-bit ALU and working register. The ALU is a general purpose arithmetic unit. It performs arithmetic and Boolean functions between data in the working register and any register file.

The ALU is 8 bits wide and capable of addition, subtraction, shift and logical operations. Unless otherwise mentioned, arithmetic operations are two’s complement in nature. In two-operand instructions, one operand is typically the W (working) register. The other operand is either a file register or an immediate constant. In single operand instructions, the operand is either the W register or a file register.

The W register is an 8-bit working register used for ALU operations. It is not an addressable register.

Depending on the instruction executed, the ALU may affect the values of the Carry (C), Digit Carry (DC) and Zero (Z) bits in the STATUS register. The C and DC bits operate as a $\overline{\text{borrow}}$ and $\overline{\text{digit borrow}}$ out bit, respectively, in subtraction. See the `SUBWF` and `ADDWF` instructions for examples.

Simplified block diagrams are shown in Figure 3-1 and Figure 3-2, with the corresponding pin described in Table 3-2 and Table 3-3.

FIGURE 3-1: PIC12F508/509 BLOCK DIAGRAM

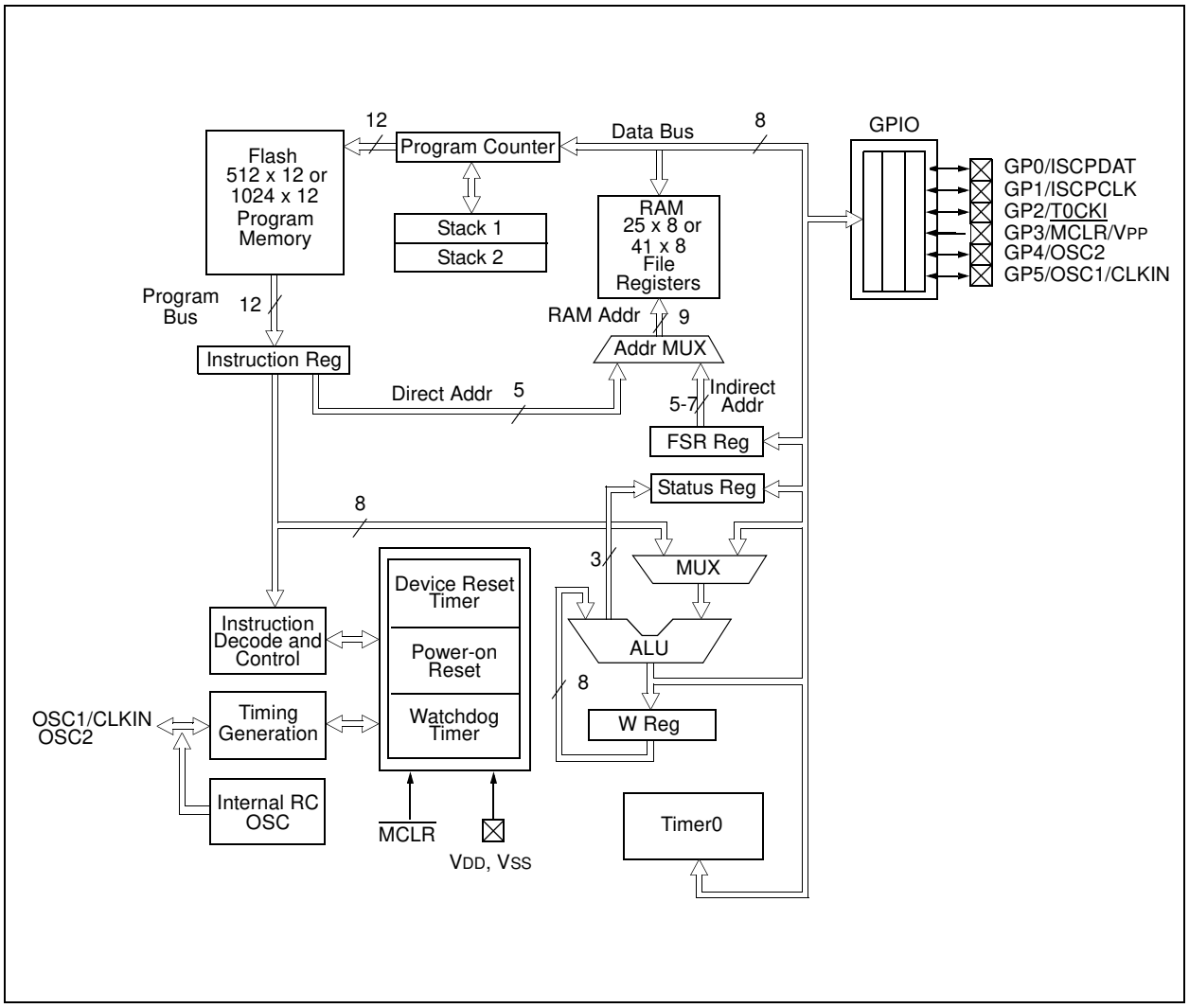

© 2009 Microchip Technology Inc.

TABLE 3-2: PIC12F508/509 PINOUT DESCRIPTION

Name	Function	Input Type	Output Type	Description
GP0/ICSPDAT	GP0	TTL	CMOS	Bidirectional I/O pin. Can be software programmed for internal weak pull-up and wake-up from Sleep on pin change.
	ICSPDAT	ST	CMOS	In-Circuit Serial Programming™ data pin.
GP1/ICSPCLK	GP1	TTL	CMOS	Bidirectional I/O pin. Can be software programmed for internal weak pull-up and wake-up from Sleep on pin change.
	ICSPCLK	ST	CMOS	In-Circuit Serial Programming clock pin.
GP2/T0CKI	GP2	TTL	CMOS	Bidirectional I/O pin.
	T0CKI	ST	—	Clock input to TMR0.
GP3/$\overline{\text{MCLR}}$/VPP	GP3	TTL	—	Input pin. Can be software programmed for internal weak pull-up and wake-up from Sleep on pin change.
	$\overline{\text{MCLR}}$	ST	—	Master Clear (Reset). When configured as $\overline{\text{MCLR}}$, this pin is an active-low Reset to the device. Voltage on $\overline{\text{MCLR}}$/VPP must not exceed VDD during normal device operation or the device will enter Programming mode. Weak pull-up always on if configured as $\overline{\text{MCLR}}$.
	VPP	HV	—	Programming voltage input.
GP4/OSC2	GP4	TTL	CMOS	Bidirectional I/O pin.
	OSC2	—	XTAL	Oscillator crystal output. Connections to crystal or resonator in Crystal Oscillator mode (XT and LP modes only, GPIO in other modes).
GP5/OSC1/CLKIN	GP5	TTL	CMOS	Bidirectional I/O pin.
	OSC1	XTAL	—	Oscillator crystal input.
	CLKIN	ST	—	External clock source input.
VDD	VDD	—	P	Positive supply for logic and I/O pins.
VSS	VSS	—	P	Ground reference for logic and I/O pins.

Legend: I = Input, O = Output, I/O = Input/Output, P = Power, — = Not used, TTL = TTL input, ST = Schmitt Trigger input, HV = High Voltage

FIGURE 3-2: PIC16F505 BLOCK DIAGRAM

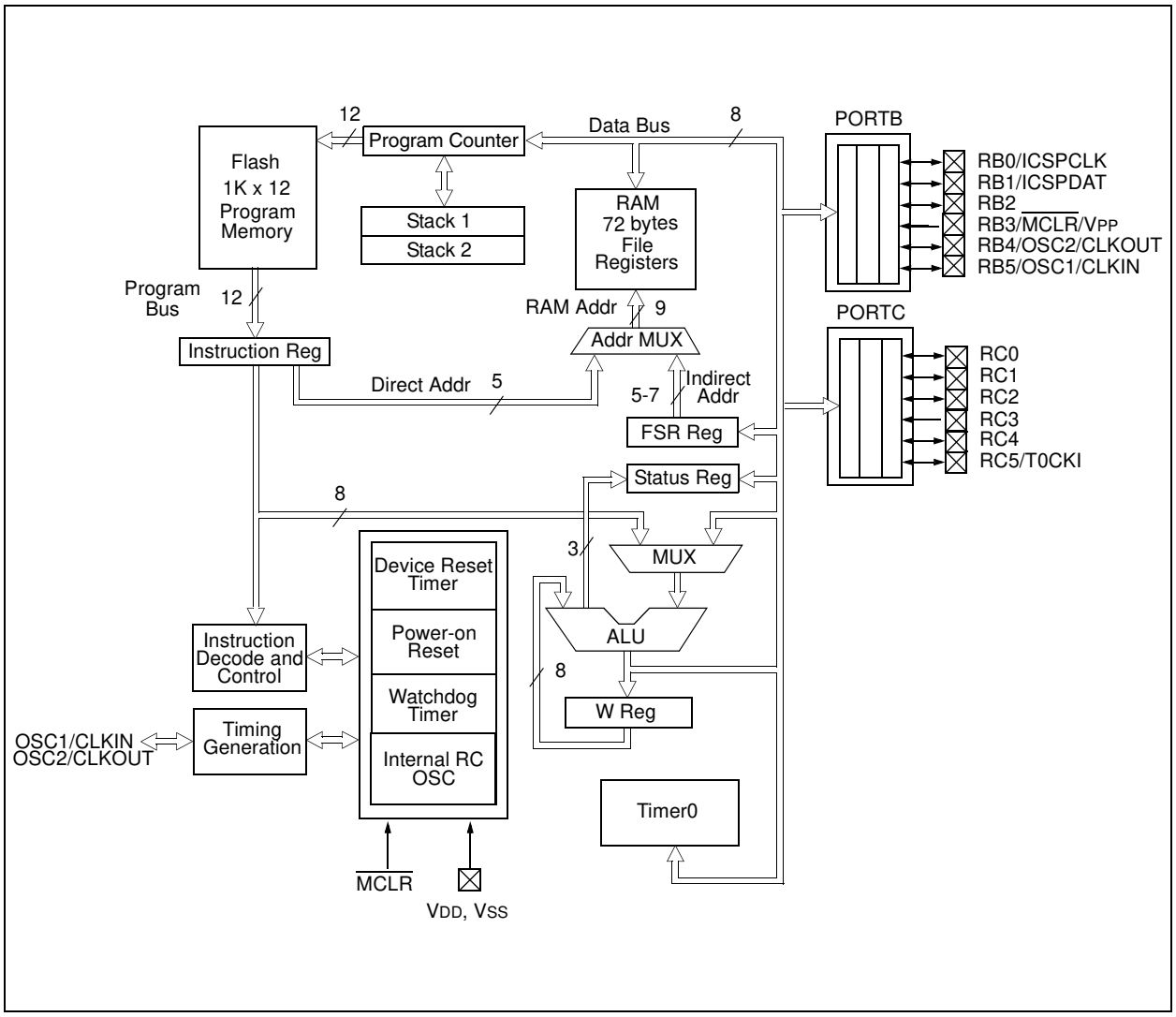

© 2009 Microchip Technology Inc.

TABLE 3-3: PIC16F505 PINOUT DESCRIPTION

Name	Function	Input Type	Output Type	Description
RB0/ICSPDAT	RB0	TTL	CMOS	Bidirectional I/O pin. Can be software programmed for internal weak pull-up and wake-up from Sleep on pin change.
	ICSPDAT	ST	CMOS	In-Circuit Serial Programming™ data pin.
RB1/ICSPCLK	RB1	TTL	CMOS	Bidirectional I/O pin. Can be software programmed for internal weak pull-up and wake-up from Sleep on pin change.
	ICSPCLK	ST	CMOS	In-Circuit Serial Programming clock pin.
RB2	RB2	TTL	CMOS	Bidirectional I/O pin.
RB3/$\overline{\text{MCLR}}$/VPP	RB3	TTL	—	Input port. Can be software programmed for internal weak pull-up and wake-up from Sleep on pin change.
	$\overline{\text{MCLR}}$	ST	—	Master Clear (Reset). When configured as $\overline{\text{MCLR}}$, this pin is an active-low Reset to the device. Voltage on $\overline{\text{MCLR}}$/VPP must not exceed VDD during normal device operation or the device will enter Programming mode. Weak pull-up always on if configured as $\overline{\text{MCLR}}$.
	VPP	HV	—	Programming voltage input.
RB4/OSC2/CLKOUT	RB4	TTL	CMOS	Bidirectional I/O pin. Can be software programmed for internal weak pull-up and wake-up from Sleep on pin change.
	OSC2	—	XTAL	Oscillator crystal output. Connections to crystal or resonator in Crystal Oscillator mode (XT, HS and LP modes only).
	CLKOUT	—	CMOS	In EXTRC and INTRC modes, the pin output can be configured for CLKOUT, which has 1/4 the frequency of OSC1 and denotes the instruction cycle rate.
RB5/OSC1/CLKIN	RB5	TTL	CMOS	Bidirectional I/O pin.
	OSC1	XTAL	—	Crystal input.
	CLKIN	ST	—	External clock source input.
RC0	RC0	TTL	CMOS	Bidirectional I/O pin.
RC1	RC1	TTL	CMOS	Bidirectional I/O pin.
RC2	RC2	TTL	CMOS	Bidirectional I/O pin.
RC3	RC3	TTL	CMOS	Bidirectional I/O pin.
RC4	RC4	TTL	CMOS	Bidirectional I/O pin.
RC5/T0CKI	RC5	TTL	CMOS	Bidirectional I/O pin.
	T0CKI	ST	—	Clock input to TMR0.
VDD	VDD	—	P	Positive supply for logic and I/O pins.
VSS	VSS	—	P	Ground reference for logic and I/O pins.

Legend: I = Input, O = Output, I/O = Input/Output, P = Power, — = Not used, TTL = TTL input, ST = Schmitt Trigger input, HV = High Voltage

3.1 Clocking Scheme/Instruction Cycle

The clock input (OSC1/CLKIN pin) is internally divided by four to generate four non-overlapping quadrature clocks, namely Q1, Q2, Q3 and Q4. Internally, the PC is incremented every Q1 and the instruction is fetched from program memory and latched into the instruction register in Q4. It is decoded and executed during the following Q1 through Q4. The clocks and instruction execution flow is shown in Figure 3-3 and Example 3-1.

3.2 Instruction Flow/Pipelining

An instruction cycle consists of four Q cycles (Q1, Q2, Q3 and Q4). The instruction fetch and execute are pipelined such that fetch takes one instruction cycle, while decode and execute take another instruction cycle. However, due to the pipelining, each instruction effectively executes in one cycle. If an instruction causes the PC to change (e.g., `GOTO`), then two cycles are required to complete the instruction (Example 3-1).

A fetch cycle begins with the PC incrementing in Q1.

In the execution cycle, the fetched instruction is latched into the Instruction Register (IR) in cycle Q1. This instruction is then decoded and executed during the Q2, Q3 and Q4 cycles. Data memory is read during Q2 (operand read) and written during Q4 (destination write).

FIGURE 3-3: CLOCK/INSTRUCTION CYCLE

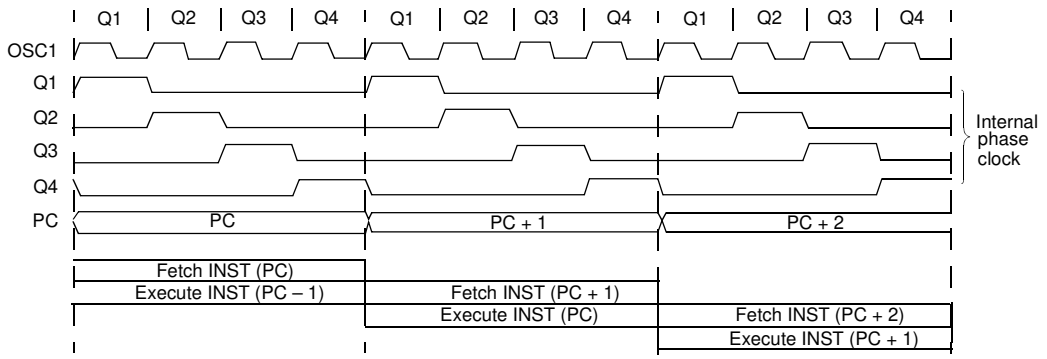

EXAMPLE 3-1: INSTRUCTION PIPELINE FLOW

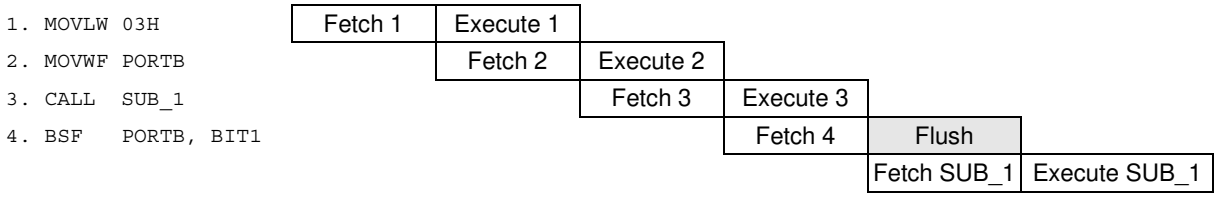

All instructions are single cycle, except for any program branches. These take two cycles, since the fetch instruction is “flushed” from the pipeline, while the new instruction is being fetched and then executed.

© 2009 Microchip Technology Inc.

4.0 MEMORY ORGANIZATION

The PIC12F508/509/16F505 memories are organized into program memory and data memory. For devices with more than 512 bytes of program memory, a paging scheme is used. Program memory pages are accessed using one STATUS register bit. For the PIC12F509 and PIC16F505, with data memory register files of more than 32 registers, a banking scheme is used. Data memory banks are accessed using the File Select Register (FSR).

4.1 Program Memory Organization for the PIC12F508/509

The PIC12F508 device has a 10-bit Program Counter (PC) and PIC12F509 has a 11-bit Program Counter (PC) capable of addressing a 2K x 12 program memory space.

Only the first 512 x 12 (0000h-01FFh) for the PIC12F508, and 1K x 12 (0000h-03FFh) for the PIC12F509 are physically implemented (see Figure 4-1). Accessing a location above these boundaries will cause a wrap-around within the first 512 x 12 space (PIC12F508) or 1K x 12 space (PIC12F509). The effective Reset vector is a 0000h (see Figure 4-1). Location 01FFh (PIC12F508) and location 03FFh (PIC12F509) contain the internal clock oscillator calibration value. This value should never be overwritten.

FIGURE 4-1: PROGRAM MEMORY MAP AND STACK FOR THE PIC12F508/509

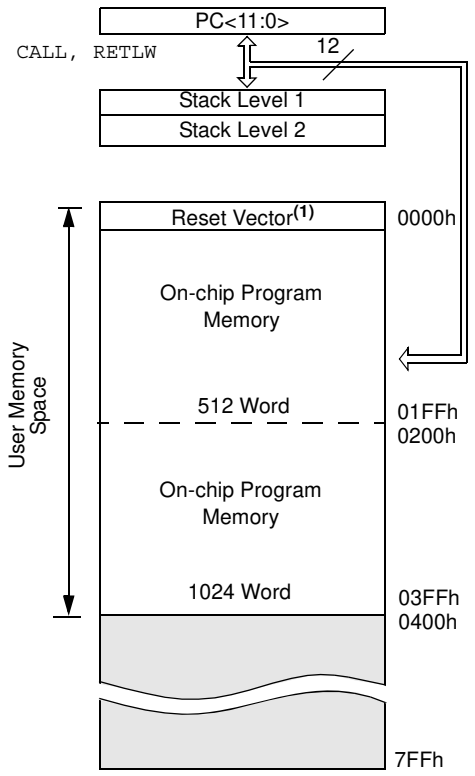

Note 1: Address 0000h becomes the effective Reset vector. Location 01FFh, 03FFh (PIC12F508, PIC12F509) contains the `MOVLW XX` internal oscillator calibration value.

4.2 Program Memory Organization For The PIC16F505

The PIC16F505 device has a 11-bit Program Counter (PC) capable of addressing a 2K x 12 program memory space.

The 1K x 12 (0000h-03FFh) for the PIC16F505 are physically implemented. Refer to Figure 4-2. Accessing a location above this boundary will cause a wrap-around within the first 1K x 12 space. The effective Reset vector is at 0000h (see Figure 4-2). Location 03FFh contains the internal oscillator calibration value. This value should never be overwritten.

FIGURE 4-2: PROGRAM MEMORY MAP AND STACK FOR THE PIC16F505

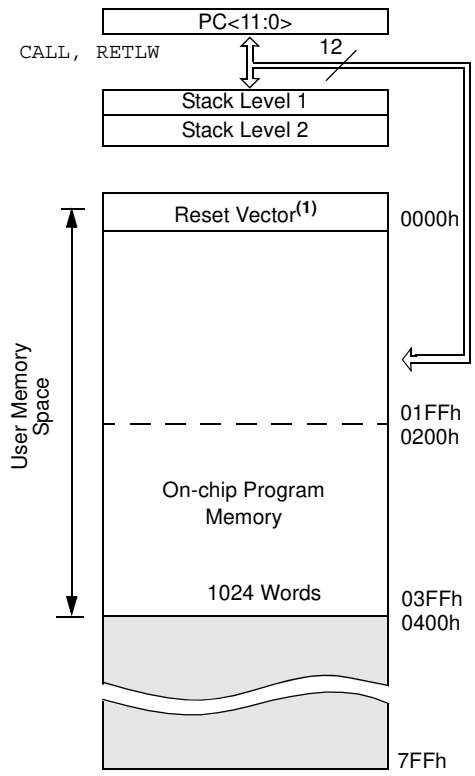

Note 1: Address 0000h becomes the effective Reset vector. Location 03FFh contains the `MOVLW XX` internal oscillator calibration value.

4.3 Data Memory Organization

Data memory is composed of registers or bytes of RAM. Therefore, data memory for a device is specified by its register file. The register file is divided into two functional groups: Special Function Registers (SFR) and General Purpose Registers (GPR).

The Special Function Registers include the TMR0 register, the Program Counter (PCL), the STATUS register, the I/O registers (ports) and the File Select Register (FSR). In addition, Special Function Registers are used to control the I/O port configuration and prescaler options.

The General Purpose Registers are used for data and control information under command of the instructions.

For the PIC12F508/509, the register file is composed of 7 Special Function Registers, 9 General Purpose Registers and 16 or 32 General Purpose Registers accessed by banking (see Figure 4-3 and Figure 4-4).

For the PIC16F505, the register file is composed of 8 Special Function Registers, 8 General Purpose Registers and 64 General Purpose Registers accessed by banking (Figure 4-5).

4.3.1 GENERAL PURPOSE REGISTER FILE

The General Purpose Register file is accessed, either directly or indirectly, through the File Select Register (FSR). See **Section 4.9 “Indirect Data Addressing: INDF and FSR Registers”**.

© 2009 Microchip Technology Inc.

FIGURE 4-3: PIC12F508 REGISTER FILE MAP

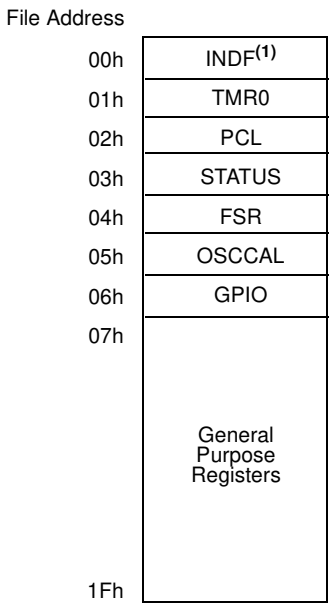

Note 1: Not a physical register. See **Section 4.9 "Indirect Data Addressing: INDF and FSR Registers"**.

FIGURE 4-4: PIC12F509 REGISTER FILE MAP

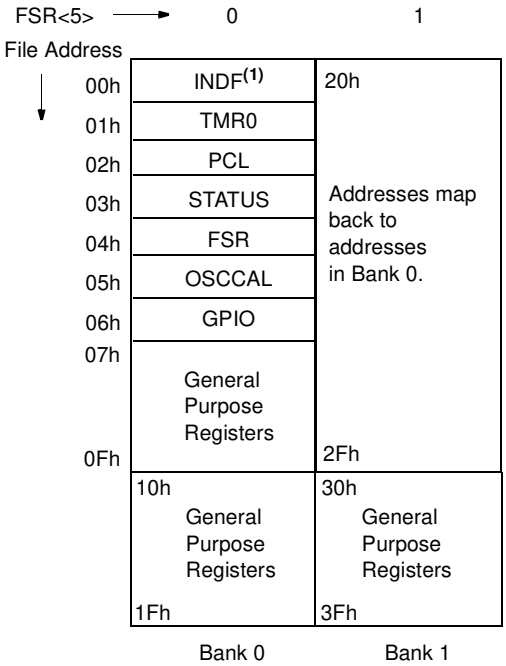

Note 1: Not a physical register. See **Section 4.9 "Indirect Data Addressing: INDF and FSR Registers"**.

FIGURE 4-5: PIC16F505 REGISTER FILE MAP

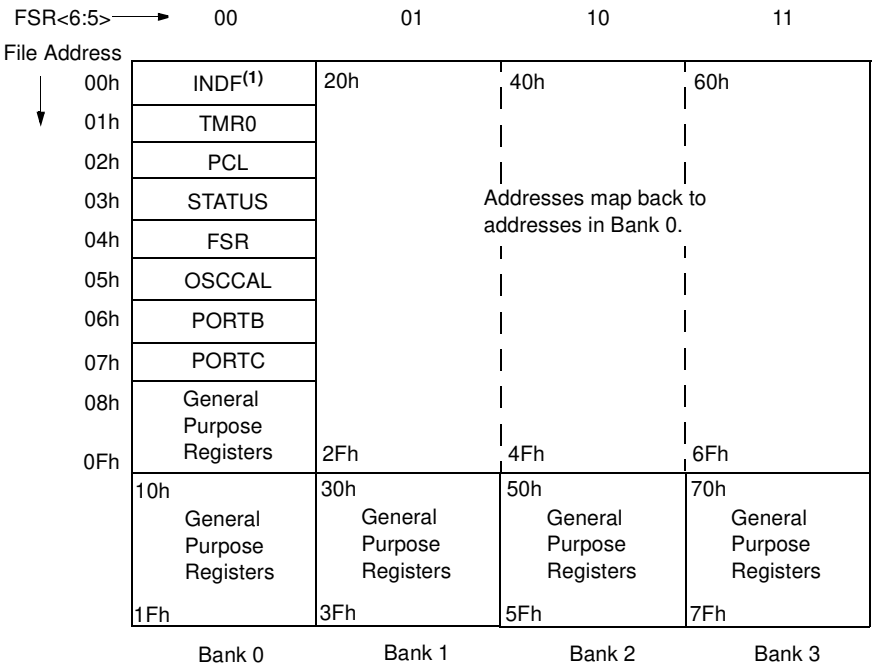

Note 1: Not a physical register. See **Section 4.9 "Indirect Data Addressing: INDF and FSR Registers"**.

4.3.2 SPECIAL FUNCTION REGISTERS

The Special Function Registers (SFRs) are registers used by the CPU and peripheral functions to control the operation of the device (Table 4-1).

The Special Function Registers can be classified into two sets. The Special Function Registers associated with the “core” functions are described in this section. Those related to the operation of the peripheral features are described in the section for each peripheral feature.

TABLE 4-1: SPECIAL FUNCTION REGISTER (SFR) SUMMARY (PIC12F508/509)

Address	Name	Bit 7	Bit 6	Bit 5	Bit 4	Bit 3	Bit 2	Bit 1	Bit 0	Value on Power-On Reset(2)	Page #
00h	INDF	Uses Contents of FSR to Address Data Memory (not a physical register)								xxxx xxxx	28
01h	TMR0	8-bit Real-Time Clock/Counter								xxxx xxxx	35
02h(1)	PCL	Low-order 8 bits of PC								1111 1111	27
03h	STATUS	GPWUF	—	PA0(5)	$\overline{TO}$	$\overline{PD}$	Z	DC	C	0-01 1xxx(3)	22
04h	FSR	Indirect Data Memory Address Pointer								111x xxxx	28
04h(4)	FSR	Indirect Data Memory Address Pointer								110x xxxx	28
05h	OSCCAL	CAL6	CAL5	CAL4	CAL3	CAL2	CAL1	CAL0	—	1111 111-	26
06h	GPIO	—	—	GP5	GP4	GP3	GP2	GP1	GP0	--xx xxxx	31
N/A	TRISGPIO	—	—	I/O Control Register						--11 1111	31
N/A	OPTION	$\overline{GPWU}$	$\overline{GPPU}$	TOCS	TOSE	PSA	PS2	PS1	PS0	1111 1111	24

Legend: – = unimplemented, read as ‘0’, x = unknown, u = unchanged, q = value depends on condition.

Note 1: The upper byte of the Program Counter is not directly accessible. See **Section 4.7 “Program Counter”** for an explanation of how to access these bits.

2: Other (non Power-up) Resets include external Reset through $\overline{MCLR}$, Watchdog Timer and wake-up on pin change Reset.

3: If Reset was due to wake-up on pin change, then bit 7 = 1. All other Resets will cause bit 7 = 0.

4: PIC12F509 only.

5: This bit is used on the PIC12F509. For code compatibility do not use this bit on the PIC12F508.

© 2009 Microchip Technology Inc.

TABLE 4-2: SPECIAL FUNCTION REGISTER (SFR) SUMMARY (PIC16F505)

Address	Name	Bit 7	Bit 6	Bit 5	Bit 4	Bit 3	Bit 2	Bit 1	Bit 0	Value on Power-On Reset(2)	Page #
00h	INDF	Uses Contents of FSR to Address Data Memory (not a physical register)								xxxx xxxx	28
01h	TMR0	8-bit Real-Time Clock/Counter								xxxx xxxx	35
02h(1)	PCL	Low-order 8 bits of PC								1111 1111	27
03h	STATUS	RBWUF	—	PA0	$\overline{TO}$	$\overline{PD}$	Z	DC	C	0-01 1xxx	22
04h	FSR	Indirect Data Memory Address Pointer								100x xxxx	28
05h	OSCCAL	CAL6	CAL5	CAL4	CAL3	CAL2	CAL1	CAL0	—	1111 111-	26
06h	PORTB	—	—	RB5	RB4	RB3	RB2	RB1	RB0	--xx xxxx	31
07h	PORTC	—	—	RC5	RC4	RC3	RC2	RC1	RC0	--xx xxxx	31
N/A	TRISB	—	—	I/O Control Register						--11 1111	31
N/A	TRISC	—	—	I/O Control Register						--11 1111	31
N/A	OPTION	$\overline{RBWU}$	$\overline{RBPU}$	TOCS	TOSE	PSA	PS2	PS1	PS0	1111 1111	25

Legend: – = unimplemented, read as '0', x = unknown, u = unchanged, q = value depends on condition.

Note 1: If Reset was due to wake-up on pin change, then bit 7 = 1. All other Resets will cause bit 7 = 0.

2: Other (non Power-up) Resets include external reset through $\overline{MCLR}$, Watchdog Timer and wake-up on pin change Reset.

4.4 STATUS Register

This register contains the arithmetic status of the ALU, the Reset status and the page preselect bit.

The STATUS register can be the destination for any instruction, as with any other register. If the STATUS register is the destination for an instruction that affects the Z, DC or C bits, then the write to these three bits is disabled. These bits are set or cleared according to the device logic. Furthermore, the $\overline{TO}$ and $\overline{PD}$ bits are not writable. Therefore, the result of an instruction with the STATUS register as destination may be different than intended.

For example, `CLRF STATUS,` will clear the upper three bits and set the Z bit. This leaves the STATUS register as `000u u1uu` (where `u` = unchanged).

Therefore, it is recommended that only `BCF`, `BSF` and `MOVWF` instructions be used to alter the STATUS register. These instructions do not affect the Z, DC or C bits from the STATUS register. For other instructions which do affect Status bits, see **Section 8.0 "Instruction Set Summary"**.

REGISTER 4-1: STATUS REGISTER (ADDRESS: 03h) (PIC12F508/509)

R/W-0	R/W-0	R/W-0	R-1	R-1	R/W-x	R/W-x	R/W-x
GPWUF	—	PA0	$\overline{TO}$	$\overline{PD}$	Z	DC	C
bit 7							bit 0

Legend:			
R = Readable bit	W = Writable bit	U = Unimplemented bit, read as '0'	
-n = Value at POR	'1' = Bit is set	'0' = Bit is cleared	x = Bit is unknown

bit 7 **GPWUF:** GPIO Reset bit
`1` = Reset due to wake-up from Sleep on pin change
`0` = After power-up or other Reset

bit 6 **Reserved**: Do not use

bit 5 **PA0**: Program Page Preselect bits(1)
`1` = Page 1 (200h-3FFh)
`0` = Page 0 (000h-1FFh)
Each page is 512 bytes.
Using the PA0 bit as a general purpose read/write bit in devices which do not use it for program page preselect is not recommended, since this may affect upward compatibility with future products.

bit 4 **$\overline{TO}$**: Time-Out bit
`1` = After power-up, `CLRWDT` instruction, or `SLEEP` instruction
`0` = A WDT time-out occurred

bit 3 **$\overline{PD}$**: Power-Down bit
`1` = After power-up or by the `CLRWDT` instruction
`0` = By execution of the `SLEEP` instruction

bit 2 **Z**: Zero bit
`1` = The result of an arithmetic or logic operation is zero
`0` = The result of an arithmetic or logic operation is not zero

bit 1 **DC**: Digit Carry/$\overline{\text{Borrow}}$ bit (for `ADDWF` and `SUBWF` instructions)
`ADDWF:`
`1` = A carry from the 4th low-order bit of the result occurred
`0` = A carry from the 4th low-order bit of the result did not occur
`SUBWF:`
`1` = A borrow from the 4th low-order bit of the result did not occur
`0` = A borrow from the 4th low-order bit of the result occurred

bit 0 **C**: Carry/$\overline{\text{Borrow}}$ bit (for `ADDWF`, `SUBWF` and `RRF`, `RLF` instructions)

`ADDWF:`	`SUBWF:`	`RRF` or `RLF:`
`1` = A carry occurred	`1` = A borrow did not occur	Load bit with LSb or MSb, respectively
`0` = A carry did not occur	`0` = A borrow occurred	

Note 1: This bit is used on the PIC12F509. For code compatibility do not use this bit on the PIC12F508.

© 2009 Microchip Technology Inc.

REGISTER 4-2: STATUS REGISTER (ADDRESS: 03h) (PIC16F505)

R/W-0	R/W-0	R/W-0	R-1	R-1	R/W-x	R/W-x	R/W-x
RBWUF	—	PA0	$\overline{TO}$	$\overline{PD}$	Z	DC	C
bit 7							bit 0

Legend:			
R = Readable bit	W = Writable bit	U = Unimplemented bit, read as ‘0’	
-n = Value at POR	‘1’ = Bit is set	‘0’ = Bit is cleared	x = Bit is unknown

bit 7 **RBWUF:** PORTB Reset bit
1 = Reset due to wake-up from Sleep on pin change
0 = After power-up or other Reset

bit 6 **Reserved**: Do not use

bit 5 **PA0**: Program Page Preselect bits
1 = Page 1 (200h-3FFh)
0 = Page 0 (000h-1FFh)
Each page is 512 bytes.
Using the PA0 bit as a general purpose read/write bit in devices which do not use it for program page preselect is not recommended, since this may affect upward compatibility with future products.

bit 4 **$\overline{TO}$**: Time-Out bit
1 = After power-up, CLRWDT instruction, or SLEEP instruction
0 = A WDT time-out occurred

bit 3 **$\overline{PD}$**: Power-Down bit
1 = After power-up or by the CLRWDT instruction
0 = By execution of the SLEEP instruction

bit 2 **Z**: Zero bit
1 = The result of an arithmetic or logic operation is zero
0 = The result of an arithmetic or logic operation is not zero

bit 1 **DC**: Digit Carry/$\overline{\text{Borrow}}$ bit (for ADDWF and SUBWF instructions)
ADDWF:
1 = A carry from the 4th low-order bit of the result occurred
0 = A carry from the 4th low-order bit of the result did not occur
SUBWF:
1 = A borrow from the 4th low-order bit of the result did not occur
0 = A borrow from the 4th low-order bit of the result occurred

bit 0 **C**: Carry/$\overline{\text{Borrow}}$ bit (for ADDWF, SUBWF and RRF, RLF instructions)

ADDWF:	SUBWF:	RRF or RLF:
1 = A carry occurred	1 = A borrow did not occur	Load bit with LSb or MSb, respectively
0 = A carry did not occur	0 = A borrow occurred	

4.5 OPTION Register

The OPTION register is a 8-bit wide, write-only register, which contains various control bits to configure the Timer0/WDT prescaler and Timer0.

By executing the `OPTION` instruction, the contents of the W register will be transferred to the OPTION register. A Reset sets the OPTION<7:0> bits.

> **Note:** If TRIS bit is set to '0', the wake-up on change and pull-up functions are disabled for that pin (i.e., note that TRIS overrides Option control of $\overline{\text{GPPU}}$/$\overline{\text{RBPU}}$ and $\overline{\text{GPWU}}$/$\overline{\text{RBWU}}$).

> **Note:** If the T0CS bit is set to '1', it will override the TRIS function on the T0CKI pin.

REGISTER 4-3: OPTION REGISTER (PIC12F508/509)

W-1	W-1	W-1	W-1	W-1	W-1	W-1	W-1
$\overline{\text{GPWU}}$	$\overline{\text{GPPU}}$	T0CS	T0SE	PSA	PS2	PS1	PS0
bit 7							bit 0

Legend:			
R = Readable bit	W = Writable bit	U = Unimplemented bit, read as '0'	
-n = Value at POR	'1' = Bit is set	'0' = Bit is cleared	x = Bit is unknown

bit 7 **$\overline{\text{GPWU}}$:** Enable Wake-up on Pin Change bit (GP0, GP1, GP3)
`1` = Disabled
`0` = Enabled

bit 6 **$\overline{\text{GPPU}}$**: Enable Weak Pull-ups bit (GP0, GP1, GP3)
`1` = Disabled
`0` = Enabled

bit 5 **T0CS**: Timer0 Clock Source Select bit
`1` = Transition on T0CKI pin (overrides TRIS on the T0CKI pin)
`0` = Transition on internal instruction cycle clock, FOSC/4

bit 4 **T0SE**: Timer0 Source Edge Select bit
`1` = Increment on high-to-low transition on the T0CKI pin
`0` = Increment on low-to-high transition on the T0CKI pin

bit 3 **PSA**: Prescaler Assignment bit
`1` = Prescaler assigned to the WDT
`0` = Prescaler assigned to Timer0

bit 2-0 **PS<2:0>:** Prescaler Rate Select bits

Bit Value	Timer0 Rate	WDT Rate
000	1 : 2	1 : 1
001	1 : 4	1 : 2
010	1 : 8	1 : 4
011	1 : 16	1 : 8
100	1 : 32	1 : 16
101	1 : 64	1 : 32
110	1 : 128	1 : 64
111	1 : 256	1 : 128

© 2009 Microchip Technology Inc.

REGISTER 4-4: OPTION REGISTER (PIC16F505)

W-1	W-1	W-1	W-1	W-1	W-1	W-1	W-1
$\overline{\text{RBWU}}$	$\overline{\text{RBPU}}$	T0CS	T0SE	PSA	PS2	PS1	PS0
bit 7							bit 0

Legend:			
R = Readable bit	W = Writable bit	U = Unimplemented bit, read as ‘0’	
-n = Value at POR	‘1’ = Bit is set	‘0’ = Bit is cleared	x = Bit is unknown

bit 7 **$\overline{\text{RBWU}}$:** Enable Wake-up on Pin Change bit (RB0, RB1, RB3, RB4)
1 = Disabled
0 = Enabled

bit 6 **$\overline{\text{RBPU}}$**: Enable Weak Pull-ups bit (RB0, RB1, RB3, RB4)
1 = Disabled
0 = Enabled

bit 5 **T0CS**: Timer0 clock Source Select bit
1 = Transition on T0CKI pin (overrides TRIS on the T0CKI pin)
0 = Transition on internal instruction cycle clock, FOSC/4

bit 4 **T0SE**: Timer0 Source Edge Select bit
1 = Increment on high-to-low transition on the T0CKI pin
0 = Increment on low-to-high transition on the T0CKI pin

bit 3 **PSA**: Prescaler Assignment bit
1 = Prescaler assigned to the WDT
0 = Prescaler assigned to Timer0

bit 2-0 **PS<2:0>:** Prescaler Rate Select bits

Bit Value	Timer0 Rate	WDT Rate
000	1 : 2	1 : 1
001	1 : 4	1 : 2
010	1 : 8	1 : 4
011	1 : 16	1 : 8
100	1 : 32	1 : 16
101	1 : 64	1 : 32
110	1 : 128	1 : 64
111	1 : 256	1 : 128

4.6 OSCCAL Register

The Oscillator Calibration (OSCCAL) register is used to calibrate the internal precision 4 MHz oscillator. It contains seven bits for calibration.

> **Note:** Erasing the device will also erase the pre-programmed internal calibration value for the internal oscillator. The calibration value must be read prior to erasing the part so it can be reprogrammed correctly later.

After you move in the calibration constant, do not change the value. See **Section 7.2.5 "Internal 4 MHz RC Oscillator"**.

REGISTER 4-5: OSCCAL REGISTER (ADDRESS: 05h)

R/W-1	R/W-1	R/W-1	R/W-1	R/W-1	R/W-1	R/W-1	R/W-0
CAL6	CAL5	CAL4	CAL3	CAL2	CAL1	CAL0	—
bit 7							bit 0

Legend:			
R = Readable bit	W = Writable bit	U = Unimplemented bit, read as '0'	
-n = Value at POR	'1' = Bit is set	'0' = Bit is cleared	x = Bit is unknown

bit 7-1 **CAL<6:0>:** Oscillator Calibration bits
`0111111` = Maximum frequency
•
•
•
`0000001`
`0000000` = Center frequency
`1111111`
•
•
•
`1000000` = Minimum frequency

bit 0 **Unimplemented**: Read as '0'

© 2009 Microchip Technology Inc.

4.7 Program Counter

As a program instruction is executed, the Program Counter (PC) will contain the address of the next program instruction to be executed. The PC value is increased by one every instruction cycle, unless an instruction changes the PC.

For a `GOTO` instruction, bits 8:0 of the PC are provided by the `GOTO` instruction word. The Program Counter (PCL) is mapped to PC<7:0>. Bit 5 of the STATUS register provides page information to bit 9 of the PC (Figure 4-6).

For a `CALL` instruction, or any instruction where the PCL is the destination, bits 7:0 of the PC again are provided by the instruction word. However, PC<8> does not come from the instruction word, but is always cleared (Figure 4-6).

Instructions where the PCL is the destination, or modify PCL instructions, include `MOVWF PC`, `ADDWF PC` and `BSF PC,5`.

Note:	Because PC<8> is cleared in the `CALL` instruction or any modify PCL instruction, all subroutine calls or computed jumps are limited to the first 256 locations of any program memory page (512 words long).

FIGURE 4-6: LOADING OF PC BRANCH INSTRUCTIONS

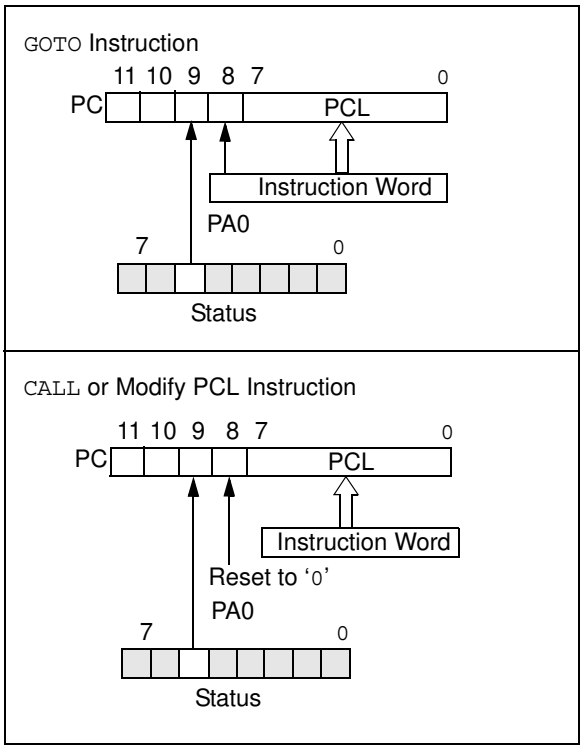

4.7.1 EFFECTS OF RESET

The PC is set upon a Reset, which means that the PC addresses the last location in the last page (i.e., the oscillator calibration instruction). After executing `MOVLW XX`, the PC will roll over to location 00h and begin executing user code.

The STATUS register page preselect bits are cleared upon a Reset, which means that page 0 is pre-selected.

Therefore, upon a Reset, a `GOTO` instruction will automatically cause the program to jump to page 0 until the value of the page bits is altered.

4.8 Stack

The PIC12F508/509/16F505 devices have a 2-deep, 12-bit wide hardware PUSH/POP stack.

A `CALL` instruction will PUSH the current value of Stack 1 into Stack 2 and then PUSH the current PC value, incremented by one, into Stack Level 1. If more than two sequential `CALL`s are executed, only the most recent two return addresses are stored.

A `RETLW` instruction will POP the contents of Stack Level 1 into the PC and then copy Stack Level 2 contents into Stack Level 1. If more than two sequential `RETLW`s are executed, the stack will be filled with the address previously stored in Stack Level 2. Note that the W register will be loaded with the literal value specified in the instruction. This is particularly useful for the implementation of data look-up tables within the program memory.

Note 1:	There are no Status bits to indicate stack overflows or stack underflow conditions.
2:	There are no instruction mnemonics called PUSH or POP. These are actions that occur from the execution of the `CALL` and `RETLW` instructions.

4.9 Indirect Data Addressing: INDF and FSR Registers

The INDF register is not a physical register. Addressing INDF actually addresses the register whose address is contained in the FSR register (FSR is a *pointer*). This is indirect addressing.

4.9.1 INDIRECT ADDRESSING

- Register file 07 contains the value 10h
- Register file 08 contains the value 0Ah
- Load the value 07 into the FSR register
- A read of the INDF register will return the value of 10h
- Increment the value of the FSR register by one (FSR = 08)
- A read of the INDR register now will return the value of 0Ah.

Reading INDF itself indirectly (FSR = `0`) will produce 00h. Writing to the INDF register indirectly results in a no operation (although Status bits may be affected).

A simple program to clear RAM locations 10h-1Fh using indirect addressing is shown in Example 4-1.

EXAMPLE 4-1: HOW TO CLEAR RAM USING INDIRECT ADDRESSING

```
        MOVLW   0x10    ;initialize pointer
        MOVWF   FSR     ;to RAM
NEXT    CLRF    INDF    ;clear INDF
                        ;register
        INCF    FSR,F   ;inc pointer
        BTFSC   FSR,4   ;all done?
        GOTO    NEXT    ;NO, clear next
CONTINUE
            :           ;YES, continue
            :
```

The FSR is a 5-bit wide register. It is used in conjunction with the INDF register to indirectly address the data memory area.

The FSR<4:0> bits are used to select data memory addresses 00h to 1Fh.

PIC12F508 – Does not use banking. FSR <7:5> are unimplemented and read as '`1`'s.

PIC12F509 – Uses FSR<5>. Selects between bank 0 and bank 1. FSR<7:6> are unimplemented, read as '`1`'.

PIC16F505 – Uses FSR<6:5>. Selects from bank 0 to bank 3. FSR<7> is unimplemented, read as '`1`'.

FIGURE 4-7: DIRECT/INDIRECT ADDRESSING (PIC12F508/509)

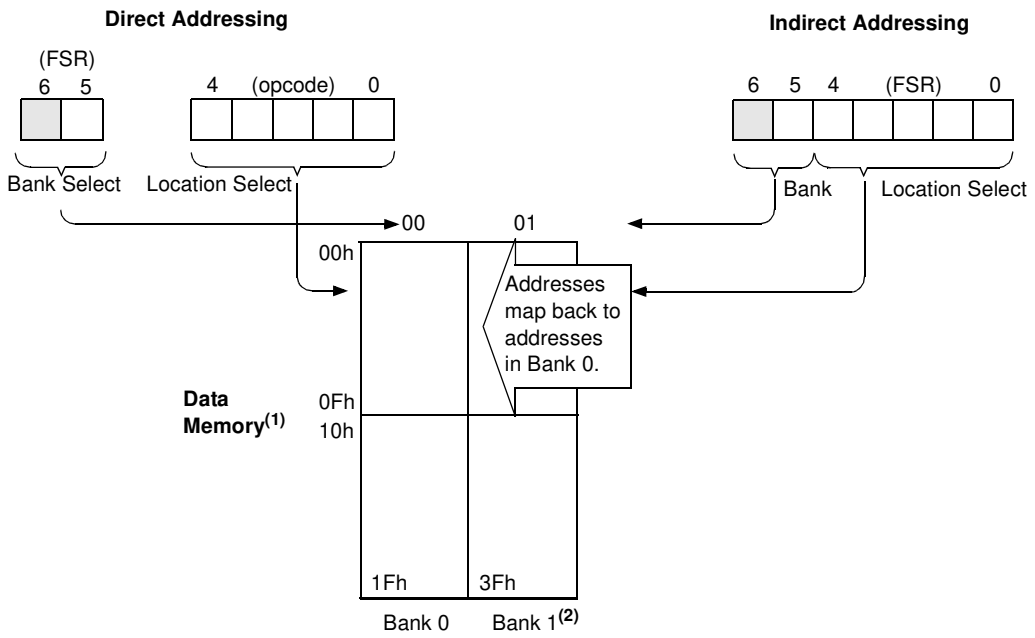

Note 1: For register map detail, see **Section 4.3 "Data Memory Organization"**.

2: PIC12F509.

© 2009 Microchip Technology Inc.

FIGURE 4-8: DIRECT/INDIRECT ADDRESSING (PIC16F505)

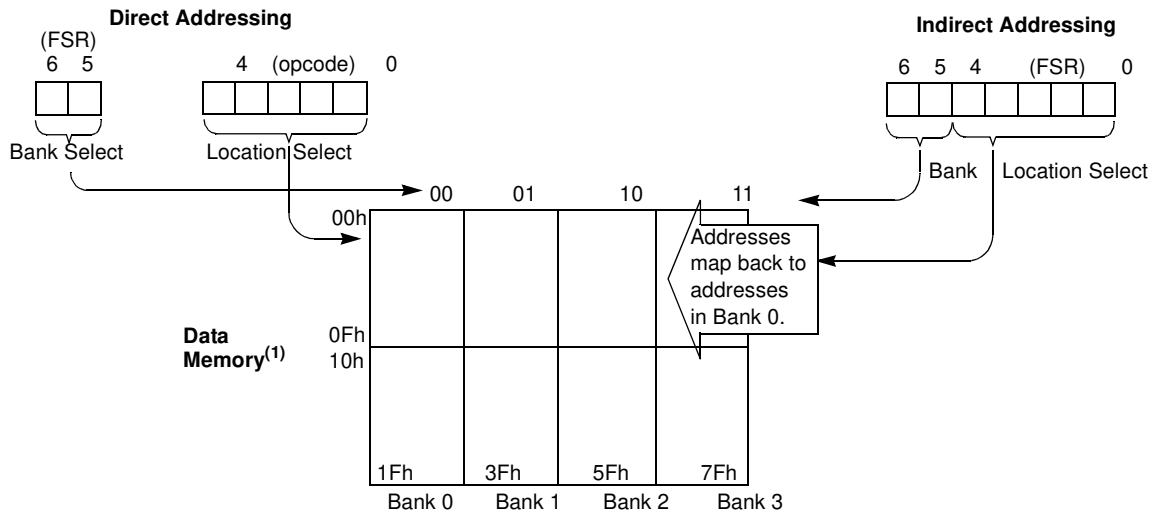

Note 1: For register map detail, see **Section 4.3 "Data Memory Organization"**.

NOTES:

© 2009 Microchip Technology Inc.

5.0 I/O PORT

As with any other register, the I/O register(s) can be written and read under program control. However, read instructions (e.g., `MOVF PORTB,W`) always read the I/O pins independent of the pin's Input/Output modes. On Reset, all I/O ports are defined as input (inputs are at high-impedance) since the I/O control registers are all set.

Note:	On the PIC12F508/509, I/O PORTB is referenced as GPIO. On the PIC16F505, I/O PORTB is referenced as PORTB.

5.1 PORTB/GPIO

PORTB/GPIO is an 8-bit I/O register. Only the low-order 6 bits are used (RB/GP<5:0>). Bits 7 and 6 are unimplemented and read as '0's. Please note that RB3/GP3 is an input only pin. The Configuration Word can set several I/O's to alternate functions. When acting as alternate functions, the pins will read as '0' during a port read. Pins RB0/GP0, RB1/GP1, RB3/GP3 and RB4 can be configured with weak pull-ups and also for wake-up on change. The wake-up on change and weak pull-up functions are not pin selectable. If RB3/GP3/$\overline{\text{MCLR}}$ is configured as $\overline{\text{MCLR}}$, weak pull-up is always on and wake-up on change for this pin is not enabled.

5.2 PORTC (PIC16F505 Only)

PORTC is an 8-bit I/O register. Only the low-order 6 bits are used (RC<5:0>). Bits 7 and 6 are unimplemented and read as '0's.

Note:	On power-up, TOCKI functionality is enabled in the OPTION register and must be disabled to allow RC5 to be used as general purpose I/O.

5.3 TRIS Registers

The Output Driver Control register is loaded with the contents of the W register by executing the `TRIS f` instruction. A '1' from a TRIS register bit puts the corresponding output driver in a High-Impedance mode. A '0' puts the contents of the output data latch on the selected pins, enabling the output buffer. The exceptions are RB3/GP3, which is input only and the T0CKI pin, which may be controlled by the OPTION register. See Register 4-3 and Register 4-4.

Note:	A read of the ports reads the pins, not the output data latches. That is, if an output driver on a pin is enabled and driven high, but the external system is holding it low, a read of the port will indicate that the pin is low.

The TRIS registers are "write-only" and are set (output drivers disabled) upon Reset.

5.4 I/O Interfacing

The equivalent circuit for an I/O port pin is shown in Figure 5-2. All port pins, except RB3/GP3 which is input only, may be used for both input and output operations. For input operations, these ports are non-latching. Any input must be present until read by an input instruction (e.g., `MOVF PORTB, W`). The outputs are latched and remain unchanged until the output latch is rewritten. To use a port pin as output, the corresponding direction control bit in TRIS must be cleared (= `0`). For use as an input, the corresponding TRIS bit must be set. Any I/O pin (except RB3/GP3) can be programmed individually as input or output.

FIGURE 5-1: PIC12F508/509/16F505 EQUIVALENT CIRCUIT FOR A SINGLE I/O PIN

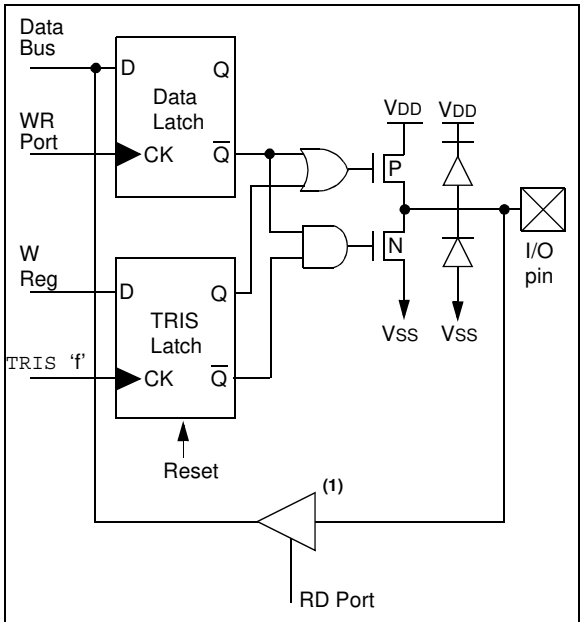

Note 1: See Table 3-3 for buffer type.

TABLE 5-1: SUMMARY OF PORT REGISTERS

Address	Name	Bit 7	Bit 6	Bit 5	Bit 4	Bit 3	Bit 2	Bit 1	Bit 0	Value on Power-On Reset	Value on All Other Resets
N/A	TRISGPIO(1)	—	—	I/O Control Register						--11 1111	--11 1111
N/A	TRISB(2)	—	—	I/O Control Register						--11 1111	--11 1111
N/A	TRISC(2)	—	—	I/O Control Register						--11 1111	--11 1111
N/A	OPTION(1)	$\overline{\text{GPWU}}$	$\overline{\text{GPPU}}$	TOCS	TOSE	PSA	PS2	PS1	PS0	1111 1111	1111 1111
N/A	OPTION(2)	$\overline{\text{RBWU}}$	$\overline{\text{RBPU}}$	TOCS	TOSE	PSA	PS2	PS1	PS0	1111 1111	1111 1111
03h	STATUS(1)	GPWUF	—	PAO	$\overline{\text{TO}}$	$\overline{\text{PD}}$	Z	DC	C	0-01 1xxx	q00q quuu(3)
03h	STATUS(2)	RBWUF	—	PAO	$\overline{\text{TO}}$	$\overline{\text{PD}}$	Z	DC	C	0-01 1xxx	q00q quuu(3)
06h	GPIO(1)	—	—	GP5	GP4	GP3	GP2	GP1	GP0	--xx xxxx	--uu uuuu
06h	PORTB(2)	—	—	RB5	RB4	RB3	RB2	RB1	RB0	--xx xxxx	--uu uuuu
07h	PORTC(2)	—	—	RC5	RC4	RC3	RC2	RC1	RC0	--xx xxxx	--uu uuuu

Legend: Shaded cells are not used by Port registers, read as '0'. – = unimplemented, read as '0', x = unknown, u = unchanged, q = depends on condition.

Note 1: PIC12F508/509 only.

2: PIC16F505 only.

3: If Reset was due to wake-up on pin change, then bit 7 = 1. All other Resets will cause bit 7 = 0.

© 2009 Microchip Technology Inc.

5.5 I/O Programming Considerations

5.5.1 BIDIRECTIONAL I/O PORTS

Some instructions operate internally as read followed by write operations. The BCF and BSF instructions, for example, read the entire port into the CPU, execute the bit operation and re-write the result. Caution must be used when these instructions are applied to a port where one or more pins are used as input/outputs. For example, a BSF operation on bit 5 of PORTB/GPIO will cause all eight bits of PORTB/GPIO to be read into the CPU, bit 5 to be set and the PORTB/GPIO value to be written to the output latches. If another bit of PORTB/GPIO is used as a bidirectional I/O pin (say bit 0) and it is defined as an input at this time, the input signal present on the pin itself would be read into the CPU and rewritten to the data latch of this particular pin, overwriting the previous content. As long as the pin stays in the Input mode, no problem occurs. However, if bit 0 is switched into Output mode later on, the content of the data latch may now be unknown.

Example 5-1 shows the effect of two sequential Read-Modify-Write instructions (e.g., BCF, BSF, etc.) on an I/O port.

A pin actively outputting a high or a low should not be driven from external devices at the same time in order to change the level on this pin ("wired OR", "wired AND"). The resulting high output currents may damage the chip.

EXAMPLE 5-1: READ-MODIFY-WRITE INSTRUCTIONS ON AN I/O PORT(e.g., PIC16F505)

```
;Initial PORTB Settings
;PORTB<5:3> Inputs
;PORTB<2:0> Outputs
;
;                  PORTB latch  PORTB pins
;                  ----------   ----------
 BCF    PORTB, 5 ;--01 -ppp    --11 pppp
 BCF    PORTB, 4 ;--10 -ppp    --11 pppp
 MOVLW  007h;
 TRIS   PORTB    ;--10 -ppp    --11 pppp
;
```

Note 1: The user may have expected the pin values to be '--00 pppp'. The 2nd BCF caused RB5 to be latched as the pin value (High).

5.5.2 SUCCESSIVE OPERATIONS ON I/O PORTS

The actual write to an I/O port happens at the end of an instruction cycle, whereas for reading, the data must be valid at the beginning of the instruction cycle (Figure 5-2). Therefore, care must be exercised if a write followed by a read operation is carried out on the same I/O port. The sequence of instructions should allow the pin voltage to stabilize (load dependent) before the next instruction causes that file to be read into the CPU. Otherwise, the previous state of that pin may be read into the CPU rather than the new state. When in doubt, it is better to separate these instructions with a NOP or another instruction not accessing this I/O port.

FIGURE 5-2: SUCCESSIVE I/O OPERATION (PIC16F505 Shown)

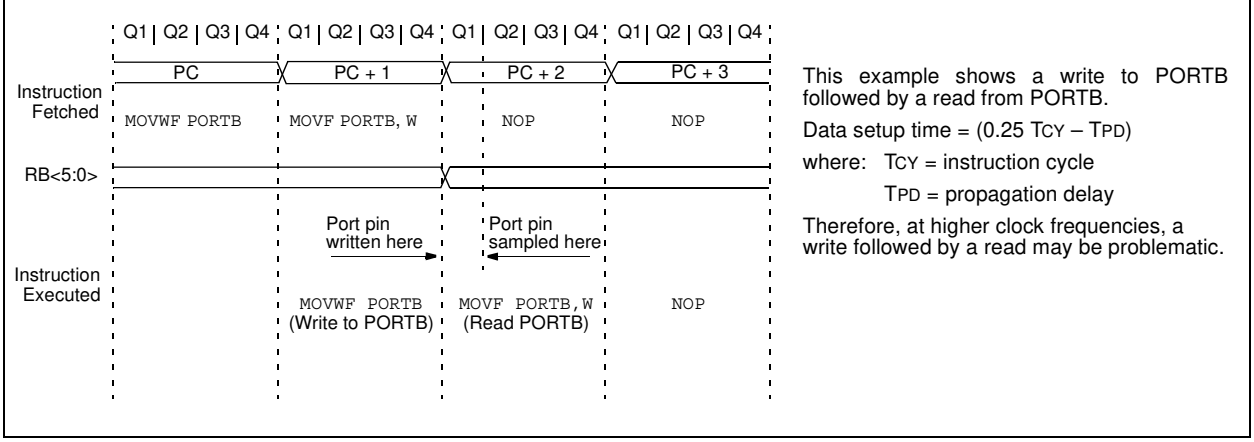

NOTES:

© 2009 Microchip Technology Inc.

6.0 TIMER0 MODULE AND TMR0 REGISTER

The Timer0 module has the following features:

- 8-bit timer/counter register, TMR0
- Readable and writable
- 8-bit software programmable prescaler
- Internal or external clock select:
  - Edge select for external clock

Figure 6-1 is a simplified block diagram of the Timer0 module.

Timer mode is selected by clearing the T0CS bit (OPTION<5>). In Timer mode, the Timer0 module will increment every instruction cycle (without prescaler). If TMR0 register is written, the increment is inhibited for the following two cycles (Figure 6-2 and Figure 6-3). The user can work around this by writing an adjusted value to the TMR0 register.

Counter mode is selected by setting the T0CS bit (OPTION<5>). In this mode, Timer0 will increment either on every rising or falling edge of pin T0CKI. The T0SE bit (OPTION<4>) determines the source edge. Clearing the T0SE bit selects the rising edge. Restrictions on the external clock input are discussed in detail in **Section 6.1 "Using Timer0 with an External Clock"**.

The prescaler may be used by either the Timer0 module or the Watchdog Timer, but not both. The prescaler assignment is controlled in software by the control bit, PSA (OPTION<3>). Clearing the PSA bit will assign the prescaler to Timer0. The prescaler is not readable or writable. When the prescaler is assigned to the Timer0 module, prescale values of 1:2, 1:4,..., 1:256 are selectable. **Section 6.2 "Prescaler"** details the operation of the prescaler.

A summary of registers associated with the Timer0 module is found in Table 6-1.

FIGURE 6-1: TIMER0 BLOCK DIAGRAM

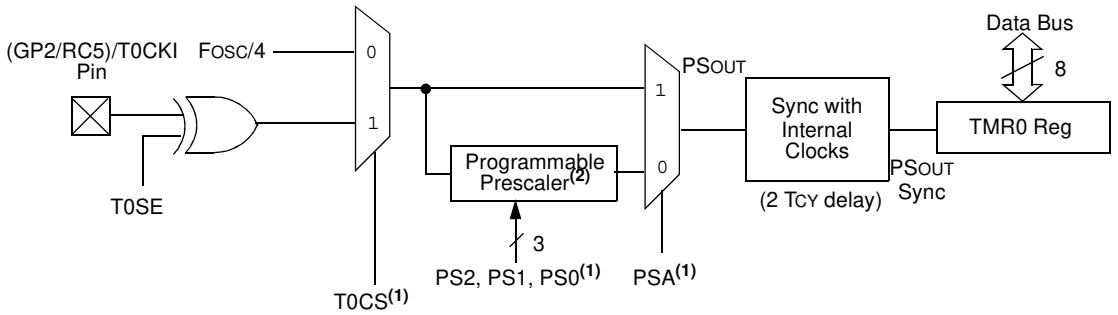

Note 1: Bits T0CS, T0SE, PSA, PS2, PS1 and PS0 are located in the OPTION register.

2: The prescaler is shared with the Watchdog Timer (Figure 6-5).

FIGURE 6-2: TIMER0 TIMING: INTERNAL CLOCK/NO PRESCALE

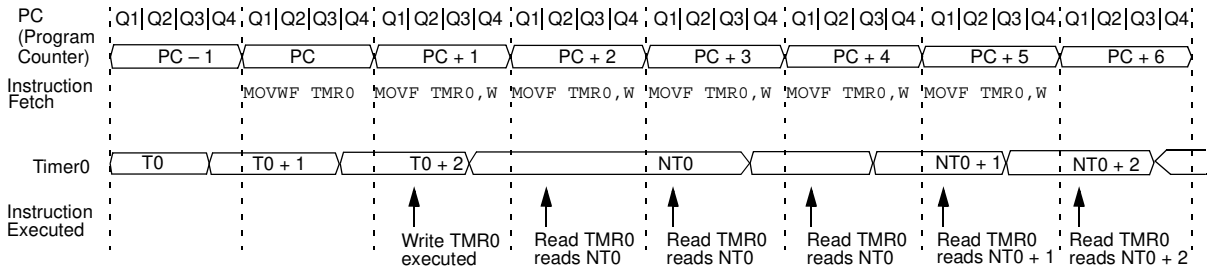

FIGURE 6-3: TIMER0 TIMING: INTERNAL CLOCK/PRESCALE 1:2

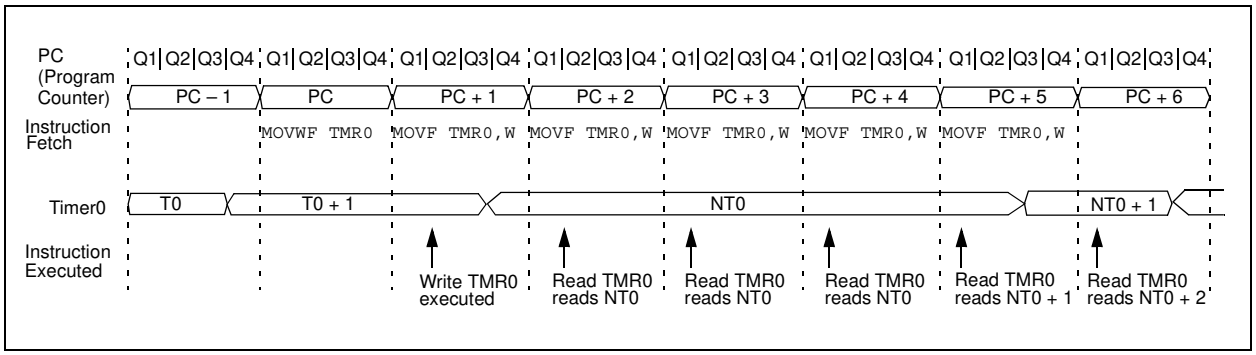

TABLE 6-1: REGISTERS ASSOCIATED WITH TIMER0

Address	Name	Bit 7	Bit 6	Bit 5	Bit 4	Bit 3	Bit 2	Bit 1	Bit 0	Value on Power-On Reset	Value on All Other Resets
01h	TMR0	Timer0 – 8-bit Real-Time Clock/Counter								xxxx xxxx	uuuu uuuu
N/A	OPTION(1)	$\overline{\text{GPWU}}$	$\overline{\text{GPPU}}$	T0CS	T0SE	PSA	PS2	PS1	PS0	1111 1111	1111 1111
N/A	OPTION(2)	$\overline{\text{RBWU}}$	$\overline{\text{RBPU}}$	T0CS	T0SE	PSA	PS2	PS1	PS0	1111 1111	1111 1111
N/A	TRISGPIO(1), (3)	—	—	I/O Control Register						--11 1111	--11 1111
N/A	TRISC(2), (3)	—	—	RC5	RC4	RC3	RC2	RC1	RC0	--11 1111	--11 1111

Legend: Shaded cells are not used by Timer0. – = unimplemented, x = unknown, u = unchanged.

Note 1: PIC12F508/509 only.

2: PIC16F505 only.

3: The TRIS of the T0CKI pin is overridden when T0CS = 1.

© 2009 Microchip Technology Inc.

6.1 Using Timer0 with an External Clock

When an external clock input is used for Timer0, it must meet certain requirements. The external clock requirement is due to internal phase clock (TOSC) synchronization. Also, there is a delay in the actual incrementing of Timer0 after synchronization.

6.1.1 EXTERNAL CLOCK SYNCHRONIZATION

When no prescaler is used, the external clock input is the same as the prescaler output. The synchronization of T0CKI with the internal phase clocks is accomplished by sampling the prescaler output on the Q2 and Q4 cycles of the internal phase clocks (Figure 6-4). Therefore, it is necessary for T0CKI to be high for at least 2 TOSC (and a small RC delay of 2 Tt0H) and low for at least 2 TOSC (and a small RC delay of 2 Tt0H). Refer to the electrical specification of the desired device.

When a prescaler is used, the external clock input is divided by the asynchronous ripple counter-type prescaler, so that the prescaler output is symmetrical. For the external clock to meet the sampling requirement, the ripple counter must be taken into account. Therefore, it is necessary for T0CKI to have a period of at least 4 TOSC (and a small RC delay of 4 Tt0H) divided by the prescaler value. The only requirement on T0CKI high and low time is that they do not violate the minimum pulse width requirement of Tt0H. Refer to parameters 40, 41 and 42 in the electrical specification of the desired device.

6.1.2 TIMER0 INCREMENT DELAY

Since the prescaler output is synchronized with the internal clocks, there is a small delay from the time the external clock edge occurs to the time the Timer0 module is actually incremented. Figure 6-4 shows the delay from the external clock edge to the timer incrementing.

FIGURE 6-4: TIMER0 TIMING WITH EXTERNAL CLOCK

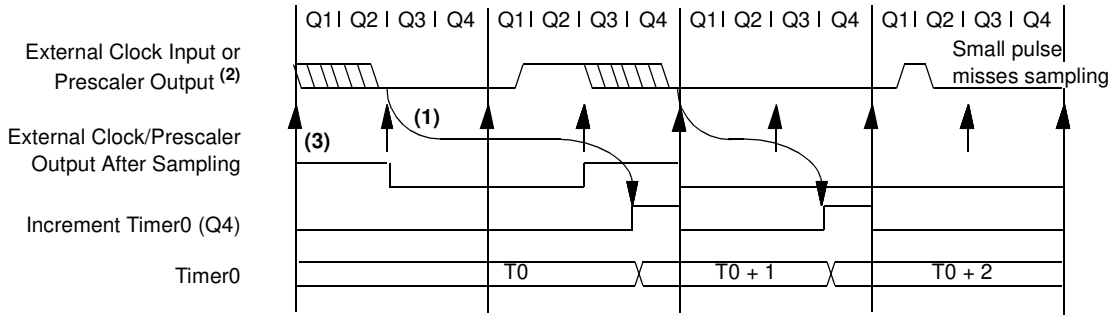

Note 1: Delay from clock input change to Timer0 increment is 3 TOSC to 7 TOSC. (Duration of Q = TOSC). Therefore, the error in measuring the interval between two edges on Timer0 input = ±4 TOSC max.

2: External clock if no prescaler selected; prescaler output otherwise.

3: The arrows indicate the points in time where sampling occurs.

6.2 Prescaler

An 8-bit counter is available as a prescaler for the Timer0 module or as a postscaler for the Watchdog Timer (WDT), respectively (see **Section 7.6 "Watchdog Timer (WDT)"**). For simplicity, this counter is being referred to as "prescaler" throughout this data sheet.

Note:	The prescaler may be used by either the Timer0 module or the WDT, but not both. Thus, a prescaler assignment for the Timer0 module means that there is no prescaler for the WDT and vice versa.

The PSA and PS<2:0> bits (OPTION<3:0>) determine prescaler assignment and prescale ratio.

When assigned to the Timer0 module, all instructions writing to the TMR0 register (e.g., `CLRF 1`, `MOVWF 1`, `BSF 1, x`, etc.) will clear the prescaler. When assigned to WDT, a `CLRWDT` instruction will clear the prescaler along with the WDT. The prescaler is neither readable nor writable. On a Reset, the prescaler contains all '0's.

6.2.1 SWITCHING PRESCALER ASSIGNMENT

The prescaler assignment is fully under software control (i.e., it can be changed "on-the-fly" during program execution). To avoid an unintended device Reset, the following instruction sequence (Example 6-1) must be executed when changing the prescaler assignment from Timer0 to the WDT.

EXAMPLE 6-1: CHANGING PRESCALER (TIMER0 → WDT)

```
CLRWDT              ;Clear WDT
CLRF   TMR0         ;Clear TMR0 & Prescaler
MOVLW  '00xx1111'b  ;These 3 lines (5, 6, 7)
OPTION              ;are required only if
                    ;desired
CLRWDT              ;PS<2:0> are 000 or 001
MOVLW  '00xx1xxx'b  ;Set Postscaler to
OPTION              ;desired WDT rate
```

To change the prescaler from the WDT to the Timer0 module, use the sequence shown in Example 6-2. This sequence must be used even if the WDT is disabled. A `CLRWDT` instruction should be executed before switching the prescaler.

EXAMPLE 6-2: CHANGING PRESCALER (WDT → TIMER0)

```
CLRWDT              ;Clear WDT and
                    ;prescaler
MOVLW  'xxxx0xxx'   ;Select TMR0, new
                    ;prescale value and
                    ;clock source
OPTION
```


© 2009 Microchip Technology Inc.

FIGURE 6-5: BLOCK DIAGRAM OF THE TIMER0/WDT PRESCALER(1), (2)

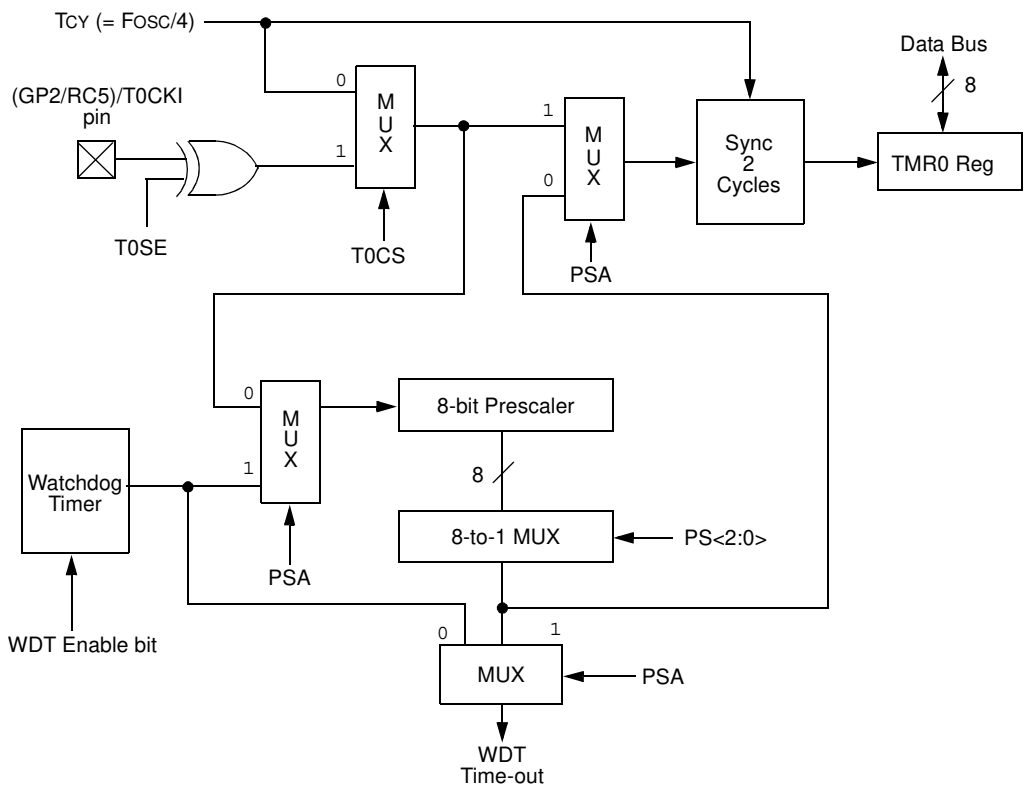

Note 1: T0CS, T0SE, PSA, PS<2:0> are bits in the OPTION register.

2: T0CKI is shared with pin RC5 on the PIC16F505 and pin GP2 on the PIC12F508/509.

NOTES:

© 2009 Microchip Technology Inc.

7.0 SPECIAL FEATURES OF THE CPU

What sets a microcontroller apart from other processors are special circuits that deal with the needs of real-time applications. The PIC12F508/509/16F505 microcontrollers have a host of such features intended to maximize system reliability, minimize cost through elimination of external components, provide power-saving operating modes and offer code protection. These features are:

- Oscillator Selection
- Reset:
  - Power-on Reset (POR)
  - Device Reset Timer (DRT)
  - Wake-up from Sleep on Pin Change
- Watchdog Timer (WDT)
- Sleep
- Code Protection
- ID Locations
- In-Circuit Serial Programming™
- Clock Out

The PIC12F508/509/16F505 devices have a Watchdog Timer, which can be shut off only through Configuration bit WDTE. It runs off of its own RC oscillator for added reliability. If using HS (PIC16F505), XT or LP selectable oscillator options, there is always an 18 ms (nominal) delay provided by the Device Reset Timer (DRT), intended to keep the chip in Reset until the crystal oscillator is stable. If using INTRC or EXTRC, there is an 18 ms delay only on V_{DD} power-up. With this timer on-chip, most applications need no external Reset circuitry.

The Sleep mode is designed to offer a very low-current Power-Down mode. The user can wake-up from Sleep through a change on input pins or through a Watchdog Timer time-out. Several oscillator options are also made available to allow the part to fit the application, including an internal 4 MHz oscillator. The EXTRC oscillator option saves system cost while the LP crystal option saves power. A set of Configuration bits are used to select various options.

7.1 Configuration Bits

The PIC12F508/509/16F505 Configuration Words consist of 12 bits. Configuration bits can be programmed to select various device configurations. Three bits are for the selection of the oscillator type; (two bits on the PIC12F508/509), one bit is the Watchdog Timer enable bit, one bit is the $\overline{MCLR}$ enable bit and one bit is for code protection (Register 7-1, Register 7-2).

REGISTER 7-1: CONFIGURATION WORD FOR PIC12F508/509(1)

—	—	—	—	—	—	—	MCLRE	$\overline{CP}$	WDTE	FOSC1	FOSC0
bit 11											bit 0

Legend:			
R = Readable bit	W = Writable bit	U = Unimplemented bit, read as ‘0’	
-n = Value at POR	‘1’ = Bit is set	‘0’ = Bit is cleared	x = Bit is unknown

bit 11-5 **Unimplemented**: Read as ‘0’

bit 4 **MCLRE:** GP3/$\overline{MCLR}$ Pin Function Select bit
1 = GP3/$\overline{MCLR}$ pin function is $\overline{MCLR}$
0 = GP3/$\overline{MCLR}$ pin function is digital input, $\overline{MCLR}$ internally tied to V_{DD}

bit 3 **$\overline{CP}$:** Code Protection bit
1 = Code protection off
0 = Code protection on

bit 2 **WDTE:** Watchdog Timer Enable bit
1 = WDT enabled
0 = WDT disabled

bit 1-0 **FOSC<1:0>:** Oscillator Selection bits
11 = EXTRC = external RC oscillator
10 = INTRC = internal RC oscillator
01 = XT oscillator
00 = LP oscillator

Note 1: Refer to the “*PIC12F508/509 Memory Programming Specifications*” (DS41227) to determine how to access the Configuration Word. The Configuration Word is not user addressable during device operation.

© 2009 Microchip Technology Inc.

REGISTER 7-2: CONFIGURATION WORD FOR PIC16F505[1]

—	—	—	—	—	—	MCLRE	$\overline{CP}$	WDTE	FOSC2	FOSC1	FOSC0
bit 11											bit 0

Legend:			
R = Readable bit	W = Writable bit	U = Unimplemented bit, read as ‘0’	
-n = Value at POR	‘1’ = Bit is set	‘0’ = Bit is cleared	x = Bit is unknown

bit 11-6 **Unimplemented**: Read as ‘0’

bit 5 **MCLRE:** RB3/$\overline{MCLR}$ Pin Function Select bit
1 = RB3/$\overline{MCLR}$ pin function is $\overline{MCLR}$
0 = RB3/$\overline{MCLR}$ pin function is digital input, $\overline{MCLR}$ internally tied to VDD

bit 4 **$\overline{CP}$:** Code Protection bit
1 = Code protection off
0 = Code protection on

bit 3 **WDTE:** Watchdog Timer Enable bit
1 = WDT enabled
0 = WDT disabled

bit 2-0 **FOSC<1:0>:** Oscillator Selection bits
111 = External RC oscillator/CLKOUT function on RB4/OSC2/CLKOUT pin
110 = External RC oscillator/RB4 function on RB4/OSC2/CLKOUT pin
101 = Internal RC oscillator/CLKOUT function on RB4/OSC2/CLKOUT pin
100 = Internal RC oscillator/RB4 function on RB4/OSC2/CLKOUT pin
011 = EC oscillator/RB4 function on RB4/OSC2/CLKOUT pin
010 = HS oscillator
001 = XT oscillator
000 = LP oscillator

Note 1: Refer to the “*PIC16F505 Memory Programming Specifications*” (DS41226) to determine how to access the Configuration Word. The Configuration Word is not user addressable during device operation.

7.2 Oscillator Configurations

7.2.1 OSCILLATOR TYPES

The PIC12F508/509/16F505 devices can be operated in up to six different oscillator modes. The user can program up to three Configuration bits (FOSC<1:0> [PIC12F508/509], FOSC<2:0> [PIC16F505]). To select one of these modes:

- LP: Low-Power Crystal
- XT: Crystal/Resonator
- HS: High-Speed Crystal/Resonator (PIC16F505 only)
- INTRC: Internal 4 MHz Oscillator
- EXTRC: External Resistor/Capacitor
- EC: External High-Speed Clock Input (PIC16F505 only)

7.2.2 CRYSTAL OSCILLATOR/CERAMIC RESONATORS

In HS (PIC16F505), XT or LP modes, a crystal or ceramic resonator is connected to the (GP5/RB5)/OSC1/(CLKIN) and (GP4/RB4)/OSC2/(CLKOUT) pins to establish oscillation (Figure 7-1). The PIC12F508/509/16F505 oscillator designs require the use of a parallel cut crystal. Use of a series cut crystal may give a frequency out of the crystal manufacturers specifications. When in HS (PIC16F505), XT or LP modes, the device can have an external clock source drive the (GP5/RB5)/OSC1/CLKIN pin (Figure 7-2). When the part is used in this fashion, the output drive levels on the OSC2 pin are very weak. This pin should be left open and unloaded. Also, when using this mode, the external clock should observe the frequency limits for the clock mode chosen (HS, XT or LP).

Note 1: This device has been designed to perform to the parameters of its data sheet. It has been tested to an electrical specification designed to determine its conformance with these parameters. Due to process differences in the manufacture of this device, this device may have different performance characteristics than its earlier version. These differences may cause this device to perform differently in your application than the earlier version of this device.

2: The user should verify that the device oscillator starts and performs as expected. Adjusting the loading capacitor values and/or the Oscillator mode may be required.

FIGURE 7-1: CRYSTAL OPERATION (OR CERAMIC RESONATOR) (HS, XT OR LP OSC CONFIGURATION)

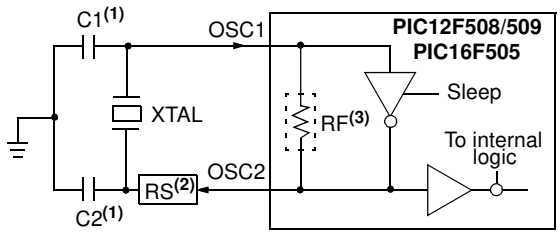

Note 1: See Capacitor Selection tables for recommended values of C1 and C2.

2: A series resistor (RS) may be required for AT strip cut crystals.

3: RF approx. value = 10 MΩ.

FIGURE 7-2: EXTERNAL CLOCK INPUT OPERATION (HS, XT OR LP OSC CONFIGURATION)

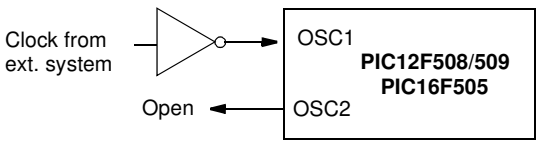

TABLE 7-1: CAPACITOR SELECTION FOR CERAMIC RESONATORS – PIC12F508/509/16F505(1)

Osc Type	Resonator Freq.	Cap. Range C1	Cap. Range C2
XT	4.0 MHz	30 pF	30 pF
HS(2)	16 MHz	10-47 pF	10-47 pF

Note 1: These values are for design guidance only. Since each resonator has its own characteristics, the user should consult the resonator manufacturer for appropriate values of external components.

2: PIC16F505 only.

© 2009 Microchip Technology Inc.

TABLE 7-2: CAPACITOR SELECTION FOR CRYSTAL OSCILLATOR – PIC12F508/509/16F505(2)

Osc Type	Resonator Freq.	Cap. Range C1	Cap. Range C2
LP	32 kHz(1)	15 pF	15 pF
XT	200 kHz 1 MHz 4 MHz	47-68 pF 15 pF 15 pF	47-68 pF 15 pF 15 pF
HS(3)	20 MHz	15-47 pF	15-47 pF

Note 1: For V_{DD} > 4.5V, C1 = C2 ≈ 30 pF is recommended.

2: These values are for design guidance only. Rs may be required to avoid overdriving crystals with low drive level specification. Since each crystal has its own characteristics, the user should consult the crystal manufacturer for appropriate values of external components.

3: PIC16F505 only.

7.2.3 EXTERNAL CRYSTAL OSCILLATOR CIRCUIT

Either a prepackaged oscillator or a simple oscillator circuit with TTL gates can be used as an external crystal oscillator circuit. Prepackaged oscillators provide a wide operating range and better stability. A well-designed crystal oscillator will provide good performance with TTL gates. Two types of crystal oscillator circuits can be used: one with parallel resonance, or one with series resonance.

Figure 7-3 shows implementation of a parallel resonant oscillator circuit. The circuit is designed to use the fundamental frequency of the crystal. The 74AS04 inverter performs the 180-degree phase shift that a parallel oscillator requires. The 4.7 kΩ resistor provides the negative feedback for stability. The 10 kΩ potentiometers bias the 74AS04 in the linear region. This circuit could be used for external oscillator designs.

FIGURE 7-3: EXTERNAL PARALLEL RESONANT CRYSTAL OSCILLATOR CIRCUIT

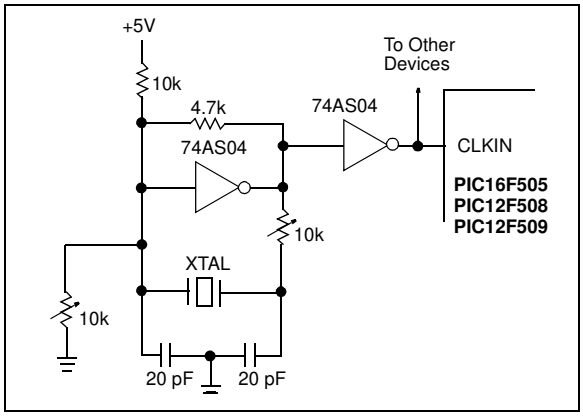

Figure 7-4 shows a series resonant oscillator circuit. This circuit is also designed to use the fundamental frequency of the crystal. The inverter performs a 180-degree phase shift in a series resonant oscillator circuit. The 330 Ω resistors provide the negative feedback to bias the inverters in their linear region.

FIGURE 7-4: EXTERNAL SERIES RESONANT CRYSTAL OSCILLATOR CIRCUIT

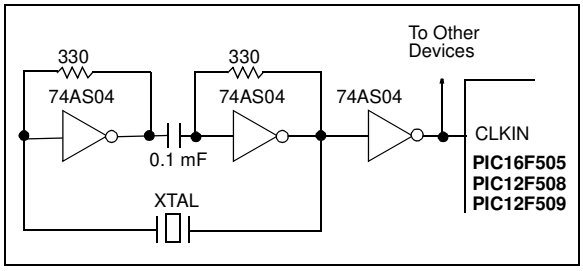

7.2.4 EXTERNAL RC OSCILLATOR

For timing insensitive applications, the RC device option offers additional cost savings. The RC oscillator frequency is a function of the supply voltage, the resistor (R_{EXT}) and capacitor (C_{EXT}) values, and the operating temperature. In addition to this, the oscillator frequency will vary from unit-to-unit due to normal process parameter variation. Furthermore, the difference in lead frame capacitance between package types will also affect the oscillation frequency, especially for low C_{EXT} values. The user also needs to take into account variation due to tolerance of external R and C components used.

Figure 7-5 shows how the R/C combination is connected to the PIC12F508/509/16F505 devices. For R_{EXT} values below 3.0 kΩ, the oscillator operation may become unstable, or stop completely. For very high R_{EXT} values (e.g., 1 MΩ), the oscillator becomes sensitive to noise, humidity and leakage. Thus, we recommend keeping R_{EXT} between 5.0 kΩ and 100 kΩ.

Although the oscillator will operate with no external capacitor (C_{EXT} = 0 pF), we recommend using values above 20 pF for noise and stability reasons. With no or small external capacitance, the oscillation frequency can vary dramatically due to changes in external capacitances, such as PCB trace capacitance or package lead frame capacitance.

Section 10.0 "Electrical Characteristics" shows RC frequency variation from part-to-part due to normal process variation. The variation is larger for larger values of R (since leakage current variation will affect RC frequency more for large R) and for smaller values of C (since variation of input capacitance will affect RC frequency more).

Also, see the Electrical Specifications section for variation of oscillator frequency due to V_{DD} for given R_{EXT}/C_{EXT} values, as well as frequency variation due to operating temperature for given R, C and V_{DD} values.

FIGURE 7-5: EXTERNAL RC OSCILLATOR MODE

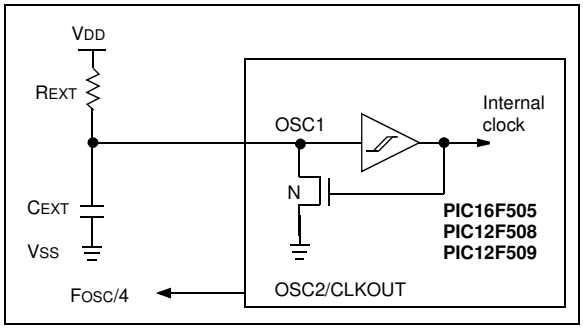

7.2.5 INTERNAL 4 MHz RC OSCILLATOR

The internal RC oscillator provides a fixed 4 MHz (nominal) system clock at V_{DD} = 5V and 25°C, (see **Section 10.0 "Electrical Characteristics"** for information on variation over voltage and temperature).

In addition, a calibration instruction is programmed into the last address of memory, which contains the calibration value for the internal RC oscillator. This location is always uncode protected, regardless of the code-protect settings. This value is programmed as a `MOVLW XX` instruction where `XX` is the calibration value, and is placed at the Reset vector. This will load the W register with the calibration value upon Reset and the PC will then roll over to the users program at address 0x000. The user then has the option of writing the value to the OSCCAL Register (05h) or ignoring it.

OSCCAL, when written to with the calibration value, will "trim" the internal oscillator to remove process variation from the oscillator frequency.

Note:	Erasing the device will also erase the pre-programmed internal calibration value for the internal oscillator. The calibration value must be read prior to erasing the part so it can be reprogrammed correctly later.

For the PIC12F508/509/16F505 devices, only bits <7:1> of OSCCAL are implemented. Bits CAL6-CAL0 are used for calibration. Adjusting CAL6-CAL0 from '`0000000`' to '`1111111`' changes the clock speed. See Register 4-5 for more information.

Note:	The `0` bit of OSCCAL is unimplemented and should be written as '`0`' when modifying OSCCAL for compatibility with future devices.

© 2009 Microchip Technology Inc.

7.3 Reset

The device differentiates between various kinds of Reset:

- Power-on Reset (POR)
- $\overline{\text{MCLR}}$ Reset during normal operation
- $\overline{\text{MCLR}}$ Reset during Sleep
- WDT time-out Reset during normal operation
- WDT time-out Reset during Sleep
- Wake-up from Sleep on pin change

Some registers are not reset in any way, they are unknown on POR and unchanged in any other Reset. Most other registers are reset to "Reset state" on Power-on Reset (POR), $\overline{\text{MCLR}}$, WDT or Wake-up on pin change Reset during normal operation. They are not affected by a WDT Reset during Sleep or $\overline{\text{MCLR}}$ Reset during Sleep, since these Resets are viewed as resumption of normal operation. The exceptions to this are $\overline{\text{TO}}$, $\overline{\text{PD}}$ and RBWUF/GPWUF bits. They are set or cleared differently in different Reset situations. These bits are used in software to determine the nature of Reset. See Table 7-4 for a full description of Reset states of all registers.

TABLE 7-3: RESET CONDITIONS FOR REGISTERS – PIC12F508/509

Register	Address	Power-on Reset	$\overline{\text{MCLR}}$ Reset, WDT Time-out, Wake-up On Pin Change
W	—	qqqq qqqu(1)	qqqq qqqu(1)
INDF	00h	xxxx xxxx	uuuu uuuu
TMR0	01h	xxxx xxxx	uuuu uuuu
PC	02h	1111 1111	1111 1111
STATUS	03h	0001 1xxx	q00q quuu(2), (3)
FSR(4)	04h	110x xxxx	11uu uuuu
FSR(5)	04h	111x xxxx	111u uuuu
OSCCAL	05h	1111 111-	uuuu uuu-
GPIO	06h	--xx xxxx	--uu uuuu
OPTION	—	1111 1111	1111 1111
TRIS	—	--11 1111	--11 1111

Legend: u = unchanged, x = unknown, – = unimplemented bit, read as '0', q = value depends on condition.

Note 1: Bits <7:2> of W register contain oscillator calibration values due to MOVLW XX instruction at top of memory.

2: See Table 7-5 for Reset value for specific conditions.

3: If Reset was due to wake-up on pin change, then bit 7 = 1. All other Resets will cause bit 7 = 0.

4: PIC12F509 only.

5: PIC12F508 only.

TABLE 7-4: RESET CONDITIONS FOR REGISTERS – PIC16F505

Register	Address	Power-on Reset	$\overline{\text{MCLR}}$ Reset, WDT Time-out, Wake-up On Pin Change
W	—	qqqq qqqu(1)	qqqq qqqu(1)
INDF	00h	xxxx xxxx	uuuu uuuu
TMR0	01h	xxxx xxxx	uuuu uuuu
PC	02h	1111 1111	1111 1111
STATUS	03h	0001 1xxx	q00q quuu(2), (3)
FSR	04h	100x xxxx	1uuu uuuu
OSCCAL	05h	1111 111-	uuuu uuu-
PORTB	06h	--xx xxxx	--uu uuuu
PORTC	07h	--xx xxxx	--uu uuuu
OPTION	—	1111 1111	1111 1111
TRISB	—	--11 1111	--11 1111
TRISC	—	--11 1111	--11 1111

Legend: u = unchanged, x = unknown, – = unimplemented bit, read as '0', q = value depends on condition.

Note 1: Bits <7:2> of W register contain oscillator calibration values due to MOVLW XX instruction at top of memory.

2: See Table 7-5 for Reset value for specific conditions.

3: If Reset was due to wake-up on pin change, then bit 7 = 1. All other Resets will cause bit 7 = 0.

TABLE 7-5: RESET CONDITION FOR SPECIAL REGISTERS

	STATUS Addr: 03h	PCL Addr: 02h
Power-on Reset	0001 1xxx	1111 1111
$\overline{\text{MCLR}}$ Reset during normal operation	000u uuuu	1111 1111
$\overline{\text{MCLR}}$ Reset during Sleep	0001 0uuu	1111 1111
WDT Reset during Sleep	0000 0uuu	1111 1111
WDT Reset normal operation	0000 uuuu	1111 1111
Wake-up from Sleep on pin change	1001 0uuu	1111 1111

Legend: u = unchanged, x = unknown, – = unimplemented bit, read as '0'.

© 2009 Microchip Technology Inc.

7.3.1 $\overline{\text{MCLR}}$ ENABLE

This Configuration bit, when unprogrammed (left in the '1' state), enables the external $\overline{\text{MCLR}}$ function. When programmed, the $\overline{\text{MCLR}}$ function is tied to the internal VDD and the pin is assigned to be an input only. See Figure 7-6.

FIGURE 7-6: $\overline{\text{MCLR}}$ SELECT

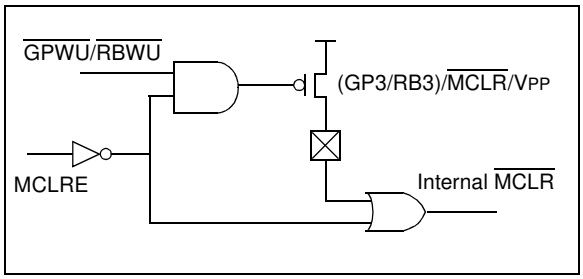

7.4 Power-on Reset (POR)

The PIC12F508/509/16F505 devices incorporate an on-chip Power-on Reset (POR) circuitry, which provides an internal chip Reset for most power-up situations.

The on-chip POR circuit holds the chip in Reset until VDD has reached a high enough level for proper operation. To take advantage of the internal POR, program the (GP3/RB3)/$\overline{\text{MCLR}}$/VPP pin as $\overline{\text{MCLR}}$ and tie through a resistor to VDD, or program the pin as (GP3/RB3). An internal weak pull-up resistor is implemented using a transistor (refer to Table 10-2 for the pull-up resistor ranges). This will eliminate external RC components usually needed to create a Power-on Reset. A maximum rise time for VDD is specified. See **Section 10.0 "Electrical Characteristics"** for details.

When the devices start normal operation (exit the Reset condition), device operating parameters (voltage, frequency, temperature,...) must be met to ensure operation. If these conditions are not met, the devices must be held in Reset until the operating parameters are met.

A simplified block diagram of the on-chip Power-on Reset circuit is shown in Figure 7-7.

The Power-on Reset circuit and the Device Reset Timer (see **Section 7.5 "Device Reset Timer (DRT)"**) circuit are closely related. On power-up, the Reset latch is set and the DRT is reset. The DRT timer begins counting once it detects $\overline{\text{MCLR}}$ to be high. After the time-out period, which is typically 18 ms, it will reset the Reset latch and thus end the on-chip Reset signal.

A power-up example where $\overline{\text{MCLR}}$ is held low is shown in Figure 7-8. VDD is allowed to rise and stabilize before bringing $\overline{\text{MCLR}}$ high. The chip will actually come out of Reset TDRT msec after $\overline{\text{MCLR}}$ goes high.

In Figure 7-9, the on-chip Power-on Reset feature is being used ($\overline{\text{MCLR}}$ and VDD are tied together or the pin is programmed to be (GP3/RB3). The VDD is stable before the start-up timer times out and there is no problem in getting a proper Reset. However, Figure 7-10 depicts a problem situation where VDD rises too slowly. The time between when the DRT senses that $\overline{\text{MCLR}}$ is high and when $\overline{\text{MCLR}}$ and VDD actually reach their full value, is too long. In this situation, when the start-up timer times out, VDD has not reached the VDD (min) value and the chip may not function correctly. For such situations, we recommend that external RC circuits be used to achieve longer POR delay times (Figure 7-9).

Note:	When the devices start normal operation (exit the Reset condition), device operating parameters (voltage, frequency, temperature, etc.) must be met to ensure operation. If these conditions are not met, the device must be held in Reset until the operating conditions are met.

For additional information, refer to Application Notes AN522 *"Power-Up Considerations"* (DS00522) and AN607 *"Power-up Trouble Shooting"* (DS00607).

FIGURE 7-7: SIMPLIFIED BLOCK DIAGRAM OF ON-CHIP RESET CIRCUIT

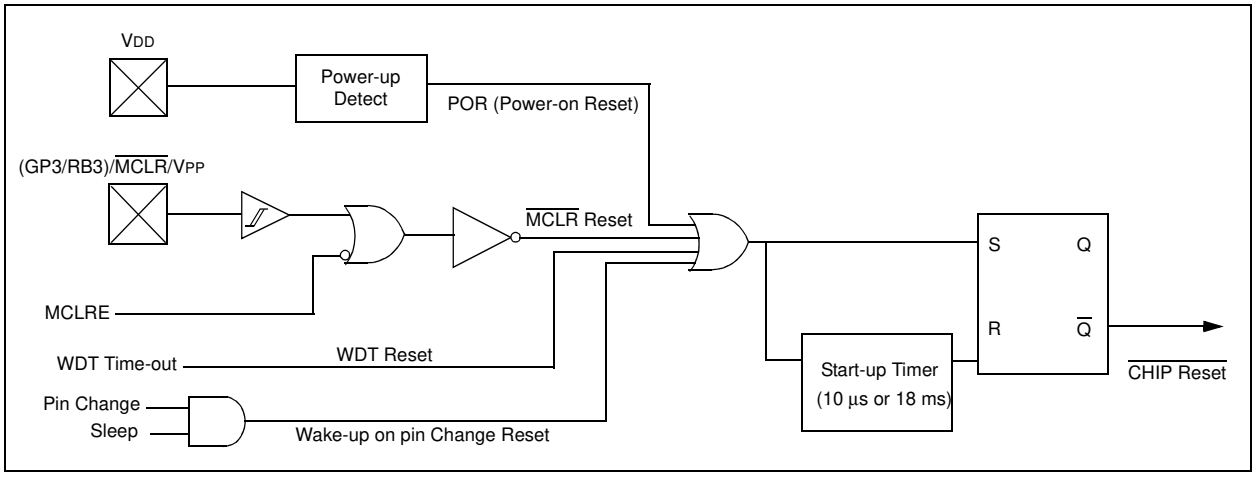

FIGURE 7-8: TIME-OUT SEQUENCE ON POWER-UP (MCLR PULLED LOW)

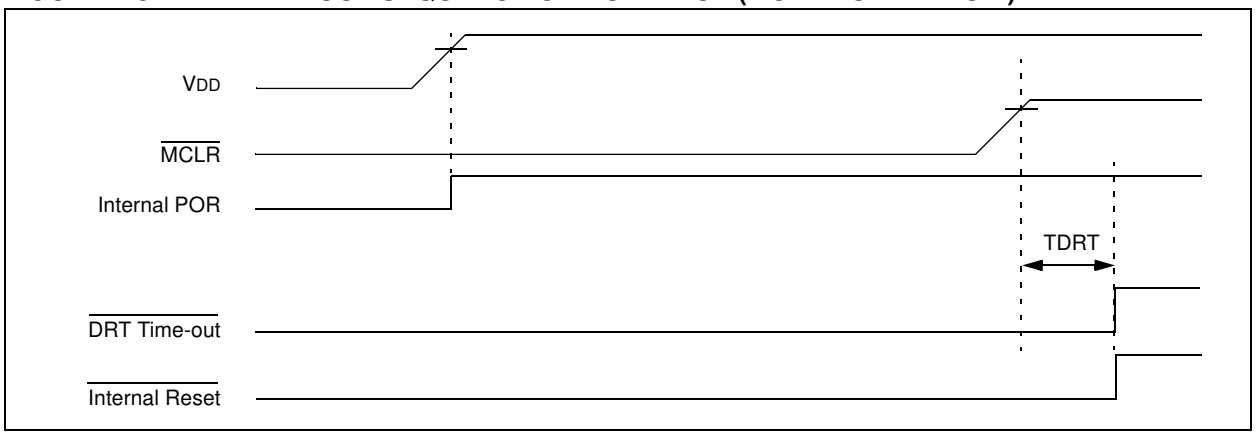

FIGURE 7-9: TIME-OUT SEQUENCE ON POWER-UP (MCLR TIED TO VDD): FAST VDD RISE TIME

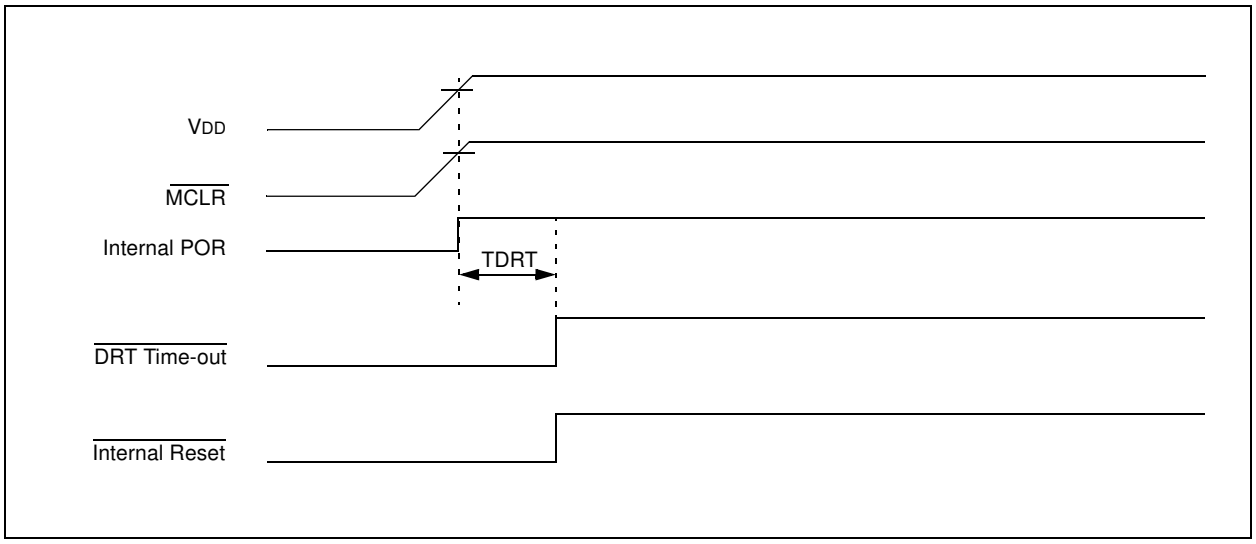

© 2009 Microchip Technology Inc.

FIGURE 7-10: TIME-OUT SEQUENCE ON POWER-UP ($\overline{MCLR}$ TIED TO V_{DD}): SLOW V_{DD} RISE TIME

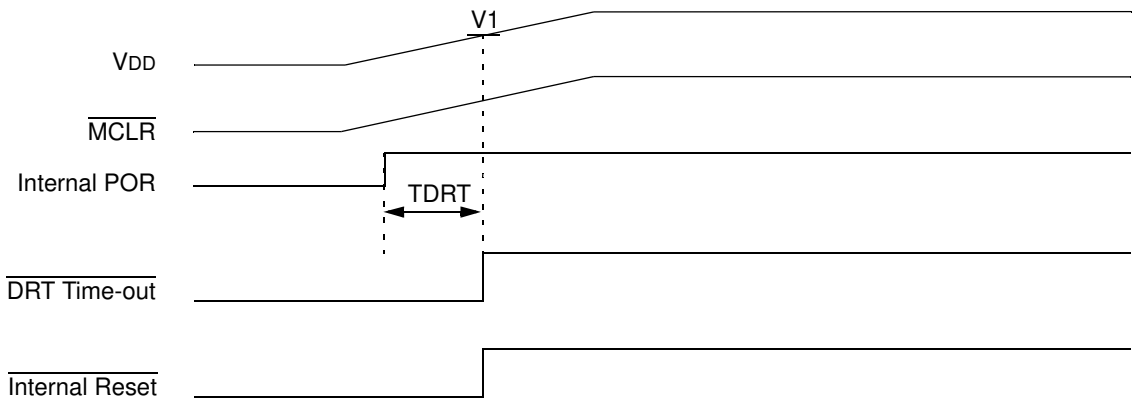

Note: When V_{DD} rises slowly, the T_{DRT} time-out expires long before V_{DD} has reached its final value. In this example, the chip will reset properly if, and only if, V1 ≥ V_{DD} min.

7.5 Device Reset Timer (DRT)

On the PIC12F508/509/16F505 devices, the DRT runs any time the device is powered up. DRT runs from Reset and varies based on oscillator selection and Reset type (see Table 7-6).

The DRT operates on an internal RC oscillator. The processor is kept in Reset as long as the DRT is active. The DRT delay allows V_{DD} to rise above V_{DD} min. and for the oscillator to stabilize.

Oscillator circuits based on crystals or ceramic resonators require a certain time after power-up to establish a stable oscillation. The on-chip DRT keeps the devices in a Reset condition for approximately 18 ms after $\overline{MCLR}$ has reached a logic high (V_{IH} $\overline{MCLR}$) level. Programming (GP3/RB3)/$\overline{MCLR}$/V_{PP} as $\overline{MCLR}$ and using an external RC network connected to the $\overline{MCLR}$ input is not required in most cases. This allows savings in cost-sensitive and/or space restricted applications, as well as allowing the use of the (GP3/RB3)/$\overline{MCLR}$/V_{PP} pin as a general purpose input.

The Device Reset Time delays will vary from chip-to-chip due to V_{DD}, temperature and process variation. See AC parameters for details.

The DRT will also be triggered upon a Watchdog Timer time-out from Sleep. This is particularly important for applications using the WDT to wake from Sleep mode automatically.

Reset sources are POR, $\overline{MCLR}$, WDT time-out and wake-up on pin change. See **Section 7.9.2 “Wake-up from Sleep”, Notes 1, 2** and **3**.

7.6 Watchdog Timer (WDT)

The Watchdog Timer (WDT) is a free running on-chip RC oscillator, which does not require any external components. This RC oscillator is separate from the external RC oscillator of the (GP5/RB5)/OSC1/CLKIN pin and the internal 4 MHz oscillator. This means that the WDT will run even if the main processor clock has been stopped, for example, by execution of a `SLEEP` instruction. During normal operation or Sleep, a WDT Reset or wake-up Reset, generates a device Reset.

The $\overline{TO}$ bit (STATUS<4>) will be cleared upon a Watchdog Timer Reset.

The WDT can be permanently disabled by programming the configuration WDTE as a ‘0’ (see **Section 7.1 “Configuration Bits”**). Refer to the PIC12F508/509/16F505 Programming Specifications to determine how to access the Configuration Word.

TABLE 7-6: DRT (DEVICE RESET TIMER PERIOD)

Oscillator Configuration	POR Reset	Subsequent Resets
INTOSC, EXTRC	18 ms (typical)	10 µs (typical)
HS(1), XT, LP	18 ms (typical)	18 ms (typical)
EC(1)	18 ms (typical)	10 µs (typical)

Note 1: PIC16F505 only.

7.6.1 WDT PERIOD

The WDT has a nominal time-out period of 18 ms, (with no prescaler). If a longer time-out period is desired, a prescaler with a division ratio of up to 1:128 can be assigned to the WDT (under software control) by writing to the OPTION register. Thus, a time-out period of a nominal 2.3 seconds can be realized. These periods vary with temperature, V_{DD} and part-to-part process variations (see DC specs).

Under worst case conditions (V_{DD} = Min., Temperature = Max., max. WDT prescaler), it may take several seconds before a WDT time-out occurs.

7.6.2 WDT PROGRAMMING CONSIDERATIONS

The `CLRWDT` instruction clears the WDT and the postscaler, if assigned to the WDT, and prevents it from timing out and generating a device Reset.

The `SLEEP` instruction resets the WDT and the post-scaler, if assigned to the WDT. This gives the maximum Sleep time before a WDT wake-up Reset.

© 2009 Microchip Technology Inc.

FIGURE 7-11: WATCHDOG TIMER BLOCK DIAGRAM

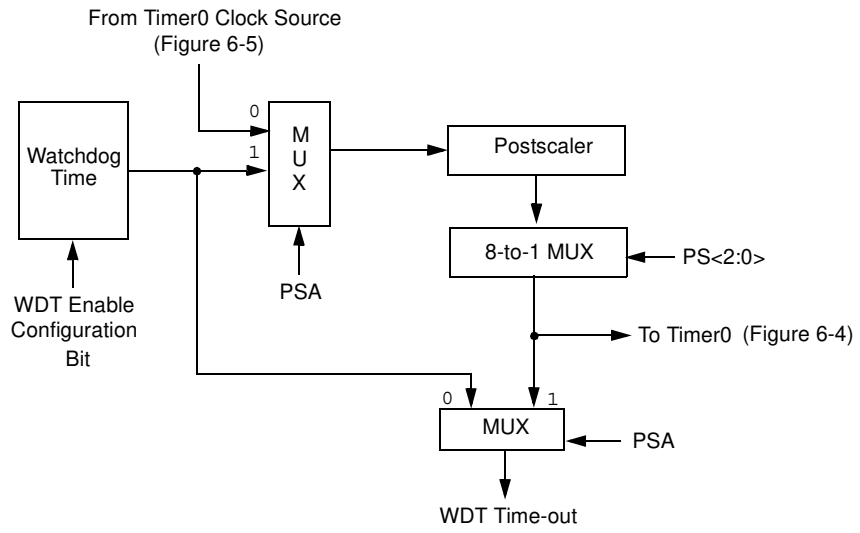

Note 1: T0CS, T0SE, PSA, PS<2:0> are bits in the OPTION register.

TABLE 7-7: SUMMARY OF REGISTERS ASSOCIATED WITH THE WATCHDOG TIMER

Address	Name	Bit 7	Bit 6	Bit 5	Bit 4	Bit 3	Bit 2	Bit 1	Bit 0	Value on Power-On Reset	Value on All Other Resets
N/A	OPTION(1)	$\overline{\text{GPWU}}$	$\overline{\text{GPPU}}$	T0CS	T0SE	PSA	PS2	PS1	PS0	1111 1111	1111 1111
N/A	OPTION(2)	$\overline{\text{RBWU}}$	$\overline{\text{RBPU}}$	T0CS	T0SE	PSA	PS2	PS1	PS0	1111 1111	1111 1111

Legend: Shaded boxes = Not used by Watchdog Timer. – = unimplemented, read as '0', u = unchanged.

Note 1: PIC12F508/509 only.

2: PIC16F505 only.

7.7 Time-out Sequence, Power-down and Wake-up from Sleep Status Bits (TO, PD, GPWUF/RBWUF)

The $\overline{TO}$, $\overline{PD}$ and (GPWUF/RBWUF) bits in the STATUS register can be tested to determine if a Reset condition has been caused by a Power-up condition, a $\overline{MCLR}$ or Watchdog Timer (WDT) Reset.

TABLE 7-8: $\overline{TO}$/$\overline{PD}$/(GPWUF/RBWUF) STATUS AFTER RESET

GPWUF/ RBWUF	$\overline{TO}$	$\overline{PD}$	Reset Caused By
0	0	0	WDT wake-up from Sleep
0	0	u	WDT time-out (not from Sleep)
0	1	0	$\overline{MCLR}$ wake-up from Sleep
0	1	1	Power-up
0	u	u	$\overline{MCLR}$ not during Sleep
1	1	0	Wake-up from Sleep on pin change

Legend: u = unchanged

Note 1: The $\overline{TO}$, $\overline{PD}$ and GPWUF/RBWUF bits maintain their status (u) until a Reset occurs. A low-pulse on the $\overline{MCLR}$ input does not change the $\overline{TO}$, $\overline{PD}$ and GPWUF/RBWUF Status bits.

7.8 Reset on Brown-out

A brown-out is a condition where device power (VDD) dips below its minimum value, but not to zero, and then recovers. The device should be reset in the event of a brown-out.

To reset PIC12F508/509/16F505 devices when a brown-out occurs, external brown-out protection circuits may be built, as shown in Figure 7-12 and Figure 7-13.

FIGURE 7-12: BROWN-OUT PROTECTION CIRCUIT 1

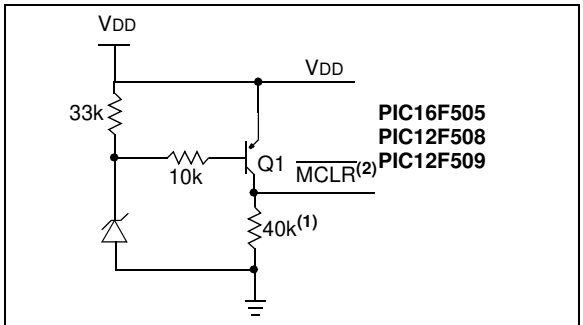

Note 1: This circuit will activate Reset when VDD goes below Vz + 0.7V (where Vz = Zener voltage).

2: Pin must be confirmed as $\overline{MCLR}$.

FIGURE 7-13: BROWN-OUT PROTECTION CIRCUIT 2

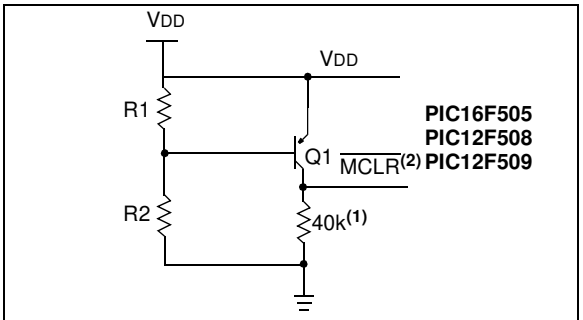

Note 1: This brown-out circuit is less expensive, although less accurate. Transistor Q1 turns off when VDD is below a certain level such that:

$$V_{DD} \cdot \frac{R1}{R1 + R2} = 0.7V$$

2: Pin must be confirmed as $\overline{MCLR}$.

FIGURE 7-14: BROWN-OUT PROTECTION CIRCUIT 3

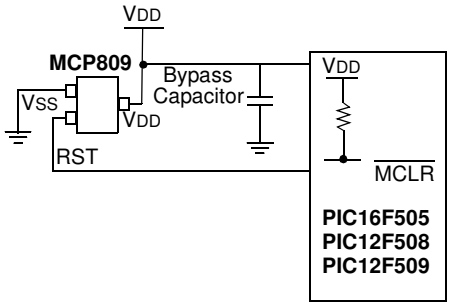

Note: This brown-out protection circuit employs Microchip Technology's MCP809 micro-controller supervisor. There are 7 different trip point selections to accommodate 5V to 3V systems.

© 2009 Microchip Technology Inc.

7.9 Power-down Mode (Sleep)

A device may be powered down (Sleep) and later powered up (wake-up from Sleep).

7.9.1 SLEEP

The Power-Down mode is entered by executing a `SLEEP` instruction.

If enabled, the Watchdog Timer will be cleared but keeps running, the $\overline{TO}$ bit (STATUS<4>) is set, the $\overline{PD}$ bit (STATUS<3>) is cleared and the oscillator driver is turned off. The I/O ports maintain the status they had before the `SLEEP` instruction was executed (driving high, driving low or high-impedance).

Note:	A Reset generated by a WDT time-out does not drive the $\overline{MCLR}$ pin low.

For lowest current consumption while powered down, the T0CKI input should be at V_{DD} or V_{SS} and the (GP3/RB3)/$\overline{MCLR}$/V_{PP} pin must be at a logic high level if $\overline{MCLR}$ is enabled.

7.9.2 WAKE-UP FROM SLEEP

The device can wake-up from Sleep through one of the following events:

1. An external Reset input on (GP3/RB3)/$\overline{MCLR}$/V_{PP} pin, when configured as $\overline{MCLR}$.
2. A Watchdog Timer time-out Reset (if WDT was enabled).
3. A change on input pin GP0/RB0, GP1/RB1, GP3/RB3 or RB4 when wake-up on change is enabled.

These events cause a device Reset. The $\overline{TO}$, $\overline{PD}$ and GPWUF/RBWUF bits can be used to determine the cause of device Reset. The $\overline{TO}$ bit is cleared if a WDT time-out occurred (and caused wake-up). The $\overline{PD}$ bit, which is set on power-up, is cleared when `SLEEP` is invoked. The GPWUF/RBWUF bit indicates a change in state while in Sleep at pins GP0/RB0, GP1/RB1, GP3/RB3 or RB4 (since the last file or bit operation on GP/RB port).

Note:	**Caution:** Right before entering Sleep, read the input pins. When in Sleep, wake-up occurs when the values at the pins change from the state they were in at the last reading. If a wake-up on change occurs and the pins are not read before re-entering Sleep, a wake-up will occur immediately even if no pins change while in Sleep mode.

The WDT is cleared when the device wakes from Sleep, regardless of the wake-up source.

7.10 Program Verification/Code Protection

If the code protection bit has not been programmed, the on-chip program memory can be read out for verification purposes.

The first 64 locations and the last location (OSCCAL) can be read, regardless of the code protection bit setting.

The last memory location can be read regardless of the code protection bit setting on the PIC12F508/509/16F505 devices.

7.11 ID Locations

Four memory locations are designated as ID locations where the user can store checksum or other code identification numbers. These locations are not accessible during normal execution, but are readable and writable during Program/Verify.

Use only the lower 4 bits of the ID locations and always program the upper 8 bits as '`0`'s.

7.12 In-Circuit Serial Programming™

The PIC12F508/509/16F505 microcontrollers can be serially programmed while in the end application circuit. This is simply done with two lines for clock and data, and three other lines for power, ground and the programming voltage. This allows customers to manufacture boards with unprogrammed devices and then program the microcontroller just before shipping the product. This also allows the most recent firmware, or a custom firmware, to be programmed.

The devices are placed into a Program/Verify mode by holding the GP1/RB1 and GP0/RB0 pins low while raising the $\overline{MCLR}$ (V_{PP}) pin from V_{IL} to V_{IHH} (see programming specification). GP1/RB1 becomes the programming clock and GP0/RB0 becomes the programming data. Both GP1/RB1 and GP0/RB0 are Schmitt Trigger inputs in this mode.

After Reset, a 6-bit command is then supplied to the device. Depending on the command, 14 bits of program data are then supplied to or from the device, depending if the command was a Load or a Read. For complete details of serial programming, please refer to the PIC12F508/509/16F505 Programming Specifications.

A typical In-Circuit Serial Programming connection is shown in Figure 7-15.

FIGURE 7-15: TYPICAL IN-CIRCUIT SERIAL PROGRAMMING CONNECTION

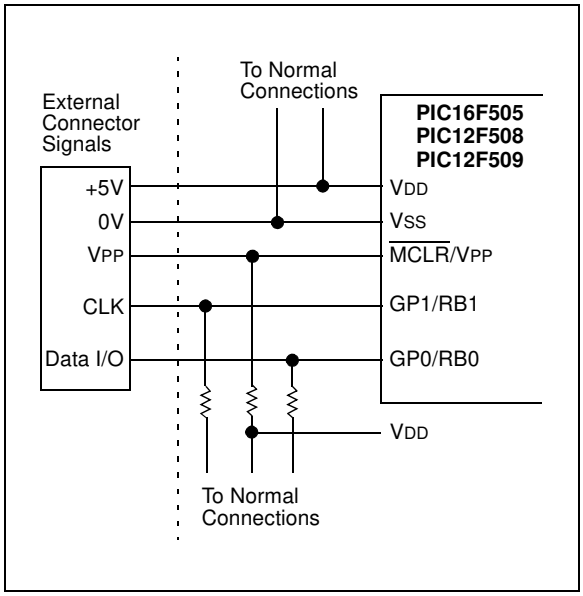

© 2009 Microchip Technology Inc.

8.0 INSTRUCTION SET SUMMARY

The PIC16 instruction set is highly orthogonal and is comprised of three basic categories.

- **Byte-oriented** operations
- **Bit-oriented** operations
- **Literal and control** operations

Each PIC16 instruction is a 12-bit word divided into an **opcode**, which specifies the instruction type, and one or more **operands** which further specify the operation of the instruction. The formats for each of the categories is presented in Figure 8-1, while the various opcode fields are summarized in Table 8-1.

For **byte-oriented** instructions, 'f' represents a file register designator and 'd' represents a destination designator. The file register designator specifies which file register is to be used by the instruction.

The destination designator specifies where the result of the operation is to be placed. If 'd' is '0', the result is placed in the W register. If 'd' is '1', the result is placed in the file register specified in the instruction.

For **bit-oriented** instructions, 'b' represents a bit field designator which selects the number of the bit affected by the operation, while 'f' represents the number of the file in which the bit is located.

For **literal and control** operations, 'k' represents an 8 or 9-bit constant or literal value.

TABLE 8-1: OPCODE FIELD DESCRIPTIONS

Field	Description
f	Register file address (0x00 to 0x7F)
W	Working register (accumulator)
b	Bit address within an 8-bit file register
k	Literal field, constant data or label
x	Don't care location (= 0 or 1) The assembler will generate code with x = 0. It is the recommended form of use for compatibility with all Microchip software tools.
d	Destination select; d = 0 (store result in W) d = 1 (store result in file register 'f') Default is d = 1
label	Label name
TOS	Top-of-Stack
PC	Program Counter
WDT	Watchdog Timer counter
$\overline{TO}$	Time-out bit
$\overline{PD}$	Power-down bit
dest	Destination, either the W register or the specified register file location
[ ]	Options
( )	Contents
→	Assigned to
< >	Register bit field
∈	In the set of
italics	User defined term (font is courier)

All instructions are executed within a single instruction cycle, unless a conditional test is true or the program counter is changed as a result of an instruction. In this case, the execution takes two instruction cycles. One instruction cycle consists of four oscillator periods. Thus, for an oscillator frequency of 4 MHz, the normal instruction execution time is 1 µs. If a conditional test is true or the program counter is changed as a result of an instruction, the instruction execution time is 2 µs.

Figure 8-1 shows the three general formats that the instructions can have. All examples in the figure use the following format to represent a hexadecimal number:

0xhhh

where 'h' signifies a hexadecimal digit.

FIGURE 8-1: GENERAL FORMAT FOR INSTRUCTIONS

Byte-oriented file register operations

11 – 6	5	4 – 0
OPCODE	d	f (FILE #)

d = 0 for destination W
d = 1 for destination f
f = 5-bit file register address

Bit-oriented file register operations

11 – 8	7 – 5	4 – 0
OPCODE	b (BIT #)	f (FILE #)

b = 3-bit bit address
f = 5-bit file register address

Literal and control operations (except GOTO)

11 – 8	7 – 0
OPCODE	k (literal)

k = 8-bit immediate value

Literal and control operations – GOTO instruction

11 – 9	8 – 0
OPCODE	k (literal)

k = 9-bit immediate value

TABLE 8-2: INSTRUCTION SET SUMMARY

Mnemonic, Operands		Description	Cycles	12-Bit Opcode MSb		LSb	Status Affected	Notes
ADDWF	f, d	Add W and f	1	0001	11df	ffff	C, DC, Z	**1, 2, 4**
ANDWF	f, d	AND W with f	1	0001	01df	ffff	Z	**2, 4**
CLRF	f	Clear f	1	0000	011f	ffff	Z	**4**
CLRW	—	Clear W	1	0000	0100	0000	Z	
COMF	f, d	Complement f	1	0010	01df	ffff	Z	
DECF	f, d	Decrement f	1	0000	11df	ffff	Z	**2, 4**
DECFSZ	f, d	Decrement f, Skip if 0	1(2)	0010	11df	ffff	None	**2, 4**
INCF	f, d	Increment f	1	0010	10df	ffff	Z	**2, 4**
INCFSZ	f, d	Increment f, Skip if 0	1(2)	0011	11df	ffff	None	**2, 4**
IORWF	f, d	Inclusive OR W with f	1	0001	00df	ffff	Z	**2, 4**
MOVF	f, d	Move f	1	0010	00df	ffff	Z	**2, 4**
MOVWF	f	Move W to f	1	0000	001f	ffff	None	**1, 4**
NOP	—	No Operation	1	0000	0000	0000	None	
RLF	f, d	Rotate left f through Carry	1	0011	01df	ffff	C	**2, 4**
RRF	f, d	Rotate right f through Carry	1	0011	00df	ffff	C	**2, 4**
SUBWF	f, d	Subtract W from f	1	0000	10df	ffff	C, DC, Z	**1, 2, 4**
SWAPF	f, d	Swap f	1	0011	10df	ffff	None	**2, 4**
XORWF	f, d	Exclusive OR W with f	1	0001	10df	ffff	Z	**2, 4**
BIT-ORIENTED FILE REGISTER OPERATIONS								
BCF	f, b	Bit Clear f	1	0100	bbbf	ffff	None	**2, 4**
BSF	f, b	Bit Set f	1	0101	bbbf	ffff	None	**2, 4**
BTFSC	f, b	Bit Test f, Skip if Clear	1(2)	0110	bbbf	ffff	None	
BTFSS	f, b	Bit Test f, Skip if Set	1(2)	0111	bbbf	ffff	None	
LITERAL AND CONTROL OPERATIONS								
ANDLW	k	AND literal with W	1	1110	kkkk	kkkk	Z	
CALL	k	Call Subroutine	2	1001	kkkk	kkkk	None	**1**
CLRWDT	—	Clear Watchdog Timer	1	0000	0000	0100	$\overline{TO}$, $\overline{PD}$	
GOTO	k	Unconditional branch	2	101k	kkkk	kkkk	None	
IORLW	k	Inclusive OR literal with W	1	1101	kkkk	kkkk	Z	
MOVLW	k	Move literal to W	1	1100	kkkk	kkkk	None	
OPTION	—	Load OPTION register	1	0000	0000	0010	None	
RETLW	k	Return, place literal in W	2	1000	kkkk	kkkk	None	
SLEEP	—	Go into Standby mode	1	0000	0000	0011	$\overline{TO}$, $\overline{PD}$	
TRIS	f	Load TRIS register	1	0000	0000	0fff	None	**3**
XORLW	k	Exclusive OR literal to W	1	1111	kkkk	kkkk	Z	

Note 1: The 9th bit of the program counter will be forced to a ‘0’ by any instruction that writes to the PC except for GOTO. See **Section 4.7 “Program Counter”**.

2: When an I/O register is modified as a function of itself (e.g. MOVF PORTB, 1), the value used will be that value present on the pins themselves. For example, if the data latch is ‘1’ for a pin configured as input and is driven low by an external device, the data will be written back with a ‘0’.

3: The instruction TRIS f, where f = 6, causes the contents of the W register to be written to the tri-state latches of PORTB. A ‘1’ forces the pin to a high-impedance state and disables the output buffers.

4: If this instruction is executed on the TMR0 register (and, where applicable, d = 1), the prescaler will be cleared (if assigned to TMR0).

© 2009 Microchip Technology Inc.

ADDWF	Add W and f
Syntax:	[*label*] ADDWF f,d
Operands:	$0 \le f \le 31$ $d \in [0,1]$
Operation:	(W) + (f) → (dest)
Status Affected:	C, DC, Z
Description:	Add the contents of the W register and register 'f'. If 'd' is '0', the result is stored in the W register. If 'd' is '1', the result is stored back in register 'f'.

ANDLW	AND literal with W
Syntax:	[*label*] ANDLW k
Operands:	$0 \le k \le 255$
Operation:	(W).AND. (k) → (W)
Status Affected:	Z
Description:	The contents of the W register are AND'ed with the eight-bit literal 'k'. The result is placed in the W register.

ANDWF	AND W with f
Syntax:	[*label*] ANDWF f,d
Operands:	$0 \le f \le 31$ $d \in [0,1]$
Operation:	(W) .AND. (f) → (dest)
Status Affected:	Z
Description:	The contents of the W register are AND'ed with register 'f'. If 'd' is '0', the result is stored in the W register. If 'd' is '1', the result is stored back in register 'f'.

BCF	Bit Clear f
Syntax:	[*label*] BCF f,b
Operands:	$0 \le f \le 31$ $0 \le b \le 7$
Operation:	0 → (f<b>)
Status Affected:	None
Description:	Bit 'b' in register 'f' is cleared.

BSF	Bit Set f
Syntax:	[*label*] BSF f,b
Operands:	$0 \le f \le 31$ $0 \le b \le 7$
Operation:	1 → (f<b>)
Status Affected:	None
Description:	Bit 'b' in register 'f' is set.

BTFSC	Bit Test f, Skip if Clear
Syntax:	[*label*] BTFSC f,b
Operands:	$0 \le f \le 31$ $0 \le b \le 7$
Operation:	skip if (f<b>) = 0
Status Affected:	None
Description:	If bit 'b' in register 'f' is '0', then the next instruction is skipped. If bit 'b' is '0', then the next instruction fetched during the current instruction execution is discarded, and a NOP is executed instead, making this a two-cycle instruction.

BTFSS	Bit Test f, Skip if Set
Syntax:	[*label*] BTFSS f,b
Operands:	$0 \le f \le 31$ $0 \le b < 7$
Operation:	skip if (f<b>) = 1
Status Affected:	None
Description:	If bit 'b' in register 'f' is '1', then the next instruction is skipped. If bit 'b' is '1', then the next instruction fetched during the current instruction execution, is discarded and a NOP is executed instead, making this a two-cycle instruction.

CALL	Subroutine Call
Syntax:	[*label*] CALL k
Operands:	$0 \le k \le 255$
Operation:	(PC) + 1 → Top-of-Stack; k → PC<7:0>; (STATUS<6:5>) → PC<10:9>; 0 → PC<8>
Status Affected:	None
Description:	Subroutine call. First, return address (PC + 1) is PUSHed onto the stack. The eight-bit immediate address is loaded into PC bits <7:0>. The upper bits PC<10:9> are loaded from STATUS<6:5>, PC<8> is cleared. CALL is a two-cycle instruction.

CLRF	Clear f
Syntax:	[*label*] CLRF f
Operands:	$0 \le f \le 31$
Operation:	00h → (f); 1 → Z
Status Affected:	Z
Description:	The contents of register 'f' are cleared and the Z bit is set.

CLRW	Clear W
Syntax:	[*label*] CLRW
Operands:	None
Operation:	00h → (W); 1 → Z
Status Affected:	Z
Description:	The W register is cleared. Zero bit (Z) is set.

CLRWDT	Clear Watchdog Timer
Syntax:	[*label*] CLRWDT
Operands:	None
Operation:	00h → WDT; 0 → WDT prescaler (if assigned); 1 → $\overline{TO}$; 1 → $\overline{PD}$
Status Affected:	$\overline{TO}$, $\overline{PD}$
Description:	The CLRWDT instruction resets the WDT. It also resets the prescaler, if the prescaler is assigned to the WDT and not Timer0. Status bits $\overline{TO}$ and $\overline{PD}$ are set.

COMF	Complement f
Syntax:	[*label*] COMF f,d
Operands:	$0 \le f \le 31$ $d \in [0,1]$
Operation:	$(\bar{f}) \rightarrow$ (dest)
Status Affected:	Z
Description:	The contents of register 'f' are complemented. If 'd' is '0', the result is stored in the W register. If 'd' is '1', the result is stored back in register 'f'.

© 2009 Microchip Technology Inc.

DECF	Decrement f
Syntax:	[*label*] DECF f,d
Operands:	$0 \le f \le 31$ $d \in [0,1]$
Operation:	(f) – 1 → (dest)
Status Affected:	Z
Description:	Decrement register ‘f’. If ‘d’ is ‘0’, the result is stored in the W register. If ‘d’ is ‘1’, the result is stored back in register ‘f’.

DECFSZ	Decrement f, Skip if 0
Syntax:	[*label*] DECFSZ f,d
Operands:	$0 \le f \le 31$ $d \in [0,1]$
Operation:	(f) – 1 → d; skip if result = 0
Status Affected:	None
Description:	The contents of register ‘f’ are decremented. If ‘d’ is ‘0’, the result is placed in the W register. If ‘d’ is ‘1’, the result is placed back in register ‘f’. If the result is ‘0’, the next instruction, which is already fetched, is discarded and a NOP is executed instead making it a two-cycle instruction.

GOTO	Unconditional Branch
Syntax:	[*label*] GOTO k
Operands:	$0 \le k \le 511$
Operation:	k → PC<8:0>; STATUS<6:5> → PC<10:9>
Status Affected:	None
Description:	GOTO is an unconditional branch. The 9-bit immediate value is loaded into PC bits <8:0>. The upper bits of PC are loaded from STATUS<6:5>. GOTO is a two-cycle instruction.

INCF	Increment f
Syntax:	[*label*] INCF f,d
Operands:	$0 \le f \le 31$ $d \in [0,1]$
Operation:	(f) + 1 → (dest)
Status Affected:	Z
Description:	The contents of register ‘f’ are incremented. If ‘d’ is ‘0’, the result is placed in the W register. If ‘d’ is ‘1’, the result is placed back in register ‘f’.

INCFSZ	Increment f, Skip if 0
Syntax:	[*label*] INCFSZ f,d
Operands:	$0 \le f \le 31$ $d \in [0,1]$
Operation:	(f) + 1 → (dest), skip if result = 0
Status Affected:	None
Description:	The contents of register ‘f’ are incremented. If ‘d’ is ‘0’, the result is placed in the W register. If ‘d’ is ‘1’, the result is placed back in register ‘f’. If the result is ‘0’, then the next instruction, which is already fetched, is discarded and a NOP is executed instead making it a two-cycle instruction.

IORLW	Inclusive OR literal with W
Syntax:	[*label*] IORLW k
Operands:	$0 \le k \le 255$
Operation:	(W) .OR. (k) → (W)
Status Affected:	Z
Description:	The contents of the W register are OR’ed with the eight-bit literal ‘k’. The result is placed in the W register.

IORWF	Inclusive OR W with f
Syntax:	[*label*] IORWF f,d
Operands:	$0 \le f \le 31$ $d \in [0,1]$
Operation:	(W).OR. (f) → (dest)
Status Affected:	Z
Description:	Inclusive OR the W register with register 'f'. If 'd' is '0', the result is placed in the W register. If 'd' is '1', the result is placed back in register 'f'.

MOVF	Move f
Syntax:	[*label*] MOVF f,d
Operands:	$0 \le f \le 31$ $d \in [0,1]$
Operation:	(f) → (dest)
Status Affected:	Z
Description:	The contents of register 'f' are moved to destination 'd'. If 'd' is '0', destination is the W register. If 'd' is '1', the destination is file register 'f'. 'd' = 1 is useful as a test of a file register, since status flag Z is affected.

MOVLW	Move Literal to W
Syntax:	[*label*] MOVLW k
Operands:	$0 \le k \le 255$
Operation:	k → (W)
Status Affected:	None
Description:	The eight-bit literal 'k' is loaded into the W register. The "don't cares" will assembled as '0's.

MOVWF	Move W to f
Syntax:	[*label*] MOVWF f
Operands:	$0 \le f \le 31$
Operation:	(W) → (f)
Status Affected:	None
Description:	Move data from the W register to register 'f'.

NOP	No Operation
Syntax:	[*label*] NOP
Operands:	None
Operation:	No operation
Status Affected:	None
Description:	No operation.

OPTION	Load OPTION Register
Syntax:	[*label*] OPTION
Operands:	None
Operation:	(W) → OPTION
Status Affected:	None
Description:	The content of the W register is loaded into the OPTION register.

© 2009 Microchip Technology Inc.

RETLW	Return with Literal in W
Syntax:	[*label*] RETLW k
Operands:	$0 \le k \le 255$
Operation:	k → (W); TOS → PC
Status Affected:	None
Description:	The W register is loaded with the eight-bit literal ‘k’. The program counter is loaded from the top of the stack (the return address). This is a two-cycle instruction.

RLF	Rotate Left f through Carry
Syntax:	[*label*] RLF f,d
Operands:	$0 \le f \le 31$ $d \in [0,1]$
Operation:	See description below
Status Affected:	C
Description:	The contents of register ‘f’ are rotated one bit to the left through the Carry flag. If ‘d’ is ‘0’, the result is placed in the W register. If ‘d’ is ‘1’, the result is stored back in register ‘f’.

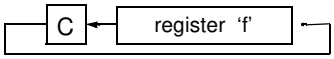

RRF	Rotate Right f through Carry
Syntax:	[*label*] RRF f,d
Operands:	$0 \le f \le 31$ $d \in [0,1]$
Operation:	See description below
Status Affected:	C
Description:	The contents of register ‘f’ are rotated one bit to the right through the Carry flag. If ‘d’ is ‘0’, the result is placed in the W register. If ‘d’ is ‘1’, the result is placed back in register ‘f’.

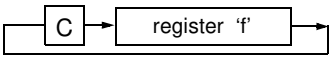

SLEEP	Enter SLEEP Mode
Syntax:	[*label*] SLEEP
Operands:	None
Operation:	00h → WDT; 0 → WDT prescaler; 1 → $\overline{TO}$; 0 → $\overline{PD}$
Status Affected:	$\overline{TO}$, $\overline{PD}$, RBWUF
Description:	Time-out Status bit ($\overline{TO}$) is set. The Power-down Status bit ($\overline{PD}$) is cleared. RBWUF is unaffected. The WDT and its prescaler are cleared. The processor is put into Sleep mode with the oscillator stopped. See **Section 7.9 “Power-down Mode (Sleep)”** on Sleep for more details.

SUBWF	Subtract W from f
Syntax:	[*label*] SUBWF f,d
Operands:	$0 \le f \le 31$ $d \in [0,1]$
Operation:	(f) – (W) → (dest)
Status Affected:	C, DC, Z
Description:	Subtract (2’s complement method) the W register from register ‘f’. If ‘d’ is ‘0’, the result is stored in the W register. If ‘d’ is ‘1’, the result is stored back in register ‘f’.

SWAPF	Swap Nibbles in f
Syntax:	[*label*] SWAPF f,d
Operands:	$0 \le f \le 31$ $d \in [0,1]$
Operation:	(f<3:0>) → (dest<7:4>); (f<7:4>) → (dest<3:0>)
Status Affected:	None
Description:	The upper and lower nibbles of register ‘f’ are exchanged. If ‘d’ is ‘0’, the result is placed in W register. If ‘d’ is ‘1’, the result is placed in register ‘f’.

TRIS	Load TRIS Register
Syntax:	[*label*] TRIS f
Operands:	f = 6
Operation:	(W) → TRIS register f
Status Affected:	None
Description:	TRIS register 'f' (f = 6 or 7) is loaded with the contents of the W register

XORLW	Exclusive OR literal with W
Syntax:	[*label*] XORLW k
Operands:	$0 \le k \le 255$
Operation:	(W) .XOR. k → (W)
Status Affected:	Z
Description:	The contents of the W register are XOR'ed with the eight-bit literal 'k'. The result is placed in the W register.

XORWF	Exclusive OR W with f
Syntax:	[*label*] XORWF f,d
Operands:	$0 \le f \le 31$ $d \in [0,1]$
Operation:	(W) .XOR. (f) → (dest)
Status Affected:	Z
Description:	Exclusive OR the contents of the W register with register 'f'. If 'd' is '0', the result is stored in the W register. If 'd' is '1', the result is stored back in register 'f'.

© 2009 Microchip Technology Inc.

9.0 DEVELOPMENT SUPPORT

The PIC® microcontrollers are supported with a full range of hardware and software development tools:

- Integrated Development Environment
  - MPLAB® IDE Software
- Assemblers/Compilers/Linkers
  - MPASM™ Assembler
  - MPLAB C18 and MPLAB C30 C Compilers
  - MPLINK™ Object Linker/ MPLIB™ Object Librarian
  - MPLAB ASM30 Assembler/Linker/Library
- Simulators
  - MPLAB SIM Software Simulator
- Emulators
  - MPLAB ICE 2000 In-Circuit Emulator
  - MPLAB REAL ICE™ In-Circuit Emulator
- In-Circuit Debugger
  - MPLAB ICD 2
- Device Programmers
  - PICSTART® Plus Development Programmer
  - MPLAB PM3 Device Programmer
  - PICkit™ 2 Development Programmer
- Low-Cost Demonstration and Development Boards and Evaluation Kits

9.1 MPLAB Integrated Development Environment Software

The MPLAB IDE software brings an ease of software development previously unseen in the 8/16-bit micro-controller market. The MPLAB IDE is a Windows® operating system-based application that contains:

- A single graphical interface to all debugging tools
  - Simulator
  - Programmer (sold separately)
  - Emulator (sold separately)
  - In-Circuit Debugger (sold separately)
- A full-featured editor with color-coded context
- A multiple project manager
- Customizable data windows with direct edit of contents
- High-level source code debugging
- Visual device initializer for easy register initialization
- Mouse over variable inspection
- Drag and drop variables from source to watch windows
- Extensive on-line help
- Integration of select third party tools, such as HI-TECH Software C Compilers and IAR C Compilers

The MPLAB IDE allows you to:

- Edit your source files (either assembly or C)
- One touch assemble (or compile) and download to PIC MCU emulator and simulator tools (automatically updates all project information)
- Debug using:
  - Source files (assembly or C)
  - Mixed assembly and C
  - Machine code

MPLAB IDE supports multiple debugging tools in a single development paradigm, from the cost-effective simulators, through low-cost in-circuit debuggers, to full-featured emulators. This eliminates the learning curve when upgrading to tools with increased flexibility and power.

9.2 MPASM Assembler

The MPASM Assembler is a full-featured, universal macro assembler for all PIC MCUs.

The MPASM Assembler generates relocatable object files for the MPLINK Object Linker, Intel® standard HEX files, MAP files to detail memory usage and symbol reference, absolute LST files that contain source lines and generated machine code and COFF files for debugging.

The MPASM Assembler features include:

- Integration into MPLAB IDE projects
- User-defined macros to streamline assembly code
- Conditional assembly for multi-purpose source files
- Directives that allow complete control over the assembly process

9.3 MPLAB C18 and MPLAB C30 C Compilers

The MPLAB C18 and MPLAB C30 Code Development Systems are complete ANSI C compilers for Microchip's PIC18 and PIC24 families of microcontrollers and the dsPIC30 and dsPIC33 family of digital signal controllers. These compilers provide powerful integration capabilities, superior code optimization and ease of use not found with other compilers.

For easy source level debugging, the compilers provide symbol information that is optimized to the MPLAB IDE debugger.

9.4 MPLINK Object Linker/ MPLIB Object Librarian

The MPLINK Object Linker combines relocatable objects created by the MPASM Assembler and the MPLAB C18 C Compiler. It can link relocatable objects from precompiled libraries, using directives from a linker script.

The MPLIB Object Librarian manages the creation and modification of library files of precompiled code. When a routine from a library is called from a source file, only the modules that contain that routine will be linked in with the application. This allows large libraries to be used efficiently in many different applications.

The object linker/library features include:

- Efficient linking of single libraries instead of many smaller files
- Enhanced code maintainability by grouping related modules together
- Flexible creation of libraries with easy module listing, replacement, deletion and extraction

9.5 MPLAB ASM30 Assembler, Linker and Librarian

MPLAB ASM30 Assembler produces relocatable machine code from symbolic assembly language for dsPIC30F devices. MPLAB C30 C Compiler uses the assembler to produce its object file. The assembler generates relocatable object files that can then be archived or linked with other relocatable object files and archives to create an executable file. Notable features of the assembler include:

- Support for the entire dsPIC30F instruction set
- Support for fixed-point and floating-point data
- Command line interface
- Rich directive set
- Flexible macro language
- MPLAB IDE compatibility

9.6 MPLAB SIM Software Simulator

The MPLAB SIM Software Simulator allows code development in a PC-hosted environment by simulating the PIC MCUs and dsPIC® DSCs on an instruction level. On any given instruction, the data areas can be examined or modified and stimuli can be applied from a comprehensive stimulus controller. Registers can be logged to files for further run-time analysis. The trace buffer and logic analyzer display extend the power of the simulator to record and track program execution, actions on I/O, most peripherals and internal registers.

The MPLAB SIM Software Simulator fully supports symbolic debugging using the MPLAB C18 and MPLAB C30 C Compilers, and the MPASM and MPLAB ASM30 Assemblers. The software simulator offers the flexibility to develop and debug code outside of the hardware laboratory environment, making it an excellent, economical software development tool.

© 2009 Microchip Technology Inc.

9.7 MPLAB ICE 2000 High-Performance In-Circuit Emulator

The MPLAB ICE 2000 In-Circuit Emulator is intended to provide the product development engineer with a complete microcontroller design tool set for PIC microcontrollers. Software control of the MPLAB ICE 2000 In-Circuit Emulator is advanced by the MPLAB Integrated Development Environment, which allows editing, building, downloading and source debugging from a single environment.

The MPLAB ICE 2000 is a full-featured emulator system with enhanced trace, trigger and data monitoring features. Interchangeable processor modules allow the system to be easily reconfigured for emulation of different processors. The architecture of the MPLAB ICE 2000 In-Circuit Emulator allows expansion to support new PIC microcontrollers.

The MPLAB ICE 2000 In-Circuit Emulator system has been designed as a real-time emulation system with advanced features that are typically found on more expensive development tools. The PC platform and Microsoft® Windows® 32-bit operating system were chosen to best make these features available in a simple, unified application.

9.8 MPLAB REAL ICE In-Circuit Emulator System

MPLAB REAL ICE In-Circuit Emulator System is Microchip's next generation high-speed emulator for Microchip Flash DSC and MCU devices. It debugs and programs PIC® Flash MCUs and dsPIC® Flash DSCs with the easy-to-use, powerful graphical user interface of the MPLAB Integrated Development Environment (IDE), included with each kit.

The MPLAB REAL ICE probe is connected to the design engineer's PC using a high-speed USB 2.0 interface and is connected to the target with either a connector compatible with the popular MPLAB ICD 2 system (RJ11) or with the new high-speed, noise tolerant, Low-Voltage Differential Signal (LVDS) interconnection (CAT5).

MPLAB REAL ICE is field upgradeable through future firmware downloads in MPLAB IDE. In upcoming releases of MPLAB IDE, new devices will be supported, and new features will be added, such as software breakpoints and assembly code trace. MPLAB REAL ICE offers significant advantages over competitive emulators including low-cost, full-speed emulation, real-time variable watches, trace analysis, complex breakpoints, a ruggedized probe interface and long (up to three meters) interconnection cables.

9.9 MPLAB ICD 2 In-Circuit Debugger

Microchip's In-Circuit Debugger, MPLAB ICD 2, is a powerful, low-cost, run-time development tool, connecting to the host PC via an RS-232 or high-speed USB interface. This tool is based on the Flash PIC MCUs and can be used to develop for these and other PIC MCUs and dsPIC DSCs. The MPLAB ICD 2 utilizes the in-circuit debugging capability built into the Flash devices. This feature, along with Microchip's In-Circuit Serial Programming™ (ICSP™) protocol, offers cost-effective, in-circuit Flash debugging from the graphical user interface of the MPLAB Integrated Development Environment. This enables a designer to develop and debug source code by setting breakpoints, single stepping and watching variables, and CPU status and peripheral registers. Running at full speed enables testing hardware and applications in real time. MPLAB ICD 2 also serves as a development programmer for selected PIC devices.

9.10 MPLAB PM3 Device Programmer

The MPLAB PM3 Device Programmer is a universal, CE compliant device programmer with programmable voltage verification at V_{DDMIN} and V_{DDMAX} for maximum reliability. It features a large LCD display (128 x 64) for menus and error messages and a modular, detachable socket assembly to support various package types. The ICSP™ cable assembly is included as a standard item. In Stand-Alone mode, the MPLAB PM3 Device Programmer can read, verify and program PIC devices without a PC connection. It can also set code protection in this mode. The MPLAB PM3 connects to the host PC via an RS-232 or USB cable. The MPLAB PM3 has high-speed communications and optimized algorithms for quick programming of large memory devices and incorporates an SD/MMC card for file storage and secure data applications.

9.11 PICSTART Plus Development Programmer

The PICSTART Plus Development Programmer is an easy-to-use, low-cost, prototype programmer. It connects to the PC via a COM (RS-232) port. MPLAB Integrated Development Environment software makes using the programmer simple and efficient. The PICSTART Plus Development Programmer supports most PIC devices in DIP packages up to 40 pins. Larger pin count devices, such as the PIC16C92X and PIC17C76X, may be supported with an adapter socket. The PICSTART Plus Development Programmer is CE compliant.

9.12 PICkit 2 Development Programmer

The PICkit™ 2 Development Programmer is a low-cost programmer and selected Flash device debugger with an easy-to-use interface for programming many of Microchip's baseline, mid-range and PIC18F families of Flash memory microcontrollers. The PICkit 2 Starter Kit includes a prototyping development board, twelve sequential lessons, software and HI-TECH's PICC™ Lite C compiler, and is designed to help get up to speed quickly using PIC® microcontrollers. The kit provides everything needed to program, evaluate and develop applications using Microchip's powerful, mid-range Flash memory family of microcontrollers.

9.13 Demonstration, Development and Evaluation Boards

A wide variety of demonstration, development and evaluation boards for various PIC MCUs and dsPIC DSCs allows quick application development on fully functional systems. Most boards include prototyping areas for adding custom circuitry and provide application firmware and source code for examination and modification.

The boards support a variety of features, including LEDs, temperature sensors, switches, speakers, RS-232 interfaces, LCD displays, potentiometers and additional EEPROM memory.

The demonstration and development boards can be used in teaching environments, for prototyping custom circuits and for learning about various microcontroller applications.

In addition to the PICDEM™ and dsPICDEM™ demonstration/development board series of circuits, Microchip has a line of evaluation kits and demonstration software for analog filter design, KEELOQ® security ICs, CAN, IrDA®, PowerSmart battery management, SEEVAL® evaluation system, Sigma-Delta ADC, flow rate sensing, plus many more.

Check the Microchip web page (www.microchip.com) for the complete list of demonstration, development and evaluation kits.

© 2009 Microchip Technology Inc.

10.0 ELECTRICAL CHARACTERISTICS

Absolute Maximum Ratings(†)

Ambient temperature under bias ..... -40°C to +125°C
Storage temperature ..... -65°C to +150°C
Voltage on V_{DD} with respect to V_{SS} ..... 0 to +6.5V
Voltage on $\overline{MCLR}$ with respect to V_{SS} ..... 0 to +13.5V
Voltage on all other pins with respect to V_{SS} ..... -0.3V to (V_{DD} + 0.3V)
Total power dissipation(1) ..... 800 mW
Max. current out of V_{SS} pin ..... 200 mA
Max. current into V_{DD} pin ..... 150 mA
Input clamp current, I_{IK} (V_I < 0 or V_I > V_{DD}) ..... ±20 mA
Output clamp current, I_{OK} (V_O < 0 or V_O > V_{DD}) ..... ±20 mA
Max. output current sunk by any I/O pin ..... 25 mA
Max. output current sourced by any I/O pin ..... 25 mA
Max. output current sourced by I/O port ..... 75 mA
Max. output current sunk by I/O port ..... 75 mA

Note 1: Power dissipation is calculated as follows: $P_{DIS} = V_{DD} \times \{I_{DD} - \sum I_{OH}\} + \sum \{(V_{DD} - V_{OH}) \times I_{OH}\} + \sum(V_{OL} \times I_{OL})$

†NOTICE: Stresses above those listed under “Absolute Maximum Ratings” may cause permanent damage to the device. This is a stress rating only and functional operation of the device at those or any other conditions above those indicated in the operation listings of this specification is not implied. Exposure to maximum rating conditions for extended periods may affect device reliability.

FIGURE 10-1: PIC12F508/509/16F505 VOLTAGE-FREQUENCY GRAPH, -40°C ≤ TA ≤ +125°C

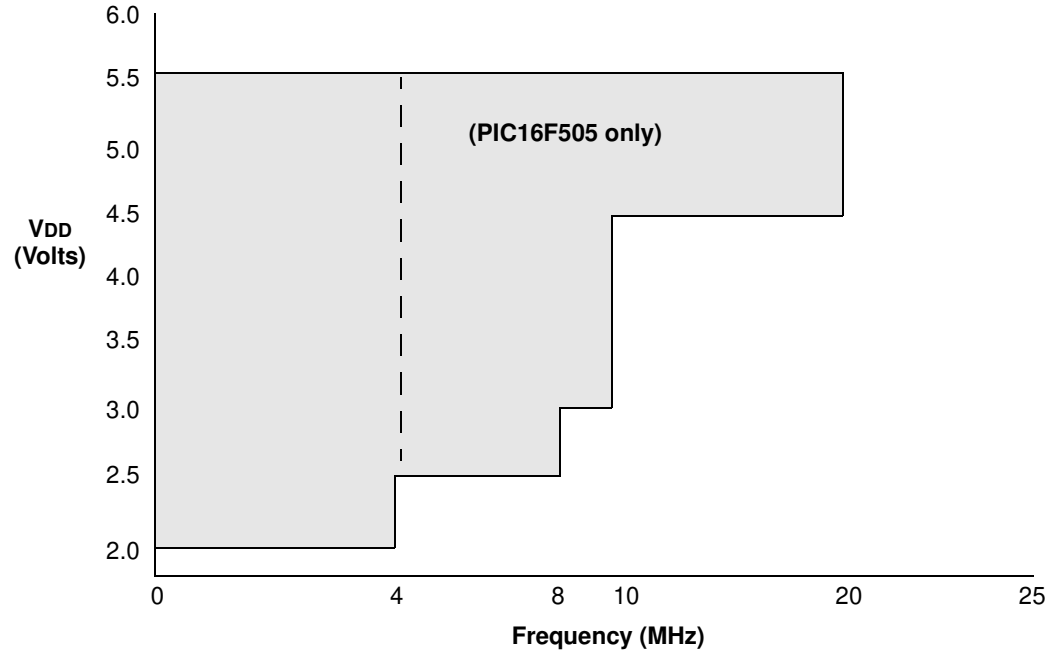

FIGURE 10-2: MAXIMUM OSCILLATOR FREQUENCY TABLE

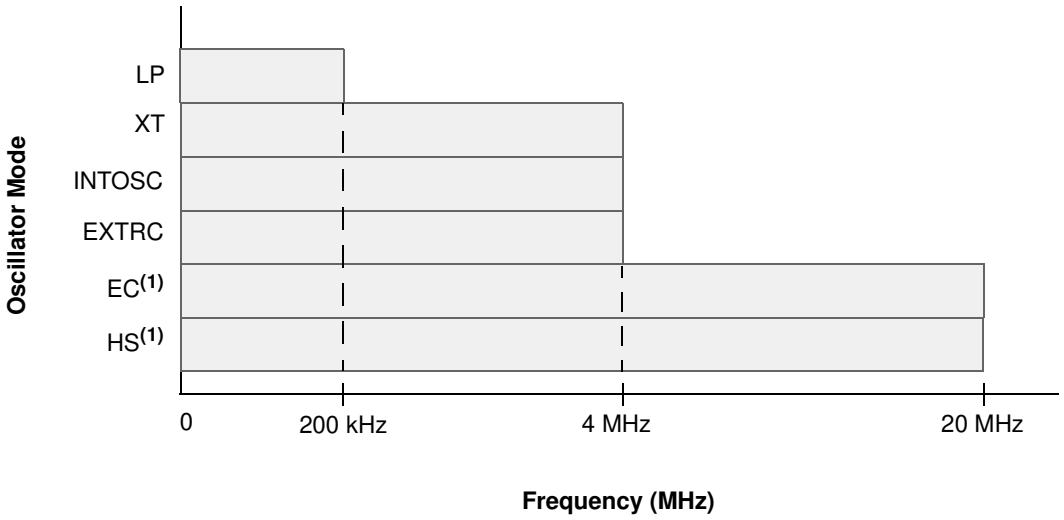

Note 1: For PIC16F505 only.

© 2009 Microchip Technology Inc.

10.1 DC Characteristics: PIC12F508/509/16F505 (Industrial)

DC Characteristics			Standard Operating Conditions (unless otherwise specified) Operating Temperature -40°C ≤ TA ≤ +85°C (industrial)				
Param No.	**Sym.**	**Characteristic**	**Min.**	**Typ(1)**	**Max.**	**Units**	**Conditions**
D001	VDD	**Supply Voltage**	2.0		5.5	V	See Figure 10-1
D002	VDR	**RAM Data Retention Voltage(2)**	—	1.5*	—	V	Device in Sleep mode
D003	VPOR	**VDD Start Voltage** to ensure Power-on Reset	—	Vss	—	V	See **Section 7.4 "Power-on Reset (POR)"** for details
D004	SVDD	**VDD Rise Rate** to ensure Power-on Reset	0.05*	—	—	V/ms	See **Section 7.4 "Power-on Reset (POR)"** for details
D010	IDD	**Supply Current(3,4)**	— —	175 0.625	275 1.1	µA mA	FOSC = 4 MHz, VDD = 2.0V FOSC = 4 MHz, VDD = 5.0V
			— —	500 1.5	650 2.2	µA mA	FOSC = 10 MHz, VDD = 3.0V FOSC = 20 MHz, VDD = 5.0V (PIC16F505 only)
			— —	11 38	20 54	µA µA	FOSC = 32 kHz, VDD = 2.0V FOSC = 32 kHz, VDD = 5.0V
D020	IPD	**Power-down Current(5)**	— —	0.1 0.35	1.2 2.4	µA µA	VDD = 2.0V VDD = 5.0V
D022	IWDT	**WDT Current(5)**	— —	1.0 7.0	3.0 16.0	µA µA	VDD = 2.0V VDD = 5.0V

* These parameters are characterized but not tested.

Note 1: Data in the Typical ("Typ") column is based on characterization results at 25°C. This data is for design guidance only and is not tested.

2: This is the limit to which VDD can be lowered in Sleep mode without losing RAM data.

3: The supply current is mainly a function of the operating voltage and frequency. Other factors such as bus loading, oscillator type, bus rate, internal code execution pattern and temperature also have an impact on the current consumption.

4: The test conditions for all IDD measurements in active operation mode are:
OSC1 = external square wave, from rail-to-rail; all I/O pins tri-stated, pulled to VSS, T0CKI = VDD, $\overline{\text{MCLR}}$ = VDD; WDT enabled/disabled as specified.

5: For standby current measurements, the conditions are the same as IDD, except that the device is in Sleep mode. If a module current is listed, the current is for that specific module enabled and the device in Sleep.

10.2 DC Characteristics: PIC12F508/509/16F505 (Extended)

DC Characteristics			Standard Operating Conditions (unless otherwise specified) Operating Temperature -40°C ≤ TA ≤ +125°C (extended)				
Param No.	**Sym.**	**Characteristic**	**Min.**	**Typ(1)**	**Max.**	**Units**	**Conditions**
D001	VDD	**Supply Voltage**	2.0		5.5	V	See Figure 10-1
D002	VDR	**RAM Data Retention Voltage(2)**	—	1.5*	—	V	Device in Sleep mode
D003	VPOR	**VDD Start Voltage** to ensure Power-on Reset	—	Vss	—	V	See **Section 7.4 "Power-on Reset (POR)"** for details
D004	SVDD	**VDD Rise Rate** to ensure Power-on Reset	0.05*	—	—	V/ms	See **Section 7.4 "Power-on Reset (POR)"** for details
D010	IDD	**Supply Current(3,4)**	— —	175 0.625	275 1.1	µA mA	FOSC = 4 MHz, VDD = 2.0V FOSC = 4 MHz, VDD = 5.0V
			— —	500 1.5	650 2.2	µA mA	FOSC = 10 MHz, VDD = 3.0V FOSC = 20 MHz, VDD = 5.0V (PIC16F515 only)
			— —	11 38	26 110	µA µA	FOSC = 32 kHz, VDD = 2.0V FOSC = 32 kHz, VDD = 5.0V
D020	IPD	**Power-down Current(5)**	— —	0.1 0.35	9.0 15.0	µA µA	VDD = 2.0V VDD = 5.0V
D022	IWDT	**WDT Current(5)**	— —	1.0 7.0	18 22	µA µA	VDD = 2.0V VDD = 5.0V

* These parameters are characterized but not tested.

Note 1: Data in the Typical ("Typ") column is based on characterization results at 25°C. This data is for design guidance only and is not tested.

2: This is the limit to which VDD can be lowered in Sleep mode without losing RAM data.

3: The supply current is mainly a function of the operating voltage and frequency. Other factors such as bus loading, oscillator type, bus rate, internal code execution pattern and temperature also have an impact on the current consumption.

4: The test conditions for all IDD measurements in active operation mode are:
OSC1 = external square wave, from rail-to-rail; all I/O pins tri-stated, pulled to VSS, T0CKI = VDD, $\overline{\text{MCLR}}$ = VDD; WDT enabled/disabled as specified.

5: For standby current measurements, the conditions are the same as IDD, except that the device is in Sleep mode. If a module current is listed, the current is for that specific module enabled and the device in Sleep.

© 2009 Microchip Technology Inc.

TABLE 10-1: DC CHARACTERISTICS: PIC12F508/509/16F505 (Industrial, Extended)

DC CHARACTERISTICS			Standard Operating Conditions (unless otherwise specified) Operating temperature -40°C ≤ TA ≤ +85°C (industrial) -40°C ≤ TA ≤ +125°C (extended) Operating voltage VDD range as described in DC specification				
Param No.	**Sym.**	**Characteristic**	**Min.**	**Typ†**	**Max.**	**Units**	**Conditions**
	VIL	**Input Low Voltage**					
		I/O ports:					
D030		with TTL buffer	Vss	—	0.8V	V	For all 4.5 ≤ VDD ≤ 5.5V
D030A			Vss	—	0.15 VDD	V	Otherwise
D031		with Schmitt Trigger buffer	Vss	—	0.15 VDD	V	
D032		$\overline{\text{MCLR}}$, T0CKI	Vss	—	0.15 VDD	V	
D033		OSC1 (in EXTRC)	Vss	—	0.15 VDD	V	**(Note1)**
D033		OSC1 (in HS)	Vss	—	0.3 VDD	V	**(Note1)**
D033		OSC1 (in XT and LP)	Vss	—	0.3	V	**(Note1)**
	VIH	**Input High Voltage**					
		I/O ports:		—			
D040		with TTL buffer	2.0	—	VDD	V	4.5 ≤ VDD ≤ 5.5V
D040A			0.25 VDD + 0.8	—	VDD	V	Otherwise
D041		with Schmitt Trigger buffer	0.85 VDD	—	VDD	V	For entire VDD range
D042		MCLR, T0CKI	0.85 VDD	—	VDD	V	
D043		OSC1 (in EXTRC)	0.85 VDD	—	VDD	V	**(Note1)**
D043		OSC1 (in HS)	0.7 VDD	—	VDD	V	**(Note1)**
D043		OSC1 (in XT and LP)	1.6	—	VDD	V	
D070	IPUR	**GPIO/PORTB weak pull-up current(4)**	50	250	400	μA	VDD = 5V, VPIN = VSS
	IIL	**Input Leakage Current(2), (3)**					
D060		I/O ports	—	—	± 1	μA	Vss ≤ VPIN ≤ VDD, Pin at high-impedance
D061		GP3/RB3/$\overline{\text{MCLR}}$I(5)	—	± 0.7	± 5	μA	Vss ≤ VPIN ≤ VDD
D063		OSC1	—	—	± 5	μA	Vss ≤ VPIN ≤ VDD, XT, HS and LP oscillator configuration
		Output Low Voltage					
D080		I/O ports/CLKOUT	—	—	0.6	V	IOL = 8.5 mA, VDD = 4.5V, -40°C to +85°C
D080A			—	—	0.6	V	IOL = 7.0 mA, VDD = 4.5V, -40°C to +125°C
D083		OSC2	—	—	0.6	V	IOL = 1.6 mA, VDD = 4.5V, -40°C to +85°C
D083A			—	—	0.6	V	IOL = 1.2 mA, VDD = 4.5V, -40°C to +125°C
		Output High Voltage					
D090		I/O ports/CLKOUT(3)	VDD – 0.7	—	—	V	IOH = -3.0 mA, VDD = 4.5V, -40°C to +85°C
D090A			VDD – 0.7	—	—	V	IOH = -2.5 mA, VDD = 4.5V, -40°C to +125°C
D092		OSC2	VDD – 0.7	—	—	V	IOH = -1.3 mA, VDD = 4.5V, -40°C to +85°C
D092A			VDD – 0.7	—	—	V	IOH = -1.0 mA, VDD = 4.5V, -40°C to +125°C
		Capacitive Loading Specs on Output Pins					
D100		OSC2 pin	—	—	15	pF	In XT, HS and LP modes when external clock is used to drive OSC1.
D101		All I/O pins and OSC2	—	—	50	pF	

† Data in "Typ" column is at 5V, 25°C unless otherwise stated. These parameters are for design guidance only and are not tested.

Note 1: In EXTRC oscillator configuration, the OSC1/CLKIN pin is a Schmitt Trigger input. It is not recommended that the PIC12F508/509/16F505 be driven with external clock in RC mode.

2: The leakage current on the $\overline{\text{MCLR}}$ pin is strongly dependent on the applied voltage level. The specified levels represent normal operating conditions. Higher leakage current may be measured at different input voltages.

3: Negative current is defined as coming out of the pin.

4: The specification applies to all weak pull-up devices, including the weak pull-up on GP3/$\overline{\text{MCLR}}$. The current listed will be the same whether GP3/$\overline{\text{MCLR}}$ is configured as GP3 with a weak pull-up or enabled as $\overline{\text{MCLR}}$.

5: This specification applies when GP3/RB3/$\overline{\text{MCLR}}$ is configured as an input with pull-up disabled. The leakage current of the $\overline{\text{MCLR}}$ circuit is higher than the standard I/O logic.

TABLE 10-2: PULL-UP RESISTOR RANGES – PIC12F508/509/16F505

VDD (Volts)	Temperature (°C)	Min.	Typ.	Max.
GP0(RBO)/GP1(RB1)				
2.0	–40	73K	105K	186K
	25	73K	113K	187K
	85	82K	123K	190K
	125	86K	132k	190K
5.5	–40	15K	21K	33K
	25	15K	22K	34K
	85	19K	26k	35K
	125	23K	29K	35K
GP3(RB3)				
2.0	–40	63K	81K	96K
	25	77K	93K	116K
	85	82K	96k	116K
	125	86K	100K	119K
5.5	–40	16K	20k	22K
	25	16K	21K	23K
	85	24K	25k	28K
	125	26K	27K	29K

* These parameters are characterized but not tested.

© 2009 Microchip Technology Inc.

10.3 Timing Parameter Symbology and Load Conditions – PIC12F508/509/16F505

The timing parameter symbols have been created following one of the following formats:

1. TppS2ppS
2. TppS

T			
F	Frequency	T	Time

Lowercase subscripts (pp) and their meanings:

pp			
2	to	mc	$\overline{\text{MCLR}}$
ck	CLKOUT	osc	Oscillator
cy	Cycle time	os	OSC1
drt	Device Reset Timer	t0	T0CKI
io	I/O port	wdt	Watchdog Timer

Uppercase letters and their meanings:

S			
F	Fall	P	Period
H	High	R	Rise
I	Invalid (high-impedance)	V	Valid
L	Low	Z	High-impedance

FIGURE 10-3: LOAD CONDITIONS – PIC12F508/509/16F505

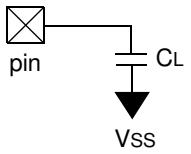

Legend:

CL = 50 pF for all pins except OSC2

15 pF for OSC2 in XT, HS or LP modes when external clock is used to drive OSC1

FIGURE 10-4: EXTERNAL CLOCK TIMING – PIC12F508/509/16F505

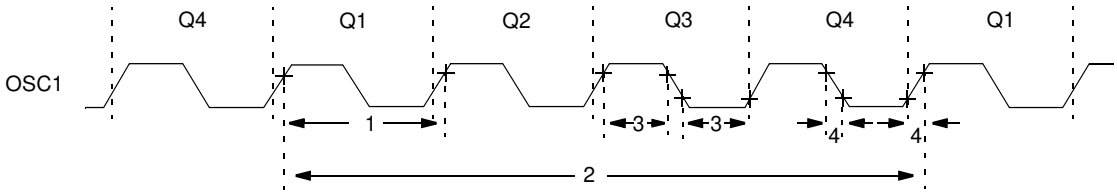

TABLE 10-3: EXTERNAL CLOCK TIMING REQUIREMENTS – PIC12F508/509/16F505

AC CHARACTERISTICS			**Standard Operating Conditions (unless otherwise specified)** Operating Temperature -40°C ≤ TA ≤ +85°C (industrial), -40°C ≤ TA ≤ +125°C (extended) Operating Voltage VDD range is described in **Section 10.1 "Power-on Reset (POR)"**				
Param No.	**Sym.**	**Characteristic**	**Min.**	**Typ(1)**	**Max.**	**Units**	**Conditions**
1A	FOSC	External CLKIN Frequency(2)	DC	—	4	MHz	XT Oscillator mode
			DC	—	20	MHz	EC, HS Oscillator mode (PIC16F505 only)
			DC	—	200	kHz	LP Oscillator mode
		Oscillator Frequency(2)	—	—	4	MHz	EXTRC Oscillator mode
			0.1	—	4	MHz	XT Oscillator mode
			4	—	20	MHz	HS Oscillator mode (PIC16F505 only)
			—	—	200	kHz	LP Oscillator mode
1	TOSC	External CLKIN Period(2)	250	—	—	ns	XT Oscillator mode
			50	—	—	ns	EC, HS Oscillator mode (PIC16F505 only)
			5	—	—	µs	LP Oscillator mode
		Oscillator Period(2)	250	—	—	ns	EXTRC Oscillator mode
			250	—	10,000	ns	XT Oscillator mode
			50	—	250	ns	HS Oscillator mode (PIC16F505 only)
			5	—	—	µs	LP Oscillator mode
2	TCY	Instruction Cycle Time	200	4/FOSC	—	ns	
3	TosL, TosH	Clock in (OSC1) Low or High Time	50*	—	—	ns	XT Oscillator
			2*	—	—	µs	LP Oscillator
			10*	—	—	ns	EC, HS Oscillator (PIC16F505 only)
4	TosR, TosF	Clock in (OSC1) Rise or Fall Time	—	—	25*	ns	XT Oscillator
			—	—	50*	ns	LP Oscillator
			—	—	15*	ns	EC, HS Oscillator (PIC16F505 only)

* These parameters are characterized but not tested.

Note 1: Data in the Typical ("Typ") column is at 5V, 25°C unless otherwise stated. These parameters are for design guidance only and are not tested.

2: All specified values are based on characterization data for that particular oscillator type under standard operating conditions with the device executing code. Exceeding these specified limits may result in an unstable oscillator operation and/or higher than expected current consumption. When an external clock input is used, the "max" cycle time limit is "DC" (no clock) for all devices.

© 2009 Microchip Technology Inc.

TABLE 10-4: CALIBRATED INTERNAL RC FREQUENCIES – PIC12F508/509/16F505

AC CHARACTERISTICS			Standard Operating Conditions (unless otherwise specified) Operating Temperature -40°C ≤ TA ≤ +85°C (industrial), -40°C ≤ TA ≤ +125°C (extended)					
Param No.	**Sym.**	**Characteristic**	**Freq Tolerance**	**Min.**	**Typ†**	**Max.**	**Units**	**Conditions**
F10	FOSC	Internal Calibrated INTOSC Frequency(1)	± 1%	3.96	4.00	4.04	MHz	VDD = 3.5V, TA = 25°C
			± 2%	3.92	4.00	4.08	MHz	2.5V ≤ VDD ≤ 5.5V 0°C ≤ TA ≤ +85°C
			± 5%	3.80	4.00	4.20	MHz	2.0V ≤ VDD ≤ 5.5V -40°C ≤ TA ≤ +85°C (Ind.) -40°C ≤ TA ≤ +125°C (Ext.)

* These parameters are characterized but not tested.

† Data in the Typical ("Typ") column is at 5V, 25°C unless otherwise stated. These parameters are for design guidance only and are not tested.

Note 1: To ensure these oscillator frequency tolerances, VDD and VSS must be capacitively decoupled as close to the device as possible. 0.1 uF and 0.01 uF values in parallel are recommended.

FIGURE 10-5: I/O TIMING – PIC12F508/509/16F505

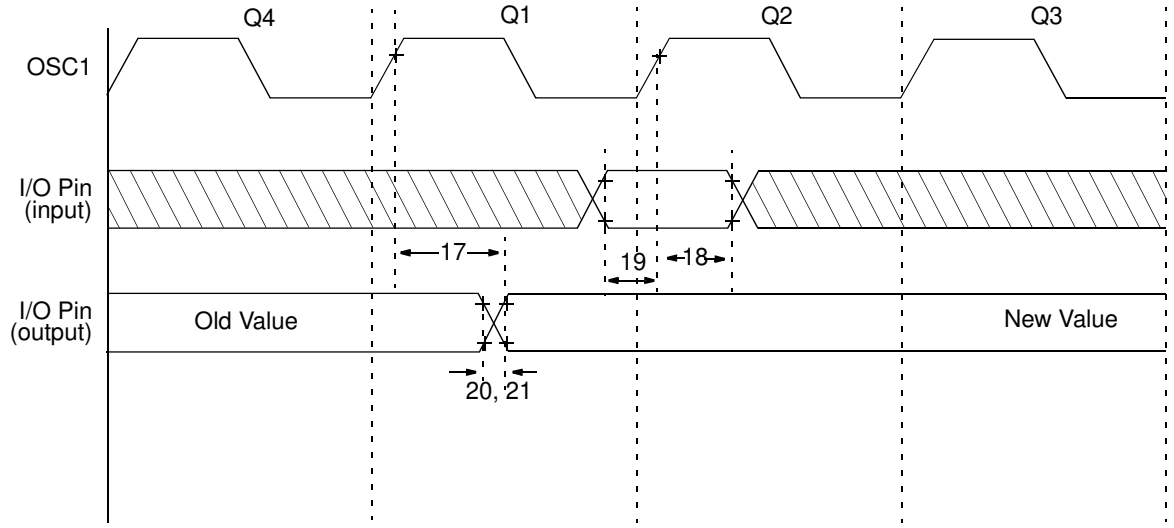

Note: All tests must be done with specified capacitive loads (see data sheet) 50 pF on I/O pins and CLKOUT.

TABLE 10-5: TIMING REQUIREMENTS – PIC12F508/509/16F505

AC CHARACTERISTICS		**Standard Operating Conditions (unless otherwise specified)** Operating Temperature -40°C ≤ TA ≤ +85°C (industrial) -40°C ≤ TA ≤ +125°C (extended) Operating Voltage VDD range is described in **Section 10.1 "Power-on Reset (POR)"**				
Param No.	**Sym.**	**Characteristic**	**Min.**	**Typ(1)**	**Max.**	**Units**
17	TOSH2IOV	OSC1↑ (Q1 cycle) to Port Out Valid(2), (3)	—	—	100*	ns
18	TOSH2IOI	OSC1↑ (Q2 cycle) to Port Input Invalid (I/O in hold time)(2)	50	—	—	ns
19	TIOV2OSH	Port Input Valid to OSC1↑ (I/O in setup time)	20	—	—	ns
20	TIOR	Port Output Rise Time(3)	—	10	25**	ns
21	TIOF	Port Output Fall Time(3)	—	10	25**	ns

* These parameters are characterized but not tested.

** These parameters are design targets and are not tested.

Note 1: Data in the Typical ("Typ") column is at 5V, 25°C unless otherwise stated. These parameters are for design guidance only and are not tested.

2: Measurements are taken in EXTRC mode.

3: See Figure 10-3 for loading conditions.

FIGURE 10-6: RESET, WATCHDOG TIMER AND DEVICE RESET TIMER TIMING – PIC12F508/509/16F505

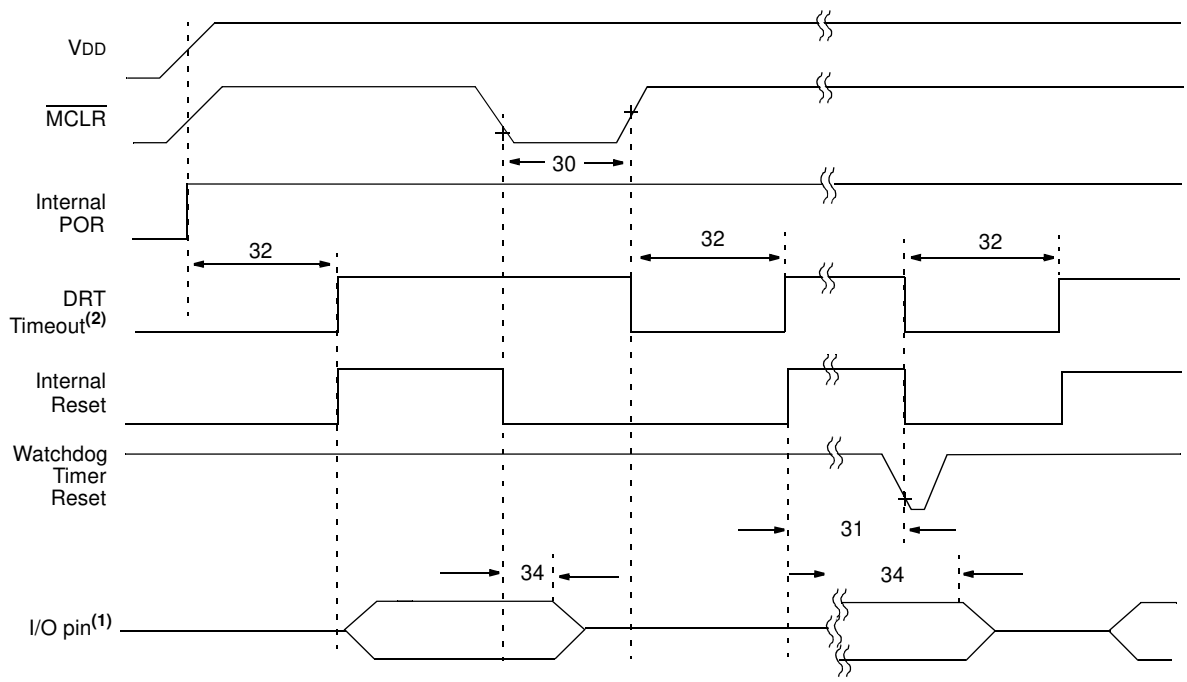

Note 1: I/O pins must be taken out of High-Impedance mode by enabling the output drivers in software.

2: Runs in MCLR or WDT Reset only in XT, LP and HS (PIC16F505) modes.

© 2009 Microchip Technology Inc.

TABLE 10-6: RESET, WATCHDOG TIMER AND DEVICE RESET TIMER – PIC12F508/509/16F505

AC CHARACTERISTICS			Standard Operating Conditions (unless otherwise specified) Operating Temperature -40°C ≤ TA ≤ +85°C (industrial) -40°C ≤ TA ≤ +125°C (extended)				
Param No.	**Sym.**	**Characteristic**	**Min.**	**Typ(1)**	**Max.**	**Units**	**Conditions**
30	TMCL	$\overline{\text{MCLR}}$ Pulse Width (low)	2000*	—	—	ns	VDD = 5.0V
31	TWDT	Watchdog Timer Time-out Period (no prescaler)	9* 9*	18* 18*	30* 40*	ms ms	VDD = 5.0V (Industrial) VDD = 5.0V (Extended)
32	TDRT	Device Reset Timer Period(2)	9* 9*	18* 18*	30* 40*	ms ms	VDD = 5.0V (Industrial) VDD = 5.0V (Extended)
34	TIOZ	I/O High-impedance from $\overline{\text{MCLR}}$ low	—	—	2000*	ns	

* These parameters are characterized but not tested.

Note 1: Data in the Typical ("Typ") column is at 5V, 25°C unless otherwise stated. These parameters are for design guidance only and are not tested.

FIGURE 10-7: TIMER0 CLOCK TIMINGS – PIC12F508/509/16F505

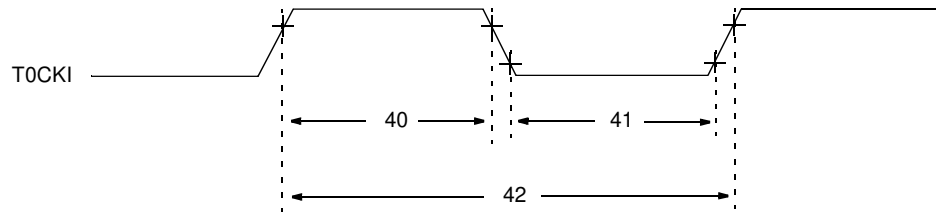

TABLE 10-7: TIMER0 CLOCK REQUIREMENTS – PIC12F508/509/16F505

AC CHARACTERISTICS				Standard Operating Conditions (unless otherwise specified) Operating Temperature -40°C ≤ TA ≤ +85°C (industrial) -40°C ≤ TA ≤ +125°C (extended) Operating Voltage VDD range is described in **Section 10.1 "Power-on Reset (POR)"**				
Param No.	**Sym.**	**Characteristic**		**Min.**	**Typ(1)**	**Max.**	**Units**	**Conditions**
40	Tt0H	T0CKI High Pulse Width	No Prescaler	0.5 TCY + 20*	—	—	ns	
			With Prescaler	10*	—	—	ns	
41	Tt0L	T0CKI Low Pulse Width	No Prescaler	0.5 TCY + 20*	—	—	ns	
			With Prescaler	10*	—	—	ns	
42	Tt0P	T0CKI Period		20 or TCY + 40* N	—	—	ns	Whichever is greater. N = Prescale Value (1, 2, 4,..., 256)

* These parameters are characterized but not tested.

Note 1: Data in the Typical ("Typ") column is at 5V, 25°C unless otherwise stated. These parameters are for design guidance only and are not tested.

© 2009 Microchip Technology Inc.

11.0 DC AND AC CHARACTERISTICS GRAPHS AND CHARTS

Note:	The graphs and tables provided following this note are a statistical summary based on a limited number of samples and are provided for informational purposes only. The performance characteristics listed herein are not tested or guaranteed. In some graphs or tables, the data presented may be outside the specified operating range (e.g., outside specified power supply range) and therefore, outside the warranted range.

"Typical" represents the mean of the distribution at 25°C. "Maximum" or "minimum" represents (mean + 3σ) or (mean - 3σ) respectively, where s is a standard deviation, over each temperature range.

FIGURE 11-1: IDD vs. VDD at FOSC = 4 MHz

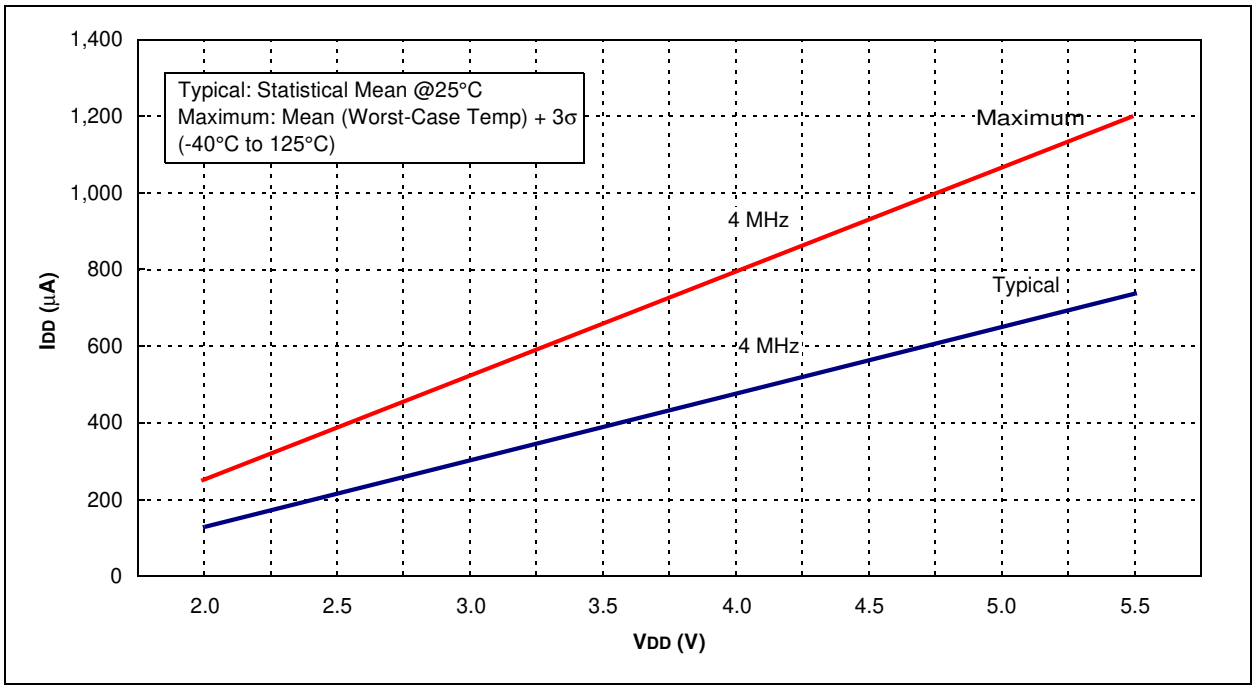

FIGURE 11-2: IDD VS. FOSC OVER VDD (HS MODE, PIC16F505 only)

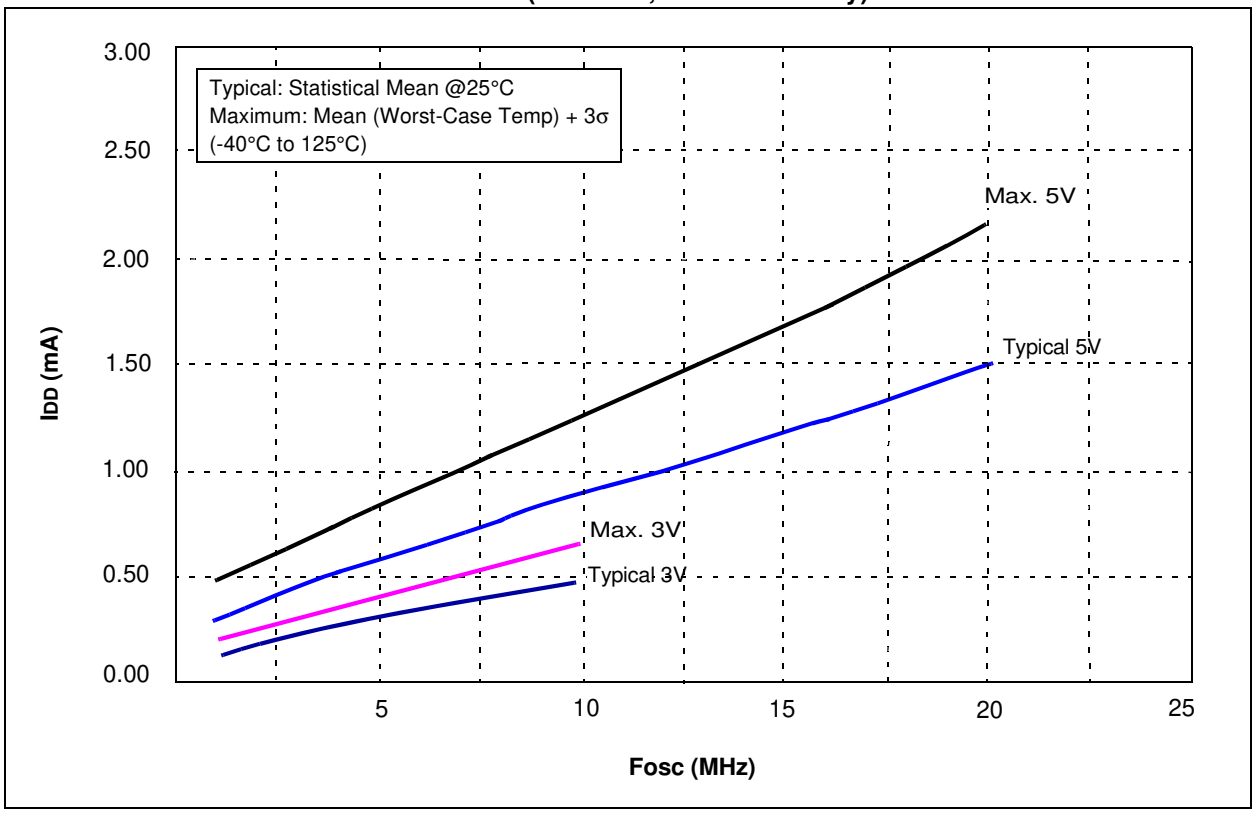

FIGURE 11-3: TYPICAL IPD VS. VDD (SLEEP MODE, ALL PERIPHERALS DISABLED)

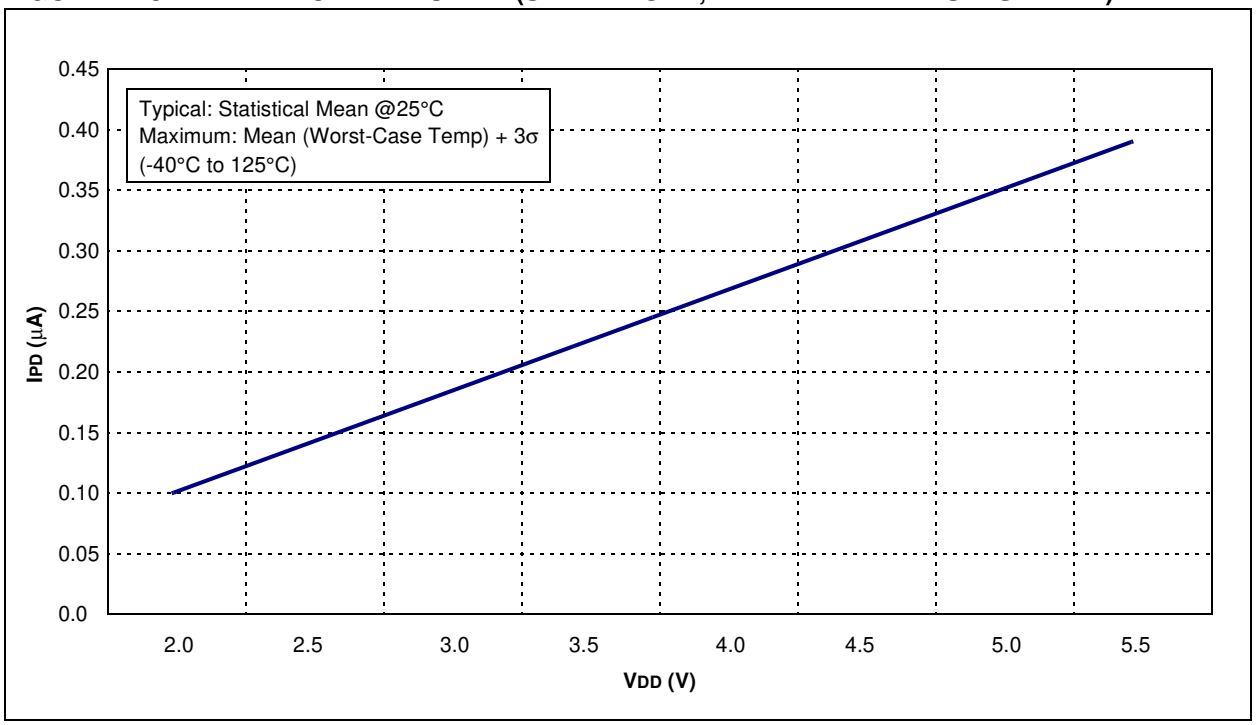

© 2009 Microchip Technology Inc.

FIGURE 11-4: MAXIMUM IPD vs. VDD (SLEEP MODE, ALL PERIPHERALS DISABLED)

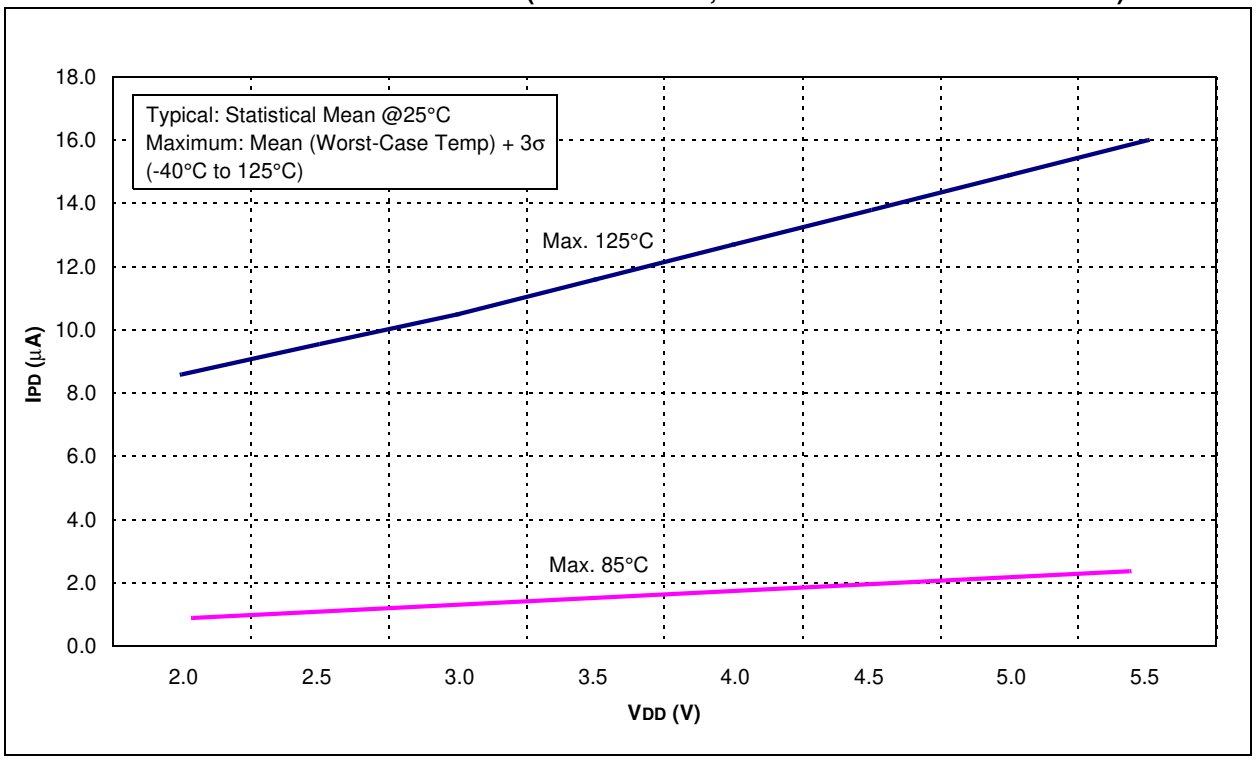

FIGURE 11-5: TYPICAL WDT IPD vs. VDD

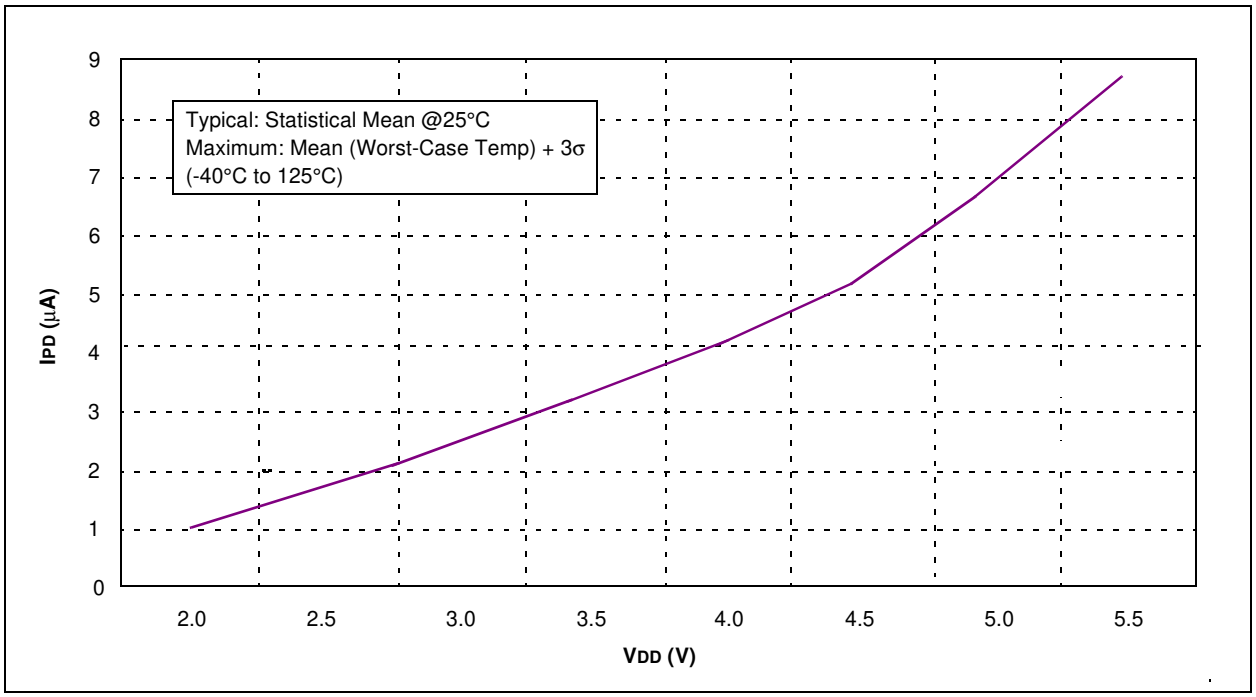

FIGURE 11-6: MAXIMUM WDT IPD vs. VDD OVER TEMPERATURE

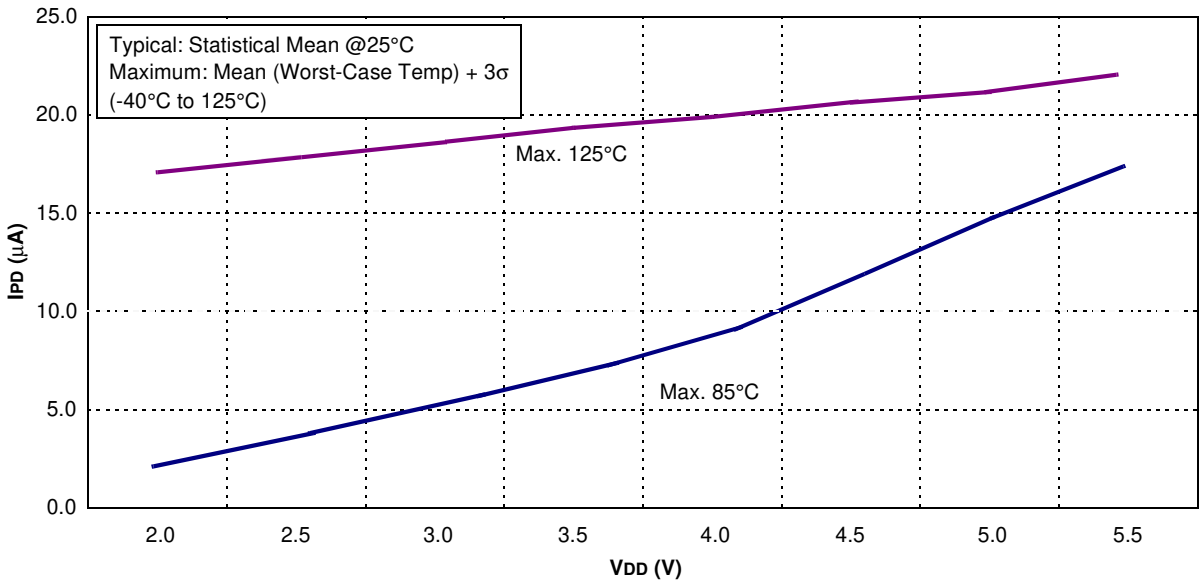

FIGURE 11-7: WDT TIME-OUT or DEVICE RESET TIMER vs. VDD OVER TEMPERATURE (NO WDT PRESCALER)(1)

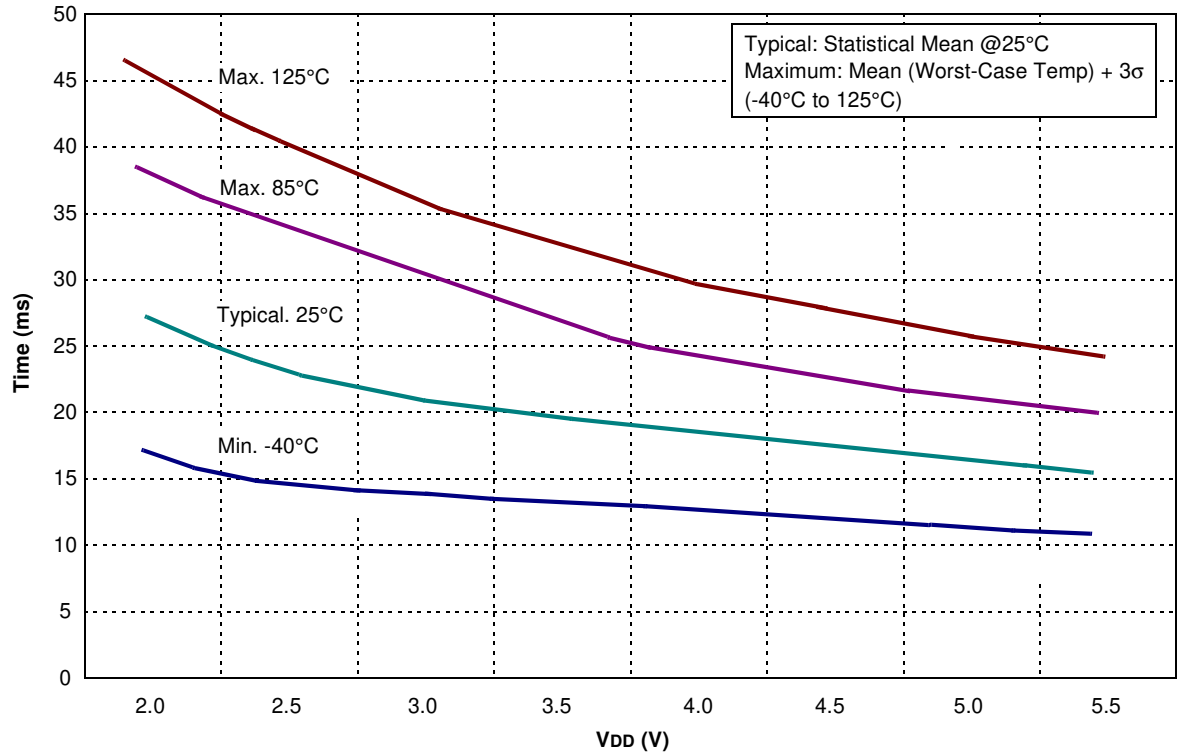

Note 1: Device Reset Timer (DRT) values are for case of Reset of power-up. Table 7-6 shows DRT values for the case of other types of Reset events.

© 2009 Microchip Technology Inc.

FIGURE 11-8: VOL vs. IOL OVER TEMPERATURE (VDD = 3.0V)

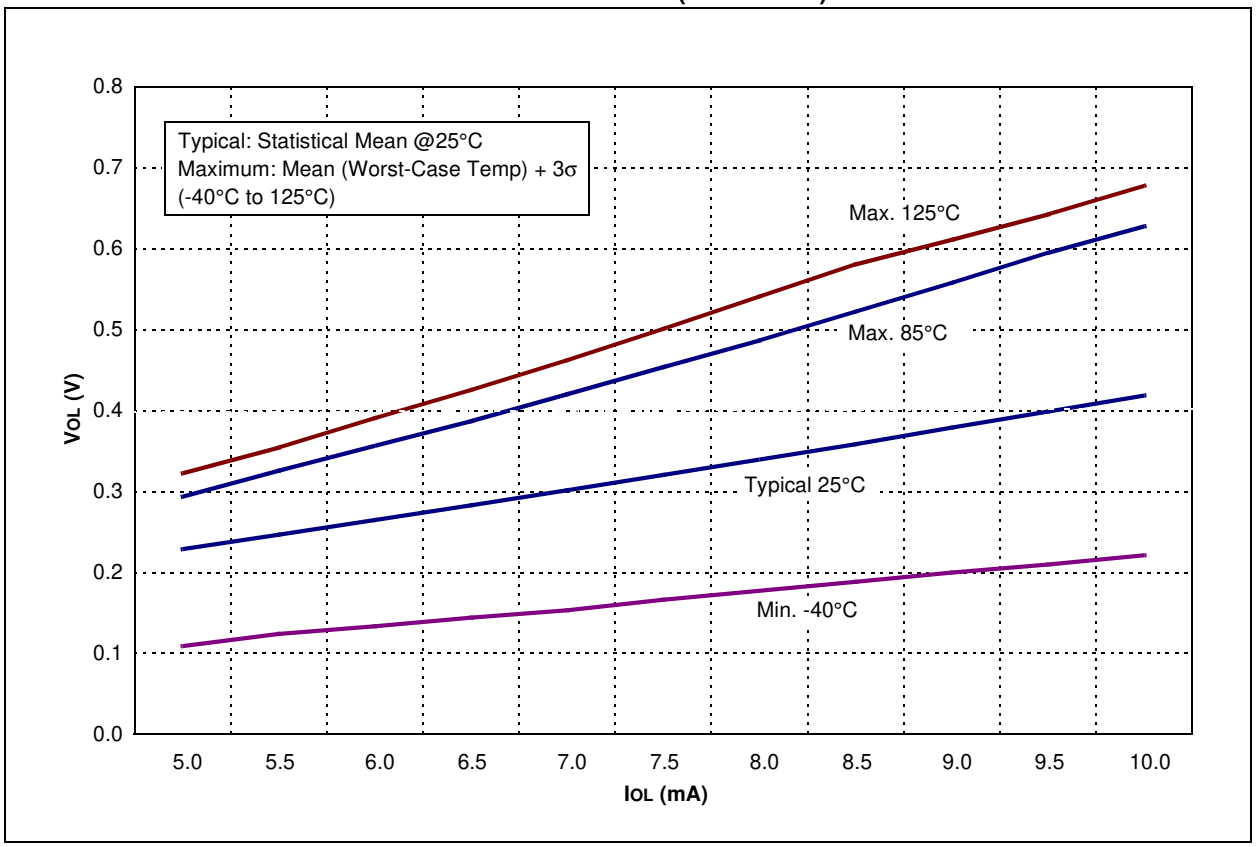

FIGURE 11-9: VOL vs. IOL OVER TEMPERATURE (VDD = 5.0V)

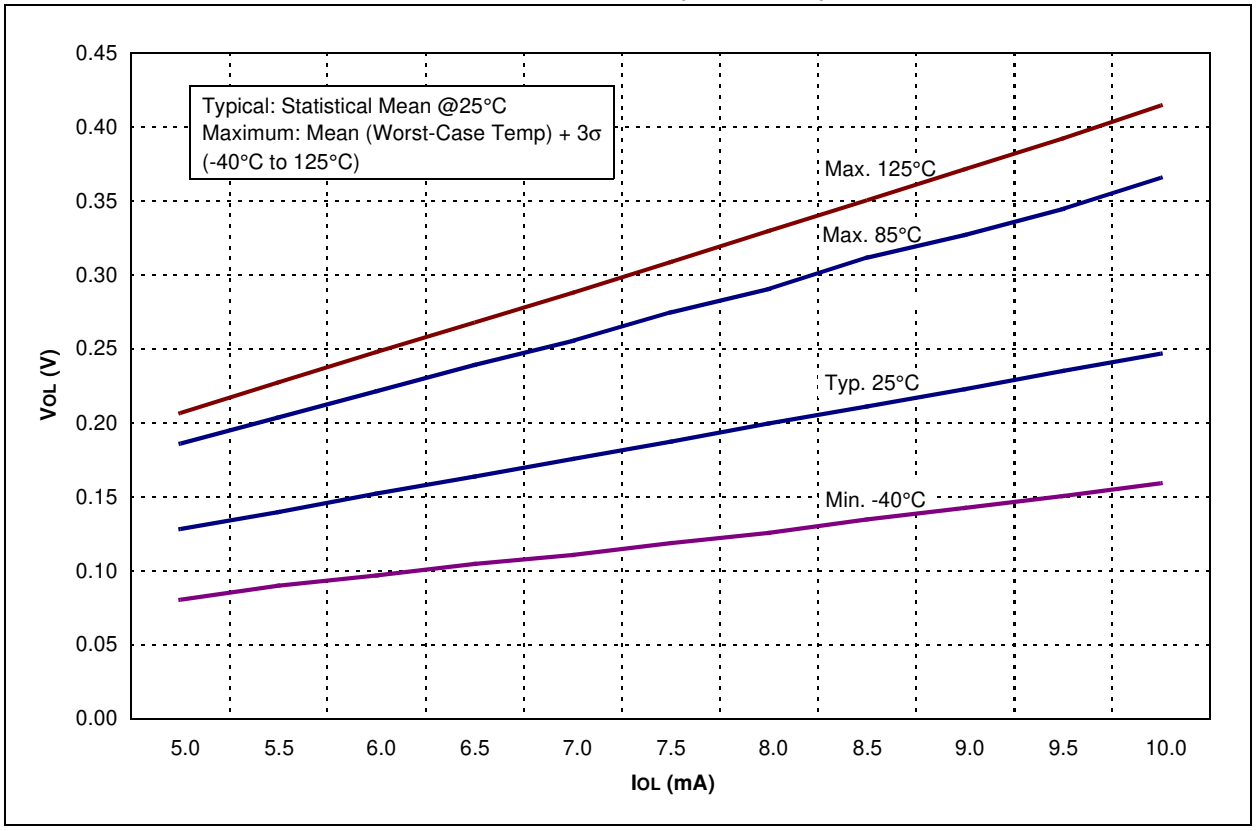

FIGURE 11-10: VOH vs. IOH OVER TEMPERATURE (VDD = 3.0V)

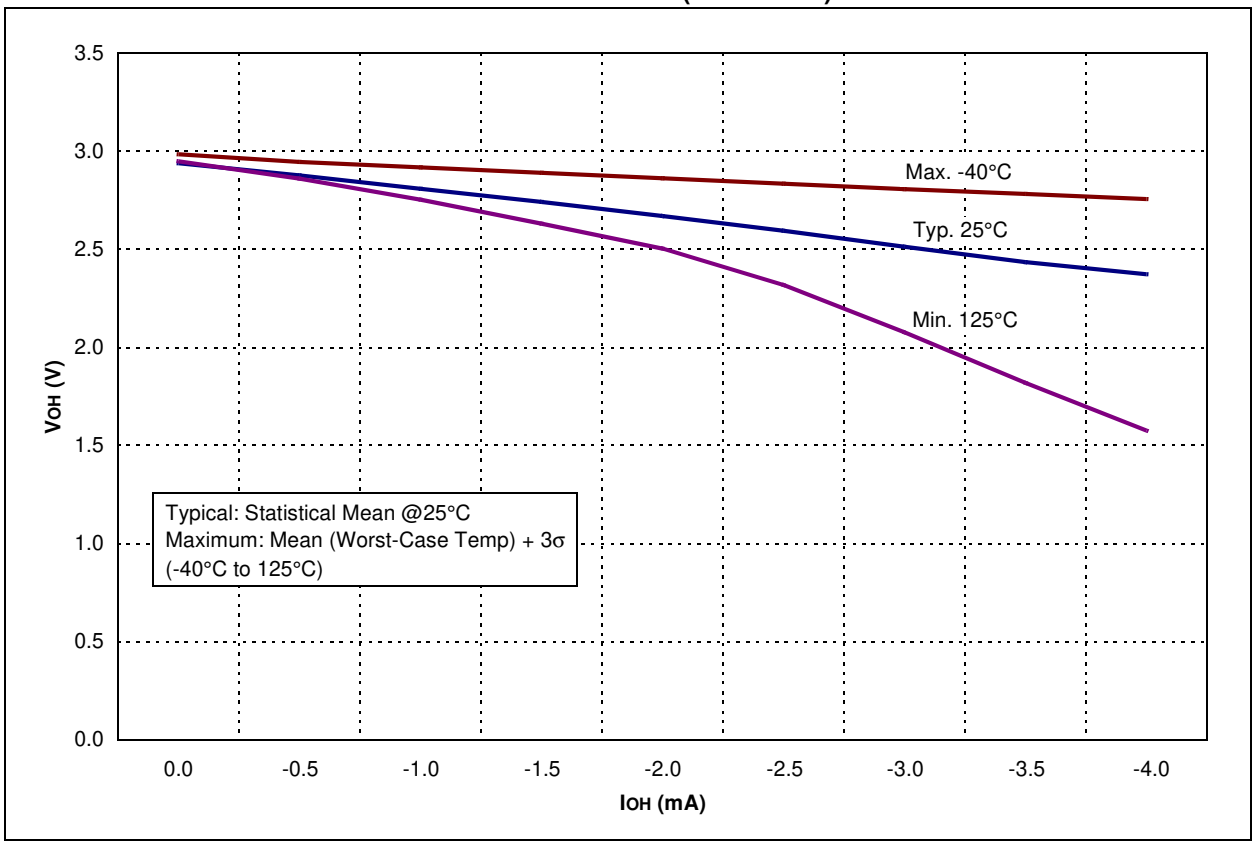

FIGURE 11-11: VOH vs. IOH OVER TEMPERATURE (VDD = 5.0V)

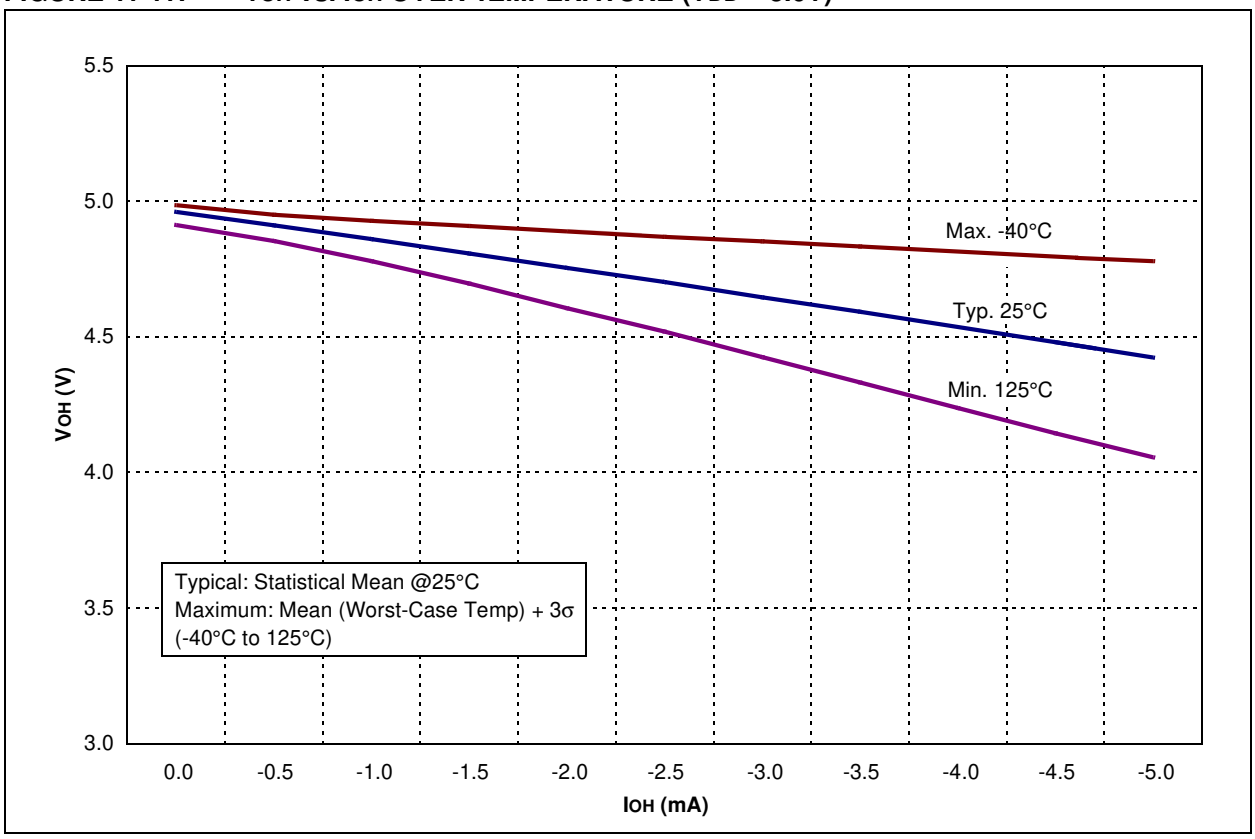

© 2009 Microchip Technology Inc.

FIGURE 11-12: TTL INPUT THRESHOLD VIN vs. VDD

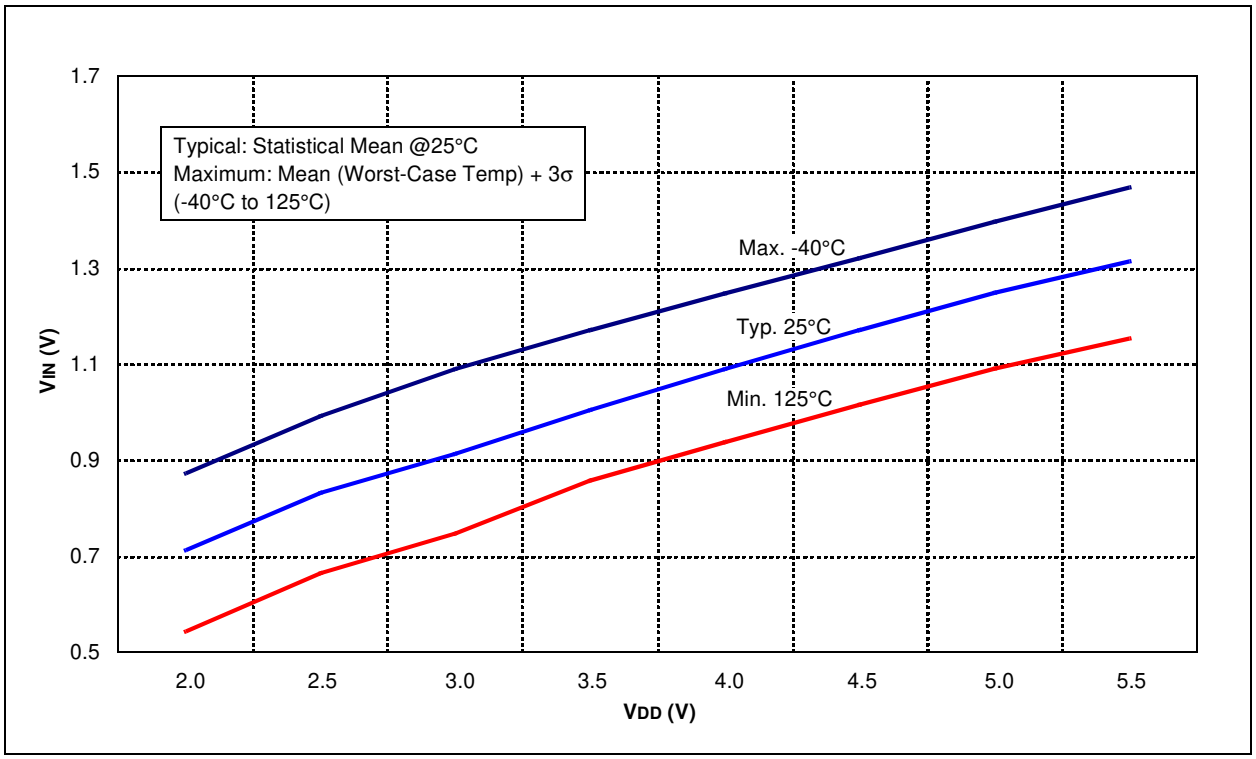

FIGURE 11-13: SCHMITT TRIGGER INPUT THRESHOLD VIN vs. VDD

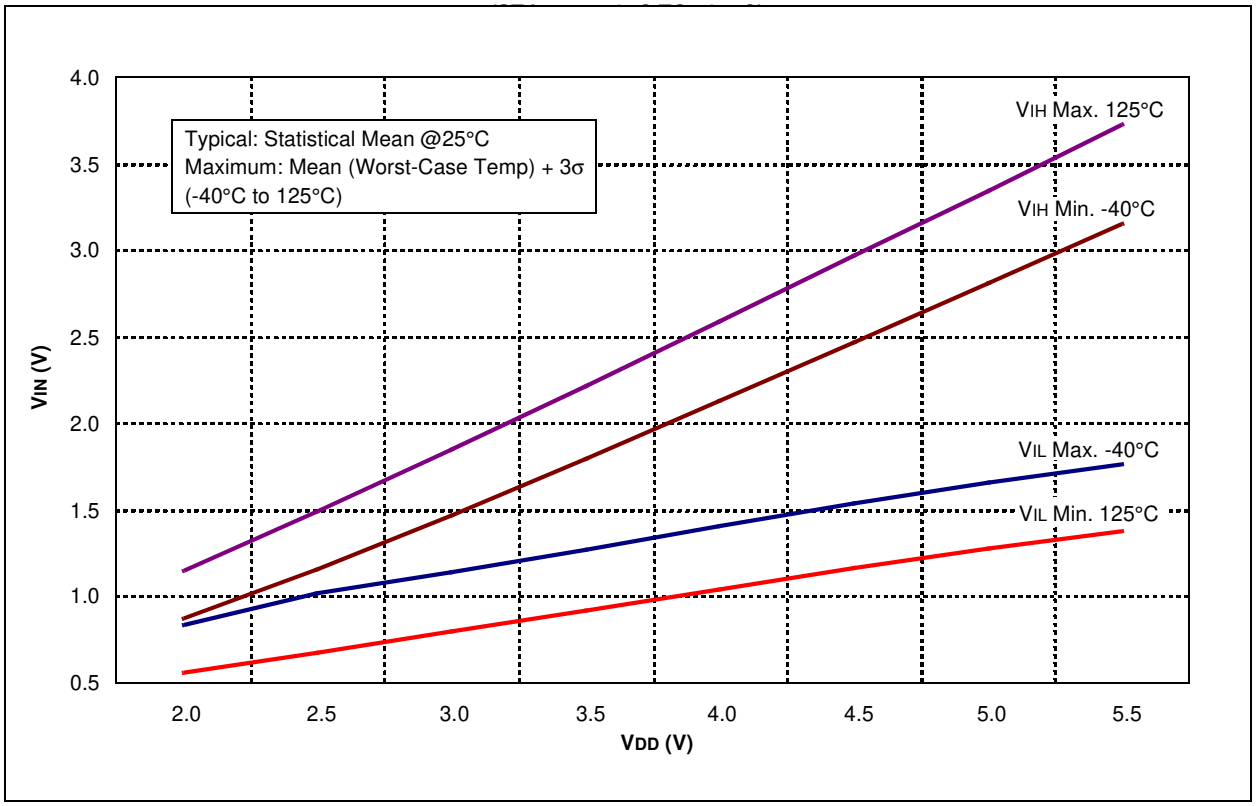

FIGURE 11-14: TYPICAL INTOSC FREQUENCY CHANGE vs VDD (25°C)

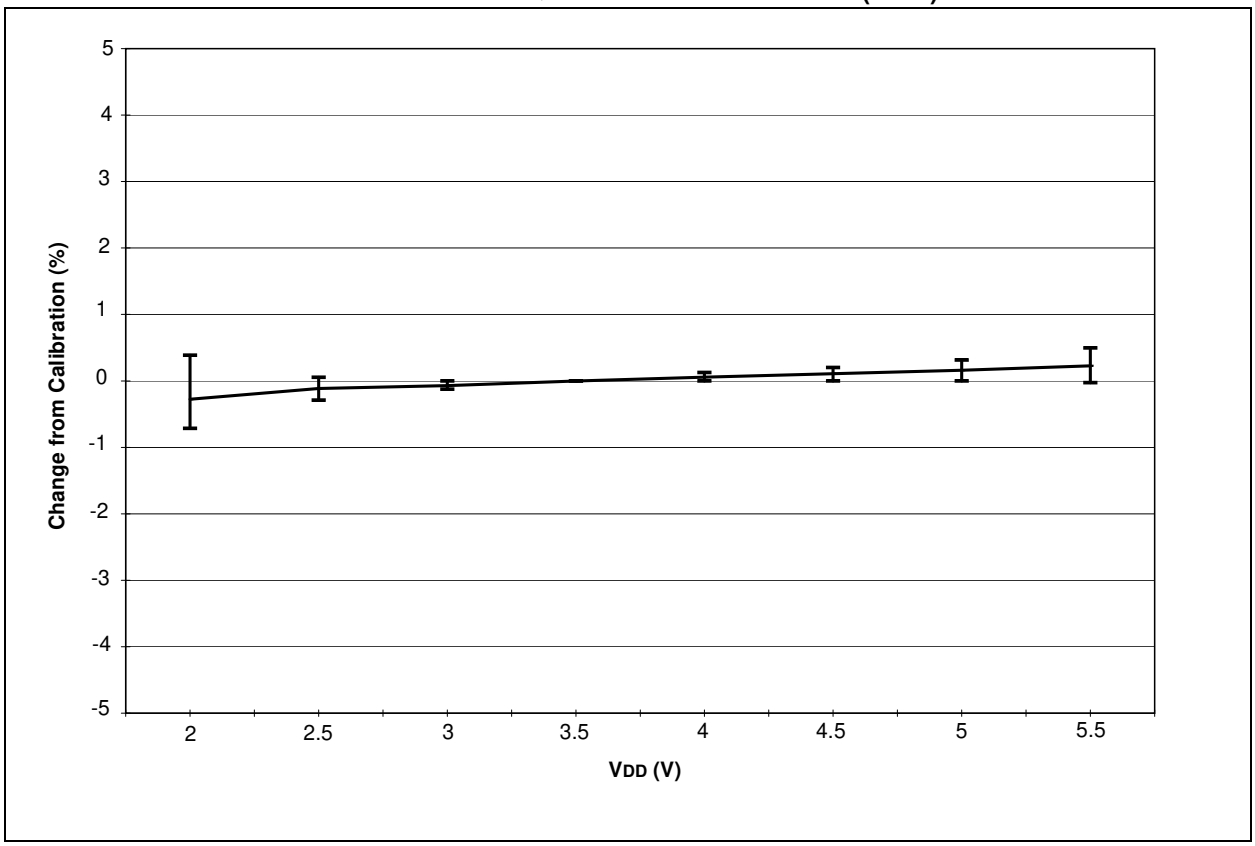

FIGURE 11-15: TYPICAL INTOSC FREQUENCY CHANGE vs VDD (-40°C)

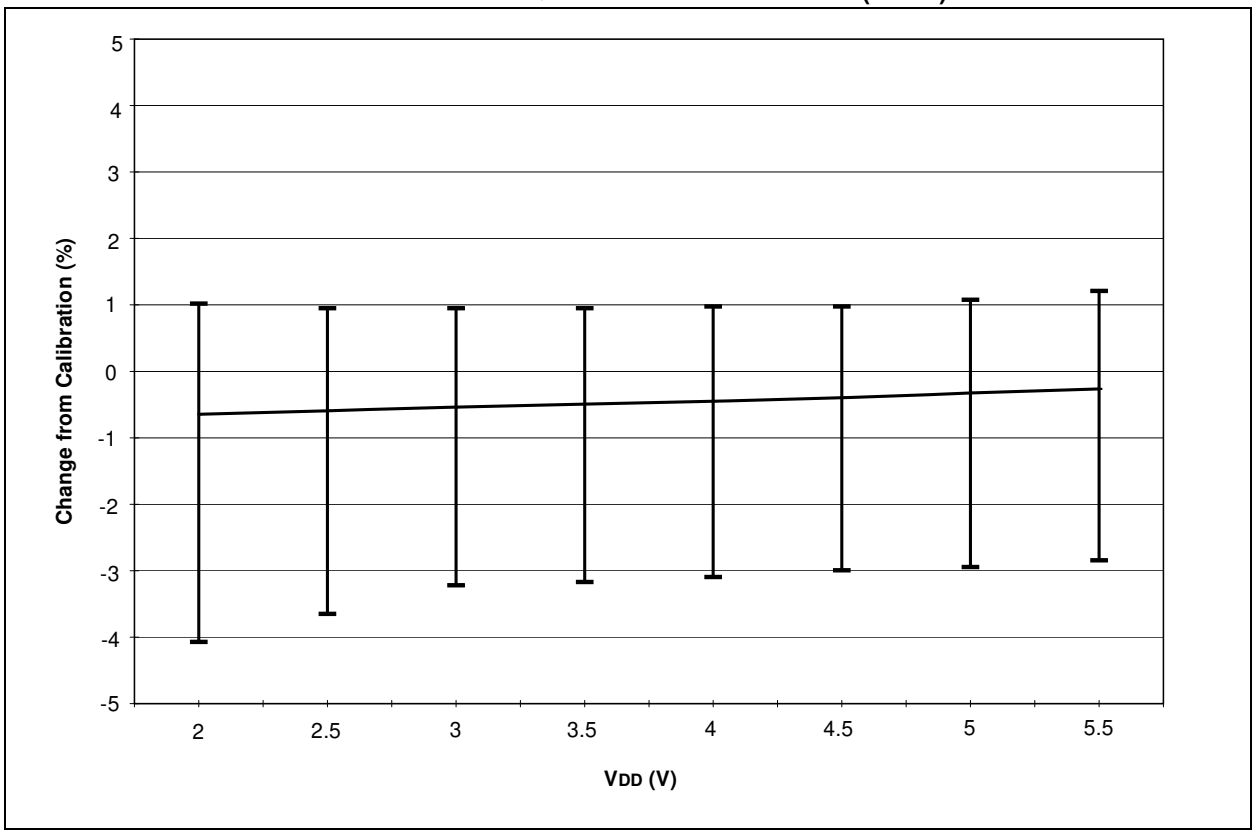

© 2009 Microchip Technology Inc.

FIGURE 11-16: TYPICAL INTOSC FREQUENCY CHANGE vs VDD (85°C)

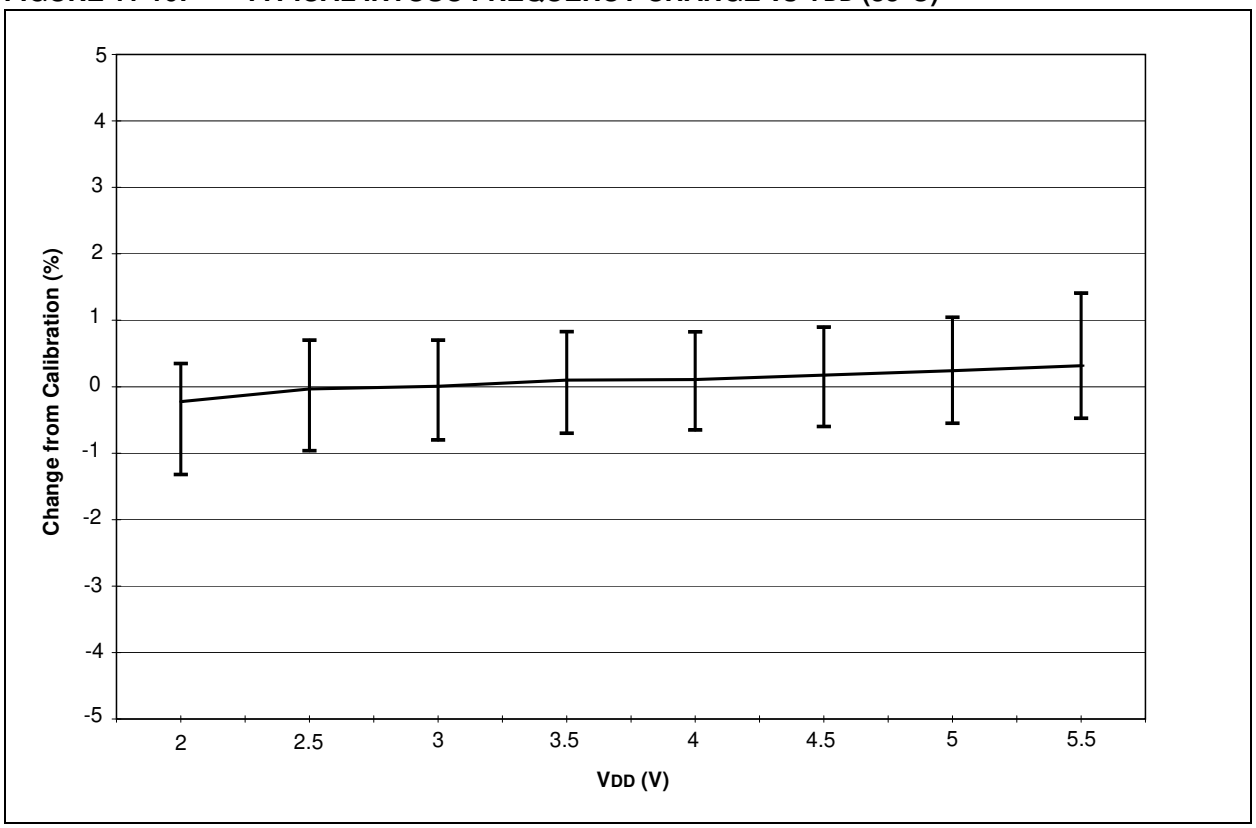

FIGURE 11-17: TYPICAL INTOSC FREQUENCY CHANGE vs VDD (125°C

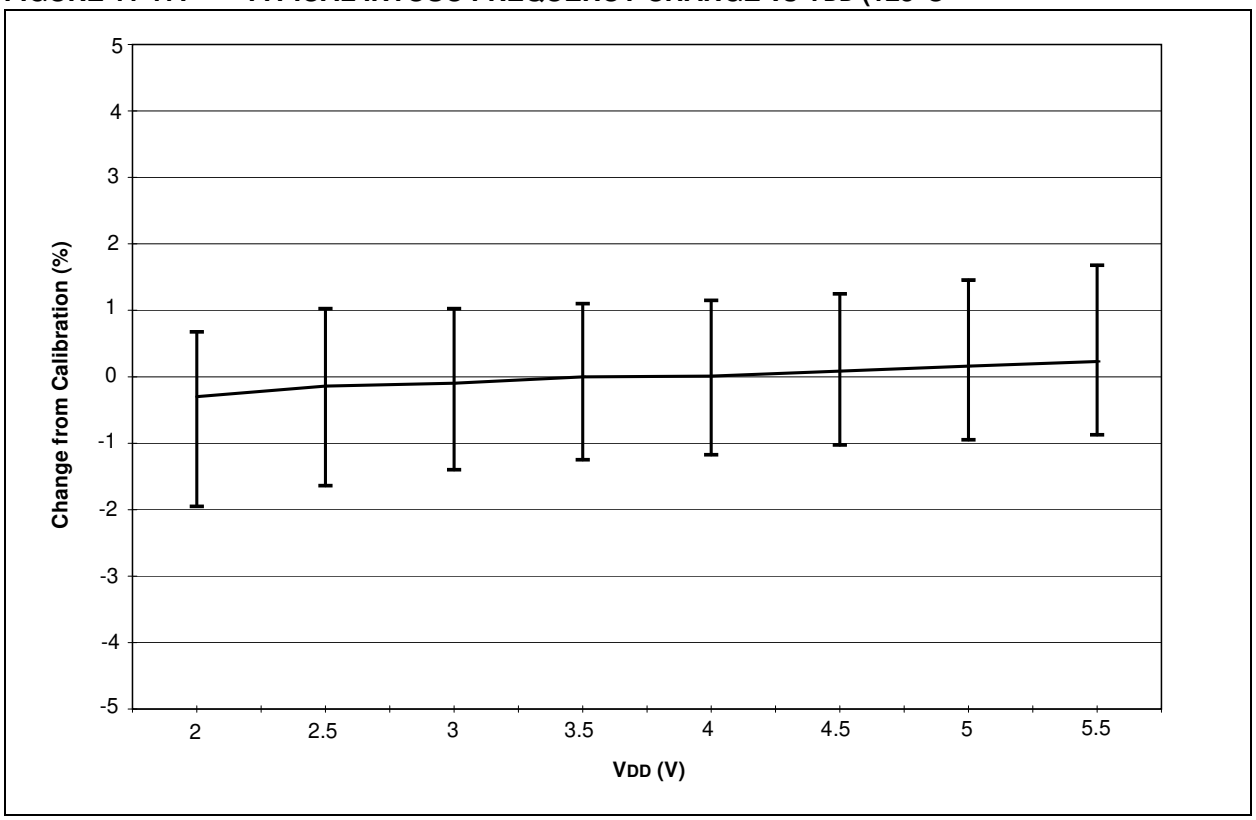

NOTES:

© 2009 Microchip Technology Inc.

12.0 PACKAGING INFORMATION

12.1 Package Marking Information

8-Lead PDIP

Example

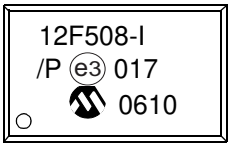

8-Lead SOIC (3.90 mm)

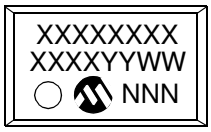

Example

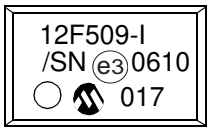

8-Lead MSOP

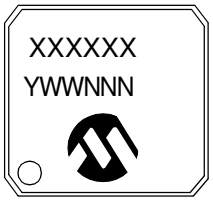

Example

8-Lead 2x3 DFN*

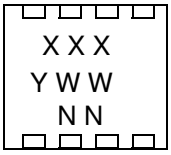

Example

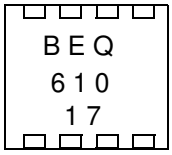

Legend:	XX...X	Customer-specific information
	Y	Year code (last digit of calendar year)
	YY	Year code (last 2 digits of calendar year)
	WW	Week code (week of January 1 is week ‘01’)
	NNN	Alphanumeric traceability code
	e3	Pb-free JEDEC designator for Matte Tin (Sn)
	*	This package is Pb-free. The Pb-free JEDEC designator (e3) can be found on the outer packaging for this package.

Note: In the event the full Microchip part number cannot be marked on one line, it will be carried over to the next line thus limiting the number of available characters for customer specific information.

* Standard PIC® device marking consists of Microchip part number, year code, week code, and traceability code. For PIC device marking beyond this, certain price adders apply. Please check with your Microchip Sales Office. For QTP devices, any special marking adders are included in QTP price.

12.1 Package Marking Information (Continued)

14-Lead PDIP (300 mil)

Example

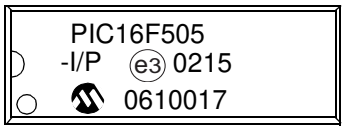

14-Lead SOIC (3.90 mm)

Example

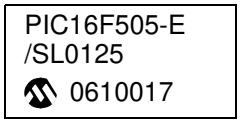

14-Lead TSSOP (4.4 mm)

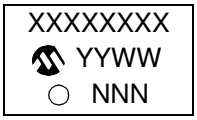

Example

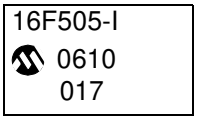

16-Lead QFN

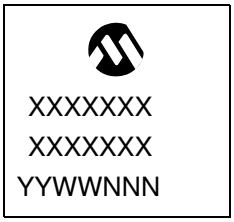

Example

TABLE 12-1: 8-LEAD 2X3 DFN (MC) TOP MARKING

Part Number	Marking
PIC12F508 (T) - I/MC	BN0
PIC12F508-E/MC	BP0
PIC12F509 (T) - I/MC	BQ0
PIC12F509-E/MC	BR0

© 2009 Microchip Technology Inc.

8-Lead Plastic Dual In-Line (P) – 300 mil Body [PDIP]

Note: For the most current package drawings, please see the Microchip Packaging Specification located at http://www.microchip.com/packaging

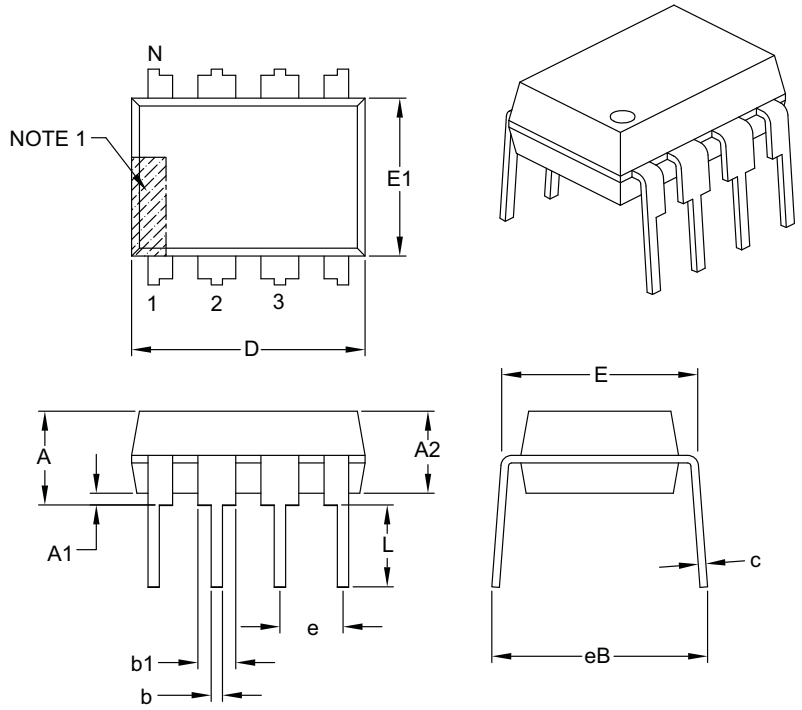

Units		INCHES		
Dimension Limits		MIN	NOM	MAX
Number of Pins	N	8		
Pitch	e	.100 BSC		
Top to Seating Plane	A	–	–	.210
Molded Package Thickness	A2	.115	.130	.195
Base to Seating Plane	A1	.015	–	–
Shoulder to Shoulder Width	E	.290	.310	.325
Molded Package Width	E1	.240	.250	.280
Overall Length	D	.348	.365	.400
Tip to Seating Plane	L	.115	.130	.150
Lead Thickness	c	.008	.010	.015
Upper Lead Width	b1	.040	.060	.070
Lower Lead Width	b	.014	.018	.022
Overall Row Spacing §	eB	–	–	.430

Notes:

1. Pin 1 visual index feature may vary, but must be located with the hatched area.
2. § Significant Characteristic.
3. Dimensions D and E1 do not include mold flash or protrusions. Mold flash or protrusions shall not exceed .010" per side.
4. Dimensioning and tolerancing per ASME Y14.5M.
   BSC: Basic Dimension. Theoretically exact value shown without tolerances.

Microchip Technology Drawing C04-018B

8-Lead Plastic Small Outline (SN) – Narrow, 3.90 mm Body [SOIC]

Note: For the most current package drawings, please see the Microchip Packaging Specification located at http://www.microchip.com/packaging

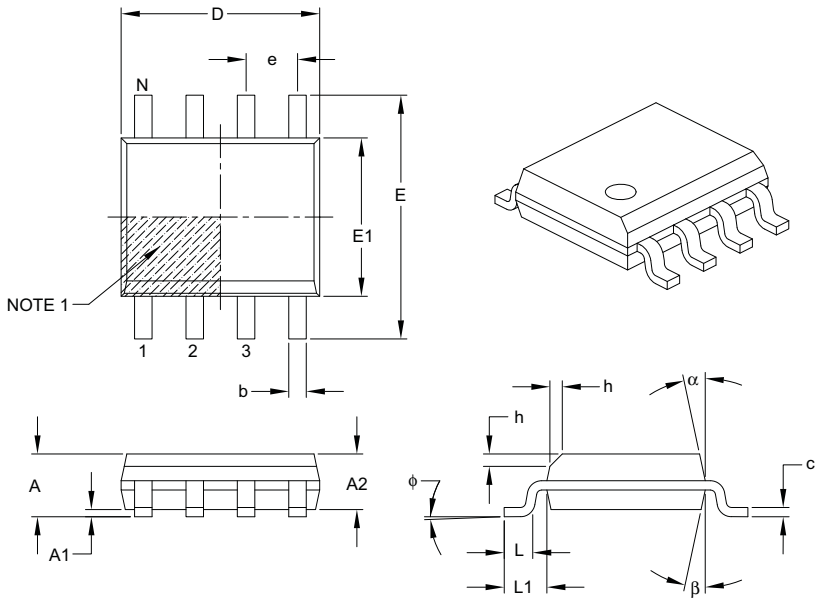

Units		MILLIMETERS		
Dimension Limits		MIN	NOM	MAX
Number of Pins	N	8		
Pitch	e	1.27 BSC		
Overall Height	A	–	–	1.75
Molded Package Thickness	A2	1.25	–	–
Standoff §	A1	0.10	–	0.25
Overall Width	E	6.00 BSC		
Molded Package Width	E1	3.90 BSC		
Overall Length	D	4.90 BSC		
Chamfer (optional)	h	0.25	–	0.50
Foot Length	L	0.40	–	1.27
Footprint	L1	1.04 REF		
Foot Angle	φ	0°	–	8°
Lead Thickness	c	0.17	–	0.25
Lead Width	b	0.31	–	0.51
Mold Draft Angle Top	α	5°	–	15°
Mold Draft Angle Bottom	β	5°	–	15°

Notes:

1. Pin 1 visual index feature may vary, but must be located within the hatched area.
2. § Significant Characteristic.
3. Dimensions D and E1 do not include mold flash or protrusions. Mold flash or protrusions shall not exceed 0.15 mm per side.
4. Dimensioning and tolerancing per ASME Y14.5M.

   BSC: Basic Dimension. Theoretically exact value shown without tolerances.

   REF: Reference Dimension, usually without tolerance, for information purposes only.

Microchip Technology Drawing C04-057B

© 2009 Microchip Technology Inc.

8-Lead Plastic Small Outline (SN) – Narrow, 3.90 mm Body [SOIC]

Note: For the most current package drawings, please see the Microchip Packaging Specification located at http://www.microchip.com/packaging

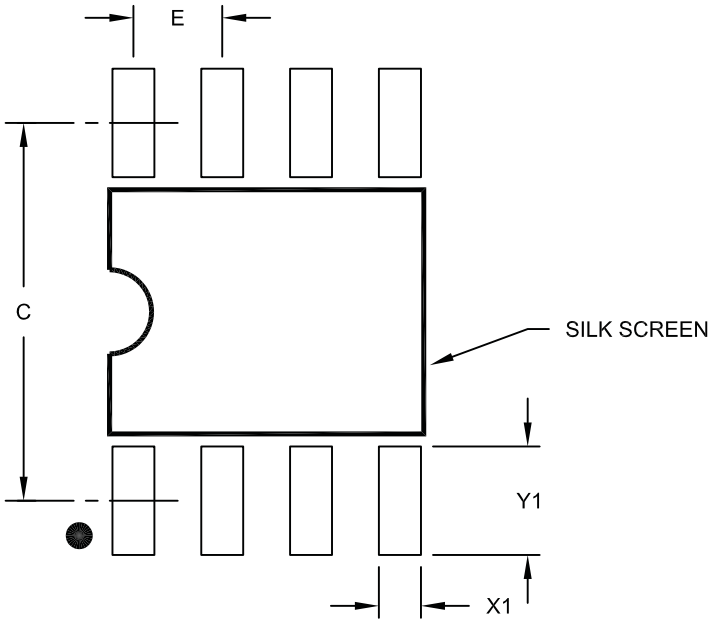

RECOMMENDED LAND PATTERN

Units		MILLIMETERS		
Dimension Limits		MIN	NOM	MAX
Contact Pitch	E		1.27 BSC	
Contact Pad Spacing	C		5.40	
Contact Pad Width (X8)	X1			0.60
Contact Pad Length (X8)	Y1			1.55

Notes:

1. Dimensioning and tolerancing per ASME Y14.5M
   BSC: Basic Dimension. Theoretically exact value shown without tolerances.

Microchip Technology Drawing No. C04-2057A

8-Lead Plastic Micro Small Outline Package (MS) [MSOP]

Note: For the most current package drawings, please see the Microchip Packaging Specification located at http://www.microchip.com/packaging

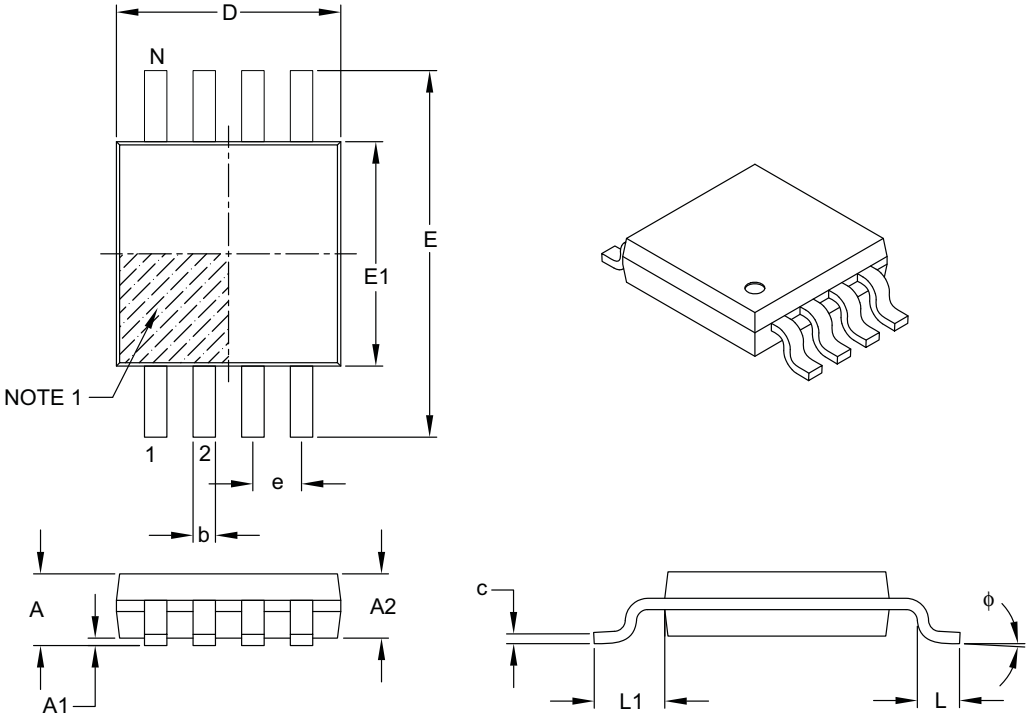

Units		MILLIMETERS		
Dimension Limits		MIN	NOM	MAX
Number of Pins	N	8		
Pitch	e	0.65 BSC		
Overall Height	A	–	–	1.10
Molded Package Thickness	A2	0.75	0.85	0.95
Standoff	A1	0.00	–	0.15
Overall Width	E	4.90 BSC		
Molded Package Width	E1	3.00 BSC		
Overall Length	D	3.00 BSC		
Foot Length	L	0.40	0.60	0.80
Footprint	L1	0.95 REF		
Foot Angle	ϕ	0°	–	8°
Lead Thickness	c	0.08	–	0.23
Lead Width	b	0.22	–	0.40

Notes:

1. Pin 1 visual index feature may vary, but must be located within the hatched area.
2. Dimensions D and E1 do not include mold flash or protrusions. Mold flash or protrusions shall not exceed 0.15 mm per side.
3. Dimensioning and tolerancing per ASME Y14.5M.
   BSC: Basic Dimension. Theoretically exact value shown without tolerances.
   REF: Reference Dimension, usually without tolerance, for information purposes only.

Microchip Technology Drawing C04-111B

© 2009 Microchip Technology Inc.

8-Lead Plastic Dual Flat, No Lead Package (MC) – 2x3x0.9 mm Body [DFN]

Note: For the most current package drawings, please see the Microchip Packaging Specification located at http://www.microchip.com/packaging

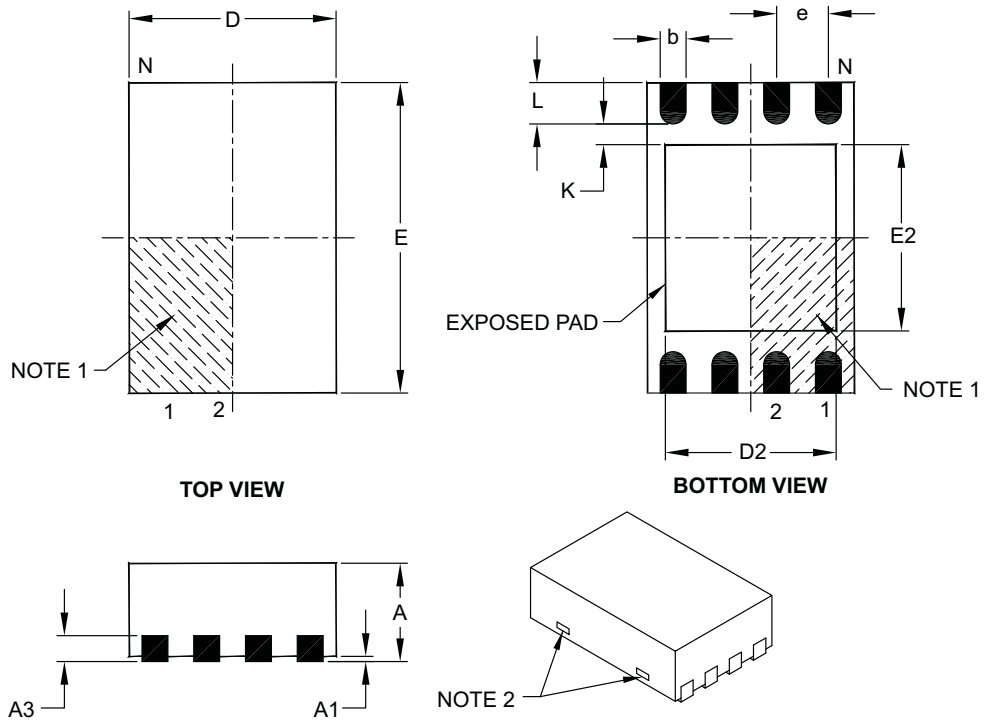

Units		MILLIMETERS		
Dimension Limits		MIN	NOM	MAX
Number of Pins	N	8		
Pitch	e	0.50 BSC		
Overall Height	A	0.80	0.90	1.00
Standoff	A1	0.00	0.02	0.05
Contact Thickness	A3	0.20 REF		
Overall Length	D	2.00 BSC		
Overall Width	E	3.00 BSC		
Exposed Pad Length	D2	1.30	–	1.55
Exposed Pad Width	E2	1.50	–	1.75
Contact Width	b	0.20	0.25	0.30
Contact Length	L	0.30	0.40	0.50
Contact-to-Exposed Pad	K	0.20	–	–

Notes:

1. Pin 1 visual index feature may vary, but must be located within the hatched area.
2. Package may have one or more exposed tie bars at ends.
3. Package is saw singulated.
4. Dimensioning and tolerancing per ASME Y14.5M.
   BSC: Basic Dimension. Theoretically exact value shown without tolerances.
   REF: Reference Dimension, usually without tolerance, for information purposes only.

Microchip Technology Drawing C04-123C

14-Lead Plastic Dual In-Line (P) – 300 mil Body [PDIP]

Note: For the most current package drawings, please see the Microchip Packaging Specification located at http://www.microchip.com/packaging

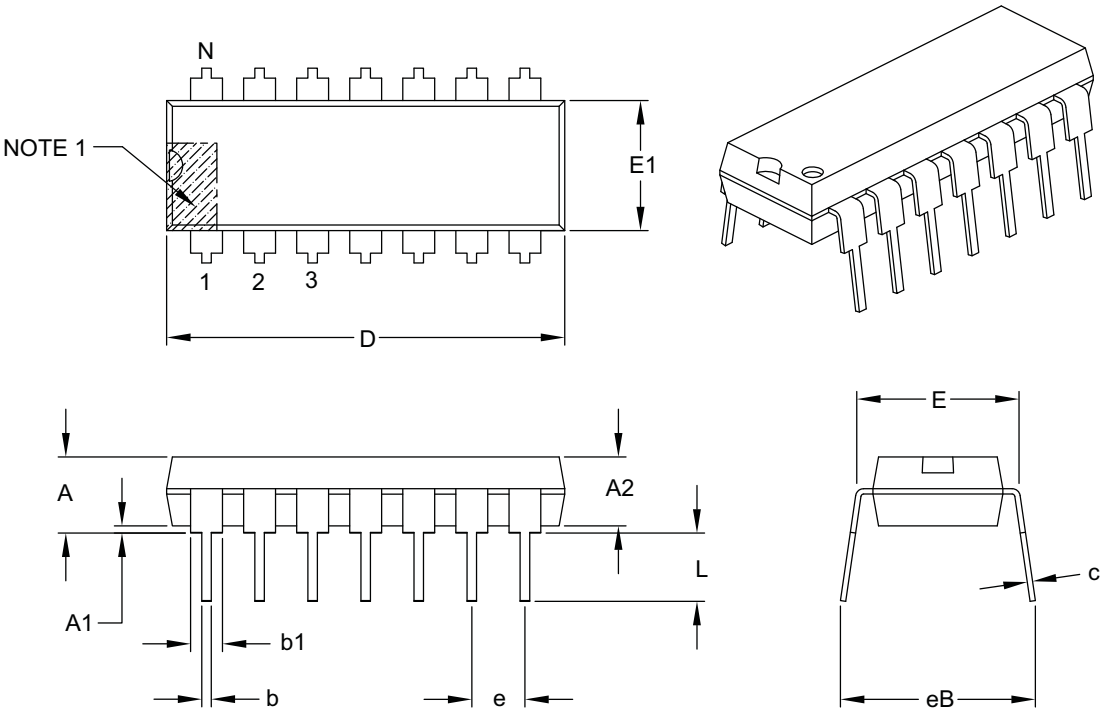

Units		INCHES		
Dimension Limits		MIN	NOM	MAX
Number of Pins	N	14		
Pitch	e	.100 BSC		
Top to Seating Plane	A	–	–	.210
Molded Package Thickness	A2	.115	.130	.195
Base to Seating Plane	A1	.015	–	–
Shoulder to Shoulder Width	E	.290	.310	.325
Molded Package Width	E1	.240	.250	.280
Overall Length	D	.735	.750	.775
Tip to Seating Plane	L	.115	.130	.150
Lead Thickness	c	.008	.010	.015
Upper Lead Width	b1	.045	.060	.070
Lower Lead Width	b	.014	.018	.022
Overall Row Spacing §	eB	–	–	.430

Notes:

1. Pin 1 visual index feature may vary, but must be located with the hatched area.
2. § Significant Characteristic.
3. Dimensions D and E1 do not include mold flash or protrusions. Mold flash or protrusions shall not exceed .010" per side.
4. Dimensioning and tolerancing per ASME Y14.5M.

   BSC: Basic Dimension. Theoretically exact value shown without tolerances.

Microchip Technology Drawing C04-005B

© 2009 Microchip Technology Inc.

14-Lead Plastic Small Outline (SL) – Narrow, 3.90 mm Body [SOIC]

Note: For the most current package drawings, please see the Microchip Packaging Specification located at http://www.microchip.com/packaging

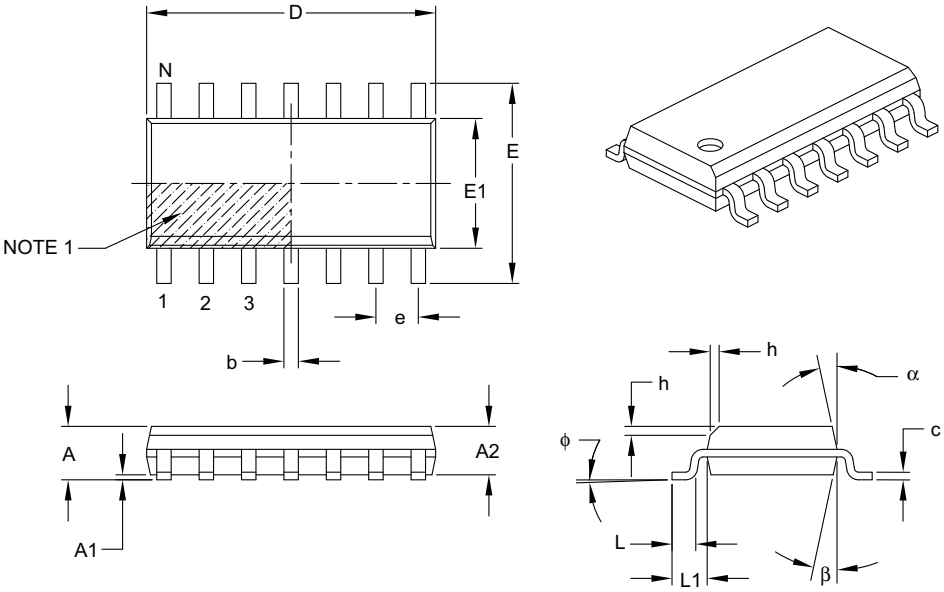

Units		MILLIMETERS		
Dimension Limits		MIN	NOM	MAX
Number of Pins	N	14		
Pitch	e	1.27 BSC		
Overall Height	A	–	–	1.75
Molded Package Thickness	A2	1.25	–	–
Standoff §	A1	0.10	–	0.25
Overall Width	E	6.00 BSC		
Molded Package Width	E1	3.90 BSC		
Overall Length	D	8.65 BSC		
Chamfer (optional)	h	0.25	–	0.50
Foot Length	L	0.40	–	1.27
Footprint	L1	1.04 REF		
Foot Angle	φ	0°	–	8°
Lead Thickness	c	0.17	–	0.25
Lead Width	b	0.31	–	0.51
Mold Draft Angle Top	α	5°	–	15°
Mold Draft Angle Bottom	β	5°	–	15°

Notes:

1. Pin 1 visual index feature may vary, but must be located within the hatched area.
2. § Significant Characteristic.
3. Dimensions D and E1 do not include mold flash or protrusions. Mold flash or protrusions shall not exceed 0.15 mm per side.
4. Dimensioning and tolerancing per ASME Y14.5M.

   BSC: Basic Dimension. Theoretically exact value shown without tolerances.

   REF: Reference Dimension, usually without tolerance, for information purposes only.

Microchip Technology Drawing C04-065B

14-Lead Plastic Thin Shrink Small Outline (ST) – 4.4 mm Body [TSSOP]

Note: For the most current package drawings, please see the Microchip Packaging Specification located at http://www.microchip.com/packaging

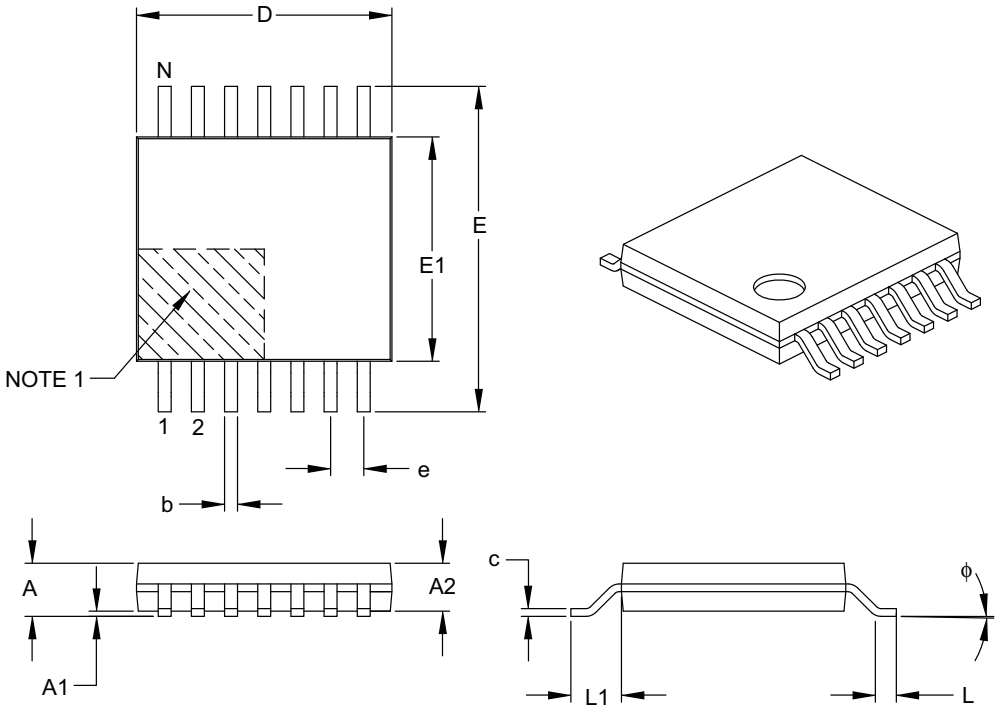

Units		MILLIMETERS		
Dimension Limits		MIN	NOM	MAX
Number of Pins	N	14		
Pitch	e	0.65 BSC		
Overall Height	A	–	–	1.20
Molded Package Thickness	A2	0.80	1.00	1.05
Standoff	A1	0.05	–	0.15
Overall Width	E	6.40 BSC		
Molded Package Width	E1	4.30	4.40	4.50
Molded Package Length	D	4.90	5.00	5.10
Foot Length	L	0.45	0.60	0.75
Footprint	L1	1.00 REF		
Foot Angle	ϕ	0°	–	8°
Lead Thickness	c	0.09	–	0.20
Lead Width	b	0.19	–	0.30

Notes:

1. Pin 1 visual index feature may vary, but must be located within the hatched area.
2. Dimensions D and E1 do not include mold flash or protrusions. Mold flash or protrusions shall not exceed 0.15 mm per side.
3. Dimensioning and tolerancing per ASME Y14.5M.
   BSC: Basic Dimension. Theoretically exact value shown without tolerances.
   REF: Reference Dimension, usually without tolerance, for information purposes only.

Microchip Technology Drawing C04-087B

© 2009 Microchip Technology Inc.

16-Lead Plastic Quad Flat, No Lead Package (MG) - 3x3x0.9 mm Body [QFN]

Note: For the most current package drawings, please see the Microchip Packaging Specification located at http://www.microchip.com/packaging

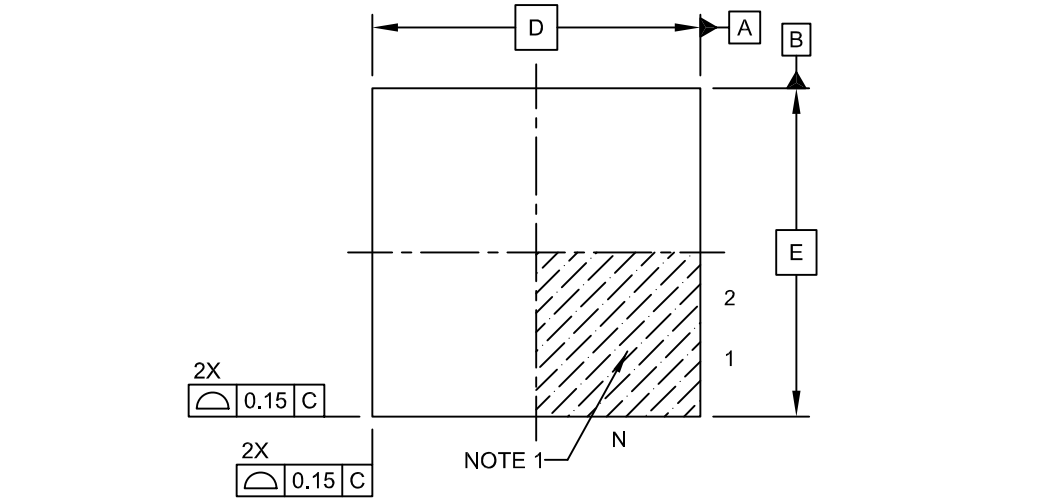

TOP VIEW

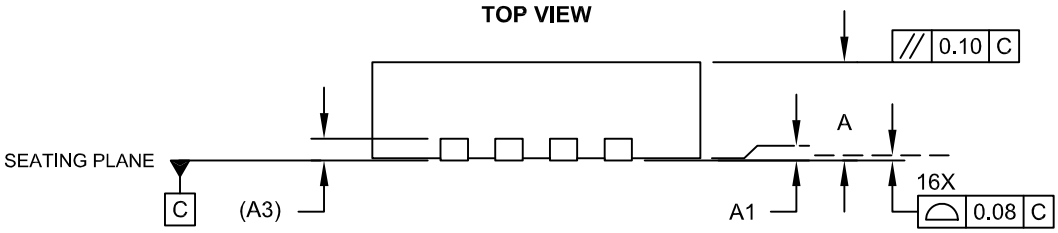

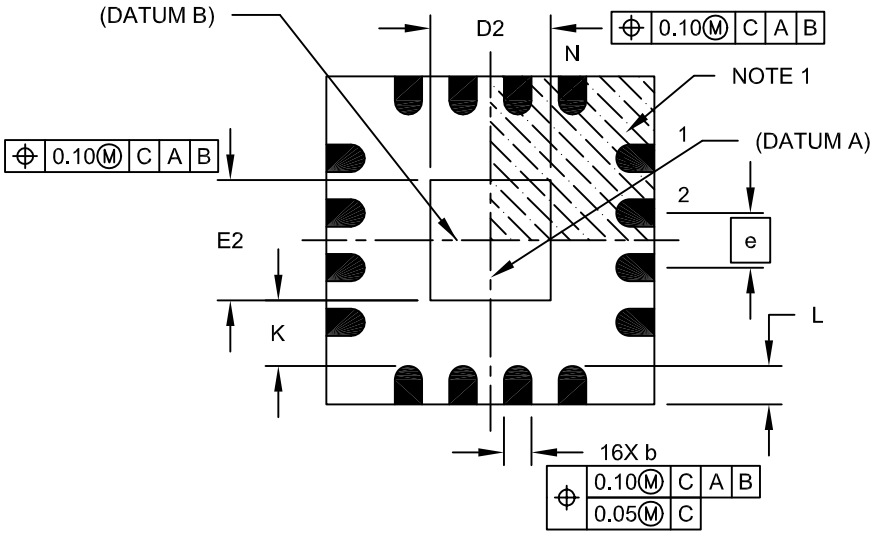

BOTTOM VIEW

Microchip Technology Drawing C04-142A Sheet 1 of 2

16-Lead Plastic Quad Flat, No Lead Package (MG) - 3x3x0.9 mm Body [QFN]

Note: For the most current package drawings, please see the Microchip Packaging Specification located at http://www.microchip.com/packaging

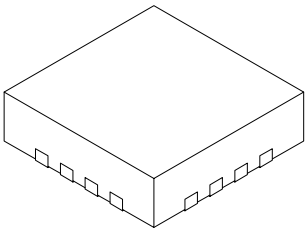

Units		MILLIMETERS		
Dimension Limits		MIN	NOM	MAX
Number of Pins	N	16		
Pitch	e	0.50 BSC		
Overall Height	A	0.80	0.85	0.90
Standoff	A1	0.00	0.02	0.05
Contact Thickness	A3	0.20 REF		
Overall Width	E	3.00 BSC		
Exposed Pad Width	E2	1.00	1.10	1.50
Overall Length	D	3.00 BSC		
Exposed Pad Length	D2	1.00	1.10	1.50
Contact Width	b	0.18	0.25	0.30
Contact Length	L	0.25	0.35	0.45
Contact-to-Exposed Pad	K	0.20	-	-

Notes:

1. Pin 1 visual index feature may vary, but must be located within the hatched area.
2. Package is saw singulated.
3. Dimensioning and tolerancing per ASME Y14.5M.
   BSC: Basic Dimension. Theoretically exact value shown without tolerances.
   REF: Reference Dimension, usually without tolerance, for information purposes only.

Microchip Technology Drawing C04-142A Sheet 2 of 2

© 2009 Microchip Technology Inc.

APPENDIX A: REVISION HISTORY

Revision A (April 2004)

Original data sheet for PIC12F508/509/16F505 devices

Revision B (June 2005)

Update packages

Revision C (03/2007)

Revised Table 3-2 Legend; Revised Table 3-3 RB3 and Legend; Revised Table 10-4 F10; Replaced Package Drawings (Rev. AN); Added DFN package; Replaced Development Support Section; Revised Product ID System.

Revision D (12/2007)

Revised Title; Operating Current; Table 1-1 added DFN and revised note; Revised Section 3.0, last paragraph; Revised Figure 4-4; Revised Table 4-2 (FSR); Revised Register 7-1 and Register 7-2; Revised Section 7.2.2; Revised Table 7-3, Note 2; Revised Table 7-4 (FSR) and Note 2; Deleted Section 7.3.1: External Clock In and Figure 7-6; Revised new Section 7.3.1; Replaced TBD with new data in Tables 10-4 and 10-5; Revised Tables 10-1 (Industrial), 10-2 (Extended), and Tables 10-1 (Industrial, Extended) and 10-2 (Pull-up Resistor Ranges), 10-3, 10-4 and 10-6; Revised Figure 10-1, Figure 10-2; Section 11.0, Added Char data; Revised Package Marking Information; Revised Product ID System.

Revision E (08/2009)

Added PIC16F505 16-Pin diagram (QFN); Added Note after subsection 5.2 PORTC; Updated Note 4 and deleted Note 5, Table 10-1; Deleted Param. No. D061 (Table 10-1) and Param. No. D061A becomes D061; Added QFN Package Information; Revised Product Identification System; Added Figures 11-14, 11-15, 11-16, 11-7 to Char Data section; Other minor corrections; Removed Preliminary status.

NOTES:

© 2009 Microchip Technology Inc.

INDEX

A

ALU 11
Assembler
    MPASM Assembler 66

B

Block Diagram
    On-Chip Reset Circuit 50
    Timer0 35
    TMR0/WDT Prescaler 39
    Watchdog Timer 53
Brown-Out Protection Circuit 54

C

C Compilers
    MPLAB C18 66
    MPLAB C30 66
Carry 11
Clocking Scheme 16
Code Protection 41, 55
Configuration Bits 41
Configuration Word 43
Customer Change Notification Service 107
Customer Notification Service 107
Customer Support 107

D

DC and AC Characteristics 81
Development Support 65
Digit Carry 11

E

Errata 6

F

Family of Devices
    PIC12F508/509/PIC16F505 7
FSR 28

I

I/O Interfacing 31
I/O Ports 31
I/O Programming Considerations 33
ID Locations 41, 55
INDF 28
Indirect Data Addressing 28
Instruction Cycle 16
Instruction Flow/Pipelining 16
Instruction Set Summary 58
Internet Address 107

L

Loading of PC 27

M

Memory Organization 17
    Data Memory 18
    Program Memory (PIC12F508/509) 17
    Program Memory (PIC16F505) 18
Microchip Internet Web Site 107
MPLAB ASM30 Assembler, Linker, Librarian 66
MPLAB ICD 2 In-Circuit Debugger 67
MPLAB ICE 2000 High-Performance Universal
    In-Circuit Emulator 67
MPLAB Integrated Development Environment Software 65
MPLAB PM3 Device Programmer 67
MPLAB REAL ICE In-Circuit Emulator System 67
MPLINK Object Linker/MPLIB Object Librarian 66

O

Option Register 24
OSC selection 41
OSCCAL Register 26
Oscillator Configurations 44
Oscillator Types
    HS 44
    LP 44
    RC 44
    XT 44

P

PIC12F508/509/16F505 Device Varieties 9
PICSTART Plus Development Programmer 68
POR
    Device Reset Timer (DRT) 41, 52
    $\overline{\text{PD}}$ 54, 41
    $\overline{\text{TO}}$ 54
PORTB 31
Power-down Mode 55
Prescaler 38
Program Counter 27

Q

Q cycles 16

R

RC Oscillator 45
Reader Response 108
Read-Modify-Write 33
Register File Map
    PIC12F508 19
    PIC12F509 19
    PIC16F505 19
Registers
    Special Function 20
Reset 41
Reset on Brown-Out 54

S

Sleep 41, 55
Software Simulator (MPLAB SIM) 66
Special Features of the CPU 41
Special Function Registers 20
Stack 27
Status Register 11, 22

T

Timer0
    Timer0 35
    Timer0 (TMR0) Module 35
    TMR0 with External Clock 37
Timing Diagrams and Specifications 75
Timing Parameter Symbology and Load Conditions 75
TRIS Registers 31

W

Wake-up from Sleep 55
Watchdog Timer (WDT) 41, 52
    Period 52
    Programming Considerations 52
WWW Address 107
WWW, On-Line Support 6

Z

Zero bit 11

© 2009 Microchip Technology Inc.

THE MICROCHIP WEB SITE

Microchip provides online support via our WWW site at www.microchip.com. This web site is used as a means to make files and information easily available to customers. Accessible by using your favorite Internet browser, the web site contains the following information:

- **Product Support** – Data sheets and errata, application notes and sample programs, design resources, user's guides and hardware support documents, latest software releases and archived software
- **General Technical Support** – Frequently Asked Questions (FAQ), technical support requests, online discussion groups, Microchip consultant program member listing
- **Business of Microchip** – Product selector and ordering guides, latest Microchip press releases, listing of seminars and events, listings of Microchip sales offices, distributors and factory representatives

CUSTOMER CHANGE NOTIFICATION SERVICE

Microchip's customer notification service helps keep customers current on Microchip products. Subscribers will receive e-mail notification whenever there are changes, updates, revisions or errata related to a specified product family or development tool of interest.

To register, access the Microchip web site at www.microchip.com, click on Customer Change Notification and follow the registration instructions.

CUSTOMER SUPPORT

Users of Microchip products can receive assistance through several channels:

- Distributor or Representative
- Local Sales Office
- Field Application Engineer (FAE)
- Technical Support
- Development Systems Information Line

Customers should contact their distributor, representative or field application engineer (FAE) for support. Local sales offices are also available to help customers. A listing of sales offices and locations is included in the back of this document.

Technical support is available through the web site at: http://support.microchip.com

READER RESPONSE

It is our intention to provide you with the best documentation possible to ensure successful use of your Microchip product. If you wish to provide your comments on organization, clarity, subject matter, and ways in which our documentation can better serve you, please FAX your comments to the Technical Publications Manager at (480) 792-4150.

Please list the following information, and use this outline to provide us with your comments about this document.

To: Technical Publications Manager Total Pages Sent _____

RE: Reader Response

From: Name _____

Company _____

Address _____

City / State / ZIP / Country _____

Telephone: (_____) _____ - _____ FAX: (_____) _____ - _____

Application (optional):

Would you like a reply?____Y ____N

Device: PIC12F508/509/16F505 Literature Number: DS41236E

Questions:

1. What are the best features of this document?

_____

_____

2. How does this document meet your hardware and software development needs?

_____

_____

3. Do you find the organization of this document easy to follow? If not, why?

_____

_____

4. What additions to the document do you think would enhance the structure and subject?

_____

_____

5. What deletions from the document could be made without affecting the overall usefulness?

_____

_____

6. Is there any incorrect or misleading information (what and where)?

_____

_____

7. How would you improve this document?

_____

_____

© 2009 Microchip Technology Inc.

PRODUCT IDENTIFICATION SYSTEM

To order or obtain information, e.g., on pricing or delivery, refer to the factory or the listed sales office.

PART NO.	X	/XX	XXX
Device	Temperature Range	Package	Pattern

Device:	PIC16F505 PIC12F508 PIC12F509 PIC16F505T(1) PIC12F508T(2) PIC12F509T(2)
Temperature Range:	I = -40°C to +85°C (Industrial) E = -40°C to +125°C (Extended)
Package:	MC = 8L DFN 2x3 (DUAL Flatpack No-Leads)(3, 4) MS = Micro-Small Outline Package (MSOP)(3, 4) P = Plastic (PDIP)(4) SL = 14L Small Outline, 3.90 mm (SOIC)(4) SN = 8L Small Outline, 3.90 mm Narrow (SOIC)(4) ST = Thin Shrink Small Outline (TSSOP)(4) MG = 16L QFN (3x3x0.9)(5)
Pattern:	Special Requirements

Note: Tape and Reel available for only the following packages: SOIC, MSOP and TSSOP.

Examples:

a) PIC12F508-E/P 301 = Extended Temp., PDIP package, QTP pattern #301

b) PIC12F508-I/SN = Industrial Temp., SOIC package

c) PIC12F508T-E/P = Extended Temp., PDIP package, Tape and Reel

Note 1: T = in tape and reel SOIC, TSSOP and QFN packages only

2: T = in tape and reel SOIC and MSOP packages only.

3: PIC12F508/PIC12F509 only.

4: Pb-free.

5: PIC16F505 only.

WORLDWIDE SALES AND SERVICE

AMERICAS

Corporate Office
2355 West Chandler Blvd.
Chandler, AZ 85224-6199
Tel: 480-792-7200
Fax: 480-792-7277
Technical Support:
http://support.microchip.com
Web Address:
www.microchip.com

Atlanta
Duluth, GA
Tel: 678-957-9614
Fax: 678-957-1455

Boston
Westborough, MA
Tel: 774-760-0087
Fax: 774-760-0088

Chicago
Itasca, IL
Tel: 630-285-0071
Fax: 630-285-0075

Cleveland
Independence, OH
Tel: 216-447-0464
Fax: 216-447-0643

Dallas
Addison, TX
Tel: 972-818-7423
Fax: 972-818-2924

Detroit
Farmington Hills, MI
Tel: 248-538-2250
Fax: 248-538-2260

Kokomo
Kokomo, IN
Tel: 765-864-8360
Fax: 765-864-8387

Los Angeles
Mission Viejo, CA
Tel: 949-462-9523
Fax: 949-462-9608

Santa Clara
Santa Clara, CA
Tel: 408-961-6444
Fax: 408-961-6445

Toronto
Mississauga, Ontario,
Canada
Tel: 905-673-0699
Fax: 905-673-6509

ASIA/PACIFIC

Asia Pacific Office
Suites 3707-14, 37th Floor
Tower 6, The Gateway
Harbour City, Kowloon
Hong Kong
Tel: 852-2401-1200
Fax: 852-2401-3431

Australia - Sydney
Tel: 61-2-9868-6733
Fax: 61-2-9868-6755

China - Beijing
Tel: 86-10-8528-2100
Fax: 86-10-8528-2104

China - Chengdu
Tel: 86-28-8665-5511
Fax: 86-28-8665-7889

China - Hong Kong SAR
Tel: 852-2401-1200
Fax: 852-2401-3431

China - Nanjing
Tel: 86-25-8473-2460
Fax: 86-25-8473-2470

China - Qingdao
Tel: 86-532-8502-7355
Fax: 86-532-8502-7205

China - Shanghai
Tel: 86-21-5407-5533
Fax: 86-21-5407-5066

China - Shenyang
Tel: 86-24-2334-2829
Fax: 86-24-2334-2393

China - Shenzhen
Tel: 86-755-8203-2660
Fax: 86-755-8203-1760

China - Wuhan
Tel: 86-27-5980-5300
Fax: 86-27-5980-5118

China - Xiamen
Tel: 86-592-2388138
Fax: 86-592-2388130

China - Xian
Tel: 86-29-8833-7252
Fax: 86-29-8833-7256

China - Zhuhai
Tel: 86-756-3210040
Fax: 86-756-3210049

ASIA/PACIFIC

India - Bangalore
Tel: 91-80-3090-4444
Fax: 91-80-3090-4080

India - New Delhi
Tel: 91-11-4160-8631
Fax: 91-11-4160-8632

India - Pune
Tel: 91-20-2566-1512
Fax: 91-20-2566-1513

Japan - Yokohama
Tel: 81-45-471- 6166
Fax: 81-45-471-6122

Korea - Daegu
Tel: 82-53-744-4301
Fax: 82-53-744-4302

Korea - Seoul
Tel: 82-2-554-7200
Fax: 82-2-558-5932 or
82-2-558-5934

Malaysia - Kuala Lumpur
Tel: 60-3-6201-9857
Fax: 60-3-6201-9859

Malaysia - Penang
Tel: 60-4-227-8870
Fax: 60-4-227-4068

Philippines - Manila
Tel: 63-2-634-9065
Fax: 63-2-634-9069

Singapore
Tel: 65-6334-8870
Fax: 65-6334-8850

Taiwan - Hsin Chu
Tel: 886-3-6578-300
Fax: 886-3-6578-370

Taiwan - Kaohsiung
Tel: 886-7-536-4818
Fax: 886-7-536-4803

Taiwan - Taipei
Tel: 886-2-2500-6610
Fax: 886-2-2508-0102

Thailand - Bangkok
Tel: 66-2-694-1351
Fax: 66-2-694-1350

EUROPE

Austria - Wels
Tel: 43-7242-2244-39
Fax: 43-7242-2244-393

Denmark - Copenhagen
Tel: 45-4450-2828
Fax: 45-4485-2829

France - Paris
Tel: 33-1-69-53-63-20
Fax: 33-1-69-30-90-79

Germany - Munich
Tel: 49-89-627-144-0
Fax: 49-89-627-144-44

Italy - Milan
Tel: 39-0331-742611
Fax: 39-0331-466781

Netherlands - Drunen
Tel: 31-416-690399
Fax: 31-416-690340

Spain - Madrid
Tel: 34-91-708-08-90
Fax: 34-91-708-08-91

UK - Wokingham
Tel: 44-118-921-5869
Fax: 44-118-921-5820

03/26/09

© 2009 Microchip Technology Inc.