| NO. CKTS | DIM. A | DIM. B |
|---|---|---|
| 2 | 5.08 .200 | 2.54 .100 |
| 3 | 7.62 .300 | 5.08 .200 |
| 4 | 10.16 .400 | 7.62 .300 |
| 5 | 12.70 .500 | 10.16 .400 |
| 6 | 15.24 .600 | 12.70 .500 |
| 7 | 17.78 .700 | 15.24 .600 |
| 8 | 20.32 .800 | 17.78 .700 |
| 9 | 22.86 .900 | 20.32 .800 |
| 10 | 25.40 1.000 | 22.86 .900 |
| 11 | 27.94 1.100 | 25.40 1.000 |
| 12 | 30.48 1.200 | 27.94 1.100 |
| 13 | 33.02 1.300 | 30.48 1.200 |
| 14 | 35.56 1.400 | 33.02 1.300 |
| 15 | 38.10 1.500 | 35.56 1.400 |
| 16 | 40.64 1.600 | 38.10 1.500 |
| 17 | 43.18 1.700 | 40.64 1.600 |
| 18 | 45.72 1.800 | 43.18 1.700 |
| 19 | 48.26 1.900 | 45.72 1.800 |
| 20 | 50.80 2.000 | 48.26 1.900 |
| 21 | 53.34 2.100 | 50.80 2.000 |
| 22 | 55.88 2.200 | 53.34 2.100 |
| 23 | 58.42 2.300 | 55.88 2.200 |
| 24 | 60.96 2.400 | 58.42 2.300 |
| 25 | 63.50 2.500 | 60.96 2.400 |
| 26 | 66.04 2.600 | 63.50 2.500 |
| 27 | 68.58 2.700 | 66.04 2.600 |
| 28 | 71.12 2.800 | 68.58 2.700 |
| 29 | 73.66 2.900 | 71.12 2.800 |
| 30 | 76.20 3.000 | 73.66 2.900 |
| 31 | 78.74 3.100 | 76.20 3.000 |
| 32 | 81.28 3.200 | 78.74 3.100 |
| 33 | 83.82 3.300 | 81.28 3.200 |
| 34 | 86.36 3.400 | 83.82 3.300 |
| 35 | 88.90 3.500 | 86.36 3.400 |
| 36 | 91.44 3.600 | 88.90 3.500 |

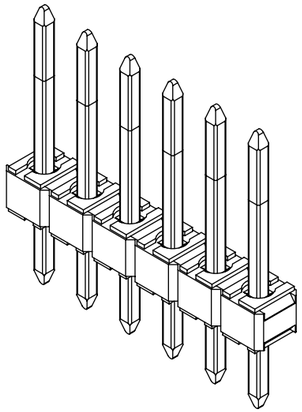

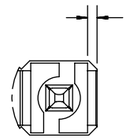


DETAIL Z

SCALE 5:1

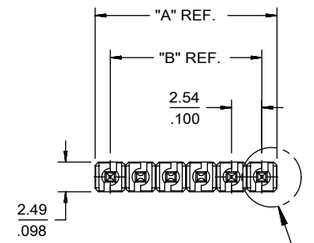


SEE DETAIL Z

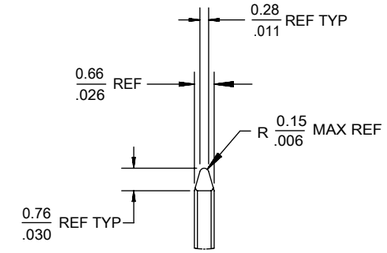


DETAIL Y

SCALE 5:1

SEE NOTE 10

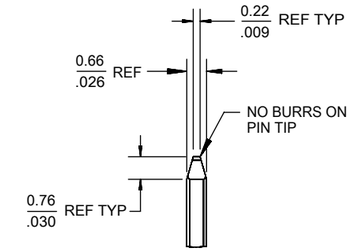


DETAIL X

SCALE 5:1

SEE NOTE 10

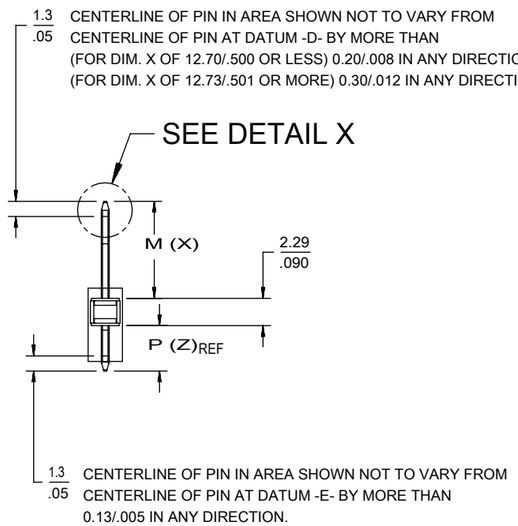


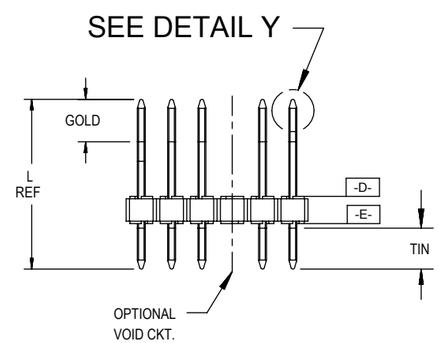

OPTIONAL KINK PIN

SEE NOTE 6

NOTES:

1. MATERIAL: GLASS FILLED NYLON
   U.L. 94V-0, COLOR: BLACK
2. FINISH: (SEE LAST 3 DIGITS OF PIN NUMBER)
   (154) OVERALL TIN: 0.00254/.000100 MIN. OVER
   NICKEL: 0.00127/.000050 MIN.
   (118) OVERALL TIN: 0.00152/.000060 MIN. OVER
   NICKEL: 0.00127/.000050 MIN.
   (208) SELECT GOLD: 0.00038/.000015 MIN,
   SELECT TIN: 0.00254/.000100 MIN,
   WITH OVERALL NICKEL UNDERPLATE: 0.00127/.000050 MIN.
   (228) SELECT GOLD: 0.00076/.000030 MIN,
   SELECT TIN: 0.00254/.000100 MIN,
   WITH OVERALL NICKEL UNDERPLATE: 0.00127/.000050 MIN.
3. PRODUCT SPECIFICATION PS-10-07.
4. PACKAGING INFORMATION: SEE TABLES
5. SOLDERABILITY PER SMES-152.
6. KINK PIN OPTION NOT RECOMMENDED FOR 2 CIRCUIT PARTS.
   HOLE SIZE MAY NEED TO BE ADJUSTED FOR 2 CIRCUIT PARTS
   WITH KINK OPTION FOR PROPER INSERTION INTO THE PCB.
   SEE SMES-42003 FOR ADDITIONAL INFORMATION
   ON KINK PIN DIRECTION AND PLACEMENT.
7. HEADERS ARE NOT STACKABLE ON 2.54/.100 CENTERS.
8. PIN PUSH OUT FORCE: 3 LBS. MIN
9. THIS PART CONFORMS TO CLASS B REQUIREMENTS OF COSMETIC
   SPECIFICATION PS-45499-002.
10. PIN TIP DIMENSIONS ARE SHOWN FOR REFERENCE ONLY.
    DIMENSIONS APPLY PRIOR TO PLATING OR ASSEMBLY.
11. TEXT ON PART IS FOR REFERENCE ONLY. TEXT AND TEXT LOCATION
    MAY VARY DEPENDING ON PART NUMBER AND/OR TOOL.

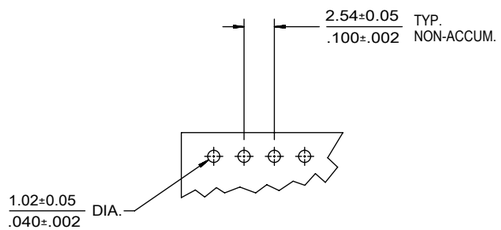


TYP. HOLE PATTERN
FOR 1.57/.062 THK. PCB

THIS DRAWING CONTAINS INFORMATION THAT IS PROPRIETARY TO MOLEX ELECTRONIC TECHNOLOGIES, LLC AND SHOULD NOT BE USED WITHOUT WRITTEN PERMISSION

SYMBOLS: = 0 (A) = 0 (B) = 0 (C) = 0 (D) = 0 (E) = 0 (F) = 0 (G) = 0

DIMENSION UNITS: MM/IN — SCALE: 2:1

GENERAL TOLERANCES (UNLESS SPECIFIED)

| | MM | INCH |
|---|---|---|
| 4 PLACES | ± | ± |
| 3 PLACES | ± | ± 0.01 |
| 2 PLACES | ± 0.25 | ± |
| 1 PLACE | ± 0.38 | ± |
| 0 PLACES | ± | ± |
| ANGULAR TOL | ± 0.5 ° | |

DRAFT WHERE APPLICABLE MUST REMAIN WITHIN DIMENSIONS

CURRENT REV DESC: GOLD LENGTH SPEC CHANGED AS MIN 2.54- MAX 5.54 FOR A-42375-0037/0071

EC NO: 689596

| | | |
|---|---|---|
| DRWN: | SHRUTJ | 2021/09/14 |
| CHK'D: | SHRUTJ | 2021/12/20 |
| APPR: | ISHWARG | 2021/12/20 |

INITIAL REVISION:

| | | |
|---|---|---|
| DRWN: | SCHAFER | 2003/02/11 |
| APPR: | MARGULIS | 2004/02/27 |

THIRD ANGLE PROJECTION

DRAWING: B-SIZE — SERIES: 42375

molex

KK 100 HEADER ASSY
FLAT VERTICAL BREAKAWAY

PRODUCT CUSTOMER DRAWING

| DOCUMENT NUMBER | DOC TYPE | DOC PART | REVISION |
|---|---|---|---|
| SD-42375-001 | PSD | 001 | V |

| MATERIAL NUMBER | CUSTOMER | SHEET NUMBER |
|---|---|---|
| SEE CHART | GENERAL MARKET | 1 OF 35 |

| DOCUMENT STATUS | P1 | RELEASE DATE | 2021/12/20 12:18:33 |
|---|---|---|---|

FORMAT: Eng-lega-master-tb-prod-B
REVISION: D
DATE: 2018/01/18

| ENG. NO: A-42375-0002/0036 | | | | | |
|---|---|---|---|---|---|
| HEADER NUMBER: | | | 42312-0036 | | |
| PIN NUMBER: | | | 42663-ABA154 | | |
| PIN LENGTH: L | | | .455 / 11.56 | | |
| MATING LENGTH: M | | | .240 / 6.09 | | |
| GOLD POINT: G | | | N/A | | |
| PC TAIL LENGTH: P | | | .125 / 3.18 | | |
| TIN: T | | | OVERALL | | |
| CKTS: | | | 2-36 | | |
| KINKS: | | | NO | | |
| VOIDED CKTS: | | | NONE | | |
| PACKAGING: | | | BULK PK-40873-0041 | | |
| CKTS | MATERIAL NUMBER | ENG NUMBER | CKTS | MATERIAL NUMBER | ENG MATERIAL |
| 2 | 22-28-4020 | A-42375-0002 | 20 | 22-28-4200 | 22-28-4200 |
| 3 | 22-28-4030 | A-42375-0003 | 21 | 22-28-4210 | 22-28-4210 |
| 4 | 22-28-4040 | A-42375-0004 | 22 | 22-28-4220 | 22-28-4220 |
| 5 | 22-28-4050 | A-42375-0005 | 23 | 22-28-4230 | 22-28-4230 |
| 6 | 22-28-4060 | A-42375-0006 | 24 | 22-28-4240 | 22-28-4240 |
| 7 | 22-28-4070 | A-42375-0007 | 25 | 22-28-4250 | 22-28-4250 |
| 8 | 22-28-4080 | A-42375-0008 | 26 | 22-28-4260 | 22-28-4260 |
| 9 | 22-28-4090 | A-42375-0009 | 27 | 22-28-4270 | 22-28-4270 |
| 10 | 22-28-4100 | A-42375-0010 | 28 | 22-28-4280 | 22-28-4280 |
| 11 | 22-28-4110 | A-42375-0011 | 29 | 22-28-4290 | 22-28-4290 |
| 12 | 22-28-4120 | A-42375-0012 | 30 | 22-28-4300 | 22-28-4300 |
| 13 | 22-28-4130 | A-42375-0013 | 31 | 22-28-4310 | 22-28-4310 |
| 14 | 22-28-4140 | A-42375-0014 | 32 | 22-28-4320 | 22-28-4320 |
| 15 | 22-28-4150 | A-42375-0015 | 33 | 22-28-4330 | 22-28-4330 |
| 16 | 22-28-4160 | A-42375-0016 | 34 | 22-28-4340 | 22-28-4340 |
| 17 | 22-28-4170 | A-42375-0017 | 35 | 22-28-4350 | 22-28-4350 |
| 18 | 22-28-4180 | A-42375-0018 | 36 | 22-28-4360 | 22-28-4360 |
| 19 | 22-28-4190 | A-42375-0019 | | | |

| ENG. NO: A-42375-0037/0071 | | | | | |
|---|---|---|---|---|---|
| HEADER NUMBER: | | | 42312-0036 | | |
| PIN NUMBER: | | | 42663-ABB208 | | |
| PIN LENGTH: L | | | .455 / 11.56 | | |
| MATING LENGTH: M | | | .240 / 6.09 | | |
| GOLD POINT: G | | | .100 / 2.54 Min - 0.218/5.54 Max | | |
| PC TAIL LENGTH: P | | | .125 / 3.18 | | |
| TIN: T | | | .100 / 2.54 | | |
| CKTS: | | | 2-36 | | |
| KINKS: | | | NO | | |
| VOIDED CKTS: | | | NONE | | |
| PACKAGING: | | | BULK PK-40873-0041 | | |
| CKTS | MATERIAL NUMBER | ENG NUMBER | CKTS | MATERIAL NUMBER | ENG MATERIAL |
| 2 | 22-28-4023 | A-42375-0037 | 20 | 22-28-4203 | A-42375-0055 |
| 3 | 22-28-4033 | A-42375-0038 | 21 | 22-28-4213 | A-42375-0056 |
| 4 | 22-28-4043 | A-42375-0039 | 22 | 22-28-4223 | A-42375-0057 |
| 5 | 22-28-4053 | A-42375-0040 | 23 | 22-28-4233 | A-42375-0058 |
| 6 | 22-28-4063 | A-42375-0041 | 24 | 22-28-4243 | A-42375-0059 |
| 7 | 22-28-4073 | A-42375-0042 | 25 | 22-28-4253 | A-42375-0060 |
| 8 | 22-28-4083 | A-42375-0043 | 26 | 22-28-4263 | A-42375-0061 |
| 9 | 22-28-4093 | A-42375-0044 | 27 | 22-28-4273 | A-42375-0062 |
| 10 | 22-28-4103 | A-42375-0045 | 28 | 22-28-4283 | A-42375-0063 |
| 11 | 22-28-4113 | A-42375-0046 | 29 | 22-28-4293 | A-42375-0064 |
| 12 | 22-28-4123 | A-42375-0047 | 30 | 22-28-4303 | A-42375-0065 |
| 13 | 22-28-4133 | A-42375-0048 | 31 | 22-28-4313 | A-42375-0066 |
| 14 | 22-28-4143 | A-42375-0049 | 32 | 22-28-4323 | A-42375-0067 |
| 15 | 22-28-4153 | A-42375-0050 | 33 | 22-28-4333 | A-42375-0068 |
| 16 | 22-28-4163 | A-42375-0051 | 34 | 22-28-4343 | A-42375-0069 |
| 17 | 22-28-4173 | A-42375-0052 | 35 | 22-28-4353 | A-42375-0070 |
| 18 | 22-28-4183 | A-42375-0053 | 36 | 22-28-4363 | A-42375-0071 |
| 19 | 22-28-4193 | A-42375-0054 | | | |

SYMBOLS

= 0
= 0
= 0
= 0
= 0
= 0
= 0
= 0
= 0

THIS DRAWING CONTAINS INFORMATION THAT IS PROPRIETARY TO MOLEX ELECTRONIC TECHNOLOGIES, LLC AND SHOULD NOT BE USED WITHOUT WRITTEN PERMISSION

DIMENSION UNITS: MM/IN
SCALE: 1:1

GENERAL TOLERANCES (UNLESS SPECIFIED)

| | MM | INCH |
|---|---|---|
| 4 PLACES | ± | ± |
| 3 PLACES | ± | ± 0.01 |
| 2 PLACES | ± 0.25 | ± |
| 1 PLACE | ± 0.38 | ± |
| 0 PLACES | ± | ± |
| ANGULAR TOL | ± 0.5 ° | |

DRAFT WHERE APPLICABLE MUST REMAIN WITHIN DIMENSIONS

CURRENT REV DESC: GOLD LENGTH SPEC CHANGED AS MIN 2.54- MAX 5.54 FOR A-42375-0037/0071

EC NO: 689596
DRWN: SHRUTJ 2021/09/14
CHK'D: SHRUTJ 2021/12/20
APPR: ISHWARG 2021/12/20

INITIAL REVISION:
DRWN: SCHAFER 2003/02/11
APPR: MARGULIS 2004/02/27

THIRD ANGLE PROJECTION | DRAWING: B-SIZE | SERIES: 42375

molex

KK 100 HEADER ASSY
FLAT VERTICAL BREAKAWAY

PRODUCT CUSTOMER DRAWING

| DOCUMENT NUMBER | DOC TYPE | DOC PART | REVISION |
|---|---|---|---|
| SD-42375-001 | PSD | 001 | V |

| MATERIAL NUMBER | CUSTOMER | SHEET NUMBER |
|---|---|---|
| SEE CHART | GENERAL MARKET | 2 OF 35 |

| DOCUMENT STATUS | P1 | RELEASE DATE | 2021/12/20 12:18:33 |
|---|---|---|---|

FORMAT: Eng-lega-master-tb-prod-B
REVISION: D
DATE: 2018/01/18

| ENG. NO: A-42375-0072/0106 | | | | | |
|---|---|---|---|---|---|
| HEADER NUMBER: | | | 42312-0036 | | |
| PIN NUMBER: | | | 42663-ABB228 | | |
| PIN LENGTH: L | | | .455 / 11.56 | | |
| MATING LENGTH: M | | | .240 / 6.09 | | |
| GOLD POINT: G | | | .100 / 2.54 | | |
| PC TAIL LENGTH: P | | | .125 / 3.18 | | |
| TIN: T | | | .100 / 2.54 | | |
| CKTS: | | | 2-36 | | |
| KINKS: | | | NO | | |
| VOIDED CKTS: | | | NONE | | |
| PACKAGING: | | | BULK PK-40873-0041 | | |
| CKTS | MATERIAL NUMBER | ENG NUMBER | CKTS | MATERIAL NUMBER | ENG NUMBER |
| 2 | 22-28-4026 | A-42375-0072 | 20 | 22-28-4206 | A-42375-0090 |
| 3 | 22-28-4036 | A-42375-0073 | 21 | 22-28-4216 | A-42375-0091 |
| 4 | 22-28-4046 | A-42375-0074 | 22 | 22-28-4226 | A-42375-0092 |
| 5 | 22-28-4056 | A-42375-0075 | 23 | 22-28-4236 | A-42375-0093 |
| 6 | 22-28-4066 | A-42375-0076 | 24 | 22-28-4246 | A-42375-0094 |
| 7 | 22-28-4076 | A-42375-0077 | 25 | 22-28-4256 | A-42375-0095 |
| 8 | 22-28-4086 | A-42375-0078 | 26 | 22-28-4266 | A-42375-0096 |
| 9 | 22-28-4096 | A-42375-0079 | 27 | 22-28-4276 | A-42375-0097 |
| 10 | 22-28-4106 | A-42375-0080 | 28 | 22-28-4286 | A-42375-0098 |
| 11 | 22-28-4116 | A-42375-0081 | 29 | 22-28-4296 | A-42375-0099 |
| 12 | 22-28-4126 | A-42375-0082 | 30 | 22-28-4306 | A-42375-0100 |
| 13 | 22-28-4136 | A-42375-0083 | 31 | 22-28-4316 | A-42375-0101 |
| 14 | 22-28-4146 | A-42375-0084 | 32 | 22-28-4326 | A-42375-0102 |
| 15 | 22-28-4156 | A-42375-0085 | 33 | 22-28-4336 | A-42375-0103 |
| 16 | 22-28-4166 | A-42375-0086 | 34 | 22-28-4346 | A-42375-0104 |
| 17 | 22-28-4176 | A-42375-0087 | 35 | 22-28-4356 | A-42375-0105 |
| 18 | 22-28-4186 | A-42375-0088 | 36 | 22-28-4366 | A-42375-0106 |
| 19 | 22-28-4196 | A-42375-0089 | | | |

| ENG. NO: A-42375-0107/0141 | | | | | |
|---|---|---|---|---|---|
| HEADER NUMBER: | | | 42312-0036 | | |
| PIN NUMBER: | | | 42663-ATA154 | | |
| PIN LENGTH: L | | | .530 / 13.46 | | |
| MATING LENGTH: M | | | .320 / 8.13 | | |
| GOLD POINT: G | | | N/A | | |
| PC TAIL LENGTH: P | | | .120 / 3.05 | | |
| TIN: T | | | .120 / 3.05 | | |
| CKTS: | | | 2-36 | | |
| KINKS: | | | NO | | |
| VOIDED CKTS: | | | NONE | | |
| PACKAGING: | | | BULK PK-40873-0041 | | |
| CKTS | MATERIAL NUMBER | ENG NUMBER | CKTS | MATERIAL NUMBER | ENG NUMBER |
| 2 | 22-28-4021 | A-42375-0107 | 20 | 22-28-4201 | A-42375-0125 |
| 3 | 22-28-4031 | A-42375-0108 | 21 | 22-28-4211 | A-42375-0126 |
| 4 | 22-28-4041 | A-42375-0109 | 22 | 22-28-4221 | A-42375-0127 |
| 5 | 22-28-4051 | A-42375-0110 | 23 | 22-28-4231 | A-42375-0128 |
| 6 | 22-28-4061 | A-42375-0111 | 24 | 22-28-4241 | A-42375-0129 |
| 7 | 22-28-4071 | A-42375-0112 | 25 | 22-28-4251 | A-42375-0130 |
| 8 | 22-28-4081 | A-42375-0113 | 26 | 22-28-4261 | A-42375-0131 |
| 9 | 22-28-4091 | A-42375-0114 | 27 | 22-28-4271 | A-42375-0132 |
| 10 | 22-28-4101 | A-42375-0115 | 28 | 22-28-4281 | A-42375-0133 |
| 11 | 22-28-4111 | A-42375-0116 | 29 | 22-28-4291 | A-42375-0134 |
| 12 | 22-28-4121 | A-42375-0117 | 30 | 22-28-4301 | A-42375-0135 |
| 13 | 22-28-4131 | A-42375-0118 | 31 | 22-28-4311 | A-42375-0136 |
| 14 | 22-28-4141 | A-42375-0119 | 32 | 22-28-4321 | A-42375-0137 |
| 15 | 22-28-4151 | A-42375-0120 | 33 | 22-28-4331 | A-42375-0138 |
| 16 | 22-28-4161 | A-42375-0121 | 34 | 22-28-4341 | A-42375-0139 |
| 17 | 22-28-4171 | A-42375-0122 | 35 | 22-28-4351 | A-42375-0140 |
| 18 | 22-28-4181 | A-42375-0123 | 36 | 22-28-4361 | A-42375-0141 |
| 19 | 22-28-4191 | A-42375-0124 | | | |

SYMBOLS

E = 0
C = 0
B = 0
D = 0
▼ = 0
A = 0
☒ = 0
■ = 0
▽ = 0

THIS DRAWING CONTAINS INFORMATION THAT IS PROPRIETARY TO MOLEX ELECTRONIC TECHNOLOGIES, LLC AND SHOULD NOT BE USED WITHOUT WRITTEN PERMISSION

DIMENSION UNITS: MM/IN
SCALE: 1:1

GENERAL TOLERANCES (UNLESS SPECIFIED)

| | MM | INCH |
|---|---|---|
| 4 PLACES | ± | ± |
| 3 PLACES | ± | ± 0.01 |
| 2 PLACES | ± 0.25 | ± |
| 1 PLACE | ± 0.38 | ± |
| 0 PLACES | ± | ± |
| ANGULAR TOL | ± 0.5 ° | |

DRAFT WHERE APPLICABLE MUST REMAIN WITHIN DIMENSIONS

CURRENT REV DESC: GOLD LENGTH SPEC CHANGED AS MIN 2.54- MAX 5.54 FOR A-42375-0037/0071

EC NO: 689596
DRWN: SHRUTJ 2021/09/14
CHK'D: SHRUTJ 2021/12/20
APPR: ISHWARG 2021/12/20

INITIAL REVISION:
DRWN: SCHAFER 2003/02/11
APPR: MARGULIS 2004/02/27

THIRD ANGLE PROJECTION
DRAWING: B-SIZE
SERIES: 42375

molex

KK 100 HEADER ASSY
FLAT VERTICAL BREAKAWAY

PRODUCT CUSTOMER DRAWING

| DOCUMENT NUMBER | DOC TYPE | DOC PART | REVISION |
|---|---|---|---|
| SD-42375-001 | PSD | 001 | V |

| MATERIAL NUMBER | CUSTOMER | SHEET NUMBER |
|---|---|---|
| SEE CHART | GENERAL MARKET | 3 OF 35 |

| DOCUMENT STATUS | P1 | RELEASE DATE | 2021/12/20 12:18:33 |
|---|---|---|---|

FORMAT: Eng-lega-master-tb-prod-B
REVISION: D
DATE: 2018/01/18

| ENG. NO: A-42375-0142/0176 | | | | | |
|---|---|---|---|---|---|
| HEADER NUMBER: | | | 42312-0036 | | |
| PIN NUMBER: | | | 42663-ATB208 | | |
| PIN LENGTH: L | | | .530 / 13.46 | | |
| MATING LENGTH: M | | | 320 / 8.13 | | |
| GOLD POINT: G | | | .140 / 3.56 | | |
| PC TAIL LENGTH: P | | | .120 / 3.05 | | |
| TIN: T | | | .135 / 3.43 | | |
| CKTS: | | | 2-36 | | |
| KINKS: | | | NO | | |
| VOIDED CKTS: | | | NONE | | |
| PACKAGING: | | | BULK PK-40873-0041 | | |
| CKTS | MATERIAL NUMBER | ENG NUMBER | CKTS | MATERIAL NUMBER | ENG NUMBER |
| 2 | 22-28-4024 | A-42375-0142 | 20 | 22-28-4204 | A-42375-0160 |
| 3 | 22-28-4035 | A-42375-0143 | 21 | 22-28-4214 | A-42375-0161 |
| 4 | 22-28-4044 | A-42375-0144 | 22 | 22-28-4224 | A-42375-0162 |
| 5 | 22-28-4054 | A-42375-0145 | 23 | 22-28-4234 | A-42375-0163 |
| 6 | 22-28-4064 | A-42375-0146 | 24 | 22-28-4244 | A-42375-0164 |
| 7 | 22-28-4074 | A-42375-0147 | 25 | 22-28-4254 | A-42375-0165 |
| 8 | 22-28-4084 | A-42375-0148 | 26 | 22-28-4264 | A-42375-0166 |
| 9 | 22-28-4094 | A-42375-0149 | 27 | 22-28-4274 | A-42375-0167 |
| 10 | 22-28-4104 | A-42375-0150 | 28 | 22-28-4284 | A-42375-0168 |
| 11 | 22-28-4114 | A-42375-0151 | 29 | 22-28-4294 | A-42375-0169 |
| 12 | 22-28-4124 | A-42375-0152 | 30 | 22-28-4304 | A-42375-0170 |
| 13 | 22-28-4134 | A-42375-0153 | 31 | 22-28-4314 | A-42375-0171 |
| 14 | 22-28-4144 | A-42375-0154 | 32 | 22-28-4324 | A-42375-0172 |
| 15 | 22-28-4154 | A-42375-0155 | 33 | 22-28-4334 | A-42375-0173 |
| 16 | 22-28-4164 | A-42375-0156 | 34 | 22-28-4344 | A-42375-0174 |
| 17 | 22-28-4174 | A-42375-0157 | 35 | 22-28-4354 | A-42375-0175 |
| 18 | 22-28-4184 | A-42375-0158 | 36 | 22-28-4364 | A-42375-0176 |
| 19 | 22-28-4194 | A-42375-0159 | | | |

| ENG. NO: A-42375-0177/0211 | | | | | |
|---|---|---|---|---|---|
| HEADER NUMBER: | | | 42312-0036 | | |
| PIN NUMBER: | | | 42663-ATB208 | | |
| PIN LENGTH: L | | | .530 / 13.46 | | |
| MATING LENGTH: M | | | 320 / 8.13 | | |
| GOLD POINT: G | | | .140 / 3.56 | | |
| PC TAIL LENGTH: P | | | .120 / 3.05 | | |
| TIN: T | | | .135 / 3.43 | | |
| CKTS: | | | 2-36 | | |
| KINKS: | | | NO | | |
| VOIDED CKTS: | | | NONE | | |
| PACKAGING: | | | BULK PK-40873-0041 | | |
| CKTS | MATERIAL NUMBER | ENG NUMBER | CKTS | MATERIAL NUMBER | ENG NUMBER |
| 2 | 22-28-4027 | A-42375-0177 | 20 | 22-28-4207 | A-42375-0195 |
| 3 | 22-28-4037 | A-42375-0178 | 21 | 22-28-4217 | A-42375-0196 |
| 4 | 22-28-4047 | A-42375-0179 | 22 | 22-28-4227 | A-42375-0197 |
| 5 | 22-28-4057 | A-42375-0180 | 23 | 22-28-4237 | A-42375-0198 |
| 6 | 22-28-4067 | A-42375-0181 | 24 | 22-28-4247 | A-42375-0199 |
| 7 | 22-28-4077 | A-42375-0182 | 25 | 22-28-4257 | A-42375-0200 |
| 8 | 22-28-4087 | A-42375-0183 | 26 | 22-28-4267 | A-42375-0201 |
| 9 | 22-28-4097 | A-42375-0184 | 27 | 22-28-4277 | A-42375-0202 |
| 10 | 22-28-4107 | A-42375-0185 | 28 | 22-28-4287 | A-42375-0203 |
| 11 | 22-28-4117 | A-42375-0186 | 29 | 22-28-4297 | A-42375-0204 |
| 12 | 22-28-4127 | A-42375-0187 | 30 | 22-28-4307 | A-42375-0205 |
| 13 | 22-28-4137 | A-42375-0188 | 31 | 22-28-4317 | A-42375-0206 |
| 14 | 22-28-4147 | A-42375-0189 | 32 | 22-28-4327 | A-42375-0207 |
| 15 | 22-28-4157 | A-42375-0190 | 33 | 22-28-4337 | A-42375-0208 |
| 16 | 22-28-4167 | A-42375-0191 | 34 | 22-28-4347 | A-42375-0209 |
| 17 | 22-28-4177 | A-42375-0192 | 35 | 22-28-4357 | A-42375-0210 |
| 18 | 22-28-4187 | A-42375-0193 | 36 | 22-28-4367 | A-42375-0211 |
| 19 | 22-28-4197 | A-42375-0194 | | | |

SYMBOLS

= 0
= 0
= 0
= 0
= 0
= 0
= 0
= 0
= 0

THIS DRAWING CONTAINS INFORMATION THAT IS PROPRIETARY TO MOLEX ELECTRONIC TECHNOLOGIES, LLC AND SHOULD NOT BE USED WITHOUT WRITTEN PERMISSION

DIMENSION UNITS: MM/IN
SCALE: 1:1

GENERAL TOLERANCES (UNLESS SPECIFIED)

| | MM | INCH |
|---|---|---|
| 4 PLACES | ± | ± |
| 3 PLACES | ± | ± 0.01 |
| 2 PLACES | ± 0.25 | ± |
| 1 PLACE | ± 0.38 | ± |
| 0 PLACES | ± | ± |
| ANGULAR TOL | ± 0.5 ° | |

DRAFT WHERE APPLICABLE MUST REMAIN WITHIN DIMENSIONS

CURRENT REV DESC: GOLD LENGTH SPEC CHANGED AS MIN 2.54- MAX 5.54 FOR A-42375-0037/0071

EC NO: 689596
DRWN: SHRUTJ 2021/09/14
CHK'D: SHRUTJ 2021/12/20
APPR: ISHWARG 2021/12/20

INITIAL REVISION:
DRWN: SCHAFER 2003/02/11
APPR: MARGULIS 2004/02/27

THIRD ANGLE PROJECTION

DRAWING: B-SIZE
SERIES: 42375

molex

KK 100 HEADER ASSY
FLAT VERTICAL BREAKAWAY

PRODUCT CUSTOMER DRAWING

| DOCUMENT NUMBER | DOC TYPE | DOC PART | REVISION |
|---|---|---|---|
| SD-42375-001 | PSD | 001 | V |

| MATERIAL NUMBER | CUSTOMER | SHEET NUMBER |
|---|---|---|
| SEE CHART | GENERAL MARKET | 4 OF 35 |

| DOCUMENT STATUS | P1 | RELEASE DATE | 2021/12/20 12:18:33 |
|---|---|---|---|

FORMAT: Eng-lega-master-tb-prod-B
REVISION: D
DATE: 2018/01/18

| ENG. NO: A-42375-0212/0246 | |
|---|---|
| HEADER NUMBER: | 42312-0036 |
| PIN NUMBER: | 42663-AMA154 |
| PIN LENGTH: L | .505 / 12.83 |
| MATING LENGTH: M | .295 / 7.49 |
| GOLD POINT: G | N/A |
| PC TAIL LENGTH: P | .120 / 3.05 |
| TIN: T | OVERALL |
| CKTS: | 2-36 |
| KINKS: | NO |
| VOIDED CKTS: | NONE |
| PACKAGING: | BULK PK-40873-0041 |

| CKTS | MATERIAL NUMBER | ENG NUMBER | CKTS | MATERIAL NUMBER | ENG NUMBER |
|---|---|---|---|---|---|
| 2 | 22-28-4022 | A-42375-0212 | 20 | 22-28-4202 | A-42375-0230 |
| 3 | 22-28-4032 | A-42375-0213 | 21 | 22-28-4212 | A-42375-0231 |
| 4 | 22-28-4042 | A-42375-0214 | 22 | 22-28-4222 | A-42375-0232 |
| 5 | 22-28-4052 | A-42375-0215 | 23 | 22-28-4232 | A-42375-0233 |
| 6 | 22-28-4062 | A-42375-0216 | 24 | 22-28-4242 | A-42375-0234 |
| 7 | 22-28-4072 | A-42375-0217 | 25 | 22-28-4252 | A-42375-0235 |
| 8 | 22-28-4082 | A-42375-0218 | 26 | 22-28-4262 | A-42375-0236 |
| 9 | 22-28-4092 | A-42375-0219 | 27 | 22-28-4272 | A-42375-0237 |
| 10 | 22-28-4102 | A-42375-0220 | 28 | 22-28-4282 | A-42375-0238 |
| 11 | 22-28-4112 | A-42375-0221 | 29 | 22-28-4292 | A-42375-0239 |
| 12 | 22-28-4122 | A-42375-0222 | 30 | 22-28-4302 | A-42375-0240 |
| 13 | 22-28-4132 | A-42375-0223 | 31 | 22-28-4312 | A-42375-0241 |
| 14 | 22-28-4142 | A-42375-0224 | 32 | 22-28-4322 | A-42375-0242 |
| 15 | 22-28-4152 | A-42375-0225 | 33 | 22-28-4332 | A-42375-0243 |
| 16 | 22-28-4162 | A-42375-0226 | 34 | 22-28-4342 | A-42375-0244 |
| 17 | 22-28-4172 | A-42375-0227 | 35 | 22-28-4352 | A-42375-0245 |
| 18 | 22-28-4182 | A-42375-0228 | 36 | 22-28-4362 | A-42375-0246 |
| 19 | 22-28-4192 | A-42375-0229 | | | |

| ENG. NO: A-42375-0247/0281 | |
|---|---|
| HEADER NUMBER: | 42312-0036 |
| PIN NUMBER: | 42663-ATB208 |
| PIN LENGTH: L | .505 / 12.83 |
| MATING LENGTH: M | .295 / 7.49 |
| GOLD POINT: G | .140 / 3.56 |
| PC TAIL LENGTH: P | .120 / 3.05 |
| TIN: T | .135 / 3.43 |
| CKTS: | 2-36 |
| KINKS: | NO |
| VOIDED CKTS: | NONE |
| PACKAGING: | BULK PK-40873-0041 |

| CKTS | MATERIAL NUMBER | ENG NUMBER | CKTS | MATERIAL NUMBER | ENG NUMBER |
|---|---|---|---|---|---|
| 2 | 22-28-4025 | A-42375-0247 | 20 | 22-28-4205 | A-42375-0265 |
| 3 | 22-28-4035 | A-42375-0248 | 21 | 22-28-4215 | A-42375-0266 |
| 4 | 22-28-4045 | A-42375-0249 | 22 | 22-28-4225 | A-42375-0267 |
| 5 | 22-28-4055 | A-42375-0250 | 23 | 22-28-4235 | A-42375-0268 |
| 6 | 22-28-4065 | A-42375-0251 | 24 | 22-28-4245 | A-42375-0269 |
| 7 | 22-28-4075 | A-42375-0252 | 25 | 22-28-4255 | A-42375-0270 |
| 8 | 22-28-4085 | A-42375-0253 | 26 | 22-28-4265 | A-42375-0271 |
| 9 | 22-28-4095 | A-42375-0254 | 27 | 22-28-4275 | A-42375-0272 |
| 10 | 22-28-4105 | A-42375-0255 | 28 | 22-28-4285 | A-42375-0273 |
| 11 | 22-28-4115 | A-42375-0256 | 29 | 22-28-4295 | A-42375-0274 |
| 12 | 22-28-4125 | A-42375-0257 | 30 | 22-28-4305 | A-42375-0275 |
| 13 | 22-28-4135 | A-42375-0258 | 31 | 22-28-4315 | A-42375-0276 |
| 14 | 22-28-4145 | A-42375-0259 | 32 | 22-28-4325 | A-42375-0277 |
| 15 | 22-28-4155 | A-42375-0260 | 33 | 22-28-4335 | A-42375-0278 |
| 16 | 22-28-4165 | A-42375-0261 | 34 | 22-28-4345 | A-42375-0279 |
| 17 | 22-28-4175 | A-42375-0262 | 35 | 22-28-4355 | A-42375-0280 |
| 18 | 22-28-4185 | A-42375-0263 | 36 | 22-28-4365 | A-42375-0281 |
| 19 | 22-28-4195 | A-42375-0264 | | | |

SYMBOLS: 5 = 0; 6 = 0; 7 = 0; 5 = 0; ▼ = 0; 4 = 0; ☒ = 0; ■ = 0; 3 = 0

THIS DRAWING CONTAINS INFORMATION THAT IS PROPRIETARY TO MOLEX ELECTRONIC TECHNOLOGIES, LLC AND SHOULD NOT BE USED WITHOUT WRITTEN PERMISSION

DIMENSION UNITS: MM/IN — SCALE: 1:1

GENERAL TOLERANCES (UNLESS SPECIFIED)

| | MM | INCH |
|---|---|---|
| 4 PLACES | ± | ± |
| 3 PLACES | ± | ± 0.01 |
| 2 PLACES | ± 0.25 | ± |
| 1 PLACE | ± 0.38 | ± |
| 0 PLACES | ± | ± |
| ANGULAR TOL | ± 0.5 ° | |

DRAFT WHERE APPLICABLE MUST REMAIN WITHIN DIMENSIONS

CURRENT REV DESC: GOLD LENGTH SPEC CHANGED AS MIN 2.54- MAX 5.54 FOR A-42375-0037/0071

EC NO: 689596
DRWN: SHRUTJ 2021/09/14
CHK'D: SHRUTJ 2021/12/20
APPR: ISHWARG 2021/12/20

INITIAL REVISION:
DRWN: SCHAFER 2003/02/11
APPR: MARGULIS 2004/02/27

THIRD ANGLE PROJECTION — DRAWING: B-SIZE — SERIES: 42375

molex

KK 100 HEADER ASSY
FLAT VERTICAL BREAKAWAY

PRODUCT CUSTOMER DRAWING

| DOCUMENT NUMBER | DOC TYPE | DOC PART | REVISION |
|---|---|---|---|
| SD-42375-001 | PSD | 001 | V |

| MATERIAL NUMBER | CUSTOMER | SHEET NUMBER |
|---|---|---|
| SEE CHART | GENERAL MARKET | 5 OF 35 |

| DOCUMENT STATUS | P1 | RELEASE DATE | 2021/12/20 12:18:33 |
|---|---|---|---|

FORMAT: Eng-tega-master-tb-prod-B
REVISION: D
DATE: 2018/01/18

| ENG. NO: A-42375-0282/0316 | | | | | |
|---|---|---|---|---|---|
| HEADER NUMBER: | | | 42312-0036 | | |
| PIN NUMBER: | | | 42663-AMB228 | | |
| PIN LENGTH: L | | | .505 / 12.83 | | |
| MATING LENGTH: M | | | .295 / 7.49 | | |
| GOLD POINT: G | | | .140 / 3.56 | | |
| PC TAIL LENGTH: P | | | .120 / 3.05 | | |
| TIN: T | | | .135 / 3.43 | | |
| CKTS: | | | 2-36 | | |
| KINKS: | | | NO | | |
| VOIDED CKTS: | | | NONE | | |
| PACKAGING: | | | BULK PK-40873-0041 | | |
| CKTS | MATERIAL NUMBER | ENG NUMBER | CKTS | MATERIAL NUMBER | ENG NUMBER |
| 2 | 22-28-4028 | A-42375-0282 | 20 | 22-28-4208 | A-42375-0300 |
| 3 | 22-28-4038 | A-42375-0283 | 21 | 22-28-4218 | A-42375-0301 |
| 4 | 22-28-4048 | A-42375-0284 | 22 | 22-28-4228 | A-42375-0302 |
| 5 | 22-28-4058 | A-42375-0285 | 23 | 22-28-4238 | A-42375-0303 |
| 6 | 22-28-4068 | A-42375-0286 | 24 | 22-28-4248 | A-42375-0304 |
| 7 | 22-28-4078 | A-42375-0287 | 25 | 22-28-4258 | A-42375-0305 |
| 8 | 22-28-4088 | A-42375-0288 | 26 | 22-28-4268 | A-42375-0306 |
| 9 | 22-28-4098 | A-42375-0289 | 27 | 22-28-4278 | A-42375-0307 |
| 10 | 22-28-4108 | A-42375-0290 | 28 | 22-28-4288 | A-42375-0308 |
| 11 | 22-28-4118 | A-42375-0291 | 29 | 22-28-4298 | A-42375-0309 |
| 12 | 22-28-4128 | A-42375-0292 | 30 | 22-28-4308 | A-42375-0310 |
| 13 | 22-28-4138 | A-42375-0293 | 31 | 22-28-4318 | A-42375-0311 |
| 14 | 22-28-4148 | A-42375-0294 | 32 | 22-28-4328 | A-42375-0312 |
| 15 | 22-28-4158 | A-42375-0295 | 33 | 22-28-4338 | A-42375-0313 |
| 16 | 22-28-4168 | A-42375-0296 | 34 | 22-28-4348 | A-42375-0314 |
| 17 | 22-28-4178 | A-42375-0297 | 35 | 22-28-4358 | A-42375-0315 |
| 18 | 22-28-4188 | A-42375-0298 | 36 | 22-28-4368 | A-42375-0316 |
| 19 | 22-28-4198 | A-42375-0299 | | | |

| ENG. NO: A-42375-0317/0351 | | | | | |
|---|---|---|---|---|---|
| HEADER NUMBER: | | | 42312-0036 | | |
| PIN NUMBER: | | | 42663-ADA154 | | |
| PIN LENGTH: L | | | .465 / 11.81 | | |
| MATING LENGTH: M | | | .240 / 6.09 | | |
| GOLD POINT: G | | | N/A | | |
| PC TAIL LENGTH: P | | | .135 / 3.43 | | |
| TIN: T | | | OVERALL | | |
| CKTS: | | | 2-36 | | |
| KINKS: | | | SMES-42003 | | |
| VOIDED CKTS: | | | NONE | | |
| PACKAGING: | | | BULK PK-40873-0041 | | |
| CKTS | MATERIAL NUMBER | ENG NUMBER | CKTS | MATERIAL NUMBER | ENG NUMBER |
| 2 | 22-28-5020 | A-42375-0317 | 20 | 22-28-5200 | A-42375-0335 |
| 3 | 22-28-5030 | A-42375-0318 | 21 | 22-28-5201 | A-42375-0336 |
| 4 | 22-28-5040 | A-42375-0319 | 22 | 22-28-5202 | A-42375-0337 |
| 5 | 22-28-5050 | A-42375-0320 | 23 | 22-28-5203 | A-42375-0338 |
| 6 | 22-28-5060 | A-42375-0321 | 24 | 22-28-5204 | A-42375-0339 |
| 7 | 22-28-5070 | A-42375-0322 | 25 | 22-28-5205 | A-42375-0340 |
| 8 | 22-28-5080 | A-42375-0323 | 26 | 22-28-5206 | A-42375-0341 |
| 9 | 22-28-5090 | A-42375-0324 | 27 | 22-28-5207 | A-42375-0342 |
| 10 | 22-28-5100 | A-42375-0325 | 28 | 22-28-5208 | A-42375-0343 |
| 11 | 22-28-5110 | A-42375-0326 | 29 | 22-28-5209 | A-42375-0344 |
| 12 | 22-28-5120 | A-42375-0327 | 30 | 22-28-5300 | A-42375-0345 |
| 13 | 22-28-5130 | A-42375-0328 | 31 | 22-28-5310 | A-42375-0346 |
| 14 | 22-28-5140 | A-42375-0329 | 32 | 22-28-5320 | A-42375-0347 |
| 15 | 22-28-5150 | A-42375-0330 | 33 | 22-28-5330 | A-42375-0348 |
| 16 | 22-28-5160 | A-42375-0331 | 34 | 22-28-5340 | A-42375-0349 |
| 17 | 22-28-5170 | A-42375-0332 | 35 | 22-28-5350 | A-42375-0350 |
| 18 | 22-28-5180 | A-42375-0333 | 36 | 22-28-5360 | A-42375-0351 |
| 19 | 22-28-5190 | A-42375-0334 | | | |

THIS DRAWING CONTAINS INFORMATION THAT IS PROPRIETARY TO MOLEX ELECTRONIC TECHNOLOGIES, LLC AND SHOULD NOT BE USED WITHOUT WRITTEN PERMISSION

SYMBOLS: E = 0; E = 0; D = 0; C = 0; ▼ = 0; C = 0; ☒ = 0; ■ = 0; ▽ = 0

DIMENSION UNITS: MM/IN — SCALE: 1:1

GENERAL TOLERANCES (UNLESS SPECIFIED)

| | MM | INCH |
|---|---|---|
| 4 PLACES | ± | ± |
| 3 PLACES | ± | ± 0.01 |
| 2 PLACES | ± 0.25 | ± |
| 1 PLACE | ± 0.38 | ± |
| 0 PLACES | ± | ± |
| ANGULAR TOL | ± 0.5 ° | |

DRAFT WHERE APPLICABLE MUST REMAIN WITHIN DIMENSIONS

CURRENT REV DESC: GOLD LENGTH SPEC CHANGED AS MIN 2.54- MAX 5.54 FOR A-42375-0037/0071

EC NO: 689596
DRWN: SHRUTJ 2021/09/14
CHK'D: SHRUTJ 2021/12/20
APPR: ISHWARG 2021/12/20

INITIAL REVISION:
DRWN: SCHAFER 2003/02/11
APPR: MARGULIS 2004/02/27

THIRD ANGLE PROJECTION | DRAWING: B-SIZE | SERIES: 42375

molex

KK 100 HEADER ASSY
FLAT VERTICAL BREAKAWAY

PRODUCT CUSTOMER DRAWING

| DOCUMENT NUMBER | DOC TYPE | DOC PART | REVISION |
|---|---|---|---|
| SD-42375-001 | PSD | 001 | V |

| MATERIAL NUMBER | CUSTOMER | SHEET NUMBER |
|---|---|---|
| SEE CHART | GENERAL MARKET | 6 OF 35 |

| DOCUMENT STATUS | P1 | RELEASE DATE | 2021/12/20 12:18:33 |
|---|---|---|---|

FORMAT: Eng-lega-master-tb-prod-B
REVISION: D
DATE: 2018/01/18

| ENG. NO: A-42375-0352/0386 | | | | | |
|---|---|---|---|---|---|
| HEADER NUMBER: | | | 42312-0036 | | |
| PIN NUMBER: | | | 42663-ADB208 | | |
| PIN LENGTH: L | | | .465 / 11.81 | | |
| MATING LENGTH: M | | | .240 / 6.09 | | |
| GOLD POINT: G | | | .100 / 2.54 | | |
| PC TAIL LENGTH: P | | | .135 / 3.43 | | |
| TIN: T | | | .100 / 2.54 | | |
| CKTS: | | | 2-36 | | |
| KINKS: | | | SMES-42003 | | |
| VOIDED CKTS: | | | NONE | | |
| PACKAGING: | | | BULK PK-40873-0041 | | |
| CKTS | MATERIAL NUMBER | ENG NUMBER | CKTS | MATERIAL NUMBER | ENG NUMBER |
| 2 | 22-28-5023 | A-42375-0352 | 20 | 22-28-5203 | A-42375-0370 |
| 3 | 22-28-5033 | A-42375-0353 | 21 | 22-28-5213 | A-42375-0371 |
| 4 | 22-28-5043 | A-42375-0354 | 22 | 22-28-5223 | A-42375-0372 |
| 5 | 22-28-5053 | A-42375-0355 | 23 | 22-28-5233 | A-42375-0373 |
| 6 | 22-28-5063 | A-42375-0356 | 24 | 22-28-5243 | A-42375-0374 |
| 7 | 22-28-5073 | A-42375-0357 | 25 | 22-28-5253 | A-42375-0375 |
| 8 | 22-28-5083 | A-42375-0358 | 26 | 22-28-5263 | A-42375-0376 |
| 9 | 22-28-5093 | A-42375-0359 | 27 | 22-28-5273 | A-42375-0377 |
| 10 | 22-28-5103 | A-42375-0360 | 28 | 22-28-5283 | A-42375-0378 |
| 11 | 22-28-5113 | A-42375-0361 | 29 | 22-28-5293 | A-42375-0379 |
| 12 | 22-28-5123 | A-42375-0362 | 30 | 22-28-5303 | A-42375-0380 |
| 13 | 22-28-5133 | A-42375-0363 | 31 | 22-28-5313 | A-42375-0381 |
| 14 | 22-28-5143 | A-42375-0364 | 32 | 22-28-5323 | A-42375-0382 |
| 15 | 22-28-5153 | A-42375-0365 | 33 | 22-28-5333 | A-42375-0383 |
| 16 | 22-28-5163 | A-42375-0366 | 34 | 22-28-5343 | A-42375-0384 |
| 17 | 22-28-5173 | A-42375-0367 | 35 | 22-28-5353 | A-42375-0385 |
| 18 | 22-28-5183 | A-42375-0368 | 36 | 22-28-5363 | A-42375-0386 |
| 19 | 22-28-5193 | A-42375-0369 | | | |

| ENG. NO: A-42375-0387/0421 | | | | | |
|---|---|---|---|---|---|
| HEADER NUMBER: | | | 42312-0036 | | |
| PIN NUMBER: | | | 42663-ADB228 | | |
| PIN LENGTH: L | | | .465 / 11.81 | | |
| MATING LENGTH: M | | | .240 / 6.09 | | |
| GOLD POINT: G | | | .100 / 2.54 | | |
| PC TAIL LENGTH: P | | | .135 / 3.43 | | |
| TIN: T | | | .100 / 2.54 | | |
| CKTS: | | | 2-36 | | |
| KINKS: | | | SMES-42003 | | |
| VOIDED CKTS: | | | NONE | | |
| PACKAGING: | | | BULK PK-40873-0041 | | |
| CKTS | MATERIAL NUMBER | ENG NUMBER | CKTS | MATERIAL NUMBER | ENG NUMBER |
| 2 | 22-28-5026 | A-42375-0387 | 20 | 22-28-5206 | A-42375-0405 |
| 3 | 22-28-5036 | A-42375-0388 | 21 | 22-28-5216 | A-42375-0406 |
| 4 | 22-28-5046 | A-42375-0389 | 22 | 22-28-5226 | A-42375-0407 |
| 5 | 22-28-5056 | A-42375-0390 | 23 | 22-28-5236 | A-42375-0408 |
| 6 | 22-28-5066 | A-42375-0391 | 24 | 22-28-5246 | A-42375-0409 |
| 7 | 22-28-5076 | A-42375-0392 | 25 | 22-28-5256 | A-42375-0410 |
| 8 | 22-28-5086 | A-42375-0393 | 26 | 22-28-5266 | A-42375-0411 |
| 9 | 22-28-5096 | A-42375-0394 | 27 | 22-28-5276 | A-42375-0412 |
| 10 | 22-28-5106 | A-42375-0395 | 28 | 22-28-5286 | A-42375-0413 |
| 11 | 22-28-5116 | A-42375-0396 | 29 | 22-28-5296 | A-42375-0414 |
| 12 | 22-28-5126 | A-42375-0397 | 30 | 22-28-5306 | A-42375-0415 |
| 13 | 22-28-5136 | A-42375-0398 | 31 | 22-28-5316 | A-42375-0416 |
| 14 | 22-28-5146 | A-42375-0399 | 32 | 22-28-5326 | A-42375-0417 |
| 15 | 22-28-5156 | A-42375-0400 | 33 | 22-28-5336 | A-42375-0418 |
| 16 | 22-28-5166 | A-42375-0401 | 34 | 22-28-5346 | A-42375-0419 |
| 17 | 22-28-5176 | A-42375-0402 | 35 | 22-28-5356 | A-42375-0420 |
| 18 | 22-28-5186 | A-42375-0403 | 36 | 22-28-5366 | A-42375-0421 |
| 19 | 22-28-5196 | A-42375-0404 | | | |

| DOCUMENT STATUS | P1 | RELEASE DATE | 2021/12/20 12:18:33 |
|---|---|---|---|

FORMAT: Eng-lega-master-tb-prod-B
REVISION: D
DATE: 2018/01/18

SYMBOLS

= 0
= 0
= 0
= 0
= 0
= 0
= 0
= 0
= 0

THIS DRAWING CONTAINS INFORMATION THAT IS PROPRIETARY TO MOLEX ELECTRONIC TECHNOLOGIES, LLC AND SHOULD NOT BE USED WITHOUT WRITTEN PERMISSION

| DIMENSION UNITS | SCALE |
|---|---|
| MM/IN | 1:1 |

GENERAL TOLERANCES (UNLESS SPECIFIED)

| | MM | INCH |
|---|---|---|
| 4 PLACES | ± | ± |
| 3 PLACES | ± | ± 0.01 |
| 2 PLACES | ± 0.25 | ± |
| 1 PLACE | ± 0.38 | ± |
| 0 PLACES | ± | ± |
| ANGULAR TOL | ± 0.5 ° | |

DRAFT WHERE APPLICABLE MUST REMAIN WITHIN DIMENSIONS

CURRENT REV DESC: GOLD LENGTH SPEC CHANGED AS MIN 2.54- MAX 5.54 FOR A-42375-0037/0071

EC NO: 689596
DRWN: SHRUTJ 2021/09/14
CHK'D: SHRUTJ 2021/12/20
APPR: ISHWARG 2021/12/20

INITIAL REVISION:
DRWN: SCHAFER 2003/02/11
APPR: MARGULIS 2004/02/27

THIRD ANGLE PROJECTION

| DRAWING | SERIES |
|---|---|
| B-SIZE | 42375 |

molex

KK 100 HEADER ASSY
FLAT VERTICAL BREAKAWAY

PRODUCT CUSTOMER DRAWING

| DOCUMENT NUMBER | DOC TYPE | DOC PART | REVISION |
|---|---|---|---|
| SD-42375-001 | PSD | 001 | V |

| MATERIAL NUMBER | CUSTOMER | SHEET NUMBER |
|---|---|---|
| SEE CHART | GENERAL MARKET | 7 OF 35 |

| ENG. NO: A-42375-0422/0456 | | | | | |
|---|---|---|---|---|---|
| HEADER NUMBER: | | | 42312-0036 | | |
| PIN NUMBER: | | | 42663-AYA154 | | |
| PIN LENGTH: L | | | .545 / 13.84 | | |
| MATING LENGTH: M | | | .320 / 8.13 | | |
| GOLD POINT: G | | | N/A | | |
| PC TAIL LENGTH: P | | | .135 / 3.43 | | |
| TIN: T | | | OVERALL | | |
| CKTS: | | | 2-36 | | |
| KINKS: | | | SMES-42003 | | |
| VOIDED CKTS: | | | NONE | | |
| PACKAGING: | | | BULK PK-40873-0041 | | |
| CKTS | MATERIAL NUMBER | ENG NUMBER | CKTS | MATERIAL NUMBER | ENG NUMBER |
| 2 | 22-28-5021 | A-42375-0422 | 20 | 22-28-5201 | A-42375-0440 |
| 3 | 22-28-5031 | A-42375-0423 | 21 | 22-28-5211 | A-42375-0441 |
| 4 | 22-28-5041 | A-42375-0424 | 22 | 22-28-5221 | A-42375-0442 |
| 5 | 22-28-5051 | A-42375-0425 | 23 | 22-28-5231 | A-42375-0443 |
| 6 | 22-28-5061 | A-42375-0426 | 24 | 22-28-5241 | A-42375-0444 |
| 7 | 22-28-5071 | A-42375-0427 | 25 | 22-28-5251 | A-42375-0445 |
| 8 | 22-28-5081 | A-42375-0428 | 26 | 22-28-5261 | A-42375-0446 |
| 9 | 22-28-5091 | A-42375-0429 | 27 | 22-28-5271 | A-42375-0447 |
| 10 | 22-28-5101 | A-42375-0430 | 28 | 22-28-5281 | A-42375-0448 |
| 11 | 22-28-5111 | A-42375-0431 | 29 | 22-28-5291 | A-42375-0449 |
| 12 | 22-28-5121 | A-42375-0432 | 30 | 22-28-5301 | A-42375-0450 |
| 13 | 22-28-5131 | A-42375-0433 | 31 | 22-28-5311 | A-42375-0451 |
| 14 | 22-28-5141 | A-42375-0434 | 32 | 22-28-5321 | A-42375-0452 |
| 15 | 22-28-5151 | A-42375-0435 | 33 | 22-28-5331 | A-42375-0453 |
| 16 | 22-28-5161 | A-42375-0436 | 34 | 22-28-5341 | A-42375-0454 |
| 17 | 22-28-5171 | A-42375-0437 | 35 | 22-28-5351 | A-42375-0455 |
| 18 | 22-28-5181 | A-42375-0438 | 36 | 22-28-5361 | A-42375-0456 |
| 19 | 22-28-5191 | A-42375-0439 | | | |

| ENG. NO: A-42375-0457/0491 | | | | | |
|---|---|---|---|---|---|
| HEADER NUMBER: | | | 42312-0036 | | |
| PIN NUMBER: | | | 42663-ADB208 | | |
| PIN LENGTH: L | | | .545 / 13.84 | | |
| MATING LENGTH: M | | | .320 / 8.13 | | |
| GOLD POINT: G | | | .140 / 3.56 | | |
| PC TAIL LENGTH: P | | | .135 / 3.43 | | |
| TIN: T | | | .135 / 3.43 | | |
| CKTS: | | | 2-36 | | |
| KINKS: | | | SMES-42003 | | |
| VOIDED CKTS: | | | NONE | | |
| PACKAGING: | | | BULK PK-40873-0041 | | |
| CKTS | MATERIAL NUMBER | ENG NUMBER | CKTS | MATERIAL NUMBER | ENG NUMBER |
| 2 | 22-28-5024 | A-42375-0457 | 20 | 22-28-5204 | A-42375-0475 |
| 3 | 22-28-5034 | A-42375-0458 | 21 | 22-28-5214 | A-42375-0476 |
| 4 | 22-28-5044 | A-42375-0459 | 22 | 22-28-5224 | A-42375-0477 |
| 5 | 22-28-5054 | A-42375-0460 | 23 | 22-28-5234 | A-42375-0478 |
| 6 | 22-28-5064 | A-42375-0461 | 24 | 22-28-5244 | A-42375-0479 |
| 7 | 22-28-5074 | A-42375-0462 | 25 | 22-28-5254 | A-42375-0480 |
| 8 | 22-28-5084 | A-42375-0463 | 26 | 22-28-5264 | A-42375-0481 |
| 9 | 22-28-5094 | A-42375-0464 | 27 | 22-28-5274 | A-42375-0482 |
| 10 | 22-28-5104 | A-42375-0365 | 28 | 22-28-5284 | A-42375-0483 |
| 11 | 22-28-5114 | A-42375-0466 | 29 | 22-28-5294 | A-42375-044 |
| 12 | 22-28-5124 | A-42375-0467 | 30 | 22-28-5304 | A-42375-0485 |
| 13 | 22-28-5134 | A-42375-0468 | 31 | 22-28-5314 | A-42375-0486 |
| 14 | 22-28-5144 | A-42375-0469 | 32 | 22-28-5324 | A-42375-0487 |
| 15 | 22-28-5154 | A-42375-0470 | 33 | 22-28-5334 | A-42375-0488 |
| 16 | 22-28-5164 | A-42375-0471 | 34 | 22-28-5344 | A-42375-0489 |
| 17 | 22-28-5174 | A-42375-0472 | 35 | 22-28-5354 | A-42375-0490 |
| 18 | 22-28-5184 | A-42375-0473 | 36 | 22-28-5364 | A-42375-0491 |
| 19 | 22-28-5194 | A-42375-0474 | | | |

SYMBOLS

= 0
= 0
= 0
= 0
= 0
= 0
= 0
= 0
= 0

THIS DRAWING CONTAINS INFORMATION THAT IS PROPRIETARY TO MOLEX ELECTRONIC TECHNOLOGIES, LLC AND SHOULD NOT BE USED WITHOUT WRITTEN PERMISSION

DIMENSION UNITS: MM/IN
SCALE: 1:1

GENERAL TOLERANCES (UNLESS SPECIFIED)

| | MM | INCH |
|---|---|---|
| 4 PLACES | ± | ± |
| 3 PLACES | ± | ± 0.01 |
| 2 PLACES | ± 0.25 | ± |
| 1 PLACE | ± 0.38 | ± |
| 0 PLACES | ± | ± |
| ANGULAR TOL | ± 0.5 ° | |

DRAFT WHERE APPLICABLE MUST REMAIN WITHIN DIMENSIONS

CURRENT REV DESC: GOLD LENGTH SPEC CHANGED AS MIN 2.54- MAX 5.54 FOR A-42375-0037/0071

EC NO: 689596
DRWN: SHRUTJ 2021/09/14
CHK'D: SHRUTJ 2021/12/20
APPR: ISHWARG 2021/12/20

INITIAL REVISION:
DRWN: SCHAFER 2003/02/11
APPR: MARGULIS 2004/02/27

THIRD ANGLE PROJECTION

DRAWING: B-SIZE
SERIES: 42375

molex

KK 100 HEADER ASSY
FLAT VERTICAL BREAKAWAY

PRODUCT CUSTOMER DRAWING

| DOCUMENT NUMBER | DOC TYPE | DOC PART | REVISION |
|---|---|---|---|
| SD-42375-001 | PSD | 001 | V |

| MATERIAL NUMBER | CUSTOMER | SHEET NUMBER |
|---|---|---|
| SEE CHART | GENERAL MARKET | 8 OF 35 |

| DOCUMENT STATUS | P1 | RELEASE DATE | 2021/12/20 12:18:33 |
|---|---|---|---|

FORMAT: Eng-lega-master-tb-prod-B
REVISION: D
DATE: 2018/01/18

| ENG. NO: A-42375-0492/0526 | | | | | |
|---|---|---|---|---|---|
| HEADER NUMBER: | | | 42312-0036 | | |
| PIN NUMBER: | | | 42663-AYB228 | | |
| PIN LENGTH: L | | | .545 / 13.84 | | |
| MATING LENGTH: M | | | .320 / 8.13 | | |
| GOLD POINT: G | | | 140 / 3.56 | | |
| PC TAIL LENGTH: P | | | .135 / 3.43 | | |
| TIN: T | | | .135 / 3.43 | | |
| CKTS: | | | 2-36 | | |
| KINKS: | | | SMES-42003 | | |
| VOIDED CKTS: | | | NONE | | |
| PACKAGING: | | | BULK PK-40873-0041 | | |
| CKTS | MATERIAL NUMBER | ENG NUMBER | CKTS | MATERIAL NUMBER | ENG NUMBER |
| 2 | 22-28-5027 | A-42375-0492 | 20 | 22-28-5207 | A-42375-0510 |
| 3 | 22-28-5037 | A-42375-0493 | 21 | 22-28-5217 | A-42375-0511 |
| 4 | 22-28-5047 | A-42375-0494 | 22 | 22-28-5227 | A-42375-0512 |
| 5 | 22-28-5057 | A-42375-0495 | 23 | 22-28-5237 | A-42375-0513 |
| 6 | 22-28-5067 | A-42375-0496 | 24 | 22-28-5247 | A-42375-0514 |
| 7 | 22-28-5077 | A-42375-0497 | 25 | 22-28-5257 | A-42375-0515 |
| 8 | 22-28-5087 | A-42375-0498 | 26 | 22-28-5267 | A-42375-0516 |
| 9 | 22-28-5097 | A-42375-0499 | 27 | 22-28-5277 | A-42375-0517 |
| 10 | 22-28-5107 | A-42375-0500 | 28 | 22-28-5287 | A-42375-0518 |
| 11 | 22-28-5117 | A-42375-0501 | 29 | 22-28-5297 | A-42375-0519 |
| 12 | 22-28-5127 | A-42375-0502 | 30 | 22-28-5307 | A-42375-0520 |
| 13 | 22-28-5137 | A-42375-0503 | 31 | 22-28-5317 | A-42375-0521 |
| 14 | 22-28-5147 | A-42375-0504 | 32 | 22-28-5327 | A-42375-0522 |
| 15 | 22-28-5157 | A-42375-0505 | 33 | 22-28-5337 | A-42375-0523 |
| 16 | 22-28-5167 | A-42375-0506 | 34 | 22-28-5347 | A-42375-0524 |
| 17 | 22-28-5177 | A-42375-0507 | 35 | 22-28-5357 | A-42375-0525 |
| 18 | 22-28-5187 | A-42375-0508 | 36 | 22-28-5367 | A-42375-0526 |
| 19 | 22-28-5197 | A-42375-0509 | | | |

| ENG. NO: A-42375-0527/0561 | | | | | |
|---|---|---|---|---|---|
| HEADER NUMBER: | | | 42312-0036 | | |
| PIN NUMBER: | | | 42663-ARA154 | | |
| PIN LENGTH: L | | | .520 / 13.21 | | |
| MATING LENGTH: M | | | .295 / 7.49 | | |
| GOLD POINT: G | | | N/A | | |
| PC TAIL LENGTH: P | | | .135 / 3.43 | | |
| TIN: T | | | OVERALL | | |
| CKTS: | | | 2-36 | | |
| KINKS: | | | SMES-42003 | | |
| VOIDED CKTS: | | | NONE | | |
| PACKAGING: | | | BULK PK-40873-0041 | | |
| CKTS | MATERIAL NUMBER | ENG NUMBER | CKTS | MATERIAL NUMBER | ENG NUMBER |
| 2 | 22-28-5022 | A-42375-0527 | 20 | 22-28-5202 | A-42375-0545 |
| 3 | 22-28-5032 | A-42375-0528 | 21 | 22-28-5212 | A-42375-0546 |
| 4 | 22-28-5042 | A-42375-0529 | 22 | 22-28-5222 | A-42375-0547 |
| 5 | 22-28-5052 | A-42375-0530 | 23 | 22-28-5232 | A-42375-0548 |
| 6 | 22-28-5062 | A-42375-0531 | 24 | 22-28-5242 | A-42375-0549 |
| 7 | 22-28-5072 | A-42375-0532 | 25 | 22-28-5252 | A-42375-0550 |
| 8 | 22-28-5082 | A-42375-0533 | 26 | 22-28-5262 | A-42375-0551 |
| 9 | 22-28-5092 | A-42375-0534 | 27 | 22-28-5272 | A-42375-0552 |
| 10 | 22-28-5102 | A-42375-0435 | 28 | 22-28-5282 | A-42375-0553 |
| 11 | 22-28-5112 | A-42375-0536 | 29 | 22-28-5292 | A-42375-0554 |
| 12 | 22-28-5122 | A-42375-0537 | 30 | 22-28-5302 | A-42375-0555 |
| 13 | 22-28-5132 | A-42375-0538 | 31 | 22-28-5312 | A-42375-0556 |
| 14 | 22-28-5142 | A-42375-0539 | 32 | 22-28-5322 | A-42375-0557 |
| 15 | 22-28-5152 | A-42375-0540 | 33 | 22-28-5332 | A-42375-0558 |
| 16 | 22-28-5162 | A-42375-0541 | 34 | 22-28-5342 | A-42375-0559 |
| 17 | 22-28-5172 | A-42375-0542 | 35 | 22-28-5352 | A-42375-0560 |
| 18 | 22-28-5182 | A-42375-0543 | 36 | 22-28-5362 | A-42375-0561 |
| 19 | 22-28-5192 | A-42375-0544 | | | |

| DOCUMENT STATUS | P1 | RELEASE DATE | 2021/12/20 12:18:33 |
|---|---|---|---|

FORMAT: Eng-lega-master-tb-prod-B
REVISION: D
DATE: 2018/01/18

SYMBOLS

= 0
= 0
= 0
= 0
= 0
= 0
= 0
= 0
= 0

THIS DRAWING CONTAINS INFORMATION THAT IS PROPRIETARY TO MOLEX ELECTRONIC TECHNOLOGIES, LLC AND SHOULD NOT BE USED WITHOUT WRITTEN PERMISSION

| DIMENSION UNITS | SCALE |
|---|---|
| MM/IN | 1:1 |

GENERAL TOLERANCES (UNLESS SPECIFIED)

| | MM | INCH |
|---|---|---|
| 4 PLACES | ± | ± |
| 3 PLACES | ± | ± 0.01 |
| 2 PLACES | ± 0.25 | ± |
| 1 PLACE | ± 0.38 | ± |
| 0 PLACES | ± | ± |
| ANGULAR TOL | ± 0.5 ° | |

DRAFT WHERE APPLICABLE MUST REMAIN WITHIN DIMENSIONS

CURRENT REV DESC: GOLD LENGTH SPEC CHANGED AS MIN 2.54- MAX 5.54 FOR A-42375-0037/0071

EC NO: 689596
DRWN: SHRUTJ 2021/09/14
CHK'D: SHRUTJ 2021/12/20
APPR: ISHWARG 2021/12/20

INITIAL REVISION:
DRWN: SCHAFER 2003/02/11
APPR: MARGULIS 2004/02/27

THIRD ANGLE PROJECTION | DRAWING: B-SIZE | SERIES: 42375

molex

KK 100 HEADER ASSY
FLAT VERTICAL BREAKAWAY

PRODUCT CUSTOMER DRAWING

| DOCUMENT NUMBER | DOC TYPE | DOC PART | REVISION |
|---|---|---|---|
| SD-42375-001 | PSD | 001 | V |

| MATERIAL NUMBER | CUSTOMER | SHEET NUMBER |
|---|---|---|
| SEE CHART | GENERAL MARKET | 9 OF 35 |

| ENG. NO: A-42375-0562/0596 | | | | | |
|---|---|---|---|---|---|
| HEADER NUMBER: | | | 42312-0036 | | |
| PIN NUMBER: | | | 42663-ARB208 | | |
| PIN LENGTH: L | | | .520 / 13.21 | | |
| MATING LENGTH: M | | | .295 / 7.49 | | |
| GOLD POINT: G | | | 140 / 3.56 | | |
| PC TAIL LENGTH: P | | | .135 / 3.43 | | |
| TIN: T | | | .135 / 3.43 | | |
| CKTS: | | | 2-36 | | |
| KINKS: | | | SMES-42003 | | |
| VOIDED CKTS: | | | NONE | | |
| PACKAGING: | | | BULK PK-40873-0041 | | |
| CKTS | MATERIAL NUMBER | ENG NUMBER | CKTS | MATERIAL NUMBER | ENG NUMBER |
| 2 | 22-28-5025 | A-42375-0562 | 20 | 22-28-5205 | A-42375-0580 |
| 3 | 22-28-5035 | A-42375-0563 | 21 | 22-28-5215 | A-42375-0581 |
| 4 | 22-28-5045 | A-42375-0564 | 22 | 22-28-5225 | A-42375-0582 |
| 5 | 22-28-5055 | A-42375-0565 | 23 | 22-28-5235 | A-42375-0583 |
| 6 | 22-28-5065 | A-42375-0566 | 24 | 22-28-5245 | A-42375-0584 |
| 7 | 22-28-5075 | A-42375-0567 | 25 | 22-28-5255 | A-42375-0585 |
| 8 | 22-28-5085 | A-42375-0568 | 26 | 22-28-5265 | A-42375-0586 |
| 9 | 22-28-5095 | A-42375-0569 | 27 | 22-28-5275 | A-42375-0587 |
| 10 | 22-28-5105 | A-42375-0570 | 28 | 22-28-5285 | A-42375-0588 |
| 11 | 22-28-5115 | A-42375-0571 | 29 | 22-28-5295 | A-42375-0589 |
| 12 | 22-28-5125 | A-42375-0572 | 30 | 22-28-5305 | A-42375-0590 |
| 13 | 22-28-5135 | A-42375-0573 | 31 | 22-28-5315 | A-42375-0591 |
| 14 | 22-28-5145 | A-42375-0574 | 32 | 22-28-5325 | A-42375-0592 |
| 15 | 22-28-5155 | A-42375-0575 | 33 | 22-28-5335 | A-42375-0593 |
| 16 | 22-28-5165 | A-42375-0576 | 34 | 22-28-5345 | A-42375-0594 |
| 17 | 22-28-5175 | A-42375-0577 | 35 | 22-28-5355 | A-42375-0595 |
| 18 | 22-28-5185 | A-42375-0578 | 36 | 22-28-5365 | A-42375-0596 |
| 19 | 22-28-5195 | A-42375-0579 | | | |

| ENG. NO: A-42375-0597/0631 | | | | | |
|---|---|---|---|---|---|
| HEADER NUMBER: | | | 42312-0036 | | |
| PIN NUMBER: | | | 42663-ARB208 | | |
| PIN LENGTH: L | | | .520 / 13.21 | | |
| MATING LENGTH: M | | | .295 / 7.49 | | |
| GOLD POINT: G | | | 140 / 3.56 | | |
| PC TAIL LENGTH: P | | | .135 / 3.43 | | |
| TIN: T | | | .135 / 3.43 | | |
| CKTS: | | | 2-36 | | |
| KINKS: | | | SMES-42003 | | |
| VOIDED CKTS: | | | NONE | | |
| PACKAGING: | | | BULK PK-40873-0041 | | |
| CKTS | MATERIAL NUMBER | ENG NUMBER | CKTS | MATERIAL NUMBER | ENG NUMBER |
| 2 | 22-28-5028 | A-42375-0597 | 20 | 22-28-5208 | A-42375-0615 |
| 3 | 22-28-5038 | A-42375-0598 | 21 | 22-28-5218 | A-42375-0616 |
| 4 | 22-28-5048 | A-42375-0599 | 22 | 22-28-5228 | A-42375-0617 |
| 5 | 22-28-5058 | A-42375-0600 | 23 | 22-28-5238 | A-42375-0618 |
| 6 | 22-28-5068 | A-42375-0601 | 24 | 22-28-5248 | A-42375-0619 |
| 7 | 22-28-5078 | A-42375-0602 | 25 | 22-28-5258 | A-42375-0620 |
| 8 | 22-28-5088 | A-42375-0603 | 26 | 22-28-5268 | A-42375-0621 |
| 9 | 22-28-5098 | A-42375-0604 | 27 | 22-28-5278 | A-42375-0622 |
| 10 | 22-28-5108 | A-42375-0605 | 28 | 22-28-5288 | A-42375-0623 |
| 11 | 22-28-5118 | A-42375-0606 | 29 | 22-28-5298 | A-42375-0624 |
| 12 | 22-28-5128 | A-42375-0607 | 30 | 22-28-5308 | A-42375-0625 |
| 13 | 22-28-5138 | A-42375-0608 | 31 | 22-28-5318 | A-42375-0626 |
| 14 | 22-28-5148 | A-42375-0609 | 32 | 22-28-5328 | A-42375-0627 |
| 15 | 22-28-5158 | A-42375-0610 | 33 | 22-28-5338 | A-42375-0628 |
| 16 | 22-28-5168 | A-42375-0611 | 34 | 22-28-5348 | A-42375-0629 |
| 17 | 22-28-5178 | A-42375-0612 | 35 | 22-28-5358 | A-42375-0630 |
| 18 | 22-28-5188 | A-42375-0613 | 36 | 22-28-5368 | A-42375-0631 |
| 19 | 22-28-5198 | A-42375-0614 | | | |

SYMBOLS

E = 0
E = 0
E = 0
E = 0
▼ = 0
E = 0
☒ = 0
■ = 0
▽ = 0

THIS DRAWING CONTAINS INFORMATION THAT IS PROPRIETARY TO MOLEX ELECTRONIC TECHNOLOGIES, LLC AND SHOULD NOT BE USED WITHOUT WRITTEN PERMISSION

| DIMENSION UNITS | SCALE |
|---|---|
| MM/IN | 1:1 |

GENERAL TOLERANCES (UNLESS SPECIFIED)

| | MM | INCH |
|---|---|---|
| 4 PLACES | ± | ± |
| 3 PLACES | ± | ± 0.01 |
| 2 PLACES | ± 0.25 | ± |
| 1 PLACE | ± 0.38 | ± |
| 0 PLACES | ± | ± |
| ANGULAR TOL | ± 0.5 ° | |

DRAFT WHERE APPLICABLE MUST REMAIN WITHIN DIMENSIONS

CURRENT REV DESC: GOLD LENGTH SPEC CHANGED AS MIN 2.54- MAX 5.54 FOR A-42375-0037/0071

EC NO: 689596
DRWN: SHRUTJ 2021/09/14
CHK'D: SHRUTJ 2021/12/20
APPR: ISHWARG 2021/12/20

INITIAL REVISION:
DRWN: SCHAFER 2003/02/11
APPR: MARGULIS 2004/02/27

THIRD ANGLE PROJECTION | DRAWING: B-SIZE | SERIES: 42375

molex

KK 100 HEADER ASSY
FLAT VERTICAL BREAKAWAY

PRODUCT CUSTOMER DRAWING

| DOCUMENT NUMBER | DOC TYPE | DOC PART | REVISION |
|---|---|---|---|
| SD-42375-001 | PSD | 001 | V |

| MATERIAL NUMBER | CUSTOMER | SHEET NUMBER |
|---|---|---|
| SEE CHART | GENERAL MARKET | 10 OF 35 |

| DOCUMENT STATUS | P1 | RELEASE DATE | 2021/12/20 12:18:33 |
|---|---|---|---|

FORMAT: Eng-lega-master-tb-prod-B
REVISION: D
DATE: 2018/01/18

| ENG. NO: A-42375-0667/0699 | | | | | |
|---|---|---|---|---|---|
| HEADER NUMBER: | | | 42312-0036 | | |
| PIN NUMBER: | | | 42663-ABB208 | | |
| PIN LENGTH: L | | | .455 / 11.56 | | |
| MATING LENGTH: M | | | .240 / 6.09 | | |
| GOLD POINT: G | | | .100 / 2.54 | | |
| PC TAIL LENGTH: P | | | .125 / 3.18 | | |
| TIN: T | | | .100 / 2.54 | | |
| CKTS: | | | 4-36 | | |
| KINKS: | | | NO | | |
| VOIDED CKTS: | | | 4 | | |
| PACKAGING: | | | BULK PK-40873-0041 | | |
| CKTS | MATERIAL NUMBER | ENG NUMBER | CKTS | MATERIAL NUMBER | ENG NUMBER |
| 2 | | | 20 | 42375-0683 | A-42375-0683 |
| 3 | | | 21 | 42375-0684 | A-42375-0684 |
| 4 | 42375-0667 | A-42375-0667 | 22 | 42375-0685 | A-42375-0685 |
| 5 | 42375-0668 | A-42375-0668 | 23 | 42375-0686 | A-42375-0686 |
| 6 | 22-30-3060 | A-42375-0669 | 24 | 42375-0687 | A-42375-0687 |
| 7 | 42375-0670 | A-42375-0670 | 25 | 42375-0688 | A-42375-0688 |
| 8 | 42375-0671 | A-42375-0671 | 26 | 42375-0689 | A-42375-0689 |
| 9 | 42375-0672 | A-42375-0672 | 27 | 42375-0690 | A-42375-0690 |
| 10 | 42375-0673 | A-42375-0673 | 28 | 42375-0691 | A-42375-0691 |
| 11 | 42375-0674 | A-42375-0674 | 29 | 42375-0692 | A-42375-0692 |
| 12 | 22-30-3120 | A-42375-0675 | 30 | 42375-0693 | A-42375-0693 |
| 13 | 42375-0676 | A-42375-0676 | 31 | 42375-0694 | A-42375-0694 |
| 14 | 42375-0677 | A-42375-0677 | 32 | 42375-0695 | A-42375-0695 |
| 15 | 42375-0678 | A-42375-0678 | 33 | 42375-0696 | A-42375-0696 |
| 16 | 42375-0679 | A-42375-0679 | 34 | 42375-0697 | A-42375-0697 |
| 17 | 42375-0680 | A-42375-0680 | 35 | 42375-0698 | A-42375-0698 |
| 18 | 42375-0681 | A-42375-0681 | 36 | 42375-0699 | A-42375-0699 |
| 19 | 42375-0682 | A-42375-0682 | | | |

| ENG. NO: A-42375-0700/0732 | | | | | |
|---|---|---|---|---|---|
| HEADER NUMBER: | | | 42312-0036 | | |
| PIN NUMBER: | | | 42663-ADB208 | | |
| PIN LENGTH: L | | | .465 /11.81 | | |
| MATING LENGTH: M | | | .240 / 6.09 | | |
| GOLD POINT: G | | | .100 / 2.54 | | |
| PC TAIL LENGTH: P | | | .135 / 3.43 | | |
| TIN: T | | | .100 / 2.54 | | |
| CKTS: | | | 4-36 | | |
| KINKS: | | | SMES-42003 | | |
| VOIDED CKTS: | | | 4 | | |
| PACKAGING: | | | BULK PK-40873-0041 | | |
| CKTS | MATERIAL NUMBER | ENG NUMBER | CKTS | MATERIAL NUMBER | ENG NUMBER |
| 2 | | | 20 | 42375-0716 | A-42375-0716 |
| 3 | | | 21 | 42375-0717 | A-42375-0717 |
| 4 | 42375-0700 | A-42375-0700 | 22 | 42375-0718 | A-42375-0718 |
| 5 | 42375-0701 | A-42375-0701 | 23 | 42375-0719 | A-42375-0719 |
| 6 | 22-30-3061 | A-42375-0702 | 24 | 42375-0720 | A-42375-0720 |
| 7 | 42375-0703 | A-42375-0703 | 25 | 42375-0721 | A-42375-0721 |
| 8 | 42375-0704 | A-42375-0704 | 26 | 42375-0722 | A-42375-0722 |
| 9 | 42375-0705 | A-42375-0705 | 27 | 42375-0723 | A-42375-0723 |
| 10 | 42375-0706 | A-42375-0706 | 28 | 42375-0724 | A-42375-0724 |
| 11 | 42375-0707 | A-42375-0707 | 29 | 42375-0725 | A-42375-0725 |
| 12 | 42375-0708 | A-42375-0708 | 30 | 42375-0726 | A-42375-0726 |
| 13 | 42375-0709 | A-42375-0709 | 31 | 42375-0727 | A-42375-0727 |
| 14 | 42375-0710 | A-42375-0710 | 32 | 42375-0728 | A-42375-0728 |
| 15 | 42375-0711 | A-42375-0711 | 33 | 42375-0729 | A-42375-0729 |
| 16 | 42375-0712 | A-42375-0712 | 34 | 42375-0730 | A-42375-0730 |
| 17 | 42375-0713 | A-42375-0713 | 35 | 42375-0731 | A-42375-0731 |
| 18 | 42375-0714 | A-42375-0714 | 36 | 42375-0732 | A-42375-0732 |
| 19 | 42375-0715 | A-42375-0715 | | | |

| DOCUMENT STATUS | P1 | RELEASE DATE | 2021/12/20 12:18:33 |
|---|---|---|---|

SYMBOLS
E/A = 0
E/C = 0
E/P = 0
S = 0
▼ = 0
C = 0
☒ = 0
■ = 0
▽ = 0

THIS DRAWING CONTAINS INFORMATION THAT IS PROPRIETARY TO MOLEX ELECTRONIC TECHNOLOGIES, LLC AND SHOULD NOT BE USED WITHOUT WRITTEN PERMISSION

DIMENSION UNITS: MM/IN
SCALE: 1:1

GENERAL TOLERANCES (UNLESS SPECIFIED)

| | MM | INCH |
|---|---|---|
| 4 PLACES | ± | ± |
| 3 PLACES | ± | ± 0.01 |
| 2 PLACES | ± 0.25 | ± |
| 1 PLACE | ± 0.38 | ± |
| 0 PLACES | ± | ± |
| ANGULAR TOL | ± 0.5 ° | |

DRAFT WHERE APPLICABLE MUST REMAIN WITHIN DIMENSIONS

CURRENT REV DESC: GOLD LENGTH SPEC CHANGED AS MIN 2.54- MAX 5.54 FOR A-42375-0037/0071

EC NO: 689596
DRWN: SHRUTJ 2021/09/14
CHK'D: SHRUTJ 2021/12/20
APPR: ISHWARG 2021/12/20

INITIAL REVISION:
DRWN: SCHAFER 2003/02/11
APPR: MARGULIS 2004/02/27

THIRD ANGLE PROJECTION
DRAWING: B-SIZE
SERIES: 42375

molex

KK 100 HEADER ASSY
FLAT VERTICAL BREAKAWAY

PRODUCT CUSTOMER DRAWING

| DOCUMENT NUMBER | DOC TYPE | DOC PART | REVISION |
|---|---|---|---|
| SD-42375-001 | PSD | 001 | V |

| MATERIAL NUMBER | CUSTOMER | SHEET NUMBER |
|---|---|---|
| SEE CHART | GENERAL MARKET | 11 OF 35 |

FORMAT: Eng-lega-master-tb-prod-B
REVISION: D
DATE: 2018/01/18

| ENG. NO: A-42375-0836/0870 | | | | | |
|---|---|---|---|---|---|
| HEADER NUMBER: | | | 42312-0036 | | |
| PIN NUMBER: | | | 42663-BSA154 | | |
| PIN LENGTH: L | | | .630 / 16.00 | | |
| MATING LENGTH: M | | | .405/10.29 | | |
| GOLD POINT: G | | | N/A | | |
| PC TAIL LENGTH: P | | | .135 / 3.43 | | |
| TIN: T | | | OVERALL | | |
| CKTS: | | | 2-36 | | |
| KINKS: | | | SMES-42003 | | |
| VOIDED CKTS: | | | NONE | | |
| PACKAGING: | | | BULK PK-40873-0041 | | |
| CKTS | MATERIAL NUMBER | ENG NUMBER | CKTS | MATERIAL NUMBER | ENG NUMBER |
| 2 | | A-42375-0836 | 20 | 22-30-3203 | A-42375-0854 |
| 3 | 22-28-3033 | A-42375-0837 | 21 | 22-30-3213 | A-42375-0855 |
| 4 | 22-28-3043 | A-42375-0838 | 22 | 22-30-3223 | A-42375-0856 |
| 5 | 22-28-3053 | A-42375-0839 | 23 | 22-30-3233 | A-42375-0857 |
| 6 | 22-28-3063 | A-42375-0840 | 24 | 22-30-3243 | A-42375-0858 |
| 7 | 22-28-3073 | A-42375-0841 | 25 | 22-30-3253 | A-42375-0859 |
| 8 | 22-28-3083 | A-42375-0842 | 26 | 22-30-3263 | A-42375-0860 |
| 9 | 22-28-3093 | A-42375-0843 | 27 | 22-30-3273 | A-42375-0861 |
| 10 | 22-30-3103 | A-42375-0844 | 28 | 22-30-3283 | A-42375-0862 |
| 11 | 22-30-3113 | A-42375-0845 | 29 | 22-30-3293 | A-42375-0863 |
| 12 | 22-30-3123 | A-42375-0846 | 30 | 22-30-3303 | A-42375-0864 |
| 13 | 22-30-3133 | A-42375-0847 | 31 | 22-30-3313 | A-42375-0865 |
| 14 | 22-30-3143 | A-42375-0848 | 32 | 22-30-3323 | A-42375-0866 |
| 15 | 22-30-3153 | A-42375-0849 | 33 | 22-30-3333 | A-42375-0867 |
| 16 | 22-30-3163 | A-42375-0850 | 34 | 22-30-3343 | A-42375-0868 |
| 17 | 22-30-3173 | A-42375-0851 | 35 | 22-30-3353 | A-42375-0869 |
| 18 | 22-30-3183 | A-42375-0852 | 36 | 22-30-3363 | A-42375-0870 |
| 19 | 22-30-3193 | A-42375-0853 | | | |
| | | | | | |

SYMBOLS

= 0
= 0
= 0
= 0
= 0
= 0
= 0
= 0
= 0

THIS DRAWING CONTAINS INFORMATION THAT IS PROPRIETARY TO MOLEX ELECTRONIC TECHNOLOGIES, LLC AND SHOULD NOT BE USED WITHOUT WRITTEN PERMISSION

DIMENSION UNITS: MM/IN
SCALE: 1:1

GENERAL TOLERANCES (UNLESS SPECIFIED)

| | MM | INCH |
|---|---|---|
| 4 PLACES | ± | ± |
| 3 PLACES | ± | ± 0.01 |
| 2 PLACES | ± 0.25 | ± |
| 1 PLACE | ± 0.38 | ± |
| 0 PLACES | ± | ± |
| ANGULAR TOL | ± 0.5 ° | |

DRAFT WHERE APPLICABLE MUST REMAIN WITHIN DIMENSIONS

CURRENT REV DESC: GOLD LENGTH SPEC CHANGED AS MIN 2.54- MAX 5.54 FOR A-42375-0037/0071

EC NO: 689596
DRWN: SHRUTJ 2021/09/14
CHK'D: SHRUTJ 2021/12/20
APPR: ISHWARG 2021/12/20

INITIAL REVISION:
DRWN: SCHAFER 2003/02/11
APPR: MARGULIS 2004/02/27

THIRD ANGLE PROJECTION | DRAWING: B-SIZE | SERIES: 42375

molex

KK 100 HEADER ASSY
FLAT VERTICAL BREAKAWAY

PRODUCT CUSTOMER DRAWING

| DOCUMENT NUMBER | DOC TYPE | DOC PART | REVISION |
|---|---|---|---|
| SD-42375-001 | PSD | 001 | V |

| MATERIAL NUMBER | CUSTOMER | SHEET NUMBER |
|---|---|---|
| SEE CHART | GENERAL MARKET | 12 OF 35 |

| DOCUMENT STATUS | P1 | RELEASE DATE | 2021/12/20 12:18:33 |
|---|---|---|---|

FORMAT: Eng-lega-master-tb-prod-B
REVISION: D
DATE: 2018/01/18

| ENG. NO: A-42375-0871/0904 | |
|---|---|
| HEADER NUMBER: | 42312-0036 |
| PIN NUMBER: | 42663-ATA154 |
| PIN LENGTH: L | .530 / 13.46 |
| MATING LENGTH: M | .320 / 8.13 |
| GOLD POINT: G | N/A |
| PC TAIL LENGTH: P | .120 / 3.05 |
| TIN: T | OVERALL |
| CKTS: | 3-36 |
| KINKS: | NO |
| VOIDED CKTS: | 2 |
| PACKAGING: | BULK PK-40873-0041 |

| CKTS | MATERIAL NUMBER | ENG NUMBER | CKTS | MATERIAL NUMBER | ENG NUMBER |
|---|---|---|---|---|---|
| 2 | | | 20 | 22-30-3204 | A-42375-0888 |
| 3 | 22-28-3034 | A-42375-0871 | 21 | 22-30-3214 | A-42375-0889 |
| 4 | 22-28-3044 | A-42375-0872 | 22 | 22-30-3224 | A-42375-0890 |
| 5 | 22-28-3054 | A-42375-0873 | 23 | 22-30-3234 | A-42375-0891 |
| 6 | 22-28-3064 | A-42375-08474 | 24 | 22-30-3244 | A-42375-0892 |
| 7 | 22-28-3074 | A-42375-0875 | 25 | 22-30-3254 | A-42375-0893 |
| 8 | 22-28-3084 | A-42375-0876 | 26 | 22-30-3264 | A-42375-0894 |
| 9 | 22-28-3094 | A-42375-0877 | 27 | 22-30-3274 | A-42375-0895 |
| 10 | 22-30-3104 | A-42375-0878 | 28 | 22-30-3284 | A-42375-0896 |
| 11 | 22-30-3114 | A-42375-0879 | 29 | 22-30-3294 | A-42375-0897 |
| 12 | 22-30-3124 | A-42375-0880 | 30 | 22-30-3304 | A-42375-0898 |
| 13 | 22-30-3134 | A-42375-0881 | 31 | 22-30-3314 | A-42375-0899 |
| 14 | 22-30-3144 | A-42375-0882 | 32 | 22-30-3324 | A-42375-0900 |
| 15 | 22-30-3154 | A-42375-0883 | 33 | 22-30-3334 | A-42375-0901 |
| 16 | 22-30-3164 | A-42375-0884 | 34 | 22-30-3344 | A-42375-0902 |
| 17 | 22-30-3174 | A-42375-0885 | 35 | 22-30-3354 | A-42375-0903 |
| 18 | 22-30-3184 | A-42375-0886 | 36 | 22-30-3364 | A-42375-0904 |
| 19 | 22-30-3194 | A-42375-0887 | | | |
| | | | | | |

| ENG. NO: A-42375-0973/1001 | |
|---|---|
| HEADER NUMBER: | 42312-0036 |
| PIN NUMBER: | 42663-ABA154 |
| PIN LENGTH: L | .455 / 11.56 |
| MATING LENGTH: M | .240 / 6.09 |
| GOLD POINT: G | N/A |
| PC TAIL LENGTH: P | .125 / 3.18 |
| TIN: T | OVERALL |
| CKTS: | 8-36 |
| KINKS: | NO |
| VOIDED CKTS: | 3,8 |
| PACKAGING: | BULK PK-40873-0041 |

| CKTS | MATERIAL NUMBER | ENG NUMBER | CKTS | MATERIAL NUMBER | ENG NUMBER |
|---|---|---|---|---|---|
| 2 | | | 20 | 42375-0985 | A-42375-0985 |
| 3 | | | 21 | 42375-0986 | A-42375-0986 |
| 4 | | | 22 | 42375-0987 | A-42375-0987 |
| 5 | | | 23 | 42375-0988 | A-42375-0988 |
| 6 | | | 24 | 42375-0989 | A-42375-0989 |
| 7 | | | 25 | 42375-0990 | A-42375-0990 |
| 8 | 42375-0973 | A-42375-0973 | 26 | 42375-0991 | A-42375-0991 |
| 9 | 42375-0974 | A-42375-0974 | 27 | 42375-0992 | A-42375-0992 |
| 10 | 22-30-3107 | A-42375-0975 | 28 | 42375-0993 | A-42375-0993 |
| 11 | 42375-0976 | A-42375-0976 | 29 | 42375-0994 | A-42375-0994 |
| 12 | 42375-0977 | A-42375-0977 | 30 | 42375-0995 | A-42375-0995 |
| 13 | 42375-0978 | A-42375-0978 | 31 | 42375-0996 | A-42375-0996 |
| 14 | 42375-0979 | A-42375-0979 | 32 | 42375-0997 | A-42375-0997 |
| 15 | 42375-0980 | A-42375-0980 | 33 | 42375-0998 | A-42375-0998 |
| 16 | 42375-0981 | A-42375-0981 | 34 | 42375-0999 | A-42375-0999 |
| 17 | 42375-0982 | A-42375-0982 | 35 | 42375-1000 | A-42375-1000 |
| 18 | 42375-0983 | A-42375-0983 | 36 | 42375-1001 | A-42375-1001 |
| 19 | 42375-0984 | A-42375-0984 | | | |

SYMBOLS

= 0

THIS DRAWING CONTAINS INFORMATION THAT IS PROPRIETARY TO MOLEX ELECTRONIC TECHNOLOGIES, LLC AND SHOULD NOT BE USED WITHOUT WRITTEN PERMISSION

DIMENSION UNITS: MM/IN
SCALE: 1:1

GENERAL TOLERANCES (UNLESS SPECIFIED)

| | MM | INCH |
|---|---|---|
| 4 PLACES | ± | ± |
| 3 PLACES | ± | ± 0.01 |
| 2 PLACES | ± 0.25 | ± |
| 1 PLACE | ± 0.38 | ± |
| 0 PLACES | ± | ± |
| ANGULAR TOL | ± 0.5 ° | |

DRAFT WHERE APPLICABLE MUST REMAIN WITHIN DIMENSIONS

CURRENT REV DESC: GOLD LENGTH SPEC CHANGED AS MIN 2.54- MAX 5.54 FOR A-42375-0037/0071

EC NO: 689596
DRWN: SHRUTJ 2021/09/14
CHK'D: SHRUTJ 2021/12/20
APPR: ISHWARG 2021/12/20

INITIAL REVISION:
DRWN: SCHAFER 2003/02/11
APPR: MARGULIS 2004/02/27

THIRD ANGLE PROJECTION | DRAWING: B-SIZE | SERIES: 42375

molex

KK 100 HEADER ASSY
FLAT VERTICAL BREAKAWAY

PRODUCT CUSTOMER DRAWING

| DOCUMENT NUMBER | DOC TYPE | DOC PART | REVISION |
|---|---|---|---|
| SD-42375-001 | PSD | 001 | V |

| MATERIAL NUMBER | CUSTOMER | SHEET NUMBER |
|---|---|---|
| SEE CHART | GENERAL MARKET | 13 OF 35 |

| DOCUMENT STATUS | P1 | RELEASE DATE | 2021/12/20 12:18:33 |
|---|---|---|---|

FORMAT: Eng-lega-master-tb-prod-B
REVISION: D
DATE: 2018/01/18

| ENG. NO: A-42375-1105/1139 | | | | | |
|---|---|---|---|---|---|
| HEADER NUMBER: | | | 42312-0036 | | |
| PIN NUMBER: | | | 42663-ABB208 | | |
| PIN LENGTH: L | | | .455 / 11.56 | | |
| MATING LENGTH: M | | | .240 / 6.09 | | |
| GOLD POINT: G | | | .100 / 2.54 | | |
| PC TAIL LENGTH: P | | | .125 / 3.18 | | |
| TIN: T | | | .100 / 2.54 | | |
| CKTS: | | | 2-36 | | |
| KINKS: | | | NO | | |
| VOIDED CKTS: | | | 4 | | |
| PACKAGING: | | | BULK PK-40873-0041 | | |
| CKTS | MATERIAL NUMBER | ENG NUMBER | CKTS | MATERIAL NUMBER | ENG NUMBER |
| 2 | 42375-1105 | A-42375-1105 | 20 | 42375-1123 | A-42375-1123 |
| 3 | 42375-1106 | A-42375-1106 | 21 | 42375-1124 | A-42375-1124 |
| 4 | 42375-1107 | A-42375-1107 | 22 | 42375-1125 | A-42375-1125 |
| 5 | 42375-1108 | A-42375-1108 | 23 | 42375-1126 | A-42375-1126 |
| 6 | 42375-1109 | A-42375-1109 | 24 | 42375-1127 | A-42375-1127 |
| 7 | 42375-1110 | A-42375-1110 | 25 | 42375-1128 | A-42375-1128 |
| 8 | 42375-1111 | A-42375-1111 | 26 | 42375-1129 | A-42375-1129 |
| 9 | 42375-1112 | A-42375-1112 | 27 | 42375-1130 | A-42375-1130 |
| 10 | 42375-1113 | A-42375-1113 | 28 | 42375-1131 | A-42375-1131 |
| 11 | 42375-1114 | A-42375-1114 | 29 | 42375-1132 | A-42375-1132 |
| 12 | 42375-1115 | A-42375-1115 | 30 | 42375-1133 | A-42375-1133 |
| 13 | 42375-1116 | A-42375-1116 | 31 | 42375-1134 | A-42375-1134 |
| 14 | 42375-1117 | A-42375-1117 | 32 | 42375-1135 | A-42375-1135 |
| 15 | 42375-1118 | A-42375-1118 | 33 | 42375-1136 | A-42375-1136 |
| 16 | 42375-1119 | A-42375-1119 | 34 | 42375-1137 | A-42375-1137 |
| 17 | 42375-1120 | A-42375-1120 | 35 | 42375-1138 | A-42375-1138 |
| 18 | 42375-1121 | A-42375-1121 | 36 | 42375-1139 | A-42375-1139 |
| 19 | 42375-1122 | A-42375-1122 | | | |

| ENG. NO: 42375-1244/1278 | | | |
|---|---|---|---|
| HEADER NUMBER: | 42312-0036 | | |
| PIN NUMBER: | 42663-ABA154 | | |
| PIN LENGTH: L | .455 / 11.56 | | |
| MATING LENGTH: M | .240 / 6.09 | | |
| GOLD POINT: G | N/A | | |
| PC TAIL LENGTH: P | .125 / 3.18 | | |
| TIN: T | OVERALL | | |
| CKTS: | 2-36 | | |
| KINKS: | NO | | |
| VOIDED CKTS: | 2 | | |
| PACKAGING: | BULK PK-40873-0041 | | |
| CKTS | ITEM NUMBER | CKTS | MATERIAL NUMBER |
| 2 | 42375-1244 | 20 | 42375-1262 |
| 3 | 42375-1245 | 21 | 42375-1263 |
| 4 | 42375-1246 | 22 | 42375-1264 |
| 5 | 42375-1247 | 23 | 42375-1265 |
| 6 | 42375-1248 | 24 | 42375-1266 |
| 7 | 42375-1249 | 25 | 42375-1267 |
| 8 | 42375-1250 | 26 | 42375-1268 |
| 9 | 42375-1251 | 27 | 42375-1269 |
| 10 | 42375-1252 | 28 | 42375-1270 |
| 11 | 42375-1253 | 29 | 42375-1271 |
| 12 | 42375-1254 | 30 | 42375-1272 |
| 13 | 42375-1255 | 31 | 42375-1273 |
| 14 | 42375-125 6 | 32 | 42375-1274 |
| 15 | 42375-1257 | 33 | 42375-1275 |
| 16 | 42375-1258 | 34 | 42375-1276 |
| 17 | 42375-1259 | 35 | 42375-1277 |
| 18 | 42375-1260 | 36 | 42375-1278 |
| 19 | 42375-1261 | | |

| DOCUMENT STATUS | P1 | RELEASE DATE | 2021/12/20 12:18:33 |
|---|---|---|---|

SYMBOLS: F = 0, E = 0, D = 0, C = 0, ▼ = 0, B = 0, ☒ = 0, ■ = 0, A = 0

THIS DRAWING CONTAINS INFORMATION THAT IS PROPRIETARY TO MOLEX ELECTRONIC TECHNOLOGIES, LLC AND SHOULD NOT BE USED WITHOUT WRITTEN PERMISSION

DIMENSION UNITS: MM/IN — SCALE: 1:1

GENERAL TOLERANCES (UNLESS SPECIFIED)

| | MM | INCH |
|---|---|---|
| 4 PLACES | ± | ± |
| 3 PLACES | ± | ± 0.01 |
| 2 PLACES | ± 0.25 | ± |
| 1 PLACE | ± 0.38 | ± |
| 0 PLACES | ± | ± |
| ANGULAR TOL | ± 0.5 ° | |

DRAFT WHERE APPLICABLE MUST REMAIN WITHIN DIMENSIONS

CURRENT REV DESC: GOLD LENGTH SPEC CHANGED AS MIN 2.54- MAX 5.54 FOR A-42375-0037/0071

EC NO: 689596
DRWN: SHRUTJ 2021/09/14
CHK'D: SHRUTJ 2021/12/20
APPR: ISHWARG 2021/12/20

INITIAL REVISION:
DRWN: SCHAFER 2003/02/11
APPR: MARGULIS 2004/02/27

THIRD ANGLE PROJECTION — DRAWING: B-SIZE — SERIES: 42375

molex

KK 100 HEADER ASSY
FLAT VERTICAL BREAKAWAY

PRODUCT CUSTOMER DRAWING

| DOCUMENT NUMBER | DOC TYPE | DOC PART | REVISION |
|---|---|---|---|
| SD-42375-001 | PSD | 001 | V |

| MATERIAL NUMBER | CUSTOMER | SHEET NUMBER |
|---|---|---|
| SEE CHART | GENERAL MARKET | 14 OF 35 |

FORMAT: Eng-lega-master-tb-prod-B
REVISION: D
DATE: 2018/01/18

| ENG. NO: 42375-1349/1382 | | | |
|---|---|---|---|
| HEADER NUMBER: | | 42312-0036 | |
| PIN NUMBER: | | 42663-ABA154 | |
| PIN LENGTH: L | | .455 / 11.56 | |
| MATING LENGTH: M | | .230 / 5.84 | |
| GOLD POINT: G | | N/A | |
| PC TAIL LENGTH: P | | .135 / 3.43 | |
| TIN: T | | OVERALL | |
| CKTS: | | 3-36 | |
| KINKS: | | SMES-42003 | |
| VOIDED CKTS: | | 2 | |
| PACKAGING: | | BULK PK-40873-0041 | |
| CKTS | ITEM NUMBER | CKTS | ITEM NUMBER |
| 2 | | 20 | 42375-1366 |
| 3 | 42375-1349 | 21 | 42375-1367 |
| 4 | 42375-1350 | 22 | 42375-1368 |
| 5 | 42375-1351 | 23 | 42375-1369 |
| 6 | 42375-1352 | 24 | 42375-1370 |
| 7 | 42375-1353 | 25 | 42375-1371 |
| 8 | 42375-1354 | 26 | 42375-1372 |
| 9 | 42375-1355 | 27 | 42375-1373 |
| 10 | 42375-1356 | 28 | 42375-1374 |
| 11 | 42375-1357 | 29 | 42375-1375 |
| 12 | 42375-1358 | 30 | 42375-1376 |
| 13 | 42375-1359 | 31 | 42375-1377 |
| 14 | 42375-1360 | 32 | 42375-1378 |
| 15 | 42375-1361 | 33 | 42375-1379 |
| 16 | 42375-1362 | 34 | 42375-1380 |
| 17 | 42375-1363 | 35 | 42375-1381 |
| 18 | 42375-1364 | 36 | 42375-1382 |
| 19 | 42375-1365 | | |

| ENG. NO: 42375-1515/1548 | | | |
|---|---|---|---|
| HEADER NUMBER: | | 42312-0036 | |
| PIN NUMBER: | | 42663-ABB208 | |
| PIN LENGTH: L | | .455 / 11.56 | |
| MATING LENGTH: M | | .230 / 5.84 | |
| GOLD POINT: G | | .140 / 3.56 | |
| PC TAIL LENGTH: P | | .135 / 3.43 | |
| TIN: T | | .100 / 2.54 | |
| CKTS: | | 3-36 | |
| KINKS: | | SMES-42003 | |
| VOIDED CKTS: | | 2 | |
| PACKAGING: | | BULK PK-40873-0041 | |
| CKTS | ITEM NUMBER | CKTS | ITEM NUMBER |
| 2 | | 20 | 42375-1532 |
| 3 | 42375-1515 | 21 | 42375-1533 |
| 4 | 42375-1516 | 22 | 42375-1534 |
| 5 | 42375-1517 | 23 | 42375-1535 |
| 6 | 42375-1518 | 24 | 42375-1536 |
| 7 | 42375-1519 | 25 | 42375-1537 |
| 8 | 42375-1520 | 26 | 42375-1538 |
| 9 | 42375-1521 | 27 | 42375-1539 |
| 10 | 42375-1522 | 28 | 42375-1540 |
| 11 | 42375-1523 | 29 | 42375-1541 |
| 12 | 42375-1524 | 30 | 42375-1542 |
| 13 | 42375-1525 | 31 | 42375-1543 |
| 14 | 42375-1526 | 32 | 42375-1544 |
| 15 | 42375-1527 | 33 | 42375-1545 |
| 16 | 42375-1528 | 34 | 42375-1546 |
| 17 | 42375-1529 | 35 | 42375-1547 |
| 18 | 42375-1530 | 36 | 42375-1548 |
| 19 | 42375-1531 | | |

SYMBOLS

= 0
= 0
= 0
= 0
= 0
= 0
= 0
= 0
= 0

THIS DRAWING CONTAINS INFORMATION THAT IS PROPRIETARY TO MOLEX ELECTRONIC TECHNOLOGIES, LLC AND SHOULD NOT BE USED WITHOUT WRITTEN PERMISSION

DIMENSION UNITS: MM/IN
SCALE: 1:1

GENERAL TOLERANCES (UNLESS SPECIFIED)

| | MM | INCH |
|---|---|---|
| 4 PLACES | ± | ± |
| 3 PLACES | ± | ± 0.01 |
| 2 PLACES | ± 0.25 | ± |
| 1 PLACE | ± 0.38 | ± |
| 0 PLACES | ± | ± |
| ANGULAR TOL | ± 0.5 ° | |

DRAFT WHERE APPLICABLE MUST REMAIN WITHIN DIMENSIONS

CURRENT REV DESC: GOLD LENGTH SPEC CHANGED AS MIN 2.54- MAX 5.54 FOR A-42375-0037/0071

EC NO: 689596
DRWN: SHRUTJ 2021/09/14
CHK'D: SHRUTJ 2021/12/20
APPR: ISHWARG 2021/12/20

INITIAL REVISION:
DRWN: SCHAFER 2003/02/11
APPR: MARGULIS 2004/02/27

THIRD ANGLE PROJECTION | DRAWING: B-SIZE | SERIES: 42375

molex

KK 100 HEADER ASSY
FLAT VERTICAL BREAKAWAY

PRODUCT CUSTOMER DRAWING

| DOCUMENT NUMBER | DOC TYPE | DOC PART | REVISION |
|---|---|---|---|
| SD-42375-001 | PSD | 001 | V |

| MATERIAL NUMBER | CUSTOMER | SHEET NUMBER |
|---|---|---|
| SEE CHART | GENERAL MARKET | 15 OF 35 |

| DOCUMENT STATUS | P1 | RELEASE DATE | 2021/12/20 12:18:33 |
|---|---|---|---|

FORMAT: Eng-lega-master-tb-prod-B
REVISION: D
DATE: 2018/01/18

| ENG. NO: 42375-1720/1753 | | | |
|---|---|---|---|
| HEADER NUMBER: | | 42312-0036 | |
| PIN NUMBER: | | 42663-ABB208 | |
| PIN LENGTH: L | | .455 / 11.56 | |
| MATING LENGTH: M | | .240 / 6.09 | |
| GOLD POINT: G | | .140 / 3.56 | |
| PC TAIL LENGTH: P | | .125 / 3.18 | |
| TIN: T | | .100 / 2.54 | |
| CKTS: | | 3-36 | |
| KINKS: | | NO | |
| VOIDED CKTS: | | 3 | |
| PACKAGING: | | BULK | PK-40873-0041 |
| CKTS | ITEM NUMBER | CKTS | ITEM NUMBER |
| 2 | | 20 | 42375-1737 |
| 3 | 42375-1720 | 21 | 42375-1738 |
| 4 | 42375-1721 | 22 | 42375-1739 |
| 5 | 42375-1722 | 23 | 42375-1740 |
| 6 | 42375-1723 | 24 | 42375-1741 |
| 7 | 42375-1724 | 25 | 42375-1742 |
| 8 | 42375-1725 | 26 | 42375-1743 |
| 9 | 42375-1726 | 27 | 42375-1744 |
| 10 | 42375-1727 | 28 | 42375-1745 |
| 11 | 42375-1728 | 29 | 42375-1746 |
| 12 | 42375-1729 | 30 | 42375-1747 |
| 13 | 42375-1730 | 31 | 42375-1748 |
| 14 | 42375-1731 | 32 | 42375-1749 |
| 15 | 42375-1732 | 33 | 42375-1750 |
| 16 | 42375-1733 | 34 | 42375-1751 |
| 17 | 42375-1734 | 35 | 42375-1752 |
| 18 | 42375-1735 | 36 | 42375-1753 |
| 19 | 42375-1736 | | |

| ENG. NO: 42375-1855/1889 | | | |
|---|---|---|---|
| HEADER NUMBER: | | 42312-0036 | |
| PIN NUMBER: | | 42663-CJA154 | |
| PIN LENGTH: L | | .700 / 17.78 | |
| MATING LENGTH: M | | .488 / 12.40 | |
| GOLD POINT: G | | N/A | |
| PC TAIL LENGTH: P | | .122 / 3.10 | |
| TIN: T | | OVERALL | |
| CKTS: | | 2-36 | |
| KINKS: | | NO | |
| VOIDED CKTS: | | NONE | |
| PACKAGING: | | BULK | PK-40873-0041 |
| CKTS | ITEM NUMBER | CKTS | ITEM NUMBER |
| 2 | 42375-1855 | 20 | 42375-1873 |
| 3 | 42375-1856 | 21 | 42375-1874 |
| 4 | 42375-1857 | 22 | 42375-1875 |
| 5 | 42375-1858 | 23 | 42375-1876 |
| 6 | 42375-1859 | 24 | 42375-1877 |
| 7 | 42375-1860 | 25 | 42375-1878 |
| 8 | 42375-1861 | 26 | 42375-1879 |
| 9 | 42375-1862 | 27 | 42375-1880 |
| 10 | 42375-1863 | 28 | 42375-1881 |
| 11 | 42375-1864 | 29 | 42375-1882 |
| 12 | 42375-1865 | 30 | 42375-1883 |
| 13 | 42375-1866 | 31 | 42375-1884 |
| 14 | 42375-1867 | 32 | 42375-1885 |
| 15 | 42375-1868 | 33 | 42375-1886 |
| 16 | 42375-1869 | 34 | 42375-1887 |
| 17 | 42375-1870 | 35 | 42375-1888 |
| 18 | 42375-1871 | 36 | 42375-1889 |
| 19 | 42375-1872 | | |

THIS DRAWING CONTAINS INFORMATION THAT IS PROPRIETARY TO MOLEX ELECTRONIC TECHNOLOGIES, LLC AND SHOULD NOT BE USED WITHOUT WRITTEN PERMISSION

SYMBOLS: E = 0, C = 0, B = 0, S = 0, ▼ = 0, F = 0, ☒ = 0, ■ = 0, ▽ = 0

DIMENSION UNITS: MM/IN
SCALE: 1:1

GENERAL TOLERANCES (UNLESS SPECIFIED)

| | MM | INCH |
|---|---|---|
| 4 PLACES | ± | ± |
| 3 PLACES | ± | ± 0.01 |
| 2 PLACES | ± 0.25 | ± |
| 1 PLACE | ± 0.38 | ± |
| 0 PLACES | ± | ± |
| ANGULAR TOL | ± 0.5 ° | |

DRAFT WHERE APPLICABLE MUST REMAIN WITHIN DIMENSIONS

CURRENT REV DESC: GOLD LENGTH SPEC CHANGED AS MIN 2.54- MAX 5.54 FOR A-42375-0037/0071

EC NO: 689596
DRWN: SHRUTJ 2021/09/14
CHK'D: SHRUTJ 2021/12/20
APPR: ISHWARG 2021/12/20

INITIAL REVISION:
DRWN: SCHAFER 2003/02/11
APPR: MARGULIS 2004/02/27

THIRD ANGLE PROJECTION

DRAWING: B-SIZE
SERIES: 42375

molex

KK 100 HEADER ASSY
FLAT VERTICAL BREAKAWAY

PRODUCT CUSTOMER DRAWING

| DOCUMENT NUMBER | DOC TYPE | DOC PART | REVISION |
|---|---|---|---|
| SD-42375-001 | PSD | 001 | V |

| MATERIAL NUMBER | CUSTOMER | SHEET NUMBER |
|---|---|---|
| SEE CHART | GENERAL MARKET | 16 OF 35 |

| DOCUMENT STATUS | P1 | RELEASE DATE | 2021/12/20 12:18:33 |
|---|---|---|---|

FORMAT: Eng-lega-master-tb-prod-B
REVISION: D
DATE: 2018/01/18

| ENG. NO: 42375-1922/1956 | | | |
|---|---|---|---|
| HEADER NUMBER: | | 42312-0036 | |
| PIN NUMBER: | | 42663-AEA154 | |
| PIN LENGTH: L | | .700 / 17.78 | |
| MATING LENGTH: M | | .190 / 4.83 | |
| GOLD POINT: G | | N/A | |
| PC TAIL LENGTH: P | | .190 / 4.83 | |
| TIN: T | | .200 / 5.08 | |
| CKTS: | | 2-36 | |
| KINKS: | | NO | |
| VOIDED CKTS: | | NONE | |
| PACKAGING: | | BULK PK-40873-0041 | |
| CKTS | ITEM NUMBER | CKTS | ITEM NUMBER |
| 2 | 42375-1922 | 20 | 42375-1873 |
| 3 | 42375-1923 | 21 | 42375-1874 |
| 4 | 42375-1924 | 22 | 42375-1875 |
| 5 | 42375-1925 | 23 | 42375-1876 |
| 6 | 42375-1926 | 24 | 42375-1877 |
| 7 | 42375-1927 | 25 | 42375-1878 |
| 8 | 42375-1928 | 26 | 42375-1879 |
| 9 | 42375-1929 | 27 | 42375-1880 |
| 10 | 42375-1930 | 28 | 42375-1881 |
| 11 | 42375-1931 | 29 | 42375-1882 |
| 12 | 42375-1932 | 30 | 42375-1883 |
| 13 | 42375-1933 | 31 | 42375-1884 |
| 14 | 42375-1934 | 32 | 42375-1885 |
| 15 | 42375-1935 | 33 | 42375-1886 |
| 16 | 42375-1936 | 34 | 42375-1887 |
| 17 | 42375-1937 | 35 | 42375-1888 |
| 18 | 42375-1938 | 36 | 42375-1889 |
| 19 | 42375-1939 | | |

| ENG. NO: 42375-2246/2275 | | | |
|---|---|---|---|
| HEADER NUMBER: | | 42312-0036 | |
| PIN NUMBER: | | 42663-ABA154 | |
| PIN LENGTH: L | | .455 / 11.56 | |
| MATING LENGTH: M | | .240 / 6.09 | |
| GOLD POINT: G | | N/A | |
| PC TAIL LENGTH: P | | .125 / 3.18 | |
| TIN: T | | OVERALL | |
| CKTS: | | 7-36 | |
| KINKS: | | NO | |
| VOIDED CKTS: | | 2,7 | |
| PACKAGING: | | BULK PK-40873-0041 | |
| CKTS | ITEM NUMBER | CKTS | ITEM NUMBER |
| 2 | | 20 | 42375-2259 |
| 3 | | 21 | 42375-2260 |
| 4 | | 22 | 42375-2261 |
| 5 | | 23 | 42375-2262 |
| 6 | | 24 | 42375-2263 |
| 7 | 42375-2246 | 25 | 42375-2264 |
| 8 | 42375-2247 | 26 | 42375-2265 |
| 9 | 42375-2248 | 27 | 42375-2266 |
| 10 | 42375-2249 | 28 | 42375-2267 |
| 11 | 42375-2250 | 29 | 42375-2268 |
| 12 | 42375-2251 | 30 | 42375-2269 |
| 13 | 42375-2252 | 31 | 42375-2270 |
| 14 | 42375-2253 | 32 | 42375-2271 |
| 15 | 42375-2254 | 33 | 42375-2272 |
| 16 | 42375-2255 | 34 | 42375-2273 |
| 17 | 42375-2256 | 35 | 42375-2274 |
| 18 | 42375-2257 | 36 | 42375-2275 |
| 19 | 42375-2258 | | |

SYMBOLS

THIS DRAWING CONTAINS INFORMATION THAT IS PROPRIETARY TO MOLEX ELECTRONIC TECHNOLOGIES, LLC AND SHOULD NOT BE USED WITHOUT WRITTEN PERMISSION

DIMENSION UNITS: MM/IN
SCALE: 1:1

GENERAL TOLERANCES (UNLESS SPECIFIED)

| | MM | INCH |
|---|---|---|
| 4 PLACES | ± | ± |
| 3 PLACES | ± | ± 0.01 |
| 2 PLACES | ± 0.25 | ± |
| 1 PLACE | ± 0.38 | ± |
| 0 PLACES | ± | ± |
| ANGULAR TOL | | ± 0.5 ° |

DRAFT WHERE APPLICABLE MUST REMAIN WITHIN DIMENSIONS

CURRENT REV DESC: GOLD LENGTH SPEC CHANGED AS MIN 2.54- MAX 5.54 FOR A-42375-0037/0071

EC NO: 689596
DRWN: SHRUTJ 2021/09/14
CHK'D: SHRUTJ 2021/12/20
APPR: ISHWARG 2021/12/20

INITIAL REVISION:
DRWN: SCHAFER 2003/02/11
APPR: MARGULIS 2004/02/27

THIRD ANGLE PROJECTION | DRAWING: B-SIZE | SERIES: 42375

molex

KK 100 HEADER ASSY
FLAT VERTICAL BREAKAWAY

PRODUCT CUSTOMER DRAWING

| DOCUMENT NUMBER | DOC TYPE | DOC PART | REVISION |
|---|---|---|---|
| SD-42375-001 | PSD | 001 | V |

| MATERIAL NUMBER | CUSTOMER | SHEET NUMBER |
|---|---|---|
| SEE CHART | GENERAL MARKET | 17 OF 35 |

| DOCUMENT STATUS | P1 | RELEASE DATE | 2021/12/20 12:18:33 |
|---|---|---|---|

FORMAT: Eng-lega-master-tb-prod-B
REVISION: D
DATE: 2018/01/18

| ENG. NO: 42375-2486/2520 | | | |
|---|---|---|---|
| HEADER NUMBER: | 42312-0036 | | |
| PIN NUMBER: | 42663-AFB208 | | |
| PIN LENGTH: L | .475 / 12.07 | | |
| MATING LENGTH: M | .232 / 5.89 | | |
| GOLD POINT: G | .150 / 3.81 | | |
| PC TAIL LENGTH: P | .153 / 3.89 | | |
| TIN: T | .100 / 2.54 | | |
| CKTS: | 2-36 | | |
| KINKS: | NO | | |
| VOIDED CKTS: | NONE | | |
| PACKAGING: | BULK PK-40873-0041 | | |
| CKTS | ITEM NUMBER | CKTS | ITEM NUMBER |
| 2 | 42375-2486 | 19 | 42375-2503 |
| 3 | 42375-2487 | 20 | 42375-2504 |
| | 68300-2008 | 21 | 42375-2505 |
| 4 | 42375-2488 | 22 | 42375-2506 |
| 5 | 42375-2489 | 23 | 42375-2507 |
| 6 | 42375-2490 | 24 | 42375-2508 |
| 7 | 42375-2491 | 25 | 42375-2509 |
| 8 | 42375-2492 | 26 | 42375-2510 |
| 9 | 42375-2493 | 27 | 42375-2511 |
| 10 | 42375-2494 | 28 | 42375-2512 |
| 11 | 42375-2495 | 29 | 42375-2513 |
| 12 | 42375-2496 | 30 | 42375-2514 |
| 13 | 42375-2497 | 31 | 42375-2515 |
| 14 | 42375-2498 | 32 | 42375-2516 |
| 15 | 42375-2499 | 33 | 42375-2517 |
| 16 | 42375-2500 | 34 | 42375-2518 |
| 17 | 42375-2501 | 35 | 42375-2519 |
| 18 | 42375-2502 | 36 | 42375-2520 |

| ENG. NO: 42375-2521/2555 | | | |
|---|---|---|---|
| HEADER NUMBER: | 42312-0036 | | |
| PIN NUMBER: | 42663-AFB228 | | |
| PIN LENGTH: L | .475 / 12.07 | | |
| MATING LENGTH: M | .232 / 5.89 | | |
| GOLD POINT: G | .150 / 3.81 | | |
| PC TAIL LENGTH: P | .153 / 3.89 | | |
| TIN: T | .100 / 2.54 | | |
| CKTS: | 2-36 | | |
| KINKS: | NO | | |
| VOIDED CKTS: | NONE | | |
| PACKAGING: | BULK PK-40873-0041 | | |
| CKTS | ITEM NUMBER | CKTS | ITEM NUMBER |
| 2 | 42375-2521 | 20 | 42375-2539 |
| 3 | 42375-2522 | 21 | 42375-2540 |
| 4 | 42375-2523 | 22 | 42375-2541 |
| 5 | 42375-2524 | 23 | 42375-2542 |
| 6 | 42375-2525 | 24 | 42375-2543 |
| 7 | 42375-2526 | 25 | 42375-2544 |
| 8 | 42375-2527 | 26 | 42375-2545 |
| 9 | 42375-2528 | 27 | 42375-2546 |
| 10 | 42375-2529 | 28 | 42375-2547 |
| 11 | 42375-2530 | 29 | 42375-2548 |
| 12 | 42375-2531 | 30 | 42375-2549 |
| 13 | 42375-2532 | 31 | 42375-2550 |
| 14 | 42375-2533 | 32 | 42375-2551 |
| 15 | 42375-2534 | 33 | 42375-2552 |
| 16 | 42375-2535 | 34 | 42375-2553 |
| 17 | 42375-2536 | 35 | 42375-2554 |
| 18 | 42375-2537 | 36 | 42375-2555 |
| 19 | 42375-2539 | | |

SYMBOLS

= 0

THIS DRAWING CONTAINS INFORMATION THAT IS PROPRIETARY TO MOLEX ELECTRONIC TECHNOLOGIES, LLC AND SHOULD NOT BE USED WITHOUT WRITTEN PERMISSION

| DIMENSION UNITS | SCALE |
|---|---|
| MM/IN | 1:1 |

GENERAL TOLERANCES (UNLESS SPECIFIED)

| | MM | INCH |
|---|---|---|
| 4 PLACES | ± | ± |
| 3 PLACES | ± | ± 0.01 |
| 2 PLACES | ± 0.25 | ± |
| 1 PLACE | ± 0.38 | ± |
| 0 PLACES | ± | ± |
| ANGULAR TOL | ± 0.5 ° | |

DRAFT WHERE APPLICABLE MUST REMAIN WITHIN DIMENSIONS

CURRENT REV DESC: GOLD LENGTH SPEC CHANGED AS MIN 2.54- MAX 5.54 FOR A-42375-0037/0071

EC NO: 689596
DRWN: SHRUTJ 2021/09/14
CHK'D: SHRUTJ 2021/12/20
APPR: ISHWARG 2021/12/20

INITIAL REVISION:
DRWN: SCHAFER 2003/02/11
APPR: MARGULIS 2004/02/27

THIRD ANGLE PROJECTION | DRAWING: B-SIZE | SERIES: 42375

molex

KK 100 HEADER ASSY
FLAT VERTICAL BREAKAWAY

PRODUCT CUSTOMER DRAWING

| DOCUMENT NUMBER | DOC TYPE | DOC PART | REVISION |
|---|---|---|---|
| SD-42375-001 | PSD | 001 | V |

| MATERIAL NUMBER | CUSTOMER | SHEET NUMBER |
|---|---|---|
| SEE CHART | GENERAL MARKET | 18 OF 35 |

| DOCUMENT STATUS | P1 | RELEASE DATE | 2021/12/20 12:18:33 |
|---|---|---|---|

FORMAT: Eng-lega-master-tb-prod-B
REVISION: D
DATE: 2018/01/18

| ENG. NO: 42375-2801/2835 | | | |
|---|---|---|---|
| HEADER NUMBER: | 42312-0036 | | |
| PIN NUMBER: | 42663-HDB228 | | |
| PIN LENGTH: L | 1.200 / 30.48 | | |
| MATING LENGTH: M | 1.000 / 25.40 | | |
| GOLD POINT: G | .200 / 5.08 | | |
| PC TAIL LENGTH: P | .110 / 2.79 | | |
| TIN: T | .200 / 5.08 | | |
| CKTS: | 2-36 | | |
| KINKS: | NO | | |
| VOIDED CKTS: | NONE | | |
| PACKAGING: | BULK | PK-40873-0043 | |
| CKTS | ITEM NUMBER | CKTS | ITEM NUMBER |
| 2 | 42375-2801 | 20 | 42375-2819 |
| 3 | 42375-2802 | 21 | 42375-2820 |
| 4 | 42375-2803 | 22 | 42375-2821 |
| 5 | 42375-2804 | 23 | 42375-2822 |
| 6 | 42375-2805 | 24 | 42375-2823 |
| 7 | 42375-2806 | 25 | 42375-2824 |
| 8 | 42375-2807 | 26 | 42375-2825 |
| 9 | 42375-2808 | 27 | 42375-2826 |
| 10 | 42375-2809 | 28 | 42375-2827 |
| 11 | 42375-2810 | 29 | 42375-2828 |
| 12 | 42375-2811 | 30 | 42375-2829 |
| 13 | 42375-2812 | 31 | 42375-2830 |
| 14 | 42375-2813 | 32 | 42375-2831 |
| 15 | 42375-2814 | 33 | 42375-2832 |
| 16 | 42375-2815 | 34 | 42375-2833 |
| 17 | 42375-2816 | 35 | 42375-2834 |
| 18 | 42375-2817 | 36 | 42375-2835 |
| 19 | 42375-2818 | | |

| ENG. NO: 42375-2836/2870 | | | |
|---|---|---|---|
| HEADER NUMBER: | 42312-0036 | | |
| PIN NUMBER: | 42663-EMA154 | | |
| PIN LENGTH: L | .925 / 23.50 | | |
| MATING LENGTH: M | .625 / 15.88 | | |
| GOLD POINT: G | N/A | | |
| PC TAIL LENGTH: P | .210 / 5.33 | | |
| TIN: T | OVERALL | | |
| CKTS: | 2-36 | | |
| KINKS: | NO | | |
| VOIDED CKTS: | NONE | | |
| PACKAGING: | BULK | PK-40873-0041 | |
| CKTS | ITEM NUMBER | CKTS | ITEM NUMBER |
| 2 | 42375-2836 | 20 | 42375-2854 |
| 3 | 42375-2837 | 21 | 42375-2855 |
| 4 | 42375-2838 | 22 | 42375-2856 |
| 5 | 42375-2839 | 23 | 42375-2857 |
| 6 | 42375-2840 | 24 | 42375-2858 |
| 7 | 42375-2841 | 25 | 42375-2859 |
| 8 | 42375-2842 | 26 | 42375-2860 |
| 9 | 42375-2843 | 27 | 42375-2861 |
| 10 | 42375-2844 | 28 | 42375-2862 |
| 11 | 42375-2845 | 29 | 42375-2863 |
| 12 | 42375-2846 | 30 | 42375-2864 |
| 13 | 42375-2847 | 31 | 42375-2865 |
| 14 | 42375-2848 | 32 | 42375-2866 |
| 15 | 42375-2849 | 33 | 42375-2867 |
| 16 | 42375-2850 | 34 | 42375-2868 |
| 17 | 42375-2851 | 35 | 42375-2869 |
| 18 | 42375-2852 | 36 | 42375-2870 |
| 19 | 42375-2853 | | |

SYMBOLS
= 0
= 0
= 0
= 0
= 0
= 0
= 0
= 0
= 0

THIS DRAWING CONTAINS INFORMATION THAT IS PROPRIETARY TO MOLEX ELECTRONIC TECHNOLOGIES, LLC AND SHOULD NOT BE USED WITHOUT WRITTEN PERMISSION

| DIMENSION UNITS | SCALE |
|---|---|
| MM/IN | 1:1 |

GENERAL TOLERANCES (UNLESS SPECIFIED)

| | MM | INCH |
|---|---|---|
| 4 PLACES | ± | ± |
| 3 PLACES | ± | ± 0.01 |
| 2 PLACES | ± 0.25 | ± |
| 1 PLACE | ± 0.38 | ± |
| 0 PLACES | ± | ± |
| ANGULAR TOL | ± 0.5 ° | |

DRAFT WHERE APPLICABLE MUST REMAIN WITHIN DIMENSIONS

CURRENT REV DESC: GOLD LENGTH SPEC CHANGED AS MIN 2.54- MAX 5.54 FOR A-42375-0037/0071

EC NO: 689596
DRWN: SHRUTJ 2021/09/14
CHK'D: SHRUTJ 2021/12/20
APPR: ISHWARG 2021/12/20

INITIAL REVISION:
DRWN: SCHAFER 2003/02/11
APPR: MARGULIS 2004/02/27

THIRD ANGLE PROJECTION

| DRAWING | SERIES |
|---|---|
| B-SIZE | 42375 |

molex

KK 100 HEADER ASSY
FLAT VERTICAL BREAKAWAY

PRODUCT CUSTOMER DRAWING

| DOCUMENT NUMBER | DOC TYPE | DOC PART | REVISION |
|---|---|---|---|
| SD-42375-001 | PSD | 001 | V |

| MATERIAL NUMBER | CUSTOMER | SHEET NUMBER |
|---|---|---|
| SEE CHART | GENERAL MARKET | 19 OF 35 |

| DOCUMENT STATUS | P1 | RELEASE DATE | 2021/12/20 12:18:33 |
|---|---|---|---|

FORMAT: Eng-lega-master-tb-prod-B
REVISION: D
DATE: 2018/01/18

| ENG. NO: 42375-3044/3078 | | | |
|---|---|---|---|
| HEADER NUMBER: | 42312-0036 | | |
| PIN NUMBER: | 42663-KHB208 | | |
| PIN LENGTH: L | 1.430 / 36.32 | | |
| MATING LENGTH: M | .867 / 22.02 | | |
| GOLD POINT: G | .200 / 5.08 | | |
| PC TAIL LENGTH: P | .473 / 12.01 | | |
| TIN: T | .200 / 5.08 | | |
| CKTS: | 2-36 | | |
| KINKS: | NO | | |
| VOIDED CKTS: | NONE | | |
| PACKAGING: | BULK PK-40873-0043 | | |
| CKTS | ITEM NUMBER | CKTS | ITEM NUMBER |
| 2 | 42375-3044 | 20 | 42375-3062 |
| 3 | 42375-3045 | 21 | 42375-3063 |
| 4 | 42375-3046 | 22 | 42375-3064 |
| 5 | 42375-3047 | 23 | 42375-3065 |
| 6 | 42375-3048 | 24 | 42375-3066 |
| 7 | 42375-3049 | 25 | 42375-3067 |
| 8 | 42375-3050 | 26 | 42375-3068 |
| 9 | 42375-3051 | 27 | 42375-3069 |
| 10 | 42375-3052 | 28 | 42375-3070 |
| 11 | 42375-3053 | 29 | 42375-3071 |
| 12 | 42375-3054 | 30 | 42375-3072 |
| 13 | 42375-3055 | 31 | 42375-3073 |
| 14 | 42375-3056 | 32 | 42375-3074 |
| 15 | 42375-3057 | 33 | 42375-3075 |
| 16 | 42375-3058 | 34 | 42375-3076 |
| 17 | 42375-3059 | 35 | 42375-3077 |
| 18 | 42375-3060 | 36 | 42375-3078 |
| 19 | 42375-3061 | | |

| ENG. NO: 42375-3114/3148 | | | |
|---|---|---|---|
| HEADER NUMBER: | 42312-0036 | | |
| PIN NUMBER: | 42663-BXA154 | | |
| PIN LENGTH: L | .645 / 16.38 | | |
| MATING LENGTH: M | .431 / 10.95 | | |
| GOLD POINT: G | N/A | | |
| PC TAIL LENGTH: P | .124 / 3.15 | | |
| TIN: T | OVERALL | | |
| CKTS: | 2-36 | | |
| KINKS: | NO | | |
| VOIDED CKTS: | NONE | | |
| PACKAGING: | BULK PK-40873-0041 | | |
| CKTS | ITEM NUMBER | CKTS | ITEM NUMBER |
| 2 | 42375-3114 | 20 | 42375-3132 |
| 3 | 42375-3115 | 21 | 42375-3133 |
| 4 | 42375-3116 | 22 | 42375-3134 |
| 5 | 42375-3117 | 23 | 42375-3135 |
| 6 | 42375-3118 | 24 | 42375-3136 |
| 7 | 42375-3119 | 25 | 42375-3137 |
| 8 | 42375-3120 | 26 | 42375-3138 |
| 9 | 42375-3121 | 27 | 42375-3139 |
| 10 | 42375-3122 | 28 | 42375-3140 |
| 11 | 42375-3123 | 29 | 42375-3141 |
| 12 | 42375-3124 | 30 | 42375-3142 |
| 13 | 42375-3125 | 31 | 42375-3143 |
| 14 | 42375-3126 | 32 | 42375-3144 |
| 15 | 42375-3127 | 33 | 42375-3145 |
| 16 | 42375-3128 | 34 | 42375-3146 |
| 17 | 42375-3129 | 35 | 42375-3147 |
| 18 | 42375-3130 | 36 | 42375-3148 |
| 19 | 42375-3131 | | |

SYMBOLS

= 0
= 0
= 0
= 0
= 0
= 0
= 0
= 0
= 0

THIS DRAWING CONTAINS INFORMATION THAT IS PROPRIETARY TO MOLEX ELECTRONIC TECHNOLOGIES, LLC AND SHOULD NOT BE USED WITHOUT WRITTEN PERMISSION

DIMENSION UNITS: MM/IN
SCALE: 1:1

GENERAL TOLERANCES (UNLESS SPECIFIED)

| | MM | INCH |
|---|---|---|
| 4 PLACES | ± | ± |
| 3 PLACES | ± | ± 0.01 |
| 2 PLACES | ± 0.25 | ± |
| 1 PLACE | ± 0.38 | ± |
| 0 PLACES | ± | ± |
| ANGULAR TOL | ± 0.5 ° | |

DRAFT WHERE APPLICABLE MUST REMAIN WITHIN DIMENSIONS

CURRENT REV DESC: GOLD LENGTH SPEC CHANGED AS MIN 2.54- MAX 5.54 FOR A-42375-0037/0071

EC NO: 689596
DRWN: SHRUTJ 2021/09/14
CHK'D: SHRUTJ 2021/12/20
APPR: ISHWARG 2021/12/20

INITIAL REVISION:
DRWN: SCHAFER 2003/02/11
APPR: MARGULIS 2004/02/27

molex

KK 100 HEADER ASSY
FLAT VERTICAL BREAKAWAY

PRODUCT CUSTOMER DRAWING

| DOCUMENT NUMBER | DOC TYPE | DOC PART | REVISION |
|---|---|---|---|
| SD-42375-001 | PSD | 001 | V |

| THIRD ANGLE PROJECTION | DRAWING | SERIES | MATERIAL NUMBER | CUSTOMER | SHEET NUMBER |
|---|---|---|---|---|---|
| | B-SIZE | 42375 | SEE CHART | GENERAL MARKET | 20 OF 35 |

| DOCUMENT STATUS | P1 | RELEASE DATE | 2021/12/20 12:18:33 |
|---|---|---|---|

FORMAT: Eng-lega-master-tb-prod-B
REVISION: D
DATE: 2018/01/18

| ENG. NO: 42375-3149 / 3183 | | | |
|---|---|---|---|
| HEADER NUMBER: | | 42312-0036 | |
| PIN NUMBER: | | 42663-BEB208 | |
| PIN LENGTH: L | | .575 / 14.61 | |
| MATING LENGTH: M | | .350 / 8.89 | |
| GOLD POINT: G | | .200 / 5.08 | |
| PC TAIL LENGTH: P | | .135 / 3.43 | |
| TIN: T | | .200 / 5.08 | |
| CKTS: | | 2-36 | |
| KINKS: | | NO | |
| VOIDED CKTS: | | NONE | |
| PACKAGING: | | BULK PK-40873-0041 | |
| CKTS | ITEM NUMBER | CKTS | ITEM NUMBER |
| 2 | 42375-3149 | 20 | 42375-3167 |
| 3 | 42375-3150 | 21 | 42375-3168 |
| 4 | 42375-3151 | 22 | 42375-3169 |
| 5 | 42375-3152 | 23 | 42375-3170 |
| 6 | 42375-3153 | 24 | 42375-3171 |
| 7 | 42375-3154 | 25 | 42375-3172 |
| 8 | 42375-3155 | 26 | 42375-3173 |
| 9 | 42375-3156 | 27 | 42375-3174 |
| 10 | 42375-3157 | 28 | 42375-3175 |
| 11 | 42375-3158 | 29 | 42375-3176 |
| 12 | 42375-3159 | 30 | 42375-3177 |
| 13 | 42375-3160 | 31 | 42375-3178 |
| 14 | 42375-3161 | 32 | 42375-3179 |
| 15 | 42375-3162 | 33 | 42375-3180 |
| 16 | 42375-3163 | 34 | 42375-3181 |
| 17 | 42375-3164 | 35 | 42375-3182 |
| 18 | 42375-3165 | 36 | 42375-3183 |
| 19 | 42375-3166 | | |

| ENG. NO: 42375-3184 / 3218 | | | |
|---|---|---|---|
| HEADER NUMBER: | | 42312-0036 | |
| PIN NUMBER: | | 42663-GNB208 | |
| PIN LENGTH: L | | 1.140 / 28.96 | |
| MATING LENGTH: M | | .913 / 23.20 | |
| GOLD POINT: G | | .200 / 5.08 | |
| PC TAIL LENGTH: P | | .137 / 3.48 | |
| TIN: T | | .200 / 5.08 | |
| CKTS: | | 2-36 | |
| KINKS: | | NO | |
| VOIDED CKTS: | | NONE | |
| PACKAGING: | | BULK PK-40873-0043 | |
| CKTS | ITEM NUMBER | CKTS | ITEM NUMBER |
| 2 | 42375-3184 | 20 | 42375-3202 |
| 3 | 42375-3185 | 21 | 42375-3203 |
| 4 | 42375-3186 | 22 | 42375-3204 |
| 5 | 42375-3187 | 23 | 42375-3205 |
| 6 | 42375-3188 | 24 | 42375-3206 |
| 7 | 42375-3189 | 25 | 42375-3207 |
| 8 | 42375-3190 | 26 | 42375-3208 |
| 9 | 42375-3191 | 27 | 42375-3209 |
| 10 | 42375-3192 | 28 | 42375-3210 |
| 11 | 42375-3193 | 29 | 42375-3211 |
| 12 | 42375-3194 | 30 | 42375-3212 |
| 13 | 42375-3195 | 31 | 42375-3213 |
| 14 | 42375-3196 | 32 | 42375-3214 |
| 15 | 42375-3197 | 33 | 42375-3215 |
| 16 | 42375-3198 | 34 | 42375-3216 |
| 17 | 42375-3199 | 35 | 42375-3217 |
| 18 | 42375-3200 | 36 | 42375-3218 |
| 19 | 42375-3201 | | |

| ENG. NO: 42375-3219 / 3253 | | | |
|---|---|---|---|
| HEADER NUMBER: | | 42312-0036 | |
| PIN NUMBER: | | 42663-BPA154 | |
| PIN LENGTH: L | | .620 / 15.75 | |
| MATING LENGTH: M | | .280 / 7.11 | |
| GOLD POINT: G | | NA | |
| PC TAIL LENGTH: P | | .250 / 6.35 | |
| TIN: T | | OVERALL | |
| CKTS: | | 2-36 | |
| KINKS: | | NO | |
| VOIDED CKTS: | | NONE | |
| PACKAGING: | | BULK PK-40873-0041 | |
| CKTS | ITEM NUMBER | CKTS | ITEM NUMBER |
| 2 | 42375-3219 | 20 | 42375-3237 |
| 3 | 42375-3220 | 21 | 42375-3238 |
| 4 | 42375-3221 | 22 | 42375-3239 |
| 5 | 42375-3222 | 23 | 42375-3240 |
| 6 | 42375-3223 | 24 | 42375-3241 |
| 7 | 42375-3224 | 25 | 42375-3242 |
| 8 | 42375-3225 | 26 | 42375-3243 |
| 9 | 42375-3226 | 27 | 42375-3244 |
| 10 | 42375-3227 | 28 | 42375-3245 |
| 11 | 42375-3228 | 29 | 42375-3246 |
| 12 | 42375-3229 | 30 | 42375-3247 |
| 13 | 42375-3230 | 31 | 42375-3248 |
| 14 | 42375-3231 | 32 | 42375-3249 |
| 15 | 42375-3232 | 33 | 42375-3250 |
| 16 | 42375-3233 | 34 | 42375-3251 |
| 17 | 42375-3234 | 35 | 42375-3252 |
| 18 | 42375-3235 | 36 | 42375-3253 |
| 19 | 42375-3236 | | |

SYMBOLS

= 0
= 0
= 0
= 0
= 0
= 0
= 0
= 0
= 0

THIS DRAWING CONTAINS INFORMATION THAT IS PROPRIETARY TO MOLEX ELECTRONIC TECHNOLOGIES, LLC AND SHOULD NOT BE USED WITHOUT WRITTEN PERMISSION

| DIMENSION UNITS | SCALE |
|---|---|
| MM/IN | 1:1 |

GENERAL TOLERANCES (UNLESS SPECIFIED)

| | MM | INCH |
|---|---|---|
| 4 PLACES | ± | ± |
| 3 PLACES | ± | ± 0.01 |
| 2 PLACES | ± 0.25 | ± |
| 1 PLACE | ± 0.38 | ± |
| 0 PLACES | ± | ± |
| ANGULAR TOL | ± 0.5 ° | |

DRAFT WHERE APPLICABLE MUST REMAIN WITHIN DIMENSIONS

CURRENT REV DESC: GOLD LENGTH SPEC CHANGED AS MIN 2.54- MAX 5.54 FOR A-42375-0037/0071

EC NO: 689596

| | | |
|---|---|---|
| DRWN: | SHRUTJ | 2021/09/14 |
| CHK'D: | SHRUTJ | 2021/12/20 |
| APPR: | ISHWARG | 2021/12/20 |

INITIAL REVISION:

| | | |
|---|---|---|
| DRWN: | SCHAFER | 2003/02/11 |
| APPR: | MARGULIS | 2004/02/27 |

THIRD ANGLE PROJECTION

| DRAWING | SERIES |
|---|---|
| B-SIZE | 42375 |

molex

KK 100 HEADER ASSY
FLAT VERTICAL BREAKAWAY

PRODUCT CUSTOMER DRAWING

| DOCUMENT NUMBER | DOC TYPE | DOC PART | REVISION |
|---|---|---|---|
| SD-42375-001 | PSD | 001 | V |

| MATERIAL NUMBER | CUSTOMER | SHEET NUMBER |
|---|---|---|
| SEE CHART | GENERAL MARKET | 21 OF 35 |

| DOCUMENT STATUS | P1 | RELEASE DATE | 2021/12/20 12:18:33 |
|---|---|---|---|

FORMAT: Eng-tega-master-tb-prod-B
REVISION: D
DATE: 2018/01/18

| ENG. NO: 42375-3254 / 3288 | | | |
|---|---|---|---|
| HEADER NUMBER: | 42312-0036 | | |
| PIN NUMBER: | 42663-DMA154 | | |
| PIN LENGTH: L | .820 / 20.83 | | |
| MATING LENGTH: M | .590 / 14.99 | | |
| GOLD POINT: G | NA | | |
| PC TAIL LENGTH: P | .140 / 3.56 | | |
| TIN: T | OVERALL | | |
| CKTS: | 2-36 | | |
| KINKS: | NO | | |
| VOIDED CKTS: | NONE | | |
| PACKAGING: | BULK | PK-40873-0041 | |
| CKTS | ITEM NUMBER | CKTS | ITEM NUMBER |
| 2 | 42375-3254 | 20 | 42375-3272 |
| 3 | 42375-3255 | 21 | 42375-3273 |
| 4 | 42375-3256 | 22 | 42375-3274 |
| 5 | 42375-3257 | 23 | 42375-3275 |
| 6 | 42375-3258 | 24 | 42375-3276 |
| 7 | 42375-3259 | 25 | 42375-3277 |
| 8 | 42375-3260 | 26 | 42375-3278 |
| 9 | 42375-3261 | 27 | 42375-3279 |
| 10 | 42375-3262 | 28 | 42375-3280 |
| 11 | 42375-3263 | 29 | 42375-3281 |
| 12 | 42375-3264 | 30 | 42375-3282 |
| 13 | 42375-3265 | 31 | 42375-3283 |
| 14 | 42375-3266 | 32 | 42375-3284 |
| 15 | 42375-3267 | 33 | 42375-3285 |
| 16 | 42375-3268 | 34 | 42375-3286 |
| 17 | 42375-3269 | 35 | 42375-3287 |
| 18 | 42375-3270 | 36 | 42375-3288 |
| 19 | 42375-3271 | | |

| ENG. NO: 42375-3289 / 3323 | | | |
|---|---|---|---|
| HEADER NUMBER: | 42312-0036 | | |
| PIN NUMBER: | 42663-FNA154 | | |
| PIN LENGTH: L | 1.035 / 26.29 | | |
| MATING LENGTH: M | .358 / 9.09 | | |
| GOLD POINT: G | NA | | |
| PC TAIL LENGTH: P | .587 / 14.91 | | |
| TIN: T | OVERALL | | |
| CKTS: | 2-36 | | |
| KINKS: | NO | | |
| VOIDED CKTS: | NONE | | |
| PACKAGING: | BULK | PK-40873-0043 | |
| CKTS | ITEM NUMBER | CKTS | ITEM NUMBER |
| 2 | 42375-3289 | 20 | 42375-3307 |
| 3 | 42375-3290 | 21 | 42375-3308 |
| 4 | 42375-3291 | 22 | 42375-3309 |
| 5 | 42375-3292 | 23 | 42375-3310 |
| 6 | 42375-3293 | 24 | 42375-3311 |
| 7 | 42375-3294 | 25 | 42375-3312 |
| 8 | 42375-3295 | 26 | 42375-3313 |
| 9 | 42375-3296 | 27 | 42375-3314 |
| 10 | 42375-3297 | 28 | 42375-3315 |
| 11 | 42375-3298 | 29 | 42375-3316 |
| 12 | 42375-3299 | 30 | 42375-3317 |
| 13 | 42375-3300 | 31 | 42375-3318 |
| 14 | 42375-3301 | 32 | 42375-3319 |
| 15 | 42375-3302 | 33 | 42375-3320 |
| 16 | 42375-3303 | 34 | 42375-3321 |
| 17 | 42375-3304 | 35 | 42375-3322 |
| 18 | 42375-3305 | 36 | 42375-3323 |
| 19 | 42375-3306 | | |

| ENG. NO: 42375-3324 / 3358 | | | |
|---|---|---|---|
| HEADER NUMBER: | 42312-0036 | | |
| PIN NUMBER: | 42663-CCA154 | | |
| PIN LENGTH: L | .670 / 17.02 | | |
| MATING LENGTH: M | .440 / 11.18 | | |
| GOLD POINT: G | NA | | |
| PC TAIL LENGTH: P | .140 / 3.56 | | |
| TIN: T | OVERALL | | |
| CKTS: | 2-36 | | |
| KINKS: | SMES-42003 | | |
| VOIDED CKTS: | NONE | | |
| PACKAGING: | BULK | PK-40873-0041 | |
| CKTS | ITEM NUMBER | CKTS | ITEM NUMBER |
| 2 | 42375-3324 | 20 | 42375-3342 |
| 3 | 42375-3325 | 21 | 42375-3343 |
| 4 | 42375-3326 | 22 | 42375-3344 |
| 5 | 42375-3327 | 23 | 42375-3345 |
| 6 | 42375-3328 | 24 | 42375-3346 |
| 7 | 42375-3329 | 25 | 42375-3347 |
| 8 | 42375-3330 | 26 | 42375-3348 |
| 9 | 42375-3331 | 27 | 42375-3349 |
| 10 | 42375-3332 | 28 | 42375-3350 |
| 11 | 42375-3333 | 29 | 42375-3351 |
| 12 | 42375-3334 | 30 | 42375-3352 |
| 13 | 42375-3335 | 31 | 42375-3353 |
| 14 | 42375-3336 | 32 | 42375-3354 |
| 15 | 42375-3337 | 33 | 42375-3355 |
| 16 | 42375-3338 | 34 | 42375-3356 |
| 17 | 42375-3339 | 35 | 42375-3357 |
| 18 | 42375-3340 | 36 | 42375-3358 |
| 19 | 42375-3341 | | |

SYMBOLS

= 0
= 0
= 0
= 0
= 0
= 0
= 0
= 0
= 0

THIS DRAWING CONTAINS INFORMATION THAT IS PROPRIETARY TO MOLEX ELECTRONIC TECHNOLOGIES, LLC AND SHOULD NOT BE USED WITHOUT WRITTEN PERMISSION

DIMENSION UNITS: MM/IN
SCALE: 1:1

GENERAL TOLERANCES (UNLESS SPECIFIED)

| | MM | INCH |
|---|---|---|
| 4 PLACES | ± | ± |
| 3 PLACES | ± | ± 0.01 |
| 2 PLACES | ± 0.25 | ± |
| 1 PLACE | ± 0.38 | ± |
| 0 PLACES | ± | ± |
| ANGULAR TOL | ± 0.5 ° | |

DRAFT WHERE APPLICABLE MUST REMAIN WITHIN DIMENSIONS

CURRENT REV DESC: GOLD LENGTH SPEC CHANGED AS MIN 2.54- MAX 5.54 FOR A-42375-0037/0071

EC NO: 689596
DRWN: SHRUTJ 2021/09/14
CHK'D: SHRUTJ 2021/12/20
APPR: ISHWARG 2021/12/20

INITIAL REVISION:
DRWN: SCHAFER 2003/02/11
APPR: MARGULIS 2004/02/27

THIRD ANGLE PROJECTION

DRAWING: B-SIZE
SERIES: 42375

molex

KK 100 HEADER ASSY
FLAT VERTICAL BREAKAWAY

PRODUCT CUSTOMER DRAWING

| DOCUMENT NUMBER | DOC TYPE | DOC PART | REVISION |
|---|---|---|---|
| SD-42375-001 | PSD | 001 | V |

| MATERIAL NUMBER | CUSTOMER | SHEET NUMBER |
|---|---|---|
| SEE CHART | GENERAL MARKET | 22 OF 35 |

| DOCUMENT STATUS | P1 | RELEASE DATE | 2021/12/20 12:18:33 |
|---|---|---|---|

FORMAT: Eng-lega-master-tb-prod-B
REVISION: D
DATE: 2018/01/18

| ENG. NO: 42375-3359 / 3393 | | | |
|---|---|---|---|
| HEADER NUMBER: | 42312-0036 | | |
| PIN NUMBER: | 42663-ABB228 | | |
| PIN LENGTH: L | .455 / 11.56 | | |
| MATING LENGTH: M | .170 / 4.32 | | |
| GOLD POINT: G | .100 / 2.54 | | |
| PC TAIL LENGTH: P | .195 / 4.95 | | |
| TIN: T | .100 / 2.54 | | |
| CKTS: | 2-36 | | |
| KINKS: | NO | | |
| VOIDED CKTS: | NONE | | |
| PACKAGING: | BULK | PK-40873-0041 | |
| CKTS | ITEM NUMBER | CKTS | ITEM NUMBER |
| 2 | 42375-3359 | 20 | 42375-3377 |
| 3 | 42375-3360 | 21 | 42375-3378 |
| 4 | 42375-3361 | 22 | 42375-3379 |
| 5 | 42375-3362 | 23 | 42375-3380 |
| 6 | 42375-3363 | 24 | 42375-3381 |
| 7 | 42375-3364 | 25 | 42375-3382 |
| 8 | 42375-3365 | 26 | 42375-3383 |
| 9 | 42375-3366 | 27 | 42375-3384 |
| 10 | 42375-3367 | 28 | 42375-3385 |
| 11 | 42375-3368 | 29 | 42375-3386 |
| 12 | 42375-3369 | 30 | 42375-3387 |
| 13 | 42375-3370 | 31 | 42375-3388 |
| 14 | 42375-3371 | 32 | 42375-3389 |
| 15 | 42375-3372 | 33 | 42375-3390 |
| 16 | 42375-3373 | 34 | 42375-3391 |
| 17 | 42375-3374 | 35 | 42375-3392 |
| 18 | 42375-3375 | 36 | 42375-3393 |
| 19 | 42375-3376 | | |

| ENG. NO: 42375-3394 / 3428 | | | |
|---|---|---|---|
| HEADER NUMBER: | 42312-0036 | | |
| PIN NUMBER: | 42663-EZB208 | | |
| PIN LENGTH: L | .970/24.64 | | |
| MATING LENGTH: M | .780/19.81 | | |
| GOLD POINT: G | .200/5.08 | | |
| PC TAIL LENGTH: P | .100/ 2.54 | | |
| TIN: T | .200/5.08 | | |
| CKTS: | 2-36 | | |
| KINKS: | NO | | |
| VOIDED CKTS: | NONE | | |
| PACKAGING: | BULK | PK-40873-0043 | |
| CKTS | ITEM NUMBER | CKTS | ITEM NUMBER |
| 2 | 42375-3394 | 20 | 42375-3412 |
| 3 | 42375-3395 | 21 | 42375-3413 |
| 4 | 42375-3396 | 22 | 42375-3414 |
| 5 | 42375-3397 | 23 | 42375-3415 |
| 6 | 42375-3398 | 24 | 42375-3416 |
| 7 | 42375-3399 | 25 | 42375-3417 |
| 8 | 42375-3400 | 26 | 42375-3418 |
| 9 | 42375-3401 | 27 | 42375-3419 |
| 10 | 42375-3402 | 28 | 42375-3420 |
| 11 | 42375-3403 | 29 | 42375-3421 |
| 12 | 42375-3404 | 30 | 42375-3422 |
| 13 | 42375-3405 | 31 | 42375-3423 |
| 14 | 42375-3406 | 32 | 42375-3424 |
| 15 | 42375-3407 | 33 | 42375-3425 |
| 16 | 42375-3408 | 34 | 42375-3426 |
| 17 | 42375-3409 | 35 | 42375-3427 |
| 18 | 42375-3410 | 36 | 42375-3428 |
| 19 | 42375-3411 | | |

| ENG. NO: 42375-3429 / 3463 | | | |
|---|---|---|---|
| HEADER NUMBER: | 42312-0036 | | |
| PIN NUMBER: | 42663-ARA154 | | |
| PIN LENGTH: L | .520/13.21 | | |
| MATING LENGTH: M | .386/9.80 | | |
| GOLD POINT: G | N/A | | |
| PC TAIL LENGTH: P | .044/1.12 | | |
| TIN: T | OVERALL | | |
| CKTS: | 2-36 | | |
| KINKS: | NO | | |
| VOIDED CKTS: | NONE | | |
| PACKAGING: | BULK | PK-40873-0041 | |
| CKTS | ITEM NUMBER | CKTS | ITEM NUMBER |
| 2 | 42375-3429 | 20 | 42375-3447 |
| 3 | 42375-3430 | 21 | 42375-3448 |
| 4 | 42375-3431 | 22 | 42375-3449 |
| 5 | 42375-3432 | 23 | 42375-3450 |
| 6 | 42375-3433 | 24 | 42375-3451 |
| 7 | 42375-3434 | 25 | 42375-3452 |
| 8 | 42375-3435 | 26 | 42375-3453 |
| 9 | 42375-3436 | 27 | 42375-3454 |
| 10 | 42375-3437 | 28 | 42375-3455 |
| 11 | 42375-3438 | 29 | 42375-3456 |
| 12 | 42375-3439 | 30 | 42375-3457 |
| 13 | 42375-3440 | 31 | 42375-3458 |
| 14 | 42375-3441 | 32 | 42375-3459 |
| 15 | 42375-3442 | 33 | 42375-3460 |
| 16 | 42375-3443 | 34 | 42375-3461 |
| 17 | 42375-3444 | 35 | 42375-3462 |
| 18 | 42375-3445 | 36 | 42375-3463 |
| 19 | 42375-3446 | | |

SYMBOLS

= 0

= 0

= 0

= 0

= 0

= 0

= 0

= 0

= 0

THIS DRAWING CONTAINS INFORMATION THAT IS PROPRIETARY TO MOLEX ELECTRONIC TECHNOLOGIES, LLC AND SHOULD NOT BE USED WITHOUT WRITTEN PERMISSION

| DIMENSION UNITS | SCALE |
|---|---|
| MM/IN | 1:1 |

GENERAL TOLERANCES (UNLESS SPECIFIED)

| | MM | INCH |
|---|---|---|
| 4 PLACES | ± | ± |
| 3 PLACES | ± | ± 0.01 |
| 2 PLACES | ± 0.25 | ± |
| 1 PLACE | ± 0.38 | ± |
| 0 PLACES | ± | ± |
| ANGULAR TOL | ± 0.5 ° | |

DRAFT WHERE APPLICABLE MUST REMAIN WITHIN DIMENSIONS

CURRENT REV DESC: GOLD LENGTH SPEC CHANGED AS MIN 2.54- MAX 5.54 FOR A-42375-0037/0071

EC NO: 689596

DRWN: SHRUTJ 2021/09/14

CHK'D: SHRUTJ 2021/12/20

APPR: ISHWARG 2021/12/20

INITIAL REVISION:

DRWN: SCHAFER 2003/02/11

APPR: MARGULIS 2004/02/27

THIRD ANGLE PROJECTION

DRAWING: B-SIZE

SERIES: 42375

molex

KK 100 HEADER ASSY
FLAT VERTICAL BREAKAWAY

PRODUCT CUSTOMER DRAWING

| DOCUMENT NUMBER | DOC TYPE | DOC PART | REVISION |
|---|---|---|---|
| SD-42375-001 | PSD | 001 | V |

| MATERIAL NUMBER | CUSTOMER | SHEET NUMBER |
|---|---|---|
| SEE CHART | GENERAL MARKET | 23 OF 35 |

| DOCUMENT STATUS | P1 | RELEASE DATE | 2021/12/20 12:18:33 |
|---|---|---|---|

FORMAT: Eng-lega-master-tb-prod-B
REVISION: D
DATE: 2018/01/18

| ENG. NO: 42375-3464 / 3498 | | | |
|---|---|---|---|
| HEADER NUMBER: | 42312-0036 | | |
| PIN NUMBER: | 42663-CJA154 | | |
| PIN LENGTH: L | .700/17.78 | | |
| MATING LENGTH: M | .500/12.70 | | |
| GOLD POINT: G | N/A | | |
| PC TAIL LENGTH: P | 110/2.79 | | |
| TIN: T | OVERALL | | |
| CKTS: | 2-36 | | |
| KINKS: | NO | | |
| VOIDED CKTS: | #2 | | |
| PACKAGING: | BULK PK-40873-0041 | | |
| CKTS | ITEM NUMBER | CKTS | ITEM NUMBER |
| 2 | 42375-3464 | 20 | 42375-3482 |
| 3 | 42375-3465 | 21 | 42375-3483 |
| 4 | 42375-3466 | 22 | 42375-3484 |
| 5 | 42375-3467 | 23 | 42375-3480 5 |
| 6 | 42375-3468 | 24 | 42375-3486 |
| 7 | 42375-3469 | 25 | 42375-3487 |
| 8 | 42375-3470 | 26 | 42375-3488 |
| 9 | 42375-3471 | 27 | 42375-3489 |
| 10 | 42375-3472 | 28 | 42375-34890 |
| 11 | 42375-3473 | 29 | 42375-3491 |
| 12 | 42375-3474 | 30 | 42375-3492 |
| 13 | 42375-3475 | 31 | 42375-3493 |
| 14 | 42375-3476 | 32 | 42375-3494 |
| 15 | 42375-3470 7 | 33 | 42375-3495 |
| 16 | 42375-3478 | 34 | 42375-3496 |
| 17 | 42375-3479 | 35 | 42375-3497 |
| 18 | 42375-3480 | 36 | 42375-3498 |
| 19 | 42375-3481 | | |

| ENG. NO: 42375-3499/3533 | | | |
|---|---|---|---|
| HEADER NUMBER: | 42312-0036 | | |
| PIN NUMBER: | 42663-ETA154 | | |
| PIN LENGTH: L | .950/24.13 | | |
| MATING LENGTH: M | .750/19.05 | | |
| GOLD POINT: G | N/A | | |
| PC TAIL LENGTH: P | 110/2.79 | | |
| TIN: T | OVERALL | | |
| CKTS: | 2-36 | | |
| KINKS: | NO | | |
| VOIDED CKTS: | NONE | | |
| PACKAGING: | BULK PK-40873-0043 | | |
| CKTS | ITEM NUMBER | CKTS | ITEM NUMBER |
| 2 | 42375-3499 | 20 | 42375-3517 |
| 3 | 42375-3500 | 21 | 42375-3518 |
| 4 | 42375-3501 | 22 | 42375-3519 |
| 5 | 42375-3502 | 23 | 42375-3520 |
| 6 | 42375-3503 | 24 | 42375-3521 |
| 7 | 42375-3504 | 25 | 42375-3522 |
| 8 | 42375-3505 | 26 | 42375-3523 |
| 9 | 42375-3506 | 27 | 42375-3524 |
| 10 | 42375-3507 | 28 | 42375-3525 |
| 11 | 42375-3508 | 29 | 42375-3526 |
| 12 | 42375-3509 | 30 | 42375-3527 |
| 13 | 42375-3510 | 31 | 42375-3528 |
| 14 | 42375-3511 | 32 | 42375-3529 |
| 15 | 42375-3512 | 33 | 42375-3530 |
| 16 | 42375-3513 | 34 | 42375-3531 |
| 17 | 42375-3514 | 35 | 42375-3532 |
| 18 | 42375-3515 | 36 | 42375-3533 |
| 19 | 42375-3516 | | |

| ENG. NO: 42375-3534/3568 | | | |
|---|---|---|---|
| HEADER NUMBER: | 42312-0036 | | |
| PIN NUMBER: | 42663-AWB208 | | |
| PIN LENGTH: L | .535/13.59 | | |
| MATING LENGTH: M | .235/5.97 | | |
| GOLD POINT: G | .200/5.08 | | |
| PC TAIL LENGTH: P | .210/5.33 | | |
| TIN: T | .100/2.54 | | |
| CKTS: | 2-36 | | |
| KINKS: | NO | | |
| VOIDED CKTS: | NONE | | |
| PACKAGING: | BULK PK-40873-0041 | | |
| CKTS | ITEM NUMBER | CKTS | ITEM NUMBER |
| 2 | 42375-3534 | 20 | 42375-3572 |
| 3 | 42375-3535 | 21 | 42375-3573 |
| 4 | 42375-3536 | 22 | 42375-3574 |
| 5 | 42375-3537 | 23 | 42375-3575 |
| 6 | 42375-3538 | 24 | 42375-3576 |
| 7 | 42375-3539 | 25 | 42375-3577 |
| 8 | 42375-3560 | 26 | 42375-3578 |
| 9 | 42375-3561 | 27 | 42375-3579 |
| 10 | 42375-3562 | 28 | 42375-3580 |
| 11 | 42375-3563 | 29 | 42375-3581 |
| 12 | 42375-3564 | 30 | 42375-3582 |
| 13 | 42375-3565 | 31 | 42375-3583 |
| 14 | 42375-3566 | 32 | 42375-3584 |
| 15 | 42375-3567 | 33 | 42375-3585 |
| 16 | 42375-3568 | 34 | 42375-3586 |
| 17 | 42375-3569 | 35 | 42375-3587 |
| 18 | 42375-3570 | 36 | 42375-3588 |
| 19 | 42375-3571 | | |

SYMBOLS

= 0
= 0
= 0
= 0
= 0
= 0
= 0
= 0
= 0

THIS DRAWING CONTAINS INFORMATION THAT IS PROPRIETARY TO MOLEX ELECTRONIC TECHNOLOGIES, LLC AND SHOULD NOT BE USED WITHOUT WRITTEN PERMISSION

DIMENSION UNITS: MM/IN
SCALE: 1:1

GENERAL TOLERANCES (UNLESS SPECIFIED)

| | MM | INCH |
|---|---|---|
| 4 PLACES | ± | ± |
| 3 PLACES | ± | ± 0.01 |
| 2 PLACES | ± 0.25 | ± |
| 1 PLACE | ± 0.38 | ± |
| 0 PLACES | ± | ± |
| ANGULAR TOL | ± 0.5 ° | |

DRAFT WHERE APPLICABLE MUST REMAIN WITHIN DIMENSIONS

CURRENT REV DESC: GOLD LENGTH SPEC CHANGED AS MIN 2.54- MAX 5.54 FOR A-42375-0037/0071

EC NO: 689596
DRWN: SHRUTJ 2021/09/14
CHK'D: SHRUTJ 2021/12/20
APPR: ISHWARG 2021/12/20

INITIAL REVISION:
DRWN: SCHAFER 2003/02/11
APPR: MARGULIS 2004/02/27

THIRD ANGLE PROJECTION

DRAWING: B-SIZE
SERIES: 42375

molex

KK 100 HEADER ASSY
FLAT VERTICAL BREAKAWAY

PRODUCT CUSTOMER DRAWING

| DOCUMENT NUMBER | DOC TYPE | DOC PART | REVISION |
|---|---|---|---|
| SD-42375-001 | PSD | 001 | V |

| MATERIAL NUMBER | CUSTOMER | SHEET NUMBER |
|---|---|---|
| SEE CHART | GENERAL MARKET | 24 OF 35 |

| DOCUMENT STATUS | P1 | RELEASE DATE | 2021/12/20 12:18:33 |
|---|---|---|---|

FORMAT: Eng-lega-master-tb-prod-B
REVISION: D
DATE: 2018/01/18

| ENG. NO: A-42375-3569/3603 | | | | | |
|---|---|---|---|---|---|
| HEADER NUMBER: | | | 42312-0036 | | |
| PIN NUMBER: | | | 42663-ABB208 | | |
| PIN LENGTH: L | | | .530 / 13.46 | | |
| MATING LENGTH: M | | | .240 / 6.09 | | |
| GOLD POINT: G | | | .100 / 2.54 | | |
| PC TAIL LENGTH: P | | | .125 / 3.18 | | |
| TIN: T | | | .100 / 2.54 | | |
| CKTS: | | | 4-36 | | |
| KINKS: | | | NO | | |
| VOIDED CKTS: | | | 5 | | |
| PACKAGING: | | | BULK PK-40873-0041 | | |
| CKTS | MATERIAL NUMBER | ENG NUMBER | CKTS | MATERIAL NUMBER | ENG NUMBER |
| 2 | | | 20 | 423753587 | 42375-3587 |
| 3 | | | 21 | 423753588 | 42375-3588 |
| 4 | | | 22 | 423753589 | 42375-3589 |
| 5 | 423753572 | 42375-3572 | 23 | 423753590 | 42375-3590 |
| 6 | 423753573 | 42375-3573 | 24 | 423753591 | 42375-3591 |
| 7 | 423753574 | 42375-3574 | 25 | 423753592 | 42375-3592 |
| 8 | 423753575 | 42375-3575 | 26 | 423753593 | 42375-3593 |
| 9 | 423753576 | 42375-3576 | 27 | 423753594 | 42375-3594 |
| 10 | 423753577 | 42375-3577 | 28 | 423753595 | 42375-3595 |
| 11 | 423753578 | 42375-3578 | 29 | 423753596 | 42375-3596 |
| 12 | 423753579 | 42375-3579 | 30 | 423753597 | 42375-3597 |
| 13 | 423753580 | 42375-3580 | 31 | 423753598 | 42375-3598 |
| 14 | 423753581 | 42375-3581 | 32 | 423753599 | 42375-3599 |
| 15 | 423753582 | 42375-3582 | 33 | 423753600 | 42375-3600 |
| 16 | 423753583 | 42375-3583 | 34 | 423753601 | 42375-3601 |
| 17 | 423753584 | 42375-3584 | 35 | 423753602 | 42375-3602 |
| 18 | 423753585 | 42375-3585 | 36 | 423753603 | 42375-3603 |
| 19 | 423753586 | 42375-3586 | | | |

| ENG. NO: A-42375-2974/3008 | | | | | |
|---|---|---|---|---|---|
| HEADER NUMBER: | | | 42312-0036 | | |
| PIN NUMBER: | | | 42663-FKB228 | | |
| PIN LENGTH: L | | | 1.020 / 25.91 | | |
| MATING LENGTH: M | | | .805 / 20.45 | | |
| GOLD POINT: G | | | .200 / 5.08 | | |
| PC TAIL LENGTH: P | | | .125 / 3.18 | | |
| TIN: T | | | .200 / 5.08 | | |
| CKTS: | | | 2-36 | | |
| KINKS: | | | NO | | |
| VOIDED CKTS: | | | NONE | | |
| PACKAGING: | | | BULK PK-40873-0043 | | |
| CKTS | MATERIAL NUMBER | ENG NUMBER | CKTS | MATERIAL NUMBER | ITEM NUMBER |
| 2 | | | 20 | | |
| 3 | | | 21 | | |
| 4 | | | 22 | | |
| 5 | 423752977 | 42375-2977 | 23 | | |
| 6 | | | 24 | | |
| 7 | | | 25 | | |
| 8 | | | 26 | | |
| 9 | | | 27 | | |
| 10 | | | 28 | | |
| 11 | | | 29 | | |
| 12 | | | 30 | | |
| 13 | | | 31 | | |
| 14 | | | 32 | | |
| 15 | | | 33 | | |
| 16 | | | 34 | | |
| 17 | | | 35 | | |
| 18 | | | 36 | | |
| 19 | | | | | |

SYMBOLS

= 0
= 0
= 0
= 0
= 0
= 0
= 0
= 0
= 0

THIS DRAWING CONTAINS INFORMATION THAT IS PROPRIETARY TO MOLEX ELECTRONIC TECHNOLOGIES, LLC AND SHOULD NOT BE USED WITHOUT WRITTEN PERMISSION

DIMENSION UNITS: MM/IN
SCALE: 1:1

GENERAL TOLERANCES (UNLESS SPECIFIED)

| | MM | INCH |
|---|---|---|
| 4 PLACES | ± | ± |
| 3 PLACES | ± | ± 0.01 |
| 2 PLACES | ± 0.25 | ± |
| 1 PLACE | ± 0.38 | ± |
| 0 PLACES | ± | ± |
| ANGULAR TOL | ± 0.5 ° | |

DRAFT WHERE APPLICABLE MUST REMAIN WITHIN DIMENSIONS

CURRENT REV DESC: GOLD LENGTH SPEC CHANGED AS MIN 2.54- MAX 5.54 FOR A-42375-0037/0071

EC NO: 689596
DRWN: SHRUTJ 2021/09/14
CHK'D: SHRUTJ 2021/12/20
APPR: ISHWARG 2021/12/20

INITIAL REVISION:
DRWN: SCHAFER 2003/02/11
APPR: MARGULIS 2004/02/27

THIRD ANGLE PROJECTION

DRAWING: B-SIZE
SERIES: 42375

molex

KK 100 HEADER ASSY
FLAT VERTICAL BREAKAWAY

PRODUCT CUSTOMER DRAWING

| DOCUMENT NUMBER | DOC TYPE | DOC PART | REVISION |
|---|---|---|---|
| SD-42375-001 | PSD | 001 | V |

| MATERIAL NUMBER | CUSTOMER | SHEET NUMBER |
|---|---|---|
| SEE CHART | GENERAL MARKET | 25 OF 35 |

| DOCUMENT STATUS | P1 | RELEASE DATE | 2021/12/20 12:18:33 |
|---|---|---|---|

FORMAT: Eng-lega-master-tb-prod-B
REVISION: D
DATE: 2018/01/18

| ENG. NO: A-42375-3604/3637 | | | | | |
|---|---|---|---|---|---|
| HEADER NUMBER: | | | 42312-0036 | | |
| PIN NUMBER: | | | 42663-AXA154 | | |
| PIN LENGTH: L | | | .540 / 13.72 | | |
| MATING LENGTH: M | | | .380 / 9.65 | | |
| GOLD POINT: G | | | N/A | | |
| PC TAIL LENGTH: P | | | .070 / 1.78 | | |
| TIN: T | | | OVERALL | | |
| CKTS: | | | 2-36 | | |
| KINKS: | | | NO | | |
| VOIDED CKTS: | | | 2 | | |
| PACKAGING: | | | BULK PK-40873-0041 | | |
| CKTS | MATERIAL NUMBER | ENG NUMBER | CKTS | MATERIAL NUMBER | ENG NUMBER |
| 2 | | | 20 | | |
| 3 | 42375-3604 | | 21 | | |
| 4 | | | 22 | | |
| 5 | | | 23 | | |
| 6 | | | 24 | | |
| 7 | | | 25 | | |
| 8 | | | 26 | | |
| 9 | | | 27 | | |
| 10 | | | 28 | | |
| 11 | | | 29 | | |
| 12 | | | 30 | | |
| 13 | | | 31 | | |
| 14 | | | 32 | | |
| 15 | | | 33 | | |
| 16 | | | 34 | | |
| 17 | | | 35 | | |
| 18 | | | 36 | | |
| 19 | | | | | |

| ENG. NO: A-42375-3638/3658 | | | | | |
|---|---|---|---|---|---|
| HEADER NUMBER: | | | 42312-0036 | | |
| PIN NUMBER: | | | 42663-ABA154 | | |
| PIN LENGTH: L | | | .455 / 11.56 | | |
| MATING LENGTH: M | | | .240 / 6.09 | | |
| GOLD POINT: G | | | N/A | | |
| PC TAIL LENGTH: P | | | .125 / 3.18 | | |
| TIN: T | | | OVERALL | | |
| CKTS: | | | 2-36 | | |
| KINKS: | | | NO | | |
| VOIDED CKTS: | | | 2, 4, 6, 8, 10, 12, 14, 16 | | |
| PACKAGING: | | | BULK PK-40873-0041 | | |
| CKTS | MATERIAL NUMBER | ENG NUMBER | CKTS | MATERIAL NUMBER | ITEM NUMBER |
| 2 | | | 20 | | |
| 3 | | | 21 | | |
| 4 | | | 22 | | |
| 5 | | | 23 | | |
| 6 | | | 24 | | |
| 7 | | | 25 | | |
| 8 | | | 26 | | |
| 9 | | | 27 | | |
| 10 | | | 28 | | |
| 11 | | | 29 | | |
| 12 | | | 30 | | |
| 13 | | | 31 | | |
| 14 | | | 32 | | |
| 15 | | | 33 | | |
| 16 | | | 34 | | |
| 17 | 423753639 | 42375-3639 | 35 | | |
| 18 | | | 36 | | |
| 19 | | | | | |

SYMBOLS

= 0
= 0
= 0
= 0
= 0
= 0
= 0
= 0
= 0

THIS DRAWING CONTAINS INFORMATION THAT IS PROPRIETARY TO MOLEX ELECTRONIC TECHNOLOGIES, LLC AND SHOULD NOT BE USED WITHOUT WRITTEN PERMISSION

DIMENSION UNITS: MM/IN
SCALE: 1:1

GENERAL TOLERANCES (UNLESS SPECIFIED)

| | MM | INCH |
|---|---|---|
| 4 PLACES | ± | ± |
| 3 PLACES | ± | ± 0.01 |
| 2 PLACES | ± 0.25 | ± |
| 1 PLACE | ± 0.38 | ± |
| 0 PLACES | ± | ± |
| ANGULAR TOL | ± 0.5 ° | |

DRAFT WHERE APPLICABLE MUST REMAIN WITHIN DIMENSIONS

CURRENT REV DESC: GOLD LENGTH SPEC CHANGED AS MIN 2.54- MAX 5.54 FOR A-42375-0037/0071

EC NO: 689596
DRWN: SHRUTJ 2021/09/14
CHK'D: SHRUTJ 2021/12/20
APPR: ISHWARG 2021/12/20

INITIAL REVISION:
DRWN: SCHAFER 2003/02/11
APPR: MARGULIS 2004/02/27

THIRD ANGLE PROJECTION | DRAWING: B-SIZE | SERIES: 42375

molex

KK 100 HEADER ASSY
FLAT VERTICAL BREAKAWAY

PRODUCT CUSTOMER DRAWING

| DOCUMENT NUMBER | DOC TYPE | DOC PART | REVISION |
|---|---|---|---|
| SD-42375-001 | PSD | 001 | V |

| MATERIAL NUMBER | CUSTOMER | SHEET NUMBER |
|---|---|---|
| SEE CHART | GENERAL MARKET | 26 OF 35 |

| DOCUMENT STATUS | P1 | RELEASE DATE | 2021/12/20 12:18:33 |
|---|---|---|---|

FORMAT: Eng-lega-master-tb-prod-B
REVISION: D
DATE: 2018/01/18

| ENG. NO: 42375-3659/3693 | | | | | |
|---|---|---|---|---|---|
| HEADER NUMBER: | | | 42312-0036 | | |
| PIN NUMBER: | | | 42663-AXB208 | | |
| PIN LENGTH: L | | | .540 /13.72 | | |
| MATING LENGTH: M | | | .250 / 6.35 | | |
| GOLD POINT: G | | | .140 / 3.56 | | |
| PC TAIL LENGTH: P | | | .200 / 5.08 | | |
| TIN: T | | | .135 / 3.43 | | |
| CKTS: | | | 2-36 | | |
| KINKS: | | | NO | | |
| VOIDED CKTS: | | | NONE | | |
| PACKAGING: | | | BULK PK-40873-0041 | | |
| CKTS | MATERIAL NUMBER | ENG NUMBER | CKTS | MATERIAL NUMBER | ENG NUMBER |
| 2 | 68300-2000 | 42375-3659 | 20 | | 42375-3677 |
| 3 | 68300-2001 | 42375-3660 | 21 | | 42375-3678 |
| 4 | | 42375-3661 | 22 | | 42375-3679 |
| 5 | 68300-2006 | 42375-3662 | 23 | | 42375-3680 |
| 6 | | 42375-3663 | 24 | | 42375-3681 |
| 7 | | 42375-3664 | 25 | | 42375-3682 |
| 8 | | 42375-3665 | 26 | | 42375-3683 |
| 9 | | 42375-3666 | 27 | | 42375-3684 |
| 10 | | 42375-3667 | 28 | | 42375-3685 |
| 11 | | 42375-3668 | 29 | | 42375-3686 |
| 12 | | 42375-3669 | 30 | | 42375-3687 |
| 13 | | 42375-3670 | 31 | | 42375-3688 |
| 14 | | 42375-3671 | 32 | | 42375-3689 |
| 15 | | 42375-3672 | 33 | | 42375-3690 |
| 16 | | 42375-3673 | 34 | | 42375-3691 |
| 17 | | 42375-3674 | 35 | | 42375-3692 |
| 18 | | 42375-3675 | 36 | | 42375-3693 |
| 19 | | 42375-3676 | | | |

| ENG. NO: 42375-3694/3728 | | | | | |
|---|---|---|---|---|---|
| HEADER NUMBER: | | | 42312-0036 | | |
| PIN NUMBER: | | | 42663-AXB208 | | |
| PIN LENGTH: L | | | .540 /13.72 | | |
| MATING LENGTH: M | | | .250 / 6.35 | | |
| GOLD POINT: G | | | .140 / 3.56 | | |
| PC TAIL LENGTH: P | | | .200 / 5.08 | | |
| TIN: T | | | .135 / 3.43 | | |
| CKTS: | | | 2-36 | | |
| KINKS: | | | NO | | |
| VOIDED CKTS: | | | 5 | | |
| PACKAGING: | | | BULK PK-40873-0041 | | |
| CKTS | MATERIAL NUMBER | ENG NUMBER | CKTS | MATERIAL NUMBER | ENG NUMBER |
| 2 | | 42375-3694 | 20 | | 42375-3712 |
| 3 | | 42375-3695 | 21 | | 42375-3713 |
| 4 | | 42375-3696 | 22 | | 42375-3714 |
| 5 | | 42375-3697 | 23 | | 42375-3715 |
| 6 | | 42375-3698 | 24 | | 42375-3716 |
| 7 | | 42375-3699 | 25 | | 42375-3717 |
| 8 | 68300-2002 | 42375-3700 | 26 | | 42375-3718 |
| 9 | | 42375-3701 | 27 | | 42375-3719 |
| 10 | | 42375-3702 | 28 | | 42375-3720 |
| 11 | | 42375-3703 | 29 | | 42375-3721 |
| 12 | | 42375-3704 | 30 | | 42375-3722 |
| 13 | | 42375-3705 | 31 | | 42375-3723 |
| 14 | | 42375-3706 | 32 | | 42375-3724 |
| 15 | | 42375-3707 | 33 | | 42375-3725 |
| 16 | | 42375-3708 | 34 | | 42375-3726 |
| 17 | | 42375-3709 | 35 | | 42375-3727 |
| 18 | | 42375-3710 | 36 | | 42375-3728 |
| 19 | | 42375-3711 | | | |

SYMBOLS

= 0

= 0

= 0

= 0

= 0

= 0

= 0

= 0

= 0

THIS DRAWING CONTAINS INFORMATION THAT IS PROPRIETARY TO MOLEX ELECTRONIC TECHNOLOGIES, LLC AND SHOULD NOT BE USED WITHOUT WRITTEN PERMISSION

| DIMENSION UNITS | SCALE |
|---|---|
| MM/IN | 1:1 |

GENERAL TOLERANCES (UNLESS SPECIFIED)

| | MM | INCH |
|---|---|---|
| 4 PLACES | ± | ± |
| 3 PLACES | ± | ± 0.01 |
| 2 PLACES | ± 0.25 | ± |
| 1 PLACE | ± 0.38 | ± |
| 0 PLACES | ± | ± |
| ANGULAR TOL | ± 0.5 ° | |

DRAFT WHERE APPLICABLE MUST REMAIN WITHIN DIMENSIONS

CURRENT REV DESC: GOLD LENGTH SPEC CHANGED AS MIN 2.54- MAX 5.54 FOR A-42375-0037/0071

EC NO: 689596

DRWN: SHRUTJ 2021/09/14

CHK'D: SHRUTJ 2021/12/20

APPR: ISHWARG 2021/12/20

INITIAL REVISION:

DRWN: SCHAFER 2003/02/11

APPR: MARGULIS 2004/02/27

THIRD ANGLE PROJECTION

DRAWING: B-SIZE

SERIES: 42375

molex

KK 100 HEADER ASSY
FLAT VERTICAL BREAKAWAY

PRODUCT CUSTOMER DRAWING

| DOCUMENT NUMBER | DOC TYPE | DOC PART | REVISION |
|---|---|---|---|
| SD-42375-001 | PSD | 001 | V |

| MATERIAL NUMBER | CUSTOMER | SHEET NUMBER |
|---|---|---|
| SEE CHART | GENERAL MARKET | 27 OF 35 |

| DOCUMENT STATUS | P1 | RELEASE DATE | 2021/12/20 12:18:33 |
|---|---|---|---|

FORMAT: Eng-lega-master-tb-prod-B
REVISION: D
DATE: 2018/01/18

| ENG. NO: 42375-3659/3693 | | | | | |
|---|---|---|---|---|---|
| HEADER NUMBER: | | | 42312-0036 | | |
| PIN NUMBER: | | | 42663-AXB208 | | |
| PIN LENGTH: L | | | .540 /13.72 | | |
| MATING LENGTH: M | | | .250 / 6.35 | | |
| GOLD POINT: G | | | .140 / 3.56 | | |
| PC TAIL LENGTH: P | | | .200 / 5.08 | | |
| TIN: T | | | .135 / 3.43 | | |
| CKTS: | | | 2-36 | | |
| KINKS: | | | NO | | |
| VOIDED CKTS: | | | 5 | | |
| PACKAGING: | | | BULK PK-40873-0041 | | |
| CKTS | MATERIAL NUMBER | ENG NUMBER | CKTS | MATERIAL NUMBER | ENG NUMBER |
| 2 | | 42375-3729 | 20 | | 42375-3747 |
| 3 | | 42375-3730 | 21 | | 42375-3748 |
| 4 | | 42375-3731 | 22 | | 42375-3749 |
| 5 | | 42375-3732 | 23 | | 42375-3750 |
| 6 | | 42375-3733 | 24 | | 42375-3751 |
| 7 | | 42375-3734 | 25 | | 42375-3752 |
| 8 | 68300-2007 | 42375-3735 | 26 | | 42375-3753 |
| 9 | | 42375-3736 | 27 | | 42375-3754 |
| 10 | | 42375-3737 | 28 | | 42375-3755 |
| 11 | | 42375-3738 | 29 | | 42375-3756 |
| 12 | | 42375-3739 | 30 | | 42375-3757 |
| 13 | | 42375-3740 | 31 | | 42375-3758 |
| 14 | | 42375-3741 | 32 | | 42375-3759 |
| 15 | | 42375-3742 | 33 | | 42375-3760 |
| 16 | | 42375-3743 | 34 | | 42375-3761 |
| 17 | | 42375-3744 | 35 | | 42375-3762 |
| 18 | | 42375-3745 | 36 | | 42375-3763 |
| 19 | | 42375-3746 | | | |

| ENG. NO: 42375-3764/3798 | | | |
|---|---|---|---|
| HEADER NUMBER: | | 42312-0036 | |
| PIN NUMBER: | | 42663-ETA154 | |
| PIN LENGTH: L | | .540 /13.72 | |
| MATING LENGTH: M | | .250 / 6.35 | |
| GOLD POINT: G | | .140 / 3.56 | |
| PC TAIL LENGTH: P | | .200 / 5.08 | |
| TIN: T | | .135 / 3.43 | |
| CKTS: | | 2-36 | |
| KINKS: | | NO | |
| VOIDED CKTS: | | 5 | |
| PACKAGING: | | BULK PK-40873-0041 | |
| CKTS | ITEM NUMBER | CKTS | ITEM NUMBER |
| 2 | | 20 | |
| 3 | | 21 | |
| 4 | | 22 | |
| 5 | | 23 | |
| 6 | | 24 | |
| 7 | | 25 | |
| 8 | 68300-2007 | 26 | |
| 9 | | 27 | |
| 10 | | 28 | |
| 11 | | 29 | |
| 12 | | 30 | |
| 13 | | 31 | |
| 14 | | 32 | |
| 15 | | 33 | |
| 16 | | 34 | |
| 17 | | 35 | |
| 18 | | 36 | |
| 19 | | | |

SYMBOLS

= 0
= 0
= 0
= 0
= 0
= 0
= 0
= 0
= 0

THIS DRAWING CONTAINS INFORMATION THAT IS PROPRIETARY TO MOLEX ELECTRONIC TECHNOLOGIES, LLC AND SHOULD NOT BE USED WITHOUT WRITTEN PERMISSION

DIMENSION UNITS: MM/IN
SCALE: 1:1

GENERAL TOLERANCES (UNLESS SPECIFIED)

| | MM | INCH |
|---|---|---|
| 4 PLACES | ± | ± |
| 3 PLACES | ± | ± 0.01 |
| 2 PLACES | ± 0.25 | ± |
| 1 PLACE | ± 0.38 | ± |
| 0 PLACES | ± | ± |
| ANGULAR TOL | ± 0.5 ° | |

DRAFT WHERE APPLICABLE MUST REMAIN WITHIN DIMENSIONS

CURRENT REV DESC: GOLD LENGTH SPEC CHANGED AS MIN 2.54- MAX 5.54 FOR A-42375-0037/0071

EC NO: 689596
DRWN: SHRUTJ 2021/09/14
CHK'D: SHRUTJ 2021/12/20
APPR: ISHWARG 2021/12/20

INITIAL REVISION:
DRWN: SCHAFER 2003/02/11
APPR: MARGULIS 2004/02/27

THIRD ANGLE PROJECTION | DRAWING: B-SIZE | SERIES: 42375

molex

KK 100 HEADER ASSY
FLAT VERTICAL BREAKAWAY

PRODUCT CUSTOMER DRAWING

| DOCUMENT NUMBER | DOC TYPE | DOC PART | REVISION |
|---|---|---|---|
| SD-42375-001 | PSD | 001 | V |

| MATERIAL NUMBER | CUSTOMER | SHEET NUMBER |
|---|---|---|
| SEE CHART | GENERAL MARKET | 28 OF 35 |

| DOCUMENT STATUS | P1 | RELEASE DATE | 2021/12/20 12:18:33 |
|---|---|---|---|

FORMAT: Eng-lega-master-tb-prod-B
REVISION: D
DATE: 2018/01/18

| ENG. NO: 42375-3799/3832 | | | |
|---|---|---|---|
| HEADER NUMBER: | 42312-0036 | | |
| PIN NUMBER: | 42663-ABA154 | | |
| PIN LENGTH: L | .455 / 11.56 | | |
| MATING LENGTH: M | .240 / 6.09 | | |
| GOLD POINT: G | N/A | | |
| PC TAIL LENGTH: P | .125 / 3.18 | | |
| TIN: T | OVERALL | | |
| CKTS: | 3-36 | | |
| KINKS: | NO | | |
| VOIDED CKTS: | 3 | | |
| PACKAGING: | BULK | PK-40873-0041 | |
| CKTS | MATERIAL NUMBER | CKTS | MATERIAL NUMBER |
| 2 | | 20 | |
| 3 | | 21 | |
| 4 | | 22 | |
| 5 | 42375-3801 | 23 | |
| 6 | | 24 | |
| 7 | | 25 | |
| 8 | | 26 | |
| 9 | | 27 | |
| 10 | | 28 | |
| 11 | | 29 | |
| 12 | | 30 | |
| 13 | | 31 | |
| 14 | | 32 | |
| 15 | | 33 | |
| 16 | | 34 | |
| 17 | | 35 | |
| 18 | | 36 | |
| 19 | | | |

| ENG. NO: 42375-3733/3867 | | | |
|---|---|---|---|
| HEADER NUMBER: | 42312-0036 | | |
| PIN NUMBER: | 42663-ABB208 | | |
| PIN LENGTH: L | .455 / 11.56 | | |
| MATING LENGTH: M | .250 / 6.35 | | |
| GOLD POINT: G | .100 / 2.54 | | |
| PC TAIL LENGTH: P | .115 / 2.92 | | |
| TIN: T | .100 / 2.54 | | |
| CKTS: | 2-36 | | |
| KINKS: | NO | | |
| VOIDED CKTS: | NONE | | |
| PACKAGING: | BULK | PK-40873-0041 | |
| CKTS | MATERIAL NUMBER | CKTS | MATERIAL NUMBER |
| 2 | | 20 | |
| 3 | | 21 | |
| 4 | | 22 | |
| 5 | 42375-3836 | 23 | |
| 6 | | 24 | |
| 7 | | 25 | |
| 8 | | 26 | |
| 9 | | 27 | |
| 10 | | 28 | |
| 11 | | 29 | |
| 12 | | 30 | |
| 13 | | 31 | |
| 14 | | 32 | |
| 15 | | 33 | |
| 16 | | 34 | |
| 17 | | 35 | |
| 18 | | 36 | |
| 19 | | | |

| ENG. NO: 42375-3868 / 3902 | | | |
|---|---|---|---|
| HEADER NUMBER: | 42312-0036 | | |
| PIN NUMBER: | 42663-DWA154 | | |
| PIN LENGTH: L | .850 / 21.59 | | |
| MATING LENGTH: M | .640 / 16.26 | | |
| GOLD POINT: G | N/A | | |
| PC TAIL LENGTH: P | .120 / 3.05 | | |
| TIN: T | OVERALL | | |
| CKTS: | 2-36 | | |
| KINKS: | NO | | |
| VOIDED CKTS: | NONE | | |
| PACKAGING: | BULK | PK-40873-0041 | |
| CKTS | ITEM NUMBER | CKTS | ITEM NUMBER |
| 2 | | 20 | |
| 3 | | 21 | |
| 4 | 42375-3870 | 22 | |
| 5 | | 23 | |
| 6 | 42375-3872 | 24 | |
| 7 | | 25 | |
| 8 | | 26 | |
| 9 | | 27 | |
| 10 | | 28 | |
| 11 | | 29 | |
| 12 | | 30 | |
| 13 | | 31 | |
| 14 | | 32 | |
| 15 | | 33 | |
| 16 | | 34 | |
| 17 | | 35 | |
| 18 | | 36 | |
| 19 | | | |

| DOCUMENT STATUS | P1 | RELEASE DATE | 2021/12/20 12:18:33 |
|---|---|---|---|

FORMAT: Eng-lega-master-tb-prod-B
REVISION: D
DATE: 2018/01/18

SYMBOLS
E/A = 0
E/F = 0
E/P = 0
S/V = 0
▼ = 0
E/T = 0
☒ = 0
■ = 0
▽ = 0

THIS DRAWING CONTAINS INFORMATION THAT IS PROPRIETARY TO MOLEX ELECTRONIC TECHNOLOGIES, LLC AND SHOULD NOT BE USED WITHOUT WRITTEN PERMISSION

| DIMENSION UNITS | SCALE |
|---|---|
| MM/IN | 1:1 |

GENERAL TOLERANCES (UNLESS SPECIFIED)

| | MM | INCH |
|---|---|---|
| 4 PLACES | ± | ± |
| 3 PLACES | ± | ± 0.01 |
| 2 PLACES | ± 0.25 | ± |
| 1 PLACE | ± 0.38 | ± |
| 0 PLACES | ± | ± |
| ANGULAR TOL | ± 0.5 ° | |

DRAFT WHERE APPLICABLE MUST REMAIN WITHIN DIMENSIONS

CURRENT REV DESC: GOLD LENGTH SPEC CHANGED AS MIN 2.54- MAX 5.54 FOR A-42375-0037/0071

EC NO: 689596
DRWN: SHRUTJ 2021/09/14
CHK'D: SHRUTJ 2021/12/20
APPR: ISHWARG 2021/12/20

INITIAL REVISION:
DRWN: SCHAFER 2003/02/11
APPR: MARGULIS 2004/02/27

THIRD ANGLE PROJECTION | DRAWING: B-SIZE | SERIES: 42375

molex

KK 100 HEADER ASSY
FLAT VERTICAL BREAKAWAY

PRODUCT CUSTOMER DRAWING

| DOCUMENT NUMBER | DOC TYPE | DOC PART | REVISION |
|---|---|---|---|
| SD-42375-001 | PSD | 001 | V |

| MATERIAL NUMBER | CUSTOMER | SHEET NUMBER |
|---|---|---|
| SEE CHART | GENERAL MARKET | 29 OF 35 |

| ENG. NO: 42375-3903/3932 | | | |
|---|---|---|---|
| HEADER NUMBER: | 42312-0036 | | |
| PIN NUMBER: | 42663-BSA154 | | |
| PIN LENGTH: L | .630 / 16.00 | | |
| MATING LENGTH: M | .421 / 10.69 | | |
| GOLD POINT: G | N/A | | |
| PC TAIL LENGTH: P | .119 / 3.02 | | |
| TIN: T | OVERALL | | |
| CKTS: | 7-36 | | |
| KINKS: | NO | | |
| VOIDED CKTS: | 7 | | |
| PACKAGING: | BULK | PK-40873-0041 | |
| CKTS | MATERIAL NUMBER | CKTS | MATERIAL NUMBER |
| 2 | | 20 | |
| 3 | | 21 | |
| 4 | | 22 | |
| 5 | | 23 | |
| 6 | | 24 | |
| 7 | | 25 | |
| 8 | 42375-3904 | 26 | |
| 9 | | 27 | |
| 10 | | 28 | |
| 11 | | 29 | |
| 12 | | 30 | |
| 13 | | 31 | |
| 14 | | 32 | |
| 15 | | 33 | |
| 16 | | 34 | |
| 17 | | 35 | |
| 18 | | 36 | |
| 19 | | | |

| ENG. NO: 42375-3933/3964 | | | |
|---|---|---|---|
| HEADER NUMBER: | 42312-0036 | | |
| PIN NUMBER: | 42663-BSA154 | | |
| PIN LENGTH: L | .630 / 16.00 | | |
| MATING LENGTH: M | .405/10.29 | | |
| GOLD POINT: G | N/A | | |
| PC TAIL LENGTH: P | .135/3.43 | | |
| TIN: T | OVERALL | | |
| CKTS: | 5-36 | | |
| KINKS: | SMES-42003 | | |
| VOIDED CKTS: | 5 | | |
| PACKAGING: | BULK | PK-40873-0041 | |
| CKTS | MATERIAL NUMBER | CKTS | MATERIAL NUMBER |
| 2 | | 20 | |
| 3 | | 21 | |
| 4 | | 22 | |
| 5 | | 23 | |
| 6 | | 24 | |
| 7 | | 25 | |
| 8 | | 26 | |
| 9 | 42375-3937 | 27 | |
| 10 | | 28 | |
| 11 | | 29 | |
| 12 | | 30 | |
| 13 | | 31 | |
| 14 | | 32 | |
| 15 | | 33 | |
| 16 | | 34 | |
| 17 | | 35 | |
| 18 | | 36 | |
| 19 | | | |

| ENG. NO: 42375-3965/3995 | | | |
|---|---|---|---|
| HEADER NUMBER: | 42312-0036 | | |
| PIN NUMBER: | 42663-BSA154 | | |
| PIN LENGTH: L | .630 / 16.00 | | |
| MATING LENGTH: M | .405/10.29 | | |
| GOLD POINT: G | N/A | | |
| PC TAIL LENGTH: P | .135/3.43 | | |
| TIN: T | OVERALL | | |
| CKTS: | 6-36 | | |
| KINKS: | SMES-42003 | | |
| VOIDED CKTS: | 4, 5, 6 | | |
| PACKAGING: | BULK | PK-40873-0041 | |
| CKTS | MATERIAL NUMBER | CKTS | MATERIAL NUMBER |
| 2 | | 20 | |
| 3 | | 21 | |
| 4 | | 22 | |
| 5 | | 23 | |
| 6 | | 24 | |
| 7 | | 25 | |
| 8 | | 26 | |
| 9 | 42375-3968 | 27 | |
| 10 | | 28 | |
| 11 | | 29 | |
| 12 | | 30 | |
| 13 | | 31 | |
| 14 | | 32 | |
| 15 | | 33 | |
| 16 | | 34 | |
| 17 | | 35 | |
| 18 | | 36 | |
| 19 | | | |

SYMBOLS

= 0
= 0
= 0
= 0
= 0
= 0
= 0
= 0
= 0

THIS DRAWING CONTAINS INFORMATION THAT IS PROPRIETARY TO MOLEX ELECTRONIC TECHNOLOGIES, LLC AND SHOULD NOT BE USED WITHOUT WRITTEN PERMISSION

DIMENSION UNITS: MM/IN
SCALE: 1:1

GENERAL TOLERANCES (UNLESS SPECIFIED)

| | MM | INCH |
|---|---|---|
| 4 PLACES | ± | ± |
| 3 PLACES | ± | ± 0.01 |
| 2 PLACES | ± 0.25 | ± |
| 1 PLACE | ± 0.38 | ± |
| 0 PLACES | ± | ± |
| ANGULAR TOL | ± 0.5 ° | |

DRAFT WHERE APPLICABLE MUST REMAIN WITHIN DIMENSIONS

CURRENT REV DESC: GOLD LENGTH SPEC CHANGED AS MIN 2.54- MAX 5.54 FOR A-42375-0037/0071

EC NO: 689596
DRWN: SHRUTJ 2021/09/14
CHK'D: SHRUTJ 2021/12/20
APPR: ISHWARG 2021/12/20

INITIAL REVISION:
DRWN: SCHAFER 2003/02/11
APPR: MARGULIS 2004/02/27

THIRD ANGLE PROJECTION | DRAWING: B-SIZE | SERIES: 42375

molex

KK 100 HEADER ASSY
FLAT VERTICAL BREAKAWAY

PRODUCT CUSTOMER DRAWING

| DOCUMENT NUMBER | DOC TYPE | DOC PART | REVISION |
|---|---|---|---|
| SD-42375-001 | PSD | 001 | V |

| MATERIAL NUMBER | CUSTOMER | SHEET NUMBER |
|---|---|---|
| SEE CHART | GENERAL MARKET | 30 OF 35 |

| DOCUMENT STATUS | P1 | RELEASE DATE | 2021/12/20 12:18:33 |
|---|---|---|---|

FORMAT: Eng-lega-master-tb-prod-B
REVISION: D
DATE: 2018/01/18

| ENG. NO: A-42375-3996/4030 | | | |
|---|---|---|---|
| HEADER NUMBER: | | 42312-0036 | |
| PIN NUMBER: | | 42663-AXA154 | |
| PIN LENGTH: L | | .540 / 13.72 | |
| MATING LENGTH: M | | .390 / 9.91 | |
| GOLD POINT: G | | N/A | |
| PC TAIL LENGTH: P | | .060 / 1.52 | |
| TIN: T | | OVERALL | |
| CKTS: | | 2-36 | |
| KINKS: | | NO | |
| VOIDED CKTS: | | NONE | |
| PACKAGING: | | BULK PK-40873-0041 | |
| CKTS | ITEM NUMBER | CKTS | ITEM NUMBER |
| 2 | | 20 | |
| 3 | | 21 | |
| 4 | | 22 | |
| 5 | | 23 | |
| 6 | 42375-4000 | 24 | |
| 7 | 42375-4001 | 25 | |
| 8 | | 26 | |
| 9 | | 27 | |
| 10 | | 28 | |
| 11 | | 29 | |
| 12 | | 30 | |
| 13 | | 31 | |
| 14 | | 32 | |
| 15 | | 33 | |
| 16 | | 34 | |
| 17 | | 35 | |
| 18 | | 36 | |
| 19 | | | |

| ENG. NO: 42375-4031/4059 | | | |
|---|---|---|---|
| HEADER NUMBER: | | 42312-0036 | |
| PIN NUMBER: | | 42663-ABA154 | |
| PIN LENGTH: L | | .455 / 11.56 | |
| MATING LENGTH: M | | .240 / 6.09 | |
| GOLD POINT: G | | N/A | |
| PC TAIL LENGTH: P | | .125 / 3.18 | |
| TIN: T | | OVERALL | |
| CKTS: | | 8-36 | |
| KINKS: | | NO | |
| VOIDED CKTS: | | 2, 4, 6, 8 | |
| PACKAGING: | | BULK PK-40873-0041 | |
| CKTS | MATERIAL NUMBER | CKTS | MATERIAL NUMBER |
| 2 | | 20 | |
| 3 | | 21 | |
| 4 | | 22 | |
| 5 | | 23 | |
| 6 | | 24 | |
| 7 | | 25 | |
| 8 | | 26 | |
| 9 | 42375-4032 | 27 | |
| 10 | | 28 | |
| 11 | | 29 | |
| 12 | | 30 | |
| 13 | | 31 | |
| 14 | | 32 | |
| 15 | | 33 | |
| 16 | | 34 | |
| 17 | | 35 | |
| 18 | | 36 | |
| 19 | | | |

| ENG. NO: 42375-4060 / 4094 | | | |
|---|---|---|---|
| HEADER NUMBER: | | 42312-0036 | |
| PIN NUMBER: | | 42663-CGA154 | |
| PIN LENGTH: L | | .690 / 17.53 | |
| MATING LENGTH: M | | .521 / 13.23 | |
| GOLD POINT: G | | N/A | |
| PC TAIL LENGTH: P | | .079 / 2.01 | |
| TIN: T | | OVERALL | |
| CKTS: | | 2-36 | |
| KINKS: | | NO | |
| VOIDED CKTS: | | NONE | |
| PACKAGING: | | BULK PK-40873-0041 | |
| CKTS | MATERIAL NUMBER | CKTS | MATERIAL NUMBER |
| 2 | | 20 | |
| 3 | | 21 | |
| 4 | | 22 | |
| 5 | | 23 | |
| 6 | 42375-4064 | 24 | |
| 7 | | 25 | |
| 8 | | 26 | |
| 9 | | 27 | |
| 10 | | 28 | |
| 11 | | 29 | |
| 12 | | 30 | |
| 13 | | 31 | |
| 14 | | 32 | |
| 15 | | 33 | |
| 16 | | 34 | |
| 17 | | 35 | |
| 18 | | 36 | |
| 19 | | | |

SYMBOLS

= 0
= 0
= 0
= 0
= 0
= 0
= 0
= 0
= 0

THIS DRAWING CONTAINS INFORMATION THAT IS PROPRIETARY TO MOLEX ELECTRONIC TECHNOLOGIES, LLC AND SHOULD NOT BE USED WITHOUT WRITTEN PERMISSION

| DIMENSION UNITS | SCALE |
|---|---|
| MM/IN | 1:1 |

GENERAL TOLERANCES (UNLESS SPECIFIED)

| | MM | INCH |
|---|---|---|
| 4 PLACES | ± | ± |
| 3 PLACES | ± | ± 0.01 |
| 2 PLACES | ± 0.25 | ± |
| 1 PLACE | ± 0.38 | ± |
| 0 PLACES | ± | ± |
| ANGULAR TOL | ± 0.5 ° | |

DRAFT WHERE APPLICABLE MUST REMAIN WITHIN DIMENSIONS

CURRENT REV DESC: GOLD LENGTH SPEC CHANGED AS MIN 2.54- MAX 5.54 FOR A-42375-0037/0071

EC NO: 689596
DRWN: SHRUTJ 2021/09/14
CHK'D: SHRUTJ 2021/12/20
APPR: ISHWARG 2021/12/20

INITIAL REVISION:
DRWN: SCHAFER 2003/02/11
APPR: MARGULIS 2004/02/27

THIRD ANGLE PROJECTION

| DRAWING | SERIES |
|---|---|
| B-SIZE | 42375 |

molex

KK 100 HEADER ASSY
FLAT VERTICAL BREAKAWAY

PRODUCT CUSTOMER DRAWING

| DOCUMENT NUMBER | DOC TYPE | DOC PART | REVISION |
|---|---|---|---|
| SD-42375-001 | PSD | 001 | V |

| MATERIAL NUMBER | CUSTOMER | SHEET NUMBER |
|---|---|---|
| SEE CHART | GENERAL MARKET | 31 OF 35 |

| DOCUMENT STATUS | P1 | RELEASE DATE | 2021/12/20 12:18:33 |
|---|---|---|---|

FORMAT: Eng-lega-master-tb-prod-B
REVISION: D
DATE: 2018/01/18

| ENG. NO: A-42375-4095/4129 | | | |
|---|---|---|---|
| HEADER NUMBER: | | 42312-0036 | |
| PIN NUMBER: | | 42663-DEB228 | |
| PIN LENGTH: L | | .785 / 19.94 | |
| MATING LENGTH: M | | .470 / 11.94 | |
| GOLD POINT: G | | .250 / 6.35 | |
| PC TAIL LENGTH: P | | .225 / 5.72 | |
| TIN: T | | .200 / 5.08 | |
| CKTS: | | 2-36 | |
| KINKS: | | NO | |
| VOIDED CKTS: | | NONE | |
| PACKAGING: | | BULK | PK-40873-0041 |
| CKTS | ITEM NUMBER | CKTS | ITEM NUMBER |
| 2 | | 20 | |
| 3 | | 21 | |
| 4 | | 22 | |
| 5 | | 23 | |
| 6 | | 24 | |
| 7 | | 25 | |
| 8 | | 26 | |
| 9 | | 27 | |
| 10 | 42375-4103 | 28 | |
| 11 | | 29 | |
| 12 | | 30 | |
| 13 | | 31 | |
| 14 | | 32 | |
| 15 | | 33 | |
| 16 | | 34 | |
| 17 | | 35 | |
| 18 | 42375-4111 | 36 | |
| 19 | | | |

| ENG. NO: A-42375-4130/4161 | | | |
|---|---|---|---|
| HEADER NUMBER: | | 42312-0036 | |
| PIN NUMBER: | | 42663-ATA154 | |
| PIN LENGTH: L | | 530/13.46 | |
| MATING LENGTH: M | | .320/8.13 | |
| GOLD POINT: G | | N/A | |
| PC TAIL LENGTH: P | | .120/3.05 | |
| TIN: T | | OVERALL | |
| CKTS: | | 5-36 | |
| KINKS: | | SMES-42003 | |
| VOIDED CKTS: | | 2, 3, 4 | |
| PACKAGING: | | BULK | PK-40873-0041 |
| CKTS | ITEM NUMBER | CKTS | ITEM NUMBER |
| | | 20 | |
| | | 21 | |
| | | 22 | |
| 5 | 42375-4130 | 23 | |
| 6 | | 24 | |
| 7 | | 25 | |
| 8 | | 26 | |
| 9 | | 27 | |
| 10 | | 28 | |
| 11 | | 29 | |
| 12 | | 30 | |
| 13 | | 31 | |
| 14 | | 32 | |
| 15 | | 33 | |
| 16 | | 34 | |
| 17 | | 35 | |
| 18 | | 36 | |
| 19 | | | |

| ENG. NO: 42375-4162/4196 | | | |
|---|---|---|---|
| HEADER NUMBER: | | 42312-0036 | |
| PIN NUMBER: | | 42663-BSC228 | |
| PIN LENGTH: L | | .630/16.00 | |
| MATING LENGTH: M | | .400/10.16 | |
| GOLD POINT: G | | .345/8.76 | |
| PC TAIL LENGTH: P | | 140/3.56 | |
| TIN: T | | .100/2.54 | |
| CKTS: | | 2-36 | |
| KINKS: | | NO | |
| VOIDED CKTS: | | NONE | |
| PACKAGING: | | BULK | PK-40873-0041 |
| CKTS | MATERIAL NUMBER | CKTS | MATERIAL NUMBER |
| 2 | | 20 | |
| 3 | | 21 | |
| 4 | 42375-4164 | 22 | |
| 5 | 42375-4165 | 23 | |
| 6 | | 24 | |
| 7 | | 25 | |
| 8 | | 26 | |
| 9 | | 27 | |
| 10 | 42375-4170 | 28 | |
| 11 | | 29 | |
| 12 | | 30 | |
| 13 | | 31 | |
| 14 | | 32 | |
| 15 | | 33 | |
| 16 | | 34 | |
| 17 | | 35 | |
| 18 | | 36 | |
| 19 | | | |

SYMBOLS
= 0
= 0
= 0
= 0
= 0
= 0
= 0
= 0
= 0

THIS DRAWING CONTAINS INFORMATION THAT IS PROPRIETARY TO MOLEX ELECTRONIC TECHNOLOGIES, LLC AND SHOULD NOT BE USED WITHOUT WRITTEN PERMISSION

DIMENSION UNITS: MM/IN
SCALE: 1:1

GENERAL TOLERANCES (UNLESS SPECIFIED)

| | MM | INCH |
|---|---|---|
| 4 PLACES | ± | ± |
| 3 PLACES | ± | ± 0.01 |
| 2 PLACES | ± 0.25 | ± |
| 1 PLACE | ± 0.38 | ± |
| 0 PLACES | ± | ± |
| ANGULAR TOL | ± 0.5 ° | |

DRAFT WHERE APPLICABLE MUST REMAIN WITHIN DIMENSIONS

CURRENT REV DESC: GOLD LENGTH SPEC CHANGED AS MIN 2.54- MAX 5.54 FOR A-42375-0037/0071

EC NO: 689596
DRWN: SHRUTJ 2021/09/14
CHK'D: SHRUTJ 2021/12/20
APPR: ISHWARG 2021/12/20

INITIAL REVISION:
DRWN: SCHAFER 2003/02/11
APPR: MARGULIS 2004/02/27

THIRD ANGLE PROJECTION | DRAWING: B-SIZE | SERIES: 42375

molex

KK 100 HEADER ASSY
FLAT VERTICAL BREAKAWAY

PRODUCT CUSTOMER DRAWING

| DOCUMENT NUMBER | DOC TYPE | DOC PART | REVISION |
|---|---|---|---|
| SD-42375-001 | PSD | 001 | V |

| MATERIAL NUMBER | CUSTOMER | SHEET NUMBER |
|---|---|---|
| SEE CHART | GENERAL MARKET | 32 OF 35 |

| DOCUMENT STATUS | P1 | RELEASE DATE | 2021/12/20 12:18:33 |
|---|---|---|---|

FORMAT: Eng-lega-master-tb-prod-B
REVISION: D
DATE: 2018/01/18

| ENG. NO: A-42375-1622 | | | |
|---|---|---|---|
| HEADER NUMBER: | 42312-0036 | | |
| PIN NUMBER: | 42663-AYB208 | | |
| PIN LENGTH: L | .545 / 13.84 | | |
| MATING LENGTH: M | .320 / 8.13 | | |
| GOLD POINT: G | .140 / 3.56 | | |
| PC TAIL LENGTH: P | .135 / 3.43 | | |
| TIN: T | .135 / 3.43 | | |
| CKTS: | 2-36 | | |
| KINKS: | SMES-42003 | | |
| VOIDED CKTS: | 3 | | |
| PACKAGING: | BULK | PK-40873-0041 | |
| CKTS | MATERIAL NUMBER | CKTS | MATERIAL NUMBER |
| 2 | | 20 | |
| 3 | | 21 | |
| 4 | | 22 | |
| 5 | | 23 | |
| 6 | | 24 | |
| 7 | | 25 | |
| 8 | | 26 | |
| 9 | 42375-1622 | 27 | |
| 10 | | 28 | |
| 11 | | 29 | |
| 12 | | 30 | |
| 13 | | 31 | |
| 14 | | 32 | |
| 15 | | 33 | |
| 16 | | 34 | |
| 17 | | 35 | |
| 18 | | 36 | |
| 19 | | | |

| ENG. NO: A-42375-4199 | | | |
|---|---|---|---|
| HEADER NUMBER: | 42312-0036 | | |
| PIN NUMBER: | 42663-ARB228 | | |
| PIN LENGTH: L | .520 / 13.21 | | |
| MATING LENGTH: M | .230 / 5.84 | | |
| GOLD POINT: G | .140 / 3.56 | | |
| PC TAIL LENGTH: P | .200 / 5.08 | | |
| TIN: T | .135 / 3.43 | | |
| CKTS: | 2-36 | | |
| KINKS: | NO | | |
| VOIDED CKTS: | NONE | | |
| PACKAGING: | BULK | PK-40873-0041 | |
| CKTS | MATERIAL NUMBER | CKTS | MATERIAL NUMBER |
| 2 | 42375-4199 | 20 | |
| 3 | | 21 | |
| 4 | | 22 | |
| 5 | | 23 | |
| 6 | | 24 | |
| 7 | | 25 | |
| 8 | | 26 | |
| 9 | | 27 | |
| 10 | | 28 | |
| 11 | | 29 | |
| 12 | | 30 | |
| 13 | | 31 | |
| 14 | | 32 | |
| 15 | | 33 | |
| 16 | | 34 | |
| 17 | | 35 | |
| 18 | | 36 | |
| 19 | | | |

| ENG. NO: A-42375-4200 | | | |
|---|---|---|---|
| HEADER NUMBER: | 42312-0036 | | |
| PIN NUMBER: | 42663-ADB208 | | |
| PIN LENGTH: L | .465 / 11.81 | | |
| MATING LENGTH: M | .240 / 6.09 | | |
| GOLD POINT: G | .100 / 2.54 | | |
| PC TAIL LENGTH: P | .135 / 3.43 | | |
| TIN: T | .100 / 2.54 | | |
| CKTS: | 2-36 | | |
| KINKS: | SMES-42003 | | |
| VOIDED CKTS: | 3, 4 | | |
| PACKAGING: | BULK | PK-40873-0041 | |
| CKTS | MATERIAL NUMBER | CKTS | MATERIAL NUMBER |
| 2 | | 20 | |
| 3 | | 21 | |
| 4 | | 22 | |
| 5 | 42375-4200 | 23 | |
| 6 | | 24 | |
| 7 | | 25 | |
| 8 | | 26 | |
| 9 | | 27 | |
| 10 | | 28 | |
| 11 | | 29 | |
| 12 | | 30 | |
| 13 | | 31 | |
| 14 | | 32 | |
| 15 | | 33 | |
| 16 | | 34 | |
| 17 | | 35 | |
| 18 | | 36 | |
| 19 | | | |

SYMBOLS

= 0
= 0
= 0
= 0
= 0
= 0
= 0
= 0
= 0

THIS DRAWING CONTAINS INFORMATION THAT IS PROPRIETARY TO MOLEX ELECTRONIC TECHNOLOGIES, LLC AND SHOULD NOT BE USED WITHOUT WRITTEN PERMISSION

DIMENSION UNITS: MM/IN
SCALE: 1:1

GENERAL TOLERANCES (UNLESS SPECIFIED)

| | MM | INCH |
|---|---|---|
| 4 PLACES | ± | ± |
| 3 PLACES | ± | ± 0.01 |
| 2 PLACES | ± 0.25 | ± |
| 1 PLACE | ± 0.38 | ± |
| 0 PLACES | ± | ± |
| ANGULAR TOL | ± 0.5 ° | |

DRAFT WHERE APPLICABLE MUST REMAIN WITHIN DIMENSIONS

CURRENT REV DESC: GOLD LENGTH SPEC CHANGED AS MIN 2.54- MAX 5.54 FOR A-42375-0037/0071

EC NO: 689596
DRWN: SHRUTJ 2021/09/14
CHK'D: SHRUTJ 2021/12/20
APPR: ISHWARG 2021/12/20

INITIAL REVISION:
DRWN: SCHAFER 2003/02/11
APPR: MARGULIS 2004/02/27

THIRD ANGLE PROJECTION | DRAWING: B-SIZE | SERIES: 42375

molex

KK 100 HEADER ASSY
FLAT VERTICAL BREAKAWAY

PRODUCT CUSTOMER DRAWING

| DOCUMENT NUMBER | DOC TYPE | DOC PART | REVISION |
|---|---|---|---|
| SD-42375-001 | PSD | 001 | V |

| MATERIAL NUMBER | CUSTOMER | SHEET NUMBER |
|---|---|---|
| SEE CHART | GENERAL MARKET | 33 OF 35 |

| DOCUMENT STATUS | P1 | RELEASE DATE | 2021/12/20 12:18:33 |
|---|---|---|---|

FORMAT: Eng-lega-master-tb-prod-B
REVISION: D
DATE: 2018/01/18

| ENG. NO: 42375-4236 | | | |
|---|---|---|---|
| HEADER NUMBER: | 42312-0036 | | |
| PIN NUMBER: | 42663-CCA118 | | |
| PIN LENGTH: L | .670 / 17.02 | | |
| MATING LENGTH: M | .440 / 11.18 | | |
| GOLD POINT: G | NA | | |
| PC TAIL LENGTH: P | .140 / 3.56 | | |
| TIN: T | OVERALL | | |
| CKTS: | 2-36 | | |
| KINKS: | SMES-42003 | | |
| VOIDED CKTS: | NONE | | |
| PACKAGING: | BULK PK-40873-0041 | | |
| CKTS | MATERIAL NUMBER | CKTS | MATERIAL NUMBER |
| 2 | | 20 | |
| 3 | | 21 | |
| 4 | | 22 | |
| 5 | | 23 | |
| 6 | 42375-4236 | 24 | |
| 7 | | 25 | |
| 8 | | 26 | |
| 9 | | 27 | |
| 10 | | 28 | |
| 11 | | 29 | |
| 12 | | 30 | |
| 13 | | 31 | |
| 14 | | 32 | |
| 15 | | 33 | |
| 16 | | 34 | |
| 17 | | 35 | |
| 18 | | 36 | |
| 19 | | | |

| ENG. NO: 42375-4305 | | | |
|---|---|---|---|
| HEADER NUMBER: | 42312-0036 | | |
| PIN NUMBER: | 42663-BDA154 | | |
| PIN LENGTH: L | .570 / 14.48 | | |
| MATING LENGTH: M | .339 / 8.61 | | |
| GOLD POINT: G | N/A | | |
| PC TAIL LENGTH: P | .140 / 3.56 | | |
| TIN: T | OVERALL | | |
| CKTS: | 2-36 | | |
| KINKS: | NO | | |
| VOIDED CKTS: | NONE | | |
| PACKAGING: | BULK PK-40873-0041 | | |
| CKTS | MATERIAL NUMBER | CKTS | MATERIAL NUMBER |
| 2 | | 20 | |
| 3 | | 21 | |
| 4 | | 22 | |
| 5 | 42375-4305 | 23 | |
| 6 | | 24 | |
| 7 | | 25 | |
| 8 | | 26 | |
| 9 | | 27 | |
| 10 | | 28 | |
| 11 | | 29 | |
| 12 | | 30 | |
| 13 | | 31 | |
| 14 | | 32 | |
| 15 | | 33 | |
| 16 | | 34 | |
| 17 | | 35 | |
| 18 | | 36 | |
| 19 | | | |

| ENG. NO: 42375-4338/4341 | | | |
|---|---|---|---|
| HEADER NUMBER: | 42312-0036 | | |
| PIN NUMBER: | 42663-BGA154 | | |
| PIN LENGTH: L | .585 / 14.86 | | |
| MATING LENGTH: M | .398 / 10.11 | | |
| GOLD POINT: G | N/A | | |
| PC TAIL LENGTH: P | .097 / 2.46 | | |
| TIN: T | OVERALL | | |
| CKTS: | 2-36 | | |
| KINKS: | NO | | |
| VOIDED CKTS: | NONE | | |
| PACKAGING: | BULK PK-40873-0041 | | |
| CKTS | MATERIAL NUMBER | CKTS | MATERIAL NUMBER |
| 2 | | 20 | |
| 3 | 42375-4338 | 21 | |
| 4 | | 22 | |
| 5 | | 23 | |
| 6 | 42375-4341 | 24 | |
| 7 | | 25 | |
| 8 | | 26 | |
| 9 | | 27 | |
| 10 | | 28 | |
| 11 | | 29 | |
| 12 | | 30 | |
| 13 | | 31 | |
| 14 | | 32 | |
| 15 | | 33 | |
| 16 | | 34 | |
| 17 | | 35 | |
| 18 | | 36 | |
| 19 | | | |

| DOCUMENT STATUS | P1 | RELEASE DATE | 2021/12/20 12:18:33 |
|---|---|---|---|

FORMAT: Eng-lega-master-tb-prod-B
REVISION: D
DATE: 2018/01/18

SYMBOLS
E = 0
E = 0
E = 0
E = 0
= 0
E = 0
= 0
= 0
= 0

THIS DRAWING CONTAINS INFORMATION THAT IS PROPRIETARY TO MOLEX ELECTRONIC TECHNOLOGIES, LLC AND SHOULD NOT BE USED WITHOUT WRITTEN PERMISSION

| DIMENSION UNITS | SCALE |
|---|---|
| MM/IN | 1:1 |

GENERAL TOLERANCES (UNLESS SPECIFIED)

| | MM | INCH |
|---|---|---|
| 4 PLACES | ± | ± |
| 3 PLACES | ± | ± 0.01 |
| 2 PLACES | ± 0.25 | ± |
| 1 PLACE | ± 0.38 | ± |
| 0 PLACES | ± | ± |
| ANGULAR TOL | ± 0.5 ° | |

DRAFT WHERE APPLICABLE MUST REMAIN WITHIN DIMENSIONS

CURRENT REV DESC: GOLD LENGTH SPEC CHANGED AS MIN 2.54- MAX 5.54 FOR A-42375-0037/0071

EC NO: 689596
DRWN: SHRUTJ 2021/09/14
CHK'D: SHRUTJ 2021/12/20
APPR: ISHWARG 2021/12/20

INITIAL REVISION:
DRWN: SCHAFER 2003/02/11
APPR: MARGULIS 2004/02/27

molex

KK 100 HEADER ASSY
FLAT VERTICAL BREAKAWAY

PRODUCT CUSTOMER DRAWING

| DOCUMENT NUMBER | DOC TYPE | DOC PART | REVISION |
|---|---|---|---|
| SD-42375-001 | PSD | 001 | V |

| THIRD ANGLE PROJECTION | DRAWING | SERIES | MATERIAL NUMBER | CUSTOMER | SHEET NUMBER |
|---|---|---|---|---|---|
| | B-SIZE | 42375 | SEE CHART | GENERAL MARKET | 34 OF 35 |

| ENG. NO: 42375-4413 | | | |
|---|---|---|---|
| HEADER NUMBER: | 42312-0036 | | |
| PIN NUMBER: | 42663-ABB208 | | |
| PIN LENGTH: L | .455 / 11.56 | | |
| MATING LENGTH: M | .240 / 6.09 | | |
| GOLD POINT: G | .100 / 2.54 | | |
| PC TAIL LENGTH: P | .125 / 3.18 | | |
| TIN: T | .100 / 2.54 | | |
| CKTS: | 6-36 | | |
| KINKS: | NO | | |
| VOIDED CKTS: | 2, 4, 6 | | |
| PACKAGING: | BULK | PK-40873-0041 | |
| CKTS | MATERIAL NUMBER | CKTS | MATERIAL NUMBER |
| 2 | | 20 | |
| 3 | | 21 | |
| 4 | | 22 | |
| 5 | | 23 | |
| 6 | | 24 | |
| 7 | 42375-4413 | 25 | |
| 8 | | 26 | |
| 9 | | 27 | |
| 10 | | 28 | |
| 11 | | 29 | |
| 12 | | 30 | |
| 13 | | 31 | |
| 14 | | 32 | |
| 15 | | 33 | |
| 16 | | 34 | |
| 17 | | 35 | |
| 18 | | 36 | |
| 19 | | | |

| ENG. NO: 42375-4445 | | | |
|---|---|---|---|
| HEADER NUMBER: | 42312-0036 | | |
| PIN NUMBER: | 42663-0364 | | |
| PLATING: | 228 | | |
| PIN LENGTH: L | .590 / 14.99 | | |
| MATING LENGTH: M | .380 / 9.65 | | |
| GOLD POINT: G | .200 / 5.08 | | |
| PC TAIL LENGTH: P | .120 / 3.05 | | |
| TIN: T | .135 / 3.43 | | |
| CKTS: | 2-36 | | |
| KINKS: | NO | | |
| VOIDED CKTS: | NONE | | |
| PACKAGING: | BULK | PK-40873-0041 | |
| CKTS | MATERIAL NUMBER | CKTS | MATERIAL NUMBER |
| 2 | | 20 | |
| 3 | | 21 | |
| 4 | 42375-4445 | 22 | |
| 5 | | 23 | |
| 6 | | 24 | |
| 7 | | 25 | |
| 8 | | 26 | |
| 9 | | 27 | |
| 10 | | 28 | |
| 11 | | 29 | |
| 12 | | 30 | |
| 13 | | 31 | |
| 14 | | 32 | |
| 15 | | 33 | |
| 16 | | 34 | |
| 17 | | 35 | |
| 18 | | 36 | |
| 19 | | | |

| ENG. NO: 42375-4549 | | | |
|---|---|---|---|
| HEADER NUMBER: | 42312-0036 | | |
| PIN NUMBER: | 42663-ABB208 | | |
| PLATING: | 208 | | |
| PIN LENGTH: L | .455 / 11.56 | | |
| MATING LENGTH: M | .240 / 6.09 | | |
| GOLD POINT: G | .100 / 2.54 | | |
| PC TAIL LENGTH: P | .125 / 3.18 | | |
| TIN: T | .100 / 2.54 | | |
| CKTS: | 2-36 | | |
| KINKS: | NO | | |
| VOIDED CKTS: | NONE | | |
| PACKAGING: | TAPE AND REEL W/O CAP 423751000-PK | | |
| CKTS | MATERIAL NUMBER | CKTS | MATERIAL NUMBER |
| 2 | 22-28-4029 | 20 | |
| 3 | | 21 | |
| 4 | | 22 | |
| 5 | | 23 | |
| 6 | | 24 | |
| 7 | | 25 | |
| 8 | | 26 | |
| 9 | | 27 | |
| 10 | | 28 | |
| 11 | | 29 | |
| 12 | | 30 | |
| 13 | | 31 | |
| 14 | | 32 | |
| 15 | | 33 | |
| 16 | | 34 | |
| 17 | | 35 | |
| 18 | | 36 | |
| 19 | | | |

SYMBOLS

= 0

= 0

= 0

= 0

= 0

= 0

= 0

= 0

= 0

THIS DRAWING CONTAINS INFORMATION THAT IS PROPRIETARY TO MOLEX ELECTRONIC TECHNOLOGIES, LLC AND SHOULD NOT BE USED WITHOUT WRITTEN PERMISSION

| DIMENSION UNITS | SCALE |
|---|---|
| MM/IN | 1:1 |

GENERAL TOLERANCES (UNLESS SPECIFIED)

| | MM | INCH |
|---|---|---|
| 4 PLACES | ± | ± |
| 3 PLACES | ± | ± 0.01 |
| 2 PLACES | ± 0.25 | ± |
| 1 PLACE | ± 0.38 | ± |
| 0 PLACES | ± | ± |
| ANGULAR TOL | ± 0.5 ° | |

DRAFT WHERE APPLICABLE MUST REMAIN WITHIN DIMENSIONS

CURRENT REV DESC: GOLD LENGTH SPEC CHANGED AS MIN 2.54- MAX 5.54 FOR A-42375-0037/0071

EC NO: 689596

DRWN: SHRUTJ 2021/09/14

CHK'D: SHRUTJ 2021/12/20

APPR: ISHWARG 2021/12/20

INITIAL REVISION:

DRWN: SCHAFER 2003/02/11

APPR: MARGULIS 2004/02/27

THIRD ANGLE PROJECTION

DRAWING: B-SIZE

SERIES: 42375

molex

KK 100 HEADER ASSY
FLAT VERTICAL BREAKAWAY

PRODUCT CUSTOMER DRAWING

| DOCUMENT NUMBER | DOC TYPE | DOC PART | REVISION |
|---|---|---|---|
| SD-42375-001 | PSD | 001 | V |

| MATERIAL NUMBER | CUSTOMER | SHEET NUMBER |
|---|---|---|
| SEE CHART | GENERAL MARKET | 35 OF 35 |

| DOCUMENT STATUS | P1 | RELEASE DATE | 2021/12/20 12:18:33 |
|---|---|---|---|

FORMAT: Eng-tega-master-tb-prod-B
REVISION: D
DATE: 2018/01/18

| ENG. NO: A-42375-0002/0036 | |
|---|---|
| HEADER NUMBER: | 42312-0036 |
| PIN NUMBER: | 42663-ABA154 |
| PIN LENGTH: L | .455 / 11.56 |
| MATING LENGTH: M | .240 / 6.09 |
| GOLD POINT: G | N/A |
| PC TAIL LENGTH: P | .125 / 3.18 |
| TIN: T | OVERALL |
| CKTS: | 2-36 |
| KINKS: | NO |
| VOIDED CKTS: | NONE |
| PACKAGING: | BULK PK-40873-0041 |

| CKTS | MATERIAL NUMBER | ENG NUMBER | CKTS | MATERIAL NUMBER | ENG NUMBER |
|---|---|---|---|---|---|
| 02 | 22-28-4020 | A-42375-0002 | 20 | 22-28-4200 | A-42375-0020 |
| 03 | 22-28-4030 | A-42375-0003 | 21 | 22-28-4210 | A-42375-0021 |
| 04 | 22-28-4040 | A-42375-0004 | 22 | 22-28-4220 | A-42375-0022 |
| 05 | 22-28-4050 | A-42375-0005 | 23 | 22-28-4230 | A-42375-0023 |
| 06 | 22-28-4060 | A-42375-0006 | 24 | 22-28-4240 | A-42375-0024 |
| 07 | 22-28-4070 | A-42375-0007 | 25 | 22-28-4250 | A-42375-0025 |
| 08 | 22-28-4080 | A-42375-0008 | 26 | 22-28-4260 | A-42375-0026 |
| 09 | 22-28-4090 | A-42375-0009 | 27 | 22-28-4270 | A-42375-0027 |
| 10 | 22-28-4100 | A-42375-0010 | 28 | 22-28-4280 | A-42375-0028 |
| 11 | 22-28-4110 | A-42375-0011 | 29 | 22-28-4290 | A-42375-0029 |
| 12 | 22-28-4120 | A-42375-0012 | 30 | 22-28-4300 | A-42375-0030 |
| 13 | 22-28-4130 | A-42375-0013 | 31 | 22-28-4310 | A-42375-0031 |
| 14 | 22-28-4140 | A-42375-0014 | 32 | 22-28-4320 | A-42375-0032 |
| 15 | 22-28-4150 | A-42375-0015 | 33 | 22-28-4330 | A-42375-0033 |
| 16 | 22-28-4160 | A-42375-0016 | 34 | 22-28-4340 | A-42375-0034 |
| 17 | 22-28-4170 | A-42375-0017 | 35 | 22-28-4350 | A-42375-0035 |
| 18 | 22-28-4180 | A-42375-0018 | 36 | 22-28-4360 | A-42375-0036 |
| 19 | 22-28-4190 | A-42375-0019 | | | |

| ENG. NO: A-42375-0037/0071 | |
|---|---|
| HEADER NUMBER: | 42312-0036 |
| PIN NUMBER: | 42663-ABB208 |
| PIN LENGTH: L | .455 / 11.56 |
| MATING LENGTH: M | .240 / 6.09 |
| GOLD POINT: G | .100 / 2.54 Min-0.218/5.54 Max |
| PC TAIL LENGTH: P | .125 / 3.18 |
| TIN: T | .100 / 2.54 |
| CKTS: | 2-36 |
| KINKS: | NO |
| VOIDED CKTS: | NONE |
| PACKAGING: | BULK PK-40873-0041 |

| CKTS | MATERIAL NUMBER | ENG NUMBER | CKTS | MATERIAL NUMBER | ENG NUMBER |
|---|---|---|---|---|---|
| 02 | 22-28-4023 | A-42375-0037 | 20 | 22-28-4203 | A-42375-0055 |
| 03 | 22-28-4033 | A-42375-0038 | 21 | 22-28-4213 | A-42375-0056 |
| 04 | 22-28-4043 | A-42375-0039 | 22 | 22-28-4223 | A-42375-0057 |
| 05 | 22-28-4053 | A-42375-0040 | 23 | 22-28-4233 | A-42375-0058 |
| 06 | 22-28-4063 | A-42375-0041 | 24 | 22-28-4243 | A-42375-0059 |
| 07 | 22-28-4073 | A-42375-0042 | 25 | 22-28-4253 | A-42375-0060 |
| 08 | 22-28-4083 | A-42375-0043 | 26 | 22-28-4263 | A-42375-0061 |
| 09 | 22-28-4093 | A-42375-0044 | 27 | 22-28-4273 | A-42375-0062 |
| 10 | 22-28-4103 | A-42375-0045 | 28 | 22-28-4283 | A-42375-0063 |
| 11 | 22-28-4113 | A-42375-0046 | 29 | 22-28-4293 | A-42375-0064 |
| 12 | 22-28-4123 | A-42375-0047 | 30 | 22-28-4303 | A-42375-0065 |
| 13 | 22-28-4133 | A-42375-0048 | 31 | 22-28-4313 | A-42375-0066 |
| 14 | 22-28-4143 | A-42375-0049 | 32 | 22-28-4323 | A-42375-0067 |
| 15 | 22-28-4153 | A-42375-0050 | 33 | 22-28-4333 | A-42375-0068 |
| 16 | 22-28-4163 | A-42375-0051 | 34 | 22-28-4343 | A-42375-0069 |
| 17 | 22-28-4173 | A-42375-0052 | 35 | 22-28-4353 | A-42375-0070 |
| 18 | 22-28-4183 | A-42375-0053 | 36 | 22-28-4363 | A-42375-0071 |
| 19 | 22-28-4193 | A-42375-0054 | | | |

| REV: | ECR/ECN INFORMATION: | TITLE: | SHEET No. |
|---|---|---|---|
| **U** | EC No.: **UCP2017-2793**<br>DATE: **12/20/2021** | **KK 100 HEADER ASSY<br>FLAT VERTICAL<br>BREAKAWAY** | **- 2 -** |

| DOCUMENT NUMBER: | CREATED / REVISED BY: | CHECKED BY: | APPROVED BY: |
|---|---|---|---|
| **SD- 42375-001** | **SS06** | **ISHWARG** | **ISHWARG** |

| ENG. NO: A-42375-0072/0106 | |
|---|---|
| HEADER NUMBER: | 42312-0036 |
| PIN NUMBER: | 42663-ABB228 |
| PIN LENGTH: L | .455 / 11.56 |
| MATING LENGTH: M | .240 / 6.09 |
| GOLD POINT: G | .100 / 2.54 |
| PC TAIL LENGTH: P | .125 / 3.18 |
| TIN: T | .100 / 2.54 |
| CKTS: | 2-36 |
| KINKS: | NO |
| VOIDED CKTS: | NONE |
| PACKAGING: | BULK PK-40873-0041 |

| CKTS | MATERIAL NUMBER | ENG NUMBER | CKTS | MATERIAL NUMBER | ENG NUMBER |
|---|---|---|---|---|---|
| 02 | 22-28-4026 | A-42375-0072 | 20 | 22-28-4206 | A-42375-0090 |
| 03 | 22-28-4036 | A-42375-0073 | 21 | 22-28-4216 | A-42375-0091 |
| 04 | 22-28-4046 | A-42375-0074 | 22 | 22-28-4226 | A-42375-0092 |
| 05 | 22-28-4056 | A-42375-0075 | 23 | 22-28-4236 | A-42375-0093 |
| 06 | 22-28-4066 | A-42375-0076 | 24 | 22-28-4246 | A-42375-0094 |
| 07 | 22-28-4076 | A-42375-0077 | 25 | 22-28-4256 | A-42375-0095 |
| 08 | 22-28-4086 | A-42375-0078 | 26 | 22-28-4266 | A-42375-0096 |
| 09 | 22-28-4096 | A-42375-0079 | 27 | 22-28-4276 | A-42375-0097 |
| 10 | 22-28-4106 | A-42375-0080 | 28 | 22-28-4286 | A-42375-0098 |
| 11 | 22-28-4116 | A-42375-0081 | 29 | 22-28-4296 | A-42375-0099 |
| 12 | 22-28-4126 | A-42375-0082 | 30 | 22-28-4306 | A-42375-0100 |
| 13 | 22-28-4136 | A-42375-0083 | 31 | 22-28-4316 | A-42375-0101 |
| 14 | 22-28-4146 | A-42375-0084 | 32 | 22-28-4326 | A-42375-0102 |
| 15 | 22-28-4156 | A-42375-0085 | 33 | 22-28-4336 | A-42375-0103 |
| 16 | 22-28-4166 | A-42375-0086 | 34 | 22-28-4346 | A-42375-0104 |
| 17 | 22-28-4176 | A-42375-0087 | 35 | 22-28-4356 | A-42375-0105 |
| 18 | 22-28-4186 | A-42375-0088 | 36 | 22-28-4366 | A-42375-0106 |
| 19 | 22-28-4196 | A-42375-0089 | | | |

| ENG. NO: A-42375-0107/0141 | |
|---|---|
| HEADER NUMBER: | 42312-0036 |
| PIN NUMBER: | 42663-ATA154 |
| PIN LENGTH: L | .530 / 13.46 |
| MATING LENGTH: M | .320 / 8.13 |
| GOLD POINT: G | N/A |
| PC TAIL LENGTH: P | .120 / 3.05 |
| TIN: T | OVERALL |
| CKTS: | 2-36 |
| KINKS: | NO |
| VOIDED CKTS: | NONE |
| PACKAGING: | BULK PK-40873-0041 |

| CKTS | MATERIAL NUMBER | ENG NUMBER | CKTS | MATERIAL NUMBER | ENG NUMBER |
|---|---|---|---|---|---|
| 02 | 22-28-4021 | A-42375-0107 | 20 | 22-28-4201 | A-42375-0125 |
| 03 | 22-28-4031 | A-42375-0108 | 21 | 22-28-4211 | A-42375-0126 |
| 04 | 22-28-4041 | A-42375-0109 | 22 | 22-28-4221 | A-42375-0127 |
| 05 | 22-28-4051 | A-42375-0110 | 23 | 22-28-4231 | A-42375-0128 |
| 06 | 22-28-4061 | A-42375-0111 | 24 | 22-28-4241 | A-42375-0129 |
| 07 | 22-28-4071 | A-42375-0112 | 25 | 22-28-4251 | A-42375-0130 |
| 08 | 22-28-4081 | A-42375-0113 | 26 | 22-28-4261 | A-42375-0131 |
| 09 | 22-28-4091 | A-42375-0114 | 27 | 22-28-4271 | A-42375-0132 |
| 10 | 22-28-4101 | A-42375-0115 | 28 | 22-28-4281 | A-42375-0133 |
| 11 | 22-28-4111 | A-42375-0116 | 29 | 22-28-4291 | A-42375-0134 |
| 12 | 22-28-4121 | A-42375-0117 | 30 | 22-28-4301 | A-42375-0135 |
| 13 | 22-28-4131 | A-42375-0118 | 31 | 22-28-4311 | A-42375-0136 |
| 14 | 22-28-4141 | A-42375-0119 | 32 | 22-28-4321 | A-42375-0137 |
| 15 | 22-28-4151 | A-42375-0120 | 33 | 22-28-4331 | A-42375-0138 |
| 16 | 22-28-4161 | A-42375-0121 | 34 | 22-28-4341 | A-42375-0139 |
| 17 | 22-28-4171 | A-42375-0122 | 35 | 22-28-4351 | A-42375-0140 |
| 18 | 22-28-4181 | A-42375-0123 | 36 | 22-28-4361 | A-42375-0141 |
| 19 | 22-28-4191 | A-42375-0124 | | | |

| REV: | ECR/ECN INFORMATION: | TITLE: | SHEET No. |
|---|---|---|---|
| **U** | EC No.: **UCP2017-2793**<br>DATE: **12/20/2021** | **KK 100 HEADER ASSY<br>FLAT VERTICAL<br>BREAKAWAY** | **- 3 -** |

| DOCUMENT NUMBER: | CREATED / REVISED BY: | CHECKED BY: | APPROVED BY: |
|---|---|---|---|
| **SD- 42375-001** | **SS06** | **ISHWARG** | **ISHWARG** |

| ENG. NO: A-42375-0142/0176 | |
|---|---|
| HEADER NUMBER: | 42312-0036 |
| PIN NUMBER: | 42663-ATB208 |
| PIN LENGTH: L | .530 / 13.46 |
| MATING LENGTH: M | .320 / 8.13 |
| GOLD POINT: G | .140 / 3.56 |
| PC TAIL LENGTH: P | .120 / 3.05 |
| TIN: T | .135 / 3.43 |
| CKTS: | 2-36 |
| KINKS: | NO |
| VOIDED CKTS: | NONE |
| PACKAGING: | BULK PK-40873-0041 |

| CKTS | MATERIAL NUMBER | ENG NUMBER | CKTS | MATERIAL NUMBER | ENG NUMBER |
|---|---|---|---|---|---|
| 02 | 22-28-4024 | A-42375-0142 | 20 | 22-28-4204 | A-42375-0160 |
| 03 | 22-28-4034 | A-42375-0143 | 21 | 22-28-4214 | A-42375-0161 |
| 04 | 22-28-4044 | A-42375-0144 | 22 | 22-28-4224 | A-42375-0162 |
| 05 | 22-28-4054 | A-42375-0145 | 23 | 22-28-4234 | A-42375-0163 |
| 06 | 22-28-4064 | A-42375-0146 | 24 | 22-28-4244 | A-42375-0164 |
| 07 | 22-28-4074 | A-42375-0147 | 25 | 22-28-4254 | A-42375-0165 |
| 08 | 22-28-4084 | A-42375-0148 | 26 | 22-28-4264 | A-42375-0166 |
| 09 | 22-28-4094 | A-42375-0149 | 27 | 22-28-4274 | A-42375-0167 |
| 10 | 22-28-4104 | A-42375-0150 | 28 | 22-28-4284 | A-42375-0168 |
| 11 | 22-28-4114 | A-42375-0151 | 29 | 22-28-4294 | A-42375-0169 |
| 12 | 22-28-4124 | A-42375-0152 | 30 | 22-28-4304 | A-42375-0170 |
| 13 | 22-28-4134 | A-42375-0153 | 31 | 22-28-4314 | A-42375-0171 |
| 14 | 22-28-4144 | A-42375-0154 | 32 | 22-28-4324 | A-42375-0172 |
| 15 | 22-28-4154 | A-42375-0155 | 33 | 22-28-4334 | A-42375-0173 |
| 16 | 22-28-4164 | A-42375-0156 | 34 | 22-28-4344 | A-42375-0174 |
| 17 | 22-28-4174 | A-42375-0157 | 35 | 22-28-4354 | A-42375-0175 |
| 18 | 22-28-4184 | A-42375-0158 | 36 | 22-28-4364 | A-42375-0176 |
| 19 | 22-28-4194 | A-42375-0159 | | | |

| ENG. NO: A-42375-0177/0211 | |
|---|---|
| HEADER NUMBER: | 42312-0036 |
| PIN NUMBER: | 42663-ATB228 |
| PIN LENGTH: L | .530 / 13.46 |
| MATING LENGTH: M | .320 / 8.13 |
| GOLD POINT: G | .140 / 3.56 |
| PC TAIL LENGTH: P | .120 / 3.05 |
| TIN: T | .135 / 3.43 |
| CKTS: | 2-36 |
| KINKS: | NO |
| VOIDED CKTS: | NONE |
| PACKAGING: | BULK PK-40873-0041 |

| CKTS | MATERIAL NUMBER | ENG NUMBER | CKTS | MATERIAL NUMBER | ENG NUMBER |
|---|---|---|---|---|---|
| 02 | 22-28-4027 | A-42375-0177 | 20 | 22-28-4207 | A-42375-0195 |
| 03 | 22-28-4037 | A-42375-0178 | 21 | 22-28-4217 | A-42375-0196 |
| 04 | 22-28-4047 | A-42375-0179 | 22 | 22-28-4227 | A-42375-0197 |
| 05 | 22-28-4057 | A-42375-0180 | 23 | 22-28-4237 | A-42375-0198 |
| 06 | 22-28-4067 | A-42375-0181 | 24 | 22-28-4247 | A-42375-0199 |
| 07 | 22-28-4077 | A-42375-0182 | 25 | 22-28-4257 | A-42375-0200 |
| 08 | 22-28-4087 | A-42375-0183 | 26 | 22-28-4267 | A-42375-0201 |
| 09 | 22-28-4097 | A-42375-0184 | 27 | 22-28-4277 | A-42375-0202 |
| 10 | 22-28-4107 | A-42375-0185 | 28 | 22-28-4287 | A-42375-0203 |
| 11 | 22-28-4117 | A-42375-0186 | 29 | 22-28-4297 | A-42375-0204 |
| 12 | 22-28-4127 | A-42375-0187 | 30 | 22-28-4307 | A-42375-0205 |
| 13 | 22-28-4137 | A-42375-0188 | 31 | 22-28-4317 | A-42375-0206 |
| 14 | 22-28-4147 | A-42375-0189 | 32 | 22-28-4327 | A-42375-0207 |
| 15 | 22-28-4157 | A-42375-0190 | 33 | 22-28-4337 | A-42375-0208 |
| 16 | 22-28-4167 | A-42375-0191 | 34 | 22-28-4347 | A-42375-0209 |
| 17 | 22-28-4177 | A-42375-0192 | 35 | 22-28-4357 | A-42375-0210 |
| 18 | 22-28-4187 | A-42375-0193 | 36 | 22-28-4367 | A-42375-0211 |
| 19 | 22-28-4197 | A-42375-0194 | | | |

| REV: | ECR/ECN INFORMATION: | TITLE: | SHEET No. |
|---|---|---|---|
| **U** | EC No.: **UCP2017-2793**<br>DATE: **12/20/2021** | **KK 100 HEADER ASSY<br>FLAT VERTICAL<br>BREAKAWAY** | **- 4 -** |

| DOCUMENT NUMBER: | CREATED / REVISED BY: | CHECKED BY: | APPROVED BY: |
|---|---|---|---|
| **SD- 42375-001** | **SS06** | **ISHWARG** | **ISHWARG** |

| ENG. NO: A-42375-0212/0246 | |
|---|---|
| HEADER NUMBER: | 42312-0036 |
| PIN NUMBER: | 42663-AMA154 |
| PIN LENGTH: L | .505 / 12.83 |
| MATING LENGTH: M | .295 / 7.49 |
| GOLD POINT: G | N/A |
| PC TAIL LENGTH: P | .120 / 3.05 |
| TIN: T | OVERALL |
| CKTS: | 2-36 |
| KINKS: | NO |
| VOIDED CKTS: | NONE |
| PACKAGING: | BULK PK-40873-0041 |

| CKTS | MATERIAL NUMBER | ENG NUMBER | CKTS | MATERIAL NUMBER | ENG NUMBER |
|---|---|---|---|---|---|
| 02 | 22-28-4022 | A-42375-0212 | 20 | 22-28-4202 | A-42375-0230 |
| 03 | 22-28-4032 | A-42375-0213 | 21 | 22-28-4212 | A-42375-0231 |
| 04 | 22-28-4042 | A-42375-0214 | 22 | 22-28-4222 | A-42375-0232 |
| 05 | 22-28-4052 | A-42375-0215 | 23 | 22-28-4232 | A-42375-0233 |
| 06 | 22-28-4062 | A-42375-0216 | 24 | 22-28-4242 | A-42375-0234 |
| 07 | 22-28-4072 | A-42375-0217 | 25 | 22-28-4252 | A-42375-0235 |
| 08 | 22-28-4082 | A-42375-0218 | 26 | 22-28-4262 | A-42375-0236 |
| 09 | 22-28-4092 | A-42375-0219 | 27 | 22-28-4272 | A-42375-0237 |
| 10 | 22-28-4102 | A-42375-0220 | 28 | 22-28-4282 | A-42375-0238 |
| 11 | 22-28-4112 | A-42375-0221 | 29 | 22-28-4292 | A-42375-0239 |
| 12 | 22-28-4122 | A-42375-0222 | 30 | 22-28-4302 | A-42375-0240 |
| 13 | 22-28-4132 | A-42375-0223 | 31 | 22-28-4312 | A-42375-0241 |
| 14 | 22-28-4142 | A-42375-0224 | 32 | 22-28-4322 | A-42375-0242 |
| 15 | 22-28-4152 | A-42375-0225 | 33 | 22-28-4332 | A-42375-0243 |
| 16 | 22-28-4162 | A-42375-0226 | 34 | 22-28-4342 | A-42375-0244 |
| 17 | 22-28-4172 | A-42375-0227 | 35 | 22-28-4352 | A-42375-0245 |
| 18 | 22-28-4182 | A-42375-0228 | 36 | 22-28-4362 | A-42375-0246 |
| 19 | 22-28-4192 | A-42375-0229 | | | |

| ENG. NO: A-42375-0247/0281 | |
|---|---|
| HEADER NUMBER: | 42312-0036 |
| PIN NUMBER: | 42663-AMB208 |
| PIN LENGTH: L | .505 / 12.83 |
| MATING LENGTH: M | .295 / 7.49 |
| GOLD POINT: G | .140 / 3.56 |
| PC TAIL LENGTH: P | .120 / 3.05 |
| TIN: T | .135 / 3.43 |
| CKTS: | 2-36 |
| KINKS: | NO |
| VOIDED CKTS: | NONE |
| PACKAGING: | BULK PK-40873-0041 |

| CKTS | MATERIAL NUMBER | ENG NUMBER | CKTS | MATERIAL NUMBER | ENG NUMBER |
|---|---|---|---|---|---|
| 02 | 22-28-4025 | A-42375-0247 | 20 | 22-28-4205 | A-42375-0265 |
| 03 | 22-28-4035 | A-42375-0248 | 21 | 22-28-4215 | A-42375-0266 |
| 04 | 22-28-4045 | A-42375-0249 | 22 | 22-28-4225 | A-42375-0267 |
| 05 | 22-28-4055 | A-42375-0250 | 23 | 22-28-4235 | A-42375-0268 |
| 06 | 22-28-4065 | A-42375-0251 | 24 | 22-28-4245 | A-42375-0269 |
| 07 | 22-28-4075 | A-42375-0252 | 25 | 22-28-4255 | A-42375-0270 |
| 08 | 22-28-4085 | A-42375-0253 | 26 | 22-28-4265 | A-42375-0271 |
| 09 | 22-28-4095 | A-42375-0254 | 27 | 22-28-4275 | A-42375-0272 |
| 10 | 22-28-4105 | A-42375-0255 | 28 | 22-28-4285 | A-42375-0273 |
| 11 | 22-28-4115 | A-42375-0256 | 29 | 22-28-4295 | A-42375-0274 |
| 12 | 22-28-4125 | A-42375-0257 | 30 | 22-28-4305 | A-42375-0275 |
| 13 | 22-28-4135 | A-42375-0258 | 31 | 22-28-4315 | A-42375-0276 |
| 14 | 22-28-4145 | A-42375-0259 | 32 | 22-28-4325 | A-42375-0277 |
| 15 | 22-28-4155 | A-42375-0260 | 33 | 22-28-4335 | A-42375-0278 |
| 16 | 22-28-4165 | A-42375-0261 | 34 | 22-28-4345 | A-42375-0279 |
| 17 | 22-28-4175 | A-42375-0262 | 35 | 22-28-4355 | A-42375-0280 |
| 18 | 22-28-4185 | A-42375-0263 | 36 | 22-28-4365 | A-42375-0281 |
| 19 | 22-28-4195 | A-42375-0264 | | | |

| REV: | ECR/ECN INFORMATION: | TITLE: | SHEET No. |
|---|---|---|---|
| **U** | EC No.: **UCP2017-2793**<br>DATE: **12/20/2021** | **KK 100 HEADER ASSY FLAT VERTICAL BREAKAWAY** | **- 5 -** |

| DOCUMENT NUMBER: | CREATED / REVISED BY: | CHECKED BY: | APPROVED BY: |
|---|---|---|---|
| **SD- 42375-001** | **SS06** | **ISHWARG** | **ISHWARG** |

| ENG. NO: A-42375-0282/0316 | |
|---|---|
| HEADER NUMBER: | 42312-0036 |
| PIN NUMBER: | 42663-AMB228 |
| PIN LENGTH: L | .505 / 12.83 |
| MATING LENGTH: M | .295 / 7.49 |
| GOLD POINT: G | .140 / 3.56 |
| PC TAIL LENGTH: P | .120 / 3.05 |
| TIN: T | .135 / 3.43 |
| CKTS: | 2-36 |
| KINKS: | NO |
| VOIDED CKTS: | NONE |
| PACKAGING: | BULK PK-40873-0041 |

| CKTS | MATERIAL NUMBER | ENG NUMBER | CKTS | MATERIAL NUMBER | ENG NUMBER |
|---|---|---|---|---|---|
| 02 | 22-28-4028 | A-42375-0282 | 20 | 22-28-4208 | A-42375-0300 |
| 03 | 22-28-4038 | A-42375-0283 | 21 | 22-28-4218 | A-42375-0301 |
| 04 | 22-28-4048 | A-42375-0284 | 22 | 22-28-4228 | A-42375-0302 |
| 05 | 22-28-4058 | A-42375-0285 | 23 | 22-28-4238 | A-42375-0303 |
| 06 | 22-28-4068 | A-42375-0286 | 24 | 22-28-4248 | A-42375-0304 |
| 07 | 22-28-4078 | A-42375-0287 | 25 | 22-28-4258 | A-42375-0305 |
| 08 | 22-28-4088 | A-42375-0288 | 26 | 22-28-4268 | A-42375-0306 |
| 09 | 22-28-4098 | A-42375-0289 | 27 | 22-28-4278 | A-42375-0307 |
| 10 | 22-28-4108 | A-42375-0290 | 28 | 22-28-4288 | A-42375-0308 |
| 11 | 22-28-4118 | A-42375-0291 | 29 | 22-28-4298 | A-42375-0309 |
| 12 | 22-28-4128 | A-42375-0192 | 30 | 22-28-4308 | A-42375-0310 |
| 13 | 22-28-4138 | A-42375-0293 | 31 | 22-28-4318 | A-42375-0311 |
| 14 | 22-28-4148 | A-42375-0294 | 32 | 22-28-4328 | A-42375-0312 |
| 15 | 22-28-4158 | A-42375-0295 | 33 | 22-28-4338 | A-42375-0313 |
| 16 | 22-28-4168 | A-42375-0296 | 34 | 22-28-4348 | A-42375-0314 |
| 17 | 22-28-4178 | A-42375-0297 | 35 | 22-28-4358 | A-42375-0315 |
| 18 | 22-28-4188 | A-42375-0298 | 36 | 22-28-4368 | A-42375-0316 |
| 19 | 22-28-4198 | A-42375-0299 | | | |

| ENG. NO: A-42375-0317/0351 | |
|---|---|
| HEADER NUMBER: | 42312-0036 |
| PIN NUMBER: | 42663-ADA154 |
| PIN LENGTH: L | .465 / 11.81 |
| MATING LENGTH: M | .240 / 6.09 |
| GOLD POINT: G | N/A |
| PC TAIL LENGTH: P | .135 / 3.43 |
| TIN: T | OVERALL |
| CKTS: | 2-36 |
| KINKS: | SMES-42003 |
| VOIDED CKTS: | NONE |
| PACKAGING: | BULK PK-40873-0041 |

| CKTS | MATERIAL NUMBER | ENG NUMBER | CKTS | MATERIAL NUMBER | ENG NUMBER |
|---|---|---|---|---|---|
| 02 | 22-28-5020 | A-42375-0317 | 20 | 22-28-5200 | A-42375-0335 |
| 03 | 22-28-5030 | A-42375-0318 | 21 | 22-28-5210 | A-42375-0336 |
| 04 | 22-28-5040 | A-42375-0319 | 22 | 22-28-5220 | A-42375-0337 |
| 05 | 22-28-5050 | A-42375-0320 | 23 | 22-28-5230 | A-42375-0338 |
| 06 | 22-28-5060 | A-42375-0321 | 24 | 22-28-5240 | A-42375-0339 |
| 07 | 22-28-5070 | A-42375-0322 | 25 | 22-28-5250 | A-42375-0340 |
| 08 | 22-28-5080 | A-42375-0323 | 26 | 22-28-5260 | A-42375-0341 |
| 09 | 22-28-5090 | A-42375-0324 | 27 | 22-28-5270 | A-42375-0342 |
| 10 | 22-28-5100 | A-42375-0325 | 28 | 22-28-5280 | A-42375-0343 |
| 11 | 22-28-5110 | A-42375-0326 | 29 | 22-28-5290 | A-42375-0344 |
| 12 | 22-28-5120 | A-42375-0327 | 30 | 22-28-5300 | A-42375-0345 |
| 13 | 22-28-5130 | A-42375-0328 | 31 | 22-28-5310 | A-42375-0346 |
| 14 | 22-28-5140 | A-42375-0329 | 32 | 22-28-5320 | A-42375-0347 |
| 15 | 22-28-5150 | A-42375-0330 | 33 | 22-28-5330 | A-42375-0348 |
| 16 | 22-28-5160 | A-42375-0331 | 34 | 22-28-5340 | A-42375-0349 |
| 17 | 22-28-5170 | A-42375-0332 | 35 | 22-28-5350 | A-42375-0350 |
| 18 | 22-28-5180 | A-42375-0333 | 36 | 22-28-5360 | A-42375-0351 |
| 19 | 22-28-5190 | A-42375-0334 | | | |

| REV: | ECR/ECN INFORMATION: | TITLE: | SHEET No. |
|---|---|---|---|
| **U** | EC No.: **UCP2017-2793**<br>DATE: **12/20/2021** | **KK 100 HEADER ASSY<br>FLAT VERTICAL<br>BREAKAWAY** | **- 6 -** |

| DOCUMENT NUMBER: | CREATED / REVISED BY: | CHECKED BY: | APPROVED BY: |
|---|---|---|---|
| **SD- 42375-001** | **SS06** | **ISHWARG** | **ISHWARG** |

| ENG. NO: A-42375-0352/0386 | |
|---|---|
| HEADER NUMBER: | 42312-0036 |
| PIN NUMBER: | 42663-ADB208 |
| PIN LENGTH: L | .465 / 11.81 |
| MATING LENGTH: M | .240 / 6.09 |
| GOLD POINT: G | .100 / 2.54 |
| PC TAIL LENGTH: P | .135 / 3.43 |
| TIN: T | .100 / 2.54 |
| CKTS: | 2-36 |
| KINKS: | SMES-42003 |
| VOIDED CKTS: | NONE |
| PACKAGING: | BULK PK-40873-0041 |

| CKTS | MATERIAL NUMBER | ENG NUMBER | CKTS | MATERIAL NUMBER | ENG NUMBER |
|---|---|---|---|---|---|
| 02 | 22-28-5023 | A-42375-0352 | 20 | 22-28-5203 | A-42375-0370 |
| 03 | 22-28-5033 | A-42375-0353 | 21 | 22-28-5213 | A-42375-0371 |
| 04 | 22-28-5043 | A-42375-0354 | 22 | 22-28-5223 | A-42375-0372 |
| 05 | 22-28-5053 | A-42375-0355 | 23 | 22-28-5233 | A-42375-0373 |
| 06 | 22-28-5063 | A-42375-0356 | 24 | 22-28-5243 | A-42375-0374 |
| 07 | 22-28-5073 | A-42375-0357 | 25 | 22-28-5253 | A-42375-0375 |
| 08 | 22-28-5083 | A-42375-0358 | 26 | 22-28-5263 | A-42375-0376 |
| 09 | 22-28-5093 | A-42375-0359 | 27 | 22-28-5273 | A-42375-0377 |
| 10 | 22-28-5103 | A-42375-0360 | 28 | 22-28-5283 | A-42375-0378 |
| 11 | 22-28-5113 | A-42375-0361 | 29 | 22-28-5293 | A-42375-0379 |
| 12 | 22-28-5123 | A-42375-0362 | 30 | 22-28-5303 | A-42375-0380 |
| 13 | 22-28-5133 | A-42375-0363 | 31 | 22-28-5313 | A-42375-0381 |
| 14 | 22-28-5143 | A-42375-0364 | 32 | 22-28-5323 | A-42375-0382 |
| 15 | 22-28-5153 | A-42375-0365 | 33 | 22-28-5333 | A-42375-0383 |
| 16 | 22-28-5163 | A-42375-0366 | 34 | 22-28-5343 | A-42375-0384 |
| 17 | 22-28-5173 | A-42375-0367 | 35 | 22-28-5353 | A-42375-0385 |
| 18 | 22-28-5183 | A-42375-0368 | 36 | 22-28-5363 | A-42375-0386 |
| 19 | 22-28-5193 | A-42375-0369 | | | |

| ENG. NO: A-42375-0387/0421 | |
|---|---|
| HEADER NUMBER: | 42312-0036 |
| PIN NUMBER: | 42663-ADB228 |
| PIN LENGTH: L | .465 / 11.81 |
| MATING LENGTH: M | .240 / 6.09 |
| GOLD POINT: G | .100 / 2.54 |
| PC TAIL LENGTH: P | .135 / 3.43 |
| TIN: T | .100 / 2.54 |
| CKTS: | 2-36 |
| KINKS: | SMES-42003 |
| VOIDED CKTS: | NONE |
| PACKAGING: | BULK PK-40873-0041 |

| CKTS | MATERIAL NUMBER | ENG NUMBER | CKTS | MATERIAL NUMBER | ENG NUMBER |
|---|---|---|---|---|---|
| 02 | 22-28-5026 | A-42375-0387 | 20 | 22-28-5206 | A-42375-0405 |
| 03 | 22-28-5036 | A-42375-0388 | 21 | 22-28-5216 | A-42375-0406 |
| 04 | 22-28-5046 | A-42375-0389 | 22 | 22-28-5226 | A-42375-0407 |
| 05 | 22-28-5056 | A-42375-0390 | 23 | 22-28-5236 | A-42375-0408 |
| 06 | 22-28-5066 | A-42375-0391 | 24 | 22-28-5246 | A-42375-0409 |
| 07 | 22-28-5076 | A-42375-0392 | 25 | 22-28-5256 | A-42375-0410 |
| 08 | 22-28-5086 | A-42375-0393 | 26 | 22-28-5266 | A-42375-0411 |
| 09 | 22-28-5096 | A-42375-0394 | 27 | 22-28-5276 | A-42375-0412 |
| 10 | 22-28-5106 | A-42375-0395 | 28 | 22-28-5286 | A-42375-0413 |
| 11 | 22-28-5116 | A-42375-0396 | 29 | 22-28-5296 | A-42375-0414 |
| 12 | 22-28-5126 | A-42375-0397 | 30 | 22-28-5306 | A-42375-0415 |
| 13 | 22-28-5136 | A-42375-0398 | 31 | 22-28-5316 | A-42375-0416 |
| 14 | 22-28-5146 | A-42375-0399 | 32 | 22-28-5326 | A-42375-0417 |
| 15 | 22-28-5156 | A-42375-0400 | 33 | 22-28-5336 | A-42375-0418 |
| 16 | 22-28-5166 | A-42375-0401 | 34 | 22-28-5346 | A-42375-0419 |
| 17 | 22-28-5176 | A-42375-0402 | 35 | 22-28-5356 | A-42375-0420 |
| 18 | 22-28-5186 | A-42375-0403 | 36 | 22-28-5366 | A-42375-0421 |
| 19 | 22-28-5196 | A-42375-0404 | | | |

| REV: | ECR/ECN INFORMATION: | TITLE: | SHEET No. |
|---|---|---|---|
| **U** | EC No.: **UCP2017-2793**<br>DATE: **12/20/2021** | **KK 100 HEADER ASSY<br>FLAT VERTICAL<br>BREAKAWAY** | **- 7 -** |

| DOCUMENT NUMBER: | CREATED / REVISED BY: | CHECKED BY: | APPROVED BY: |
|---|---|---|---|
| **SD- 42375-001** | **SS06** | **ISHWARG** | **ISHWARG** |

| ENG. NO: A-42375-0422/0456 | |
|---|---|
| HEADER NUMBER: | 42312-0036 |
| PIN NUMBER: | 42663-AYA154 |
| PIN LENGTH: L | .545 / 13.84 |
| MATING LENGTH: M | .320 / 8.13 |
| GOLD POINT: G | N/A |
| PC TAIL LENGTH: P | .135 / 3.43 |
| TIN: T | OVERALL |
| CKTS: | 2-36 |
| KINKS: | SMES-42003 |
| VOIDED CKTS: | NONE |
| PACKAGING: | BULK PK-40873-0041 |

| CKTS | MATERIAL NUMBER | ENG NUMBER | CKTS | MATERIAL NUMBER | ENG NUMBER |
|---|---|---|---|---|---|
| 02 | 22-28-5021 | A-42375-0422 | 20 | 22-28-5201 | A-42375-0440 |
| 03 | 22-28-5031 | A-42375-0423 | 21 | 22-28-5211 | A-42375-0441 |
| 04 | 22-28-5041 | A-42375-0424 | 22 | 22-28-5221 | A-42375-0442 |
| 05 | 22-28-5051 | A-42375-0425 | 23 | 22-28-5231 | A-42375-0443 |
| 06 | 22-28-5061 | A-42375-0426 | 24 | 22-28-5241 | A-42375-0444 |
| 07 | 22-28-5071 | A-42375-0427 | 25 | 22-28-5251 | A-42375-0445 |
| 08 | 22-28-5081 | A-42375-0428 | 26 | 22-28-5261 | A-42375-0446 |
| 09 | 22-28-5091 | A-42375-0429 | 27 | 22-28-5271 | A-42375-0447 |
| 10 | 22-28-5101 | A-42375-0430 | 28 | 22-28-5281 | A-42375-0448 |
| 11 | 22-28-5111 | A-42375-0431 | 29 | 22-28-5291 | A-42375-0449 |
| 12 | 22-28-5121 | A-42375-0432 | 30 | 22-28-5301 | A-42375-0450 |
| 13 | 22-28-5131 | A-42375-0433 | 31 | 22-28-5311 | A-42375-0451 |
| 14 | 22-28-5141 | A-42375-0434 | 32 | 22-28-5321 | A-42375-0452 |
| 15 | 22-28-5151 | A-42375-0435 | 33 | 22-28-5331 | A-42375-0453 |
| 16 | 22-28-5161 | A-42375-0436 | 34 | 22-28-5341 | A-42375-0454 |
| 17 | 22-28-5171 | A-42375-0437 | 35 | 22-28-5351 | A-42375-0455 |
| 18 | 22-28-5181 | A-42375-0438 | 36 | 22-28-5361 | A-42375-0456 |
| 19 | 22-28-5191 | A-42375-0439 | | | |

| ENG. NO: A-42375-0457/0491 | |
|---|---|
| HEADER NUMBER: | 42312-0036 |
| PIN NUMBER: | 42663-AYB208 |
| PIN LENGTH: L | .545 / 13.84 |
| MATING LENGTH: M | .320 / 8.13 |
| GOLD POINT: G | .140 / 3.56 |
| PC TAIL LENGTH: P | .135 / 3.43 |
| TIN: T | .135 / 3.43 |
| CKTS: | 2-36 |
| KINKS: | SMES-42003 |
| VOIDED CKTS: | NONE |
| PACKAGING: | BULK PK-40873-0041 |

| CKTS | MATERIAL NUMBER | ENG NUMBER | CKTS | MATERIAL NUMBER | ENG NUMBER |
|---|---|---|---|---|---|
| 02 | 22-28-5024 | A-42375-0457 | 20 | 22-28-5204 | A-42375-0475 |
| 03 | 22-28-5034 | A-42375-0458 | 21 | 22-28-5214 | A-42375-0476 |
| 04 | 22-28-5044 | A-42375-0459 | 22 | 22-28-5224 | A-42375-0477 |
| 05 | 22-28-5054 | A-42375-0460 | 23 | 22-28-5234 | A-42375-0478 |
| 06 | 22-28-5064 | A-42375-0461 | 24 | 22-28-5244 | A-42375-0479 |
| 07 | 22-28-5074 | A-42375-0462 | 25 | 22-28-5254 | A-42375-0480 |
| 08 | 22-28-5084 | A-42375-0463 | 26 | 22-28-5264 | A-42375-0481 |
| 09 | 22-28-5094 | A-42375-0464 | 27 | 22-28-5274 | A-42375-0482 |
| 10 | 22-28-5104 | A-42375-0465 | 28 | 22-28-5284 | A-42375-0483 |
| 11 | 22-28-5114 | A-42375-0466 | 29 | 22-28-5294 | A-42375-0484 |
| 12 | 22-28-5124 | A-42375-0467 | 30 | 22-28-5304 | A-42375-0485 |
| 13 | 22-28-5134 | A-42375-0468 | 31 | 22-28-5314 | A-42375-0486 |
| 14 | 22-28-5144 | A-42375-0469 | 32 | 22-28-5324 | A-42375-0487 |
| 15 | 22-28-5154 | A-42375-0470 | 33 | 22-28-5334 | A-42375-0488 |
| 16 | 22-28-5164 | A-42375-0471 | 34 | 22-28-5344 | A-42375-0489 |
| 17 | 22-28-5174 | A-42375-0472 | 35 | 22-28-5354 | A-42375-0490 |
| 18 | 22-28-5184 | A-42375-0473 | 36 | 22-28-5364 | A-42375-0491 |
| 19 | 22-28-5194 | A-42375-0474 | | | |

| REV: | ECR/ECN INFORMATION: | TITLE: | SHEET No. |
|---|---|---|---|
| **U** | EC No.: **UCP2017-2793**<br>DATE: **12/20/2021** | **KK 100 HEADER ASSY<br>FLAT VERTICAL<br>BREAKAWAY** | **- 8 -** |

| DOCUMENT NUMBER: | CREATED / REVISED BY: | CHECKED BY: | APPROVED BY: |
|---|---|---|---|
| **SD- 42375-001** | **SS06** | **ISHWARG** | **ISHWARG** |

| ENG. NO: A-42375-0492/0526 | |
|---|---|
| HEADER NUMBER: | 42312-0036 |
| PIN NUMBER: | 42663-AYB228 |
| PIN LENGTH: L | .545 / 13.84 |
| MATING LENGTH: M | .320 / 8.13 |
| GOLD POINT: G | .140 / 3.56 |
| PC TAIL LENGTH: P | .135 / 3.43 |
| TIN: T | .135 / 3.43 |
| CKTS: | 2-36 |
| KINKS: | SMES-42003 |
| VOIDED CKTS: | NONE |
| PACKAGING: | BULK PK-40873-0041 |

| CKTS | MATERIAL NUMBER | ENG NUMBER | CKTS | MATERIAL NUMBER | ENG NUMBER |
|---|---|---|---|---|---|
| 02 | 22-28-5027 | A-42375-0492 | 20 | 22-28-5207 | A-42375-0510 |
| 03 | 22-28-5037 | A-42375-0493 | 21 | 22-28-5217 | A-42375-0511 |
| 04 | 22-28-5047 | A-42375-0494 | 22 | 22-28-5227 | A-42375-0512 |
| 05 | 22-28-5057 | A-42375-0495 | 23 | 22-28-5237 | A-42375-0513 |
| 06 | 22-28-5067 | A-42375-0496 | 24 | 22-28-5247 | A-42375-0514 |
| 07 | 22-28-5077 | A-42375-0497 | 25 | 22-28-5257 | A-42375-0515 |
| 08 | 22-28-5087 | A-42375-0498 | 26 | 22-28-5267 | A-42375-0516 |
| 09 | 22-28-5097 | A-42375-0499 | 27 | 22-28-5277 | A-42375-0517 |
| 10 | 22-28-5107 | A-42375-0500 | 28 | 22-28-5287 | A-42375-0518 |
| 11 | 22-28-5117 | A-42375-0501 | 29 | 22-28-5297 | A-42375-0519 |
| 12 | 22-28-5127 | A-42375-0502 | 30 | 22-28-5307 | A-42375-0520 |
| 13 | 22-28-5137 | A-42375-0503 | 31 | 22-28-5317 | A-42375-0521 |
| 14 | 22-28-5147 | A-42375-0504 | 32 | 22-28-5327 | A-42375-0522 |
| 15 | 22-28-5157 | A-42375-0505 | 33 | 22-28-5337 | A-42375-0523 |
| 16 | 22-28-5167 | A-42375-0506 | 34 | 22-28-5347 | A-42375-0524 |
| 17 | 22-28-5177 | A-42375-0507 | 35 | 22-28-5357 | A-42375-0525 |
| 18 | 22-28-5187 | A-42375-0508 | 36 | 22-28-5367 | A-42375-0526 |
| 19 | 22-28-5197 | A-42375-0509 | | | |

| ENG. NO: A-42375-0527/0561 | |
|---|---|
| HEADER NUMBER: | 42312-0036 |
| PIN NUMBER: | 42663-ARA154 |
| PIN LENGTH: L | .520 / 13.21 |
| MATING LENGTH: M | .295 / 7.49 |
| GOLD POINT: G | N/A |
| PC TAIL LENGTH: P | .135 / 3.43 |
| TIN: T | OVERALL |
| CKTS: | 2-36 |
| KINKS: | SMES-42003 |
| VOIDED CKTS: | NONE |
| PACKAGING: | BULK PK-40873-0041 |

| CKTS | MATERIAL NUMBER | ENG NUMBER | CKTS | MATERIAL NUMBER | ENG NUMBER |
|---|---|---|---|---|---|
| 02 | 22-28-5022 | A-42375-0527 | 20 | 22-28-5202 | A-42375-0545 |
| 03 | 22-28-5032 | A-42375-0528 | 21 | 22-28-5212 | A-42375-0546 |
| 04 | 22-28-5042 | A-42375-0529 | 22 | 22-28-5222 | A-42375-0547 |
| 05 | 22-28-5052 | A-42375-0530 | 23 | 22-28-5232 | A-42375-0548 |
| 06 | 22-28-5062 | A-42375-0531 | 24 | 22-28-5242 | A-42375-0549 |
| 07 | 22-28-5072 | A-42375-0532 | 25 | 22-28-5252 | A-42375-0550 |
| 08 | 22-28-5082 | A-42375-0533 | 26 | 22-28-5262 | A-42375-0551 |
| 09 | 22-28-5092 | A-42375-0534 | 27 | 22-28-5272 | A-42375-0552 |
| 10 | 22-28-5102 | A-42375-0535 | 28 | 22-28-5282 | A-42375-0553 |
| 11 | 22-28-5112 | A-42375-0536 | 29 | 22-28-5292 | A-42375-0554 |
| 12 | 22-28-5122 | A-42375-0537 | 30 | 22-28-5302 | A-42375-0555 |
| 13 | 22-28-5132 | A-42375-0538 | 31 | 22-28-5312 | A-42375-0556 |
| 14 | 22-28-5142 | A-42375-0539 | 32 | 22-28-5322 | A-42375-0557 |
| 15 | 22-28-5152 | A-42375-0540 | 33 | 22-28-5332 | A-42375-0558 |
| 16 | 22-28-5162 | A-42375-0541 | 34 | 22-28-5342 | A-42375-0559 |
| 17 | 22-28-5172 | A-42375-0542 | 35 | 22-28-5352 | A-42375-0560 |
| 18 | 22-28-5182 | A-42375-0543 | 36 | 22-28-5362 | A-42375-0561 |
| 19 | 22-28-5192 | A-42375-0544 | | | |

| REV: | ECR/ECN INFORMATION: | TITLE: | SHEET No. |
|---|---|---|---|
| **U** | EC No.: **UCP2017-2793**<br>DATE: **12/20/2021** | **KK 100 HEADER ASSY<br>FLAT VERTICAL<br>BREAKAWAY** | **- 9 -** |

| DOCUMENT NUMBER: | CREATED / REVISED BY: | CHECKED BY: | APPROVED BY: |
|---|---|---|---|
| **SD- 42375-001** | **SS06** | **ISHWARG** | **ISHWARG** |

| ENG. NO: A-42375-0562/0596 | |
|---|---|
| HEADER NUMBER: | 42312-0036 |
| PIN NUMBER: | 42663-ARB208 |
| PIN LENGTH: L | .520 / 13.21 |
| MATING LENGTH: M | .295 / 7.49 |
| GOLD POINT: G | .140 / 3.56 |
| PC TAIL LENGTH: P | .135 / 3.43 |
| TIN: T | .135 / 3.43 |
| CKTS: | 2-36 |
| KINKS: | SMES-42003 |
| VOIDED CKTS: | NONE |
| PACKAGING: | BULK PK-40873-0041 |

| CKTS | MATERIAL NUMBER | ENG NUMBER | CKTS | MATERIAL NUMBER | ENG NUMBER |
|---|---|---|---|---|---|
| 02 | 22-28-5025 | A-42375-0562 | 20 | 22-28-5205 | A-42375-0580 |
| 03 | 22-28-5035 | A-42375-0563 | 21 | 22-28-5215 | A-42375-0581 |
| 04 | 22-28-5045 | A-42375-0564 | 22 | 22-28-5225 | A-42375-0582 |
| 05 | 22-28-5055 | A-42375-0565 | 23 | 22-28-5235 | A-42375-0583 |
| 06 | 22-28-5065 | A-42375-0566 | 24 | 22-28-5245 | A-42375-0584 |
| 07 | 22-28-5075 | A-42375-0567 | 25 | 22-28-5255 | A-42375-0585 |
| 08 | 22-28-5085 | A-42375-0568 | 26 | 22-28-5265 | A-42375-0586 |
| 09 | 22-28-5095 | A-42375-0569 | 27 | 22-28-5275 | A-42375-0587 |
| 10 | 22-28-5105 | A-42375-0570 | 28 | 22-28-5285 | A-42375-0588 |
| 11 | 22-28-5115 | A-42375-0571 | 29 | 22-28-5295 | A-42375-0589 |
| 12 | 22-28-5125 | A-42375-0572 | 30 | 22-28-5305 | A-42375-0590 |
| 13 | 22-28-5135 | A-42375-0573 | 31 | 22-28-5315 | A-42375-0591 |
| 14 | 22-28-5145 | A-42375-0574 | 32 | 22-28-5325 | A-42375-0592 |
| 15 | 22-28-5155 | A-42375-0575 | 33 | 22-28-5335 | A-42375-0593 |
| 16 | 22-28-5165 | A-42375-0576 | 34 | 22-28-5345 | A-42375-0594 |
| 17 | 22-28-5175 | A-42375-0577 | 35 | 22-28-5355 | A-42375-0595 |
| 18 | 22-28-5185 | A-42375-0578 | 36 | 22-28-5365 | A-42375-0596 |
| 19 | 22-28-5195 | A-42375-0579 | | | |

| ENG. NO: A-42375-0597/0631 | |
|---|---|
| HEADER NUMBER: | 42312-0036 |
| PIN NUMBER: | 42663-ARB228 |
| PIN LENGTH: L | .520 / 13.21 |
| MATING LENGTH: M | .295 / 7.49 |
| GOLD POINT: G | .140 / 3.56 |
| PC TAIL LENGTH: P | .135 / 3.43 |
| TIN: T | .135 / 3.43 |
| CKTS: | 2-36 |
| KINKS: | SMES-42003 |
| VOIDED CKTS: | NONE |
| PACKAGING: | BULK PK-40873-0041 |

| CKTS | MATERIAL NUMBER | ENG NUMBER | CKTS | MATERIAL NUMBER | ENG NUMBER |
|---|---|---|---|---|---|
| 02 | 22-28-5028 | A-42375-0597 | 20 | 22-28-5208 | A-42375-0615 |
| 03 | 22-28-5038 | A-42375-0598 | 21 | 22-28-5218 | A-42375-0616 |
| 04 | 22-28-5048 | A-42375-0599 | 22 | 22-28-5228 | A-42375-0617 |
| 05 | 22-28-5058 | A-42375-0600 | 23 | 22-28-5238 | A-42375-0618 |
| 06 | 22-28-5068 | A-42375-0601 | 24 | 22-28-5248 | A-42375-0619 |
| 07 | 22-28-5078 | A-42375-0602 | 25 | 22-28-5258 | A-42375-0620 |
| 08 | 22-28-5088 | A-42375-0603 | 26 | 22-28-5268 | A-42375-0621 |
| 09 | 22-28-5098 | A-42375-0604 | 27 | 22-28-5278 | A-42375-0622 |
| 10 | 22-28-5108 | A-42375-0605 | 28 | 22-28-5288 | A-42375-0623 |
| 11 | 22-28-5118 | A-42375-0606 | 29 | 22-28-5298 | A-42375-0624 |
| 12 | 22-28-5128 | A-42375-0607 | 30 | 22-28-5308 | A-42375-0625 |
| 13 | 22-28-5138 | A-42375-0608 | 31 | 22-28-5318 | A-42375-0626 |
| 14 | 22-28-5148 | A-42375-0609 | 32 | 22-28-5328 | A-42375-0627 |
| 15 | 22-28-5158 | A-42375-0610 | 33 | 22-28-5338 | A-42375-0628 |
| 16 | 22-28-5168 | A-42375-0611 | 34 | 22-28-5348 | A-42375-0629 |
| 17 | 22-28-5178 | A-42375-0612 | 35 | 22-28-5358 | A-42375-0630 |
| 18 | 22-28-5188 | A-42375-0613 | 36 | 22-28-5368 | A-42375-0631 |
| 19 | 22-28-5198 | A-42375-0614 | | | |

| REV: | ECR/ECN INFORMATION: | TITLE: | SHEET No. |
|---|---|---|---|
| **U** | EC No.: **UCP2017-2793**<br>DATE: **12/20/2021** | **KK 100 HEADER ASSY<br>FLAT VERTICAL<br>BREAKAWAY** | **- 10 -** |

| DOCUMENT NUMBER: | CREATED / REVISED BY: | CHECKED BY: | APPROVED BY: |
|---|---|---|---|
| **SD- 42375-001** | **SS06** | **ISHWARG** | **ISHWARG** |

| ENG. NO: A-42375-0667/0699 | |
|---|---|
| HEADER NUMBER: | 42312-0036 |
| PIN NUMBER: | 42663-ABB208 |
| PIN LENGTH: L | .455 / 11.56 |
| MATING LENGTH: M | .240 / 6.09 |
| GOLD POINT: G | .100 / 2.54 |
| PC TAIL LENGTH: P | .125 / 3.18 |
| TIN: T | .100 / 2.54 |
| CKTS: | 4-36 |
| KINKS: | NO |
| VOIDED CKTS: | 4 |
| PACKAGING: | BULK PK-40873-0041 |

| CKTS | MATERIAL NUMBER | ENG NUMBER | CKTS | MATERIAL NUMBER | ENG NUMBER |
|---|---|---|---|---|---|
| 02 | | | 20 | 42375-0683 | A-42375-0683 |
| 03 | | | 21 | 42375-0684 | A-42375-0684 |
| 04 | 42375-0667 | A-42375-0667 | 22 | 42375-0685 | A-42375-0685 |
| 05 | 42375-0668 | A-42375-0668 | 23 | 42375-0686 | A-42375-0686 |
| 06 | 22-30-3060 | A-42375-0669 | 24 | 42375-0687 | A-42375-0687 |
| 07 | 42375-0670 | A-42375-0670 | 25 | 42375-0688 | A-42375-0688 |
| 08 | 42375-0671 | A-42375-0671 | 26 | 42375-0689 | A-42375-0689 |
| 09 | 42375-0672 | A-42375-0672 | 27 | 42375-0690 | A-42375-0690 |
| 10 | 42375-0673 | A-42375-0673 | 28 | 42375-0691 | A-42375-0691 |
| 11 | 42375-0674 | A-42375-0674 | 29 | 42375-0692 | A-42375-0692 |
| 12 | 22-30-3120 | A-42375-0675 | 30 | 42375-0693 | A-42375-0693 |
| 13 | 42375-0676 | A-42375-0676 | 31 | 42375-0694 | A-42375-0694 |
| 14 | 42375-0677 | A-42375-0677 | 32 | 42375-0695 | A-42375-0695 |
| 15 | 42375-0678 | A-42375-0678 | 33 | 42375-0696 | A-42375-0696 |
| 16 | 42375-0679 | A-42375-0679 | 34 | 42375-0697 | A-42375-0697 |
| 17 | 42375-0680 | A-42375-0680 | 35 | 42375-0698 | A-42375-0698 |
| 18 | 42375-0681 | A-42375-0681 | 36 | 42375-0699 | A-42375-0699 |
| 19 | 42375-0682 | A-42375-0682 | | | |
| | | | | | |

| ENG. NO: A-42375-0700/0732 | |
|---|---|
| HEADER NUMBER: | 42312-0036 |
| PIN NUMBER: | 42663-ADB208 |
| PIN LENGTH: L | .465 /11.81 |
| MATING LENGTH: M | .240 / 6.09 |
| GOLD POINT: G | .100 / 2.54 |
| PC TAIL LENGTH: P | .135 / 3.43 |
| TIN: T | .100 / 2.54 |
| CKTS: | 4-36 |
| KINKS: | SMES-42003 |
| VOIDED CKTS: | 4 |
| PACKAGING: | BULK PK-40873-0041 |

| CKTS | MATERIAL NUMBER | ENG NUMBER | CKTS | MATERIAL NUMBER | ENG NUMBER |
|---|---|---|---|---|---|
| 02 | | | 20 | 42375-0716 | A-42375-0716 |
| 03 | | | 21 | 42375-0717 | A-42375-0717 |
| 04 | 42375-0700 | A-42375-0700 | 22 | 42375-0718 | A-42375-0718 |
| 05 | 42375-0701 | A-42375-0701 | 23 | 42375-0719 | A-42375-0719 |
| 06 | 22-30-3061 | A-42375-0702 | 24 | 42375-0720 | A-42375-0720 |
| 07 | 42375-0703 | A-42375-0703 | 25 | 42375-0721 | A-42375-0721 |
| 08 | 42375-0704 | A-42375-0704 | 26 | 42375-0722 | A-42375-0722 |
| 09 | 42375-0705 | A-42375-0705 | 27 | 42375-0723 | A-42375-0723 |
| 10 | 42375-0706 | A-42375-0706 | 28 | 42375-0724 | A-42375-0724 |
| 11 | 42375-0707 | A-42375-0707 | 29 | 42375-0725 | A-42375-0725 |
| 12 | 42375-0708 | A-42375-0708 | 30 | 42375-0726 | A-42375-0726 |
| 13 | 42375-0709 | A-42375-0709 | 31 | 42375-0727 | A-42375-0727 |
| 14 | 42375-0710 | A-42375-0710 | 32 | 42375-0728 | A-42375-0728 |
| 15 | 42375-0711 | A-42375-0711 | 33 | 42375-0729 | A-42375-0729 |
| 16 | 42375-0712 | A-42375-0712 | 34 | 42375-0730 | A-42375-0730 |
| 17 | 42375-0713 | A-42375-0713 | 35 | 42375-0731 | A-42375-0731 |
| 18 | 42375-0714 | A-42375-0714 | 36 | 42375-0732 | A-42375-0732 |
| 19 | 42375-0715 | A-42375-0715 | | | |

| REV: | ECR/ECN INFORMATION: | TITLE: | SHEET No. |
|---|---|---|---|
| **U** | EC No.: **UCP2017-2793**<br>DATE: **12/20/2021** | **KK 100 HEADER ASSY FLAT VERTICAL BREAKAWAY** | **- 11 -** |

| DOCUMENT NUMBER: | CREATED / REVISED BY: | CHECKED BY: | APPROVED BY: |
|---|---|---|---|
| **SD- 42375-001** | **SS06** | **ISHWARG** | **ISHWARG** |

| ENG. NO: A-42375-0836/0870 | |
|---|---|
| HEADER NUMBER: | 42312-0036 |
| PIN NUMBER: | 42663-BSA154 |
| PIN LENGTH: L | .630 / 16.00 |
| MATING LENGTH: M | .405/10.29 |
| GOLD POINT: G | N/A |
| PC TAIL LENGTH: P | .135/3.43 |
| TIN: T | OVERALL |
| CKTS: | 2-36 |
| KINKS: | SMES-42003 |
| VOIDED CKTS: | NONE |
| PACKAGING: | BULK PK-40873-0041 |

| CKTS | MATERIAL NUMBER | ENG NUMBER | CKTS | MATERIAL NUMBER | ENG NUMBER |
|---|---|---|---|---|---|
| 02 | | A-42375-0836 | 20 | 22-30-3203 | A-42375-0854 |
| 03 | 22-30-3033 | A-42375-0837 | 21 | 22-30-3213 | A-42375-0855 |
| 04 | 22-30-3043 | A-42375-0838 | 22 | 22-30-3223 | A-42375-0856 |
| 05 | 22-30-3053 | A-42375-0839 | 23 | 22-30-3233 | A-42375-0857 |
| 06 | 22-30-3063 | A-42375-0840 | 24 | 22-30-3243 | A-42375-0858 |
| 07 | 22-30-3073 | A-42375-0841 | 25 | 22-30-3253 | A-42375-0859 |
| 08 | 22-30-3083 | A-42375-0842 | 26 | 22-30-3263 | A-42375-0860 |
| 09 | 22-30-3093 | A-42375-0843 | 27 | 22-30-3273 | A-42375-0861 |
| 10 | 22-30-3103 | A-42375-0844 | 28 | 22-30-3283 | A-42375-0862 |
| 11 | 22-30-3113 | A-42375-0845 | 29 | 22-30-3293 | A-42375-0863 |
| 12 | 22-30-3123 | A-42375-0846 | 30 | 22-30-3303 | A-42375-0864 |
| 13 | 22-30-3133 | A-42375-0847 | 31 | 22-30-3313 | A-42375-0865 |
| 14 | 22-30-3143 | A-42375-0848 | 32 | 22-30-3323 | A-42375-0866 |
| 15 | 22-30-3153 | A-42375-0849 | 33 | 22-30-3333 | A-42375-0867 |
| 16 | 22-30-3163 | A-42375-0850 | 34 | 22-30-3343 | A-42375-0868 |
| 17 | 22-30-3173 | A-42375-0851 | 35 | 22-30-3353 | A-42375-0869 |
| 18 | 22-30-3183 | A-42375-0852 | 36 | 22-30-3363 | A-42375-0870 |
| 19 | 22-30-3193 | A-42375-0853 | | | |
| | | | | | |

| REV: | ECR/ECN INFORMATION: | TITLE: | SHEET No. |
|---|---|---|---|
| **U** | EC No.: **UCP2017-2793**<br>DATE: **12/20/2021** | **KK 100 HEADER ASSY FLAT VERTICAL BREAKAWAY** | **- 12 -** |

| DOCUMENT NUMBER: | CREATED / REVISED BY: | CHECKED BY: | APPROVED BY: |
|---|---|---|---|
| **SD- 42375-001** | **SS06** | **ISHWARG** | **ISHWARG** |

| ENG. NO: A-42375-0871/0904 | |
|---|---|
| HEADER NUMBER: | 42312-0036 |
| PIN NUMBER: | 42663-ATA154 |
| PIN LENGTH: L | .530 / 13.46 |
| MATING LENGTH: M | .320 / 8.13 |
| GOLD POINT: G | N/A |
| PC TAIL LENGTH: P | .120 / 3.05 |
| TIN: T | OVERALL |
| CKTS: | 3-36 |
| KINKS: | NO |
| VOIDED CKTS: | 2 |
| PACKAGING: | BULK PK-40873-0041 |

| CKTS | MATERIAL NUMBER | ENG NUMBER | CKTS | MATERIAL NUMBER | ENG NUMBER |
|---|---|---|---|---|---|
| 02 | | | 20 | 22-30-3204 | A-42375-0888 |
| 03 | 22-30-3034 | A-42375-0871 | 21 | 22-30-3214 | A-42375-0889 |
| 04 | 22-30-3044 | A-42375-0872 | 22 | 22-30-3224 | A-42375-0890 |
| 05 | 22-30-3054 | A-42375-0873 | 23 | 22-30-3234 | A-42375-0891 |
| 06 | 22-30-3064 | A-42375-0874 | 24 | 22-30-3244 | A-42375-0892 |
| 07 | 22-30-3074 | A-42375-0875 | 25 | 22-30-3254 | A-42375-0893 |
| 08 | 22-30-3084 | A-42375-0876 | 26 | 22-30-3264 | A-42375-0894 |
| 09 | 22-30-3094 | A-42375-0877 | 27 | 22-30-3274 | A-42375-0895 |
| 10 | 22-30-3104 | A-42375-0878 | 28 | 22-30-3284 | A-42375-0896 |
| 11 | 22-30-3114 | A-42375-0879 | 29 | 22-30-3294 | A-42375-0897 |
| 12 | 22-30-3124 | A-42375-0880 | 30 | 22-30-3304 | A-42375-0898 |
| 13 | 22-30-3134 | A-42375-0881 | 31 | 22-30-3314 | A-42375-0899 |
| 14 | 22-30-3144 | A-42375-0882 | 32 | 22-30-3324 | A-42375-0900 |
| 15 | 22-30-3154 | A-42375-0883 | 33 | 22-30-3334 | A-42375-0901 |
| 16 | 22-30-3164 | A-42375-0884 | 34 | 22-30-3344 | A-42375-0902 |
| 17 | 22-30-3174 | A-42375-0885 | 35 | 22-30-3354 | A-42375-0903 |
| 18 | 22-30-3184 | A-42375-0886 | 36 | 22-30-3364 | A-42375-0904 |
| 19 | 22-30-3194 | A-42375-0887 | | | |
| | | | | | |

| ENG. NO: A-42375-0973/1001 | |
|---|---|
| HEADER NUMBER: | 42312-0036 |
| PIN NUMBER: | 42663-ABA154 |
| PIN LENGTH: L | .455 / 11.56 |
| MATING LENGTH: M | .240 / 6.09 |
| GOLD POINT: G | N/A |
| PC TAIL LENGTH: P | .125 / 3.18 |
| TIN: T | OVERALL |
| CKTS: | 8-36 |
| KINKS: | NO |
| VOIDED CKTS: | 3,8 |
| PACKAGING: | BULK PK-40873-0041 |

| CKTS | MATERIAL NUMBER | ENG NUMBER | CKTS | MATERIAL NUMBER | ENG NUMBER |
|---|---|---|---|---|---|
| 02 | | | 20 | 42375-0985 | A-42375-0985 |
| 03 | | | 21 | 42375-0986 | A-42375-0986 |
| 04 | | | 22 | 42375-0987 | A-42375-0987 |
| 05 | | | 23 | 42375-0988 | A-42375-0988 |
| 06 | | | 24 | 42375-0989 | A-42375-0989 |
| 07 | | | 25 | 42375-0990 | A-42375-0990 |
| 08 | 42375-0973 | A-42375-0973 | 26 | 42375-0991 | A-42375-0991 |
| 09 | 42375-0974 | A-42375-0974 | 27 | 42375-0992 | A-42375-0992 |
| 10 | 22-30-3107 | A-42375-0975 | 28 | 42375-0993 | A-42375-0993 |
| 11 | 42375-0976 | A-42375-0976 | 29 | 42375-0994 | A-42375-0994 |
| 12 | 42375-0977 | A-42375-0977 | 30 | 42375-0995 | A-42375-0995 |
| 13 | 42375-0978 | A-42375-0978 | 31 | 42375-0996 | A-42375-0996 |
| 14 | 42375-0979 | A-42375-0979 | 32 | 42375-0997 | A-42375-0997 |
| 15 | 42375-0980 | A-42375-0980 | 33 | 42375-0998 | A-42375-0998 |
| 16 | 42375-0981 | A-42375-0981 | 34 | 42375-0999 | A-42375-0999 |
| 17 | 42375-0982 | A-42375-0982 | 35 | 42375-1000 | A-42375-1000 |
| 18 | 42375-0983 | A-42375-0983 | 36 | 42375-1001 | A-42375-1001 |
| 19 | 42375-0984 | A-42375-0984 | | | |

| REV: | ECR/ECN INFORMATION: | TITLE: | SHEET No. |
|---|---|---|---|
| **U** | EC No.: **UCP2017-2793**<br>DATE: **12/20/2021** | **KK 100 HEADER ASSY<br>FLAT VERTICAL<br>BREAKAWAY** | **- 13 -** |

| DOCUMENT NUMBER: | CREATED / REVISED BY: | CHECKED BY: | APPROVED BY: |
|---|---|---|---|
| **SD- 42375-001** | **SS06** | **ISHWARG** | **ISHWARG** |

| ENG. NO: A-42375-1105/1139 | |
|---|---|
| HEADER NUMBER: | 42312-0036 |
| PIN NUMBER: | 42663-ABB208 |
| PIN LENGTH: L | .455 / 11.56 |
| MATING LENGTH: M | .240 / 6.09 |
| GOLD POINT: G | .100 / 2.54 |
| PC TAIL LENGTH: P | .125 / 3.18 |
| TIN: T | .100 / 2.54 |
| CKTS: | 2-36 |
| KINKS: | NO |
| VOIDED CKTS: | 2 |
| PACKAGING: | BULK PK-40873-0041 |

| CKTS | MATERIAL NUMBER | ENG NUMBER | CKTS | MATERIAL NUMBER | ENG NUMBER |
|---|---|---|---|---|---|
| 02 | 42375-1105 | A-42375-1105 | 20 | 42375-1123 | A-42375-1123 |
| 03 | 42375-1106 | A-42375-1106 | 21 | 42375-1124 | A-42375-1124 |
| 04 | 42375-1107 | A-42375-1107 | 22 | 42375-1125 | A-42375-1125 |
| 05 | 42375-1108 | A-42375-1108 | 23 | 42375-1126 | A-42375-1126 |
| 06 | 42375-1109 | A-42375-1109 | 24 | 42375-1127 | A-42375-1127 |
| 07 | 42375-1110 | A-42375-1110 | 25 | 42375-1128 | A-42375-1128 |
| 08 | 42375-1111 | A-42375-1111 | 26 | 42375-1129 | A-42375-1129 |
| 09 | 22-30-3099 | A-42375-1112 | 27 | 42375-1130 | A-42375-1130 |
| 10 | 42375-1113 | A-42375-1113 | 28 | 42375-1131 | A-42375-1131 |
| 11 | 42375-1114 | A-42375-1114 | 29 | 42375-1132 | A-42375-1132 |
| 12 | 42375-1115 | A-42375-1115 | 30 | 42375-1133 | A-42375-1133 |
| 13 | 42375-1116 | A-42375-1116 | 31 | 42375-1134 | A-42375-1134 |
| 14 | 42375-1117 | A-42375-1117 | 32 | 42375-1135 | A-42375-1135 |
| 15 | 42375-1118 | A-42375-1118 | 33 | 42375-1136 | A-42375-1136 |
| 16 | 42375-1119 | A-42375-1119 | 34 | 42375-1137 | A-42375-1137 |
| 17 | 42375-1120 | A-42375-1120 | 35 | 42375-1138 | A-42375-1138 |
| 18 | 42375-1121 | A-42375-1121 | 36 | 42375-1139 | A-42375-1139 |
| 19 | 42375-1122 | A-42375-1122 | | | |

| ENG. NO: 42375-1244/1278 | |
|---|---|
| HEADER NUMBER: | 42312-0036 |
| PIN NUMBER: | 42663-ABA154 |
| PIN LENGTH: L | .455 / 11.56 |
| MATING LENGTH: M | .240 / 6.09 |
| GOLD POINT: G | N/A |
| PC TAIL LENGTH: P | .125 / 3.18 |
| TIN: T | OVERALL |
| CKTS: | 2-36 |
| KINKS: | NO |
| VOIDED CKTS: | 2 |
| PACKAGING: | BULK PK-40873-0041 |

| CKTS | ITEM NUMBER | CKTS | ITEM NUMBER |
|---|---|---|---|
| 02 | 42375-1244 | 20 | 42375-1262 |
| 03 | 42375-1245 | 21 | 42375-1263 |
| 04 | 42375-1246 | 22 | 42375-1264 |
| 05 | 42375-1247 | 23 | 42375-1265 |
| 06 | 42375-1248 | 24 | 42375-1266 |
| 07 | 42375-1249 | 25 | 42375-1267 |
| 08 | 42375-1250 | 26 | 42375-1268 |
| 09 | 42375-1251 | 27 | 42375-1269 |
| 10 | 42375-1252 | 28 | 42375-1270 |
| 11 | 42375-1253 | 29 | 42375-1271 |
| 12 | 42375-1254 | 30 | 42375-1272 |
| 13 | 42375-1255 | 31 | 42375-1273 |
| 14 | 42375-1256 | 32 | 42375-1274 |
| 15 | 42375-1257 | 33 | 42375-1275 |
| 16 | 42375-1258 | 34 | 42375-1276 |
| 17 | 42375-1259 | 35 | 42375-1277 |
| 18 | 42375-1260 | 36 | 42375-1278 |
| 19 | 42375-1261 | | |

| REV: | ECR/ECN INFORMATION: | TITLE: | SHEET No. |
|---|---|---|---|
| **U** | EC No.: **UCP2017-2793**<br>DATE: **12/20/2021** | **KK 100 HEADER ASSY FLAT VERTICAL BREAKAWAY** | **- 14 -** |

| DOCUMENT NUMBER: | CREATED / REVISED BY: | CHECKED BY: | APPROVED BY: |
|---|---|---|---|
| **SD- 42375-001** | **SS06** | **ISHWARG** | **ISHWARG** |

| ENG. NO: 42375-1349/1382 | |
|---|---|
| HEADER NUMBER: | 42312-0036 |
| PIN NUMBER: | 42663-ABA154 |
| PIN LENGTH: L | .455 / 11.56 |
| MATING LENGTH: M | .230 / 5.84 |
| GOLD POINT: G | N/A |
| PC TAIL LENGTH: P | .135 / 3.43 |
| TIN: T | OVERALL |
| CKTS: | 3-36 |
| KINKS: | SMES-42003 |
| VOIDED CKTS: | 2 |
| PACKAGING: | BULK PK-40873-0041 |

| CKTS | ITEM NUMBER | CKTS | ITEM NUMBER |
|---|---|---|---|
| 02 | | 20 | 42375-1366 |
| 03 | 42375-1349 | 21 | 42375-1367 |
| 04 | 42375-1350 | 22 | 42375-1368 |
| 05 | 42375-1351 | 23 | 42375-1369 |
| 06 | 42375-1352 | 24 | 42375-1370 |
| 07 | 42375-1353 | 25 | 42375-1371 |
| 08 | 42375-1354 | 26 | 42375-1372 |
| 09 | 42375-1355 | 27 | 42375-1373 |
| 10 | 42375-1356 | 28 | 42375-1374 |
| 11 | 42375-1357 | 29 | 42375-1375 |
| 12 | 42375-1358 | 30 | 42375-1376 |
| 13 | 42375-1359 | 31 | 42375-1377 |
| 14 | 42375-1360 | 32 | 42375-1378 |
| 15 | 42375-1361 | 33 | 42375-1379 |
| 16 | 42375-1362 | 34 | 42375-1380 |
| 17 | 42375-1363 | 35 | 42375-1381 |
| 18 | 42375-1364 | 36 | 42375-1382 |
| 19 | 42375-1365 | | |

| ENG. NO: 42375-1515/1548 | |
|---|---|
| HEADER NUMBER: | 42312-0036 |
| PIN NUMBER: | 42663-ABB208 |
| PIN LENGTH: L | .455 / 11.56 |
| MATING LENGTH: M | .230 / 5.84 |
| GOLD POINT: G | .140 / 3.56 |
| PC TAIL LENGTH: P | .135 / 3.43 |
| TIN: T | .100 / 2.54 |
| CKTS: | 3-36 |
| KINKS: | SMES-42003 |
| VOIDED CKTS: | 2 |
| PACKAGING: | BULK PK-40873-0041 |

| CKTS | ITEM NUMBER | CKTS | ITEM NUMBER |
|---|---|---|---|
| 02 | | 20 | 42375-1532 |
| 03 | 42375-1515 | 21 | 42375-1533 |
| 04 | 42375-1516 | 22 | 42375-1534 |
| 05 | 42375-1517 | 23 | 42375-1535 |
| 06 | 42375-1518 | 24 | 42375-1536 |
| 07 | 42375-1519 | 25 | 42375-1537 |
| 08 | 42375-1520 | 26 | 42375-1538 |
| 09 | 42375-1521 | 27 | 42375-1539 |
| 10 | 42375-1522 | 28 | 42375-1540 |
| 11 | 42375-1523 | 29 | 42375-1541 |
| 12 | 42375-1524 | 30 | 42375-1542 |
| 13 | 42375-1525 | 31 | 42375-1543 |
| 14 | 42375-1526 | 32 | 42375-1544 |
| 15 | 42375-1527 | 33 | 42375-1545 |
| 16 | 42375-1528 | 34 | 42375-1546 |
| 17 | 42375-1529 | 35 | 42375-1547 |
| 18 | 42375-1530 | 36 | 42375-1548 |
| 19 | 42375-1531 | | |

| ENG. NO: 42375-1720/1753 | |
|---|---|
| HEADER NUMBER: | 42312-0036 |
| PIN NUMBER: | 42663-ABB208 |
| PIN LENGTH: L | .455 / 11.56 |
| MATING LENGTH: M | .240 / 6.09 |
| GOLD POINT: G | .140 / 3.56 |
| PC TAIL LENGTH: P | .125 / 3.18 |
| TIN: T | .100 / 2.54 |
| CKTS: | 3-36 |
| KINKS: | NO |
| VOIDED CKTS: | 3 |
| PACKAGING: | BULK PK-40873-0041 |

| CKTS | ITEM NUMBER | CKTS | ITEM NUMBER |
|---|---|---|---|
| 02 | | 20 | 42375-1737 |
| 03 | 42375-1720 | 21 | 42375-1738 |
| 04 | 42375-1721 | 22 | 42375-1739 |
| 05 | 42375-1722 | 23 | 42375-1740 |
| 06 | 42375-1723 | 24 | 42375-1741 |
| 07 | 42375-1724 | 25 | 42375-1742 |
| 08 | 42375-1725 | 26 | 42375-1743 |
| 09 | 42375-1726 | 27 | 42375-1744 |
| 10 | 42375-1727 | 28 | 42375-1745 |
| 11 | 42375-1728 | 29 | 42375-1746 |
| 12 | 42375-1729 | 30 | 42375-1747 |
| 13 | 42375-1730 | 31 | 42375-1748 |
| 14 | 42375-1731 | 32 | 42375-1749 |
| 15 | 42375-1732 | 33 | 42375-1750 |
| 16 | 42375-1733 | 34 | 42375-1751 |
| 17 | 42375-1734 | 35 | 42375-1752 |
| 18 | 42375-1735 | 36 | 42375-1753 |
| 19 | 42375-1736 | | |

| ENG. NO: 42375-1855/1889 | |
|---|---|
| HEADER NUMBER: | 42312-0036 |
| PIN NUMBER: | 42663-CJA154 |
| PIN LENGTH: L | .700 / 17.78 |
| MATING LENGTH: M | .488 / 12.40 |
| GOLD POINT: G | N/A |
| PC TAIL LENGTH: P | .122 / 3.10 |
| TIN: T | OVERALL |
| CKTS: | 2-36 |
| KINKS: | NO |
| VOIDED CKTS: | NONE |
| PACKAGING: | BULK PK-40873-0041 |

| CKTS | ITEM NUMBER | CKTS | ITEM NUMBER |
|---|---|---|---|
| 02 | 42375-1855 | 20 | 42375-1873 |
| 03 | 42375-1856 | 21 | 42375-1874 |
| 04 | 42375-1857 | 22 | 42375-1875 |
| 05 | 42375-1858 | 23 | 42375-1876 |
| 06 | 42375-1859 | 24 | 42375-1877 |
| 07 | 42375-1860 | 25 | 42375-1878 |
| 08 | 42375-1861 | 26 | 42375-1879 |
| 09 | 42375-1862 | 27 | 42375-1880 |
| 10 | 42375-1863 | 28 | 42375-1881 |
| 11 | 42375-1864 | 29 | 42375-1882 |
| 12 | 42375-1865 | 30 | 42375-1883 |
| 13 | 42375-1866 | 31 | 42375-1884 |
| 14 | 42375-1867 | 32 | 42375-1885 |
| 15 | 42375-1868 | 33 | 42375-1886 |
| 16 | 42375-1869 | 34 | 42375-1887 |
| 17 | 42375-1870 | 35 | 42375-1888 |
| 18 | 42375-1871 | 36 | 42375-1889 |
| 19 | 42375-1872 | | |

| REV: | ECR/ECN INFORMATION: | TITLE: | SHEET No. |
|---|---|---|---|
| **U** | EC No.: **UCP2017-2793**<br>DATE: **12/20/2021** | **KK 100 HEADER ASSY FLAT VERTICAL BREAKAWAY** | **- 16 -** |

| DOCUMENT NUMBER: | CREATED / REVISED BY: | CHECKED BY: | APPROVED BY: |
|---|---|---|---|
| **SD- 42375-001** | **SS06** | **ISHWARG** | **ISHWARG** |

| ENG. NO: 42375-1922/1956 | |
|---|---|
| HEADER NUMBER: | 42312-0036 |
| PIN NUMBER: | 42663-AEA154 |
| PIN LENGTH: L | .470 / 11.94 |
| MATING LENGTH: M | .190 / 4.83 |
| GOLD POINT: G | N/A |
| PC TAIL LENGTH: P | .190 / 4.83 |
| TIN: T | .200 / 5.08 |
| CKTS: | 2-36 |
| KINKS: | NO |
| VOIDED CKTS: | NONE |
| PACKAGING: | BULK PK-40873-0041 |

| CKTS | ITEM NUMBER | CKTS | ITEM NUMBER |
|---|---|---|---|
| 02 | 42375-1922 | 20 | 42375-1940 |
| 03 | 42375-1923 | 21 | 42375-1941 |
| 04 | 42375-1924 | 22 | 42375-1942 |
| 05 | 42375-1925 | 23 | 42375-1943 |
| 06 | 42375-1926 | 24 | 42375-1944 |
| 07 | 42375-1927 | 25 | 42375-1945 |
| 08 | 42375-1928 | 26 | 42375-1946 |
| 09 | 42375-1929 | 27 | 42375-1947 |
| 10 | 42375-1930 | 28 | 42375-1948 |
| 11 | 42375-1931 | 29 | 42375-1949 |
| 12 | 42375-1932 | 30 | 42375-1950 |
| 13 | 42375-1933 | 31 | 42375-1951 |
| 14 | 42375-1934 | 32 | 42375-1952 |
| 15 | 42375-1935 | 33 | 42375-1953 |
| 16 | 42375-1936 | 34 | 42375-1954 |
| 17 | 42375-1937 | 35 | 42375-1955 |
| 18 | 42375-1938 | 36 | 42375-1956 |
| 19 | 42375-1939 | | |

| ENG. NO: 42375-2246/2275 | |
|---|---|
| HEADER NUMBER: | 42312-0036 |
| PIN NUMBER: | 42663-ABA154 |
| PIN LENGTH: L | .455 / 11.56 |
| MATING LENGTH: M | .240 / 6.09 |
| GOLD POINT: G | N/A |
| PC TAIL LENGTH: P | .125 / 3.18 |
| TIN: T | OVERALL |
| CKTS: | 7-36 |
| KINKS: | NO |
| VOIDED CKTS: | 2,7 |
| PACKAGING: | BULK PK-40873-0041 |

| CKTS | ITEM NUMBER | CKTS | ITEM NUMBER |
|---|---|---|---|
| 02 | | 20 | 42375-2259 |
| 03 | | 21 | 42375-2260 |
| 04 | | 22 | 42375-2261 |
| 05 | | 23 | 42375-2262 |
| 06 | | 24 | 42375-2263 |
| 07 | 42375-2246 | 25 | 42375-2264 |
| 08 | 42375-2247 | 26 | 42375-2265 |
| 09 | 42375-2248 | 27 | 42375-2266 |
| 10 | 42375-2249 | 28 | 42375-2267 |
| 11 | 42375-2250 | 29 | 42375-2268 |
| 12 | 42375-2251 | 30 | 42375-2269 |
| 13 | 42375-2252 | 31 | 42375-2270 |
| 14 | 42375-2253 | 32 | 42375-2271 |
| 15 | 42375-2254 | 33 | 42375-2272 |
| 16 | 42375-2255 | 34 | 42375-2273 |
| 17 | 42375-2256 | 35 | 42375-2274 |
| 18 | 42375-2257 | 36 | 42375-2275 |
| 19 | 42375-2258 | | |

| REV: | ECR/ECN INFORMATION: | TITLE: | SHEET No. |
|---|---|---|---|
| **U** | EC No.: **UCP2017-2793**<br>DATE: **12/20/2021** | **KK 100 HEADER ASSY FLAT VERTICAL BREAKAWAY** | **- 17 -** |

| DOCUMENT NUMBER: | CREATED / REVISED BY: | CHECKED BY: | APPROVED BY: |
|---|---|---|---|
| **SD- 42375-001** | **SS06** | **ISHWARG** | **ISHWARG** |

| ENG. NO: 42375-2486/2520 | |
|---|---|
| HEADER NUMBER: | 42312-0036 |
| PIN NUMBER: | 42663-AFB208 |
| PIN LENGTH: L | .475 / 12.07 |
| MATING LENGTH: M | .232 / 5.89 |
| GOLD POINT: G | .150 / 3.81 |
| PC TAIL LENGTH: P | .153 / 3.89 |
| TIN: T | .100 / 2.54 |
| CKTS: | 2-36 |
| KINKS: | NO |
| VOIDED CKTS: | NONE |
| PACKAGING: | BULK PK-40873-0041 |

| CKTS | ITEM NUMBER | CKTS | ITEM NUMBER |
|---|---|---|---|
| 02 | 42375-2486 | 19 | 42375-2503 |
| 03 | 42375-2487 | 20 | 42375-2504 |
| | 68300-2008 | 21 | 42375-2505 |
| 04 | 42375-2488 | 22 | 42375-2506 |
| 05 | 42375-2489 | 23 | 42375-2507 |
| 06 | 42375-2490 | 24 | 42375-2508 |
| 07 | 42375-2491 | 25 | 42375-2509 |
| 08 | 42375-2492 | 26 | 42375-2510 |
| 09 | 42375-2493 | 27 | 42375-2511 |
| 10 | 42375-2494 | 28 | 42375-2512 |
| 11 | 42375-2495 | 29 | 42375-2513 |
| 12 | 42375-2496 | 30 | 42375-2514 |
| 13 | 42375-2497 | 31 | 42375-2515 |
| 14 | 42375-2498 | 32 | 42375-2516 |
| 15 | 42375-2499 | 33 | 42375-2517 |
| 16 | 42375-2500 | 34 | 42375-2518 |
| 17 | 42375-2501 | 35 | 42375-2519 |
| 18 | 42375-2502 | 36 | 42375-2520 |

| ENG. NO: 42375-2521/2555 | |
|---|---|
| HEADER NUMBER: | 42312-0036 |
| PIN NUMBER: | 42663-AFB228 |
| PIN LENGTH: L | .475 / 12.07 |
| MATING LENGTH: M | .232 / 5.89 |
| GOLD POINT: G | .150 / 3.81 |
| PC TAIL LENGTH: P | .153 / 3.89 |
| TIN: T | .100 / 2.54 |
| CKTS: | 2-36 |
| KINKS: | NO |
| VOIDED CKTS: | NONE |
| PACKAGING: | BULK PK-40873-0041 |

| CKTS | ITEM NUMBER | CKTS | ITEM NUMBER |
|---|---|---|---|
| 02 | 42375-2521 | 20 | 42375-2539 |
| 03 | 42375-2522 | 21 | 42375-2540 |
| 04 | 42375-2523 | 22 | 42375-2541 |
| 05 | 42375-2524 | 23 | 42375-2542 |
| 06 | 42375-2525 | 24 | 42375-2543 |
| 07 | 42375-2526 | 25 | 42375-2544 |
| 08 | 42375-2527 | 26 | 42375-2545 |
| 09 | 42375-2528 | 27 | 42375-2546 |
| 10 | 42375-2529 | 28 | 42375-2547 |
| 11 | 42375-2530 | 29 | 42375-2548 |
| 12 | 42375-2531 | 30 | 42375-2549 |
| 13 | 42375-2532 | 31 | 42375-2550 |
| 14 | 42375-2533 | 32 | 42375-2551 |
| 15 | 42375-2534 | 33 | 42375-2552 |
| 16 | 42375-2535 | 34 | 42375-2553 |
| 17 | 42375-2536 | 35 | 42375-2554 |
| 18 | 42375-2537 | 36 | 42375-2555 |
| 19 | 42375-2538 | | |

| REV: | ECR/ECN INFORMATION: | TITLE: | SHEET No. |
|---|---|---|---|
| **U** | EC No.: **UCP2017-2793**<br>DATE: **12/20/2021** | **KK 100 HEADER ASSY FLAT VERTICAL BREAKAWAY** | **- 18 -** |

| DOCUMENT NUMBER: | CREATED / REVISED BY: | CHECKED BY: | APPROVED BY: |
|---|---|---|---|
| **SD- 42375-001** | **SS06** | **ISHWARG** | **ISHWARG** |

| ENG. NO: 42375-2801/2835 | |
|---|---|
| HEADER NUMBER: | 42312-0036 |
| PIN NUMBER: | 42663-HDB228 |
| PIN LENGTH: L | 1.200 / 30.48 |
| MATING LENGTH: M | 1.000 / 25.40 |
| GOLD POINT: G | .200 / 5.08 |
| PC TAIL LENGTH: P | .110 / 2.79 |
| TIN: T | .200 / 5.08 |
| CKTS: | 2-36 |
| KINKS: | NO |
| VOIDED CKTS: | NONE |
| PACKAGING: | BULK PK-40873-0043 |

| CKTS | ITEM NUMBER | CKTS | ITEM NUMBER |
|---|---|---|---|
| 02 | 42375-2801 | 20 | 42375-2819 |
| 03 | 42375-2802 | 21 | 42375-2820 |
| 04 | 42375-2803 | 22 | 42375-2821 |
| 05 | 42375-2804 | 23 | 42375-2822 |
| 06 | 42375-2805 | 24 | 42375-2823 |
| 07 | 42375-2806 | 25 | 42375-2824 |
| 08 | 42375-2807 | 26 | 42375-2825 |
| 09 | 42375-2808 | 27 | 42375-2826 |
| 10 | 42375-2809 | 28 | 42375-2827 |
| 11 | 42375-2810 | 29 | 42375-2828 |
| 12 | 42375-2811 | 30 | 42375-2829 |
| 13 | 42375-2812 | 31 | 42375-2830 |
| 14 | 42375-2813 | 32 | 42375-2831 |
| 15 | 42375-2814 | 33 | 42375-2832 |
| 16 | 42375-2815 | 34 | 42375-2833 |
| 17 | 42375-2816 | 35 | 42375-2834 |
| 18 | 42375-2817 | 36 | 42375-2835 |
| 19 | 42375-2818 | | |

| ENG. NO: 42375-2836/2870 | |
|---|---|
| HEADER NUMBER: | 42312-0036 |
| PIN NUMBER: | 42663-EMA154 |
| PIN LENGTH: L | .925 / 23.50 |
| MATING LENGTH: M | .625 / 15.88 |
| GOLD POINT: G | N/A |
| PC TAIL LENGTH: P | .210 / 5.33 |
| TIN: T | OVERALL |
| CKTS: | 2-36 |
| KINKS: | NO |
| VOIDED CKTS: | NONE |
| PACKAGING: | BULK PK-40873-0041 |

| CKTS | ITEM NUMBER | CKTS | ITEM NUMBER |
|---|---|---|---|
| 02 | 42375-2836 | 20 | 42375-2854 |
| 03 | 42375-2837 | 21 | 42375-2855 |
| 04 | 42375-2838 | 22 | 42375-2856 |
| 05 | 42375-2839 | 23 | 42375-2857 |
| 06 | 42375-2840 | 24 | 42375-2858 |
| 07 | 42375-2841 | 25 | 42375-2859 |
| 08 | 42375-2842 | 26 | 42375-2860 |
| 09 | 42375-2843 | 27 | 42375-2861 |
| 10 | 42375-2844 | 28 | 42375-2862 |
| 11 | 42375-2845 | 29 | 42375-2863 |
| 12 | 42375-2846 | 30 | 42375-2864 |
| 13 | 42375-2847 | 31 | 42375-2865 |
| 14 | 42375-2848 | 32 | 42375-2866 |
| 15 | 42375-2849 | 33 | 42375-2867 |
| 16 | 42375-2850 | 34 | 42375-2868 |
| 17 | 42375-2851 | 35 | 42375-2869 |
| 18 | 42375-2852 | 36 | 42375-2870 |
| 19 | 42375-2853 | | |

| ENG. NO: 42375-3044/3078 | |
|---|---|
| HEADER NUMBER: | 42312-0036 |
| PIN NUMBER: | 42663-KHB208 |
| PIN LENGTH: L | 1.430 / 36.32 |
| MATING LENGTH: M | .867 / 22.02 |
| GOLD POINT: G | .200 / 5.08 |
| PC TAIL LENGTH: P | .473 / 12.01 |
| TIN: T | .200 / 5.08 |
| CKTS: | 2-36 |
| KINKS: | NO |
| VOIDED CKTS: | NONE |
| PACKAGING: | BULK PK-40873-0043 |

| CKTS | ITEM NUMBER | CKTS | ITEM NUMBER |
|---|---|---|---|
| 02 | 42375-3044 | 20 | 42375-3062 |
| 03 | 42375-3045 | 21 | 42375-3063 |
| 04 | 42375-3046 | 22 | 42375-3064 |
| 05 | 42375-3047 | 23 | 42375-3065 |
| 06 | 42375-3048 | 24 | 42375-3066 |
| 07 | 42375-3049 | 25 | 42375-3067 |
| 08 | 42375-3050 | 26 | 42375-3068 |
| 09 | 42375-3051 | 27 | 42375-3069 |
| 10 | 42375-3052 | 28 | 42375-3070 |
| 11 | 42375-3053 | 29 | 42375-3071 |
| 12 | 42375-3054 | 30 | 42375-3072 |
| 13 | 42375-3055 | 31 | 42375-3073 |
| 14 | 42375-3056 | 32 | 42375-3074 |
| 15 | 42375-3057 | 33 | 42375-3075 |
| 16 | 42375-3058 | 34 | 42375-3076 |
| 17 | 42375-3059 | 35 | 42375-3077 |
| 18 | 42375-3060 | 36 | 42375-3078 |
| 19 | 42375-3061 | | |

| ENG. NO: 42375-3114/3148 | |
|---|---|
| HEADER NUMBER: | 42312-0036 |
| PIN NUMBER: | 42663-BXA154 |
| PIN LENGTH: L | .645 / 16.38 |
| MATING LENGTH: M | .431 / 10.95 |
| GOLD POINT: G | N/A |
| PC TAIL LENGTH: P | .124 / 3.15 |
| TIN: T | OVERALL |
| CKTS: | 2-36 |
| KINKS: | NO |
| VOIDED CKTS: | NONE |
| PACKAGING: | BULK PK-40873-0041 |

| CKTS | ITEM NUMBER | CKTS | ITEM NUMBER |
|---|---|---|---|
| 02 | 42375-3114 | 20 | 42375-3132 |
| 03 | 42375-3115 | 21 | 42375-3133 |
| 04 | 42375-3116 | 22 | 42375-3134 |
| 05 | 42375-3117 | 23 | 42375-3135 |
| 06 | 42375-3118 | 24 | 42375-3136 |
| 07 | 42375-3119 | 25 | 42375-3137 |
| 08 | 42375-3120 | 26 | 42375-3138 |
| 09 | 42375-3121 | 27 | 42375-3139 |
| 10 | 42375-3122 | 28 | 42375-3140 |
| 11 | 42375-3123 | 29 | 42375-3141 |
| 12 | 42375-3124 | 30 | 42375-3142 |
| 13 | 42375-3125 | 31 | 42375-3143 |
| 14 | 42375-3126 | 32 | 42375-3144 |
| 15 | 42375-3127 | 33 | 42375-3145 |
| 16 | 42375-3128 | 34 | 42375-3146 |
| 17 | 42375-3129 | 35 | 42375-3147 |
| 18 | 42375-3130 | 36 | 42375-3148 |
| 19 | 42375-3131 | | |

| REV: | ECR/ECN INFORMATION: | TITLE: | SHEET No. |
|---|---|---|---|
| **U** | EC No.: **UCP2017-2793**<br>DATE: **12/20/2021** | **KK 100 HEADER ASSY FLAT VERTICAL BREAKAWAY** | **- 20 -** |

| DOCUMENT NUMBER: | CREATED / REVISED BY: | CHECKED BY: | APPROVED BY: |
|---|---|---|---|
| **SD- 42375-001** | **SS06** | **ISHWARG** | **ISHWARG** |

| ENG. NO: 42375-3149 / 3183 | |
|---|---|
| HEADER NUMBER: | 42312-0036 |
| PIN NUMBER: | 42663-BEB208 |
| PIN LENGTH: L | .575 / 14.61 |
| MATING LENGTH: M | .350 / 8.89 |
| GOLD POINT: G | .200 / 5.08 |
| PC TAIL LENGTH: P | .135 / 3.43 |
| TIN: T | .200 / 5.08 |
| CKTS: | 2-36 |
| KINKS: | NO |
| VOIDED CKTS: | NONE |
| PACKAGING: | BULK PK-40873-0041 |

| CKTS | ITEM NUMBER | CKTS | ITEM NUMBER |
|---|---|---|---|
| 02 | 42375-3149 | 20 | 42375-3167 |
| 03 | 42375-3150 | 21 | 42375-3168 |
| 04 | 42375-3151 | 22 | 42375-3169 |
| 05 | 42375-3152 | 23 | 42375-3170 |
| 06 | 42375-3153 | 24 | 42375-3171 |
| 07 | 42375-3154 | 25 | 42375-3172 |
| 08 | 42375-3155 | 26 | 42375-3173 |
| 09 | 42375-3156 | 27 | 42375-3174 |
| 10 | 42375-3157 | 28 | 42375-3175 |
| 11 | 42375-3158 | 29 | 42375-3176 |
| 12 | 42375-3159 | 30 | 42375-3177 |
| 13 | 42375-3160 | 31 | 42375-3178 |
| 14 | 42375-3161 | 32 | 42375-3179 |
| 15 | 42375-3162 | 33 | 42375-3180 |
| 16 | 42375-3163 | 34 | 42375-3181 |
| 17 | 42375-3164 | 35 | 42375-3182 |
| 18 | 42375-3165 | 36 | 42375-3183 |
| 19 | 42375-3166 | | |

| ENG. NO: 42375-3184 / 3218 | |
|---|---|
| HEADER NUMBER: | 42312-0036 |
| PIN NUMBER: | 42663-GNB208 |
| PIN LENGTH: L | 1.140 / 28.96 |
| MATING LENGTH: M | .913 / 23.20 |
| GOLD POINT: G | .200 / 5.08 |
| PC TAIL LENGTH: P | .137 / 3.48 |
| TIN: T | .200 / 5.08 |
| CKTS: | 2-36 |
| KINKS: | NO |
| VOIDED CKTS: | NONE |
| PACKAGING: | BULK PK-40873-0043 |

| CKTS | ITEM NUMBER | CKTS | ITEM NUMBER |
|---|---|---|---|
| 02 | 42375-3184 | 20 | 42375-3202 |
| 03 | 42375-3185 | 21 | 42375-3203 |
| 04 | 42375-3186 | 22 | 42375-3204 |
| 05 | 42375-3187 | 23 | 42375-3205 |
| 06 | 42375-3188 | 24 | 42375-3206 |
| 07 | 42375-3189 | 25 | 42375-3207 |
| 08 | 42375-3190 | 26 | 42375-3208 |
| 09 | 42375-3191 | 27 | 42375-3209 |
| 10 | 42375-3192 | 28 | 42375-3210 |
| 11 | 42375-3193 | 29 | 42375-3211 |
| 12 | 42375-3194 | 30 | 42375-3212 |
| 13 | 42375-3195 | 31 | 42375-3213 |
| 14 | 42375-3196 | 32 | 42375-3214 |
| 15 | 42375-3197 | 33 | 42375-3215 |
| 16 | 42375-3198 | 34 | 42375-3216 |
| 17 | 42375-3199 | 35 | 42375-3217 |
| 18 | 42375-3200 | 36 | 42375-3218 |
| 19 | 42375-3201 | | |

| ENG. NO: 42375-3219 / 3253 | |
|---|---|
| HEADER NUMBER: | 42312-0036 |
| PIN NUMBER: | 42663-BPA154 |
| PIN LENGTH: L | .620 / 15.75 |
| MATING LENGTH: M | .280 / 7.11 |
| GOLD POINT: G | NA |
| PC TAIL LENGTH: P | .250 / 6.35 |
| TIN: T | OVERALL |
| CKTS: | 2-36 |
| KINKS: | NO |
| VOIDED CKTS: | NONE |
| PACKAGING: | BULK PK-40873-0041 |

| CKTS | ITEM NUMBER | CKTS | ITEM NUMBER |
|---|---|---|---|
| 02 | 42375-3219 | 20 | 42375-3237 |
| 03 | 42375-3220 | 21 | 42375-3238 |
| 04 | 42375-3221 | 22 | 42375-3239 |
| 05 | 42375-3222 | 23 | 42375-3240 |
| 06 | 42375-3223 | 24 | 42375-3241 |
| 07 | 42375-3224 | 25 | 42375-3242 |
| 08 | 42375-3225 | 26 | 42375-3243 |
| 09 | 42375-3226 | 27 | 42375-3244 |
| 10 | 42375-3227 | 28 | 42375-3245 |
| 11 | 42375-3228 | 29 | 42375-3246 |
| 12 | 42375-3229 | 30 | 42375-3247 |
| 13 | 42375-3230 | 31 | 42375-3248 |
| 14 | 42375-3231 | 32 | 42375-3249 |
| 15 | 42375-3232 | 33 | 42375-3250 |
| 16 | 42375-3233 | 34 | 42375-3251 |
| 17 | 42375-3234 | 35 | 42375-3252 |
| 18 | 42375-3235 | 36 | 42375-3253 |
| 19 | 42375-3236 | | |

| ENG. NO: 42375-3254 / 3288 | |
|---|---|
| HEADER NUMBER: | 42312-0036 |
| PIN NUMBER: | 42663-DMA154 |
| PIN LENGTH: L | .820 / 20.83 |
| MATING LENGTH: M | .590 / 14.99 |
| GOLD POINT: G | NA |
| PC TAIL LENGTH: P | .140 / 3.56 |
| TIN: T | OVERALL |
| CKTS: | 2-36 |
| KINKS: | NO |
| VOIDED CKTS: | NONE |
| PACKAGING: | BULK PK-40873-0041 |

| CKTS | ITEM NUMBER | CKTS | ITEM NUMBER |
|---|---|---|---|
| 02 | 42375-3254 | 20 | 42375-3272 |
| 03 | 42375-3255 | 21 | 42375-3273 |
| 04 | 42375-3256 | 22 | 42375-3274 |
| 05 | 42375-3257 | 23 | 42375-3275 |
| 06 | 42375-3258 | 24 | 42375-3276 |
| 07 | 42375-3259 | 25 | 42375-3277 |
| 08 | 42375-3260 | 26 | 42375-3278 |
| 09 | 42375-3261 | 27 | 42375-3279 |
| 10 | 42375-3262 | 28 | 42375-3280 |
| 11 | 42375-3263 | 29 | 42375-3281 |
| 12 | 42375-3264 | 30 | 42375-3282 |
| 13 | 42375-3265 | 31 | 42375-3283 |
| 14 | 42375-3266 | 32 | 42375-3284 |
| 15 | 42375-3267 | 33 | 42375-3285 |
| 16 | 42375-3268 | 34 | 42375-3286 |
| 17 | 42375-3269 | 35 | 42375-3287 |
| 18 | 42375-3270 | 36 | 42375-3288 |
| 19 | 42375-3271 | | |

| ENG. NO: 42375-3289 / 3323 | |
|---|---|
| HEADER NUMBER: | 42312-0036 |
| PIN NUMBER: | 42663-FNA154 |
| PIN LENGTH: L | 1.035 / 26.29 |
| MATING LENGTH: M | .358 / 9.09 |
| GOLD POINT: G | NA |
| PC TAIL LENGTH: P | .587 / 14.91 |
| TIN: T | OVERALL |
| CKTS: | 2-36 |
| KINKS: | NO |
| VOIDED CKTS: | NONE |
| PACKAGING: | BULK PK-40873-0043 |

| CKTS | ITEM NUMBER | CKTS | ITEM NUMBER |
|---|---|---|---|
| 02 | 42375-3289 | 20 | 42375-3307 |
| 03 | 42375-3290 | 21 | 42375-3308 |
| 04 | 42375-3291 | 22 | 42375-3309 |
| 05 | 42375-3292 | 23 | 42375-3310 |
| 06 | 42375-3293 | 24 | 42375-3311 |
| 07 | 42375-3294 | 25 | 42375-3312 |
| 08 | 42375-3295 | 26 | 42375-3313 |
| 09 | 42375-3296 | 27 | 42375-3314 |
| 10 | 42375-3297 | 28 | 42375-3315 |
| 11 | 42375-3298 | 29 | 42375-3316 |
| 12 | 42375-3299 | 30 | 42375-3317 |
| 13 | 42375-3300 | 31 | 42375-3318 |
| 14 | 42375-3301 | 32 | 42375-3319 |
| 15 | 42375-3302 | 33 | 42375-3320 |
| 16 | 42375-3303 | 34 | 42375-3321 |
| 17 | 42375-3304 | 35 | 42375-3322 |
| 18 | 42375-3305 | 36 | 42375-3323 |
| 19 | 42375-3306 | | |

| ENG. NO: 42375-3324 / 3358 | |
|---|---|
| HEADER NUMBER: | 42312-0036 |
| PIN NUMBER: | 42663-CCA154 |
| PIN LENGTH: L | .670 / 17.02 |
| MATING LENGTH: M | .440 / 11.18 |
| GOLD POINT: G | NA |
| PC TAIL LENGTH: P | .140 / 3.56 |
| TIN: T | OVERALL |
| CKTS: | 2-36 |
| KINKS: | SMES-42003 |
| VOIDED CKTS: | NONE |
| PACKAGING: | BULK PK-40873-0041 |

| CKTS | ITEM NUMBER | CKTS | ITEM NUMBER |
|---|---|---|---|
| 02 | 42375-3324 | 20 | 42375-3342 |
| 03 | 42375-3325 | 21 | 42375-3343 |
| 04 | 42375-3326 | 22 | 42375-3344 |
| 05 | 42375-3327 | 23 | 42375-3345 |
| 06 | 42375-3328 | 24 | 42375-3346 |
| 07 | 42375-3329 | 25 | 42375-3347 |
| 08 | 42375-3330 | 26 | 42375-3348 |
| 09 | 42375-3331 | 27 | 42375-3349 |
| 10 | 42375-3332 | 28 | 42375-3350 |
| 11 | 42375-3333 | 29 | 42375-3351 |
| 12 | 42375-3334 | 30 | 42375-3352 |
| 13 | 42375-3335 | 31 | 42375-3353 |
| 14 | 42375-3336 | 32 | 42375-3354 |
| 15 | 42375-3337 | 33 | 42375-3355 |
| 16 | 42375-3338 | 34 | 42375-3356 |
| 17 | 42375-3339 | 35 | 42375-3357 |
| 18 | 42375-3340 | 36 | 42375-3358 |
| 19 | 42375-3341 | | |

| REV: | ECR/ECN INFORMATION: | TITLE: | SHEET No. |
|---|---|---|---|
| **U** | EC No.: **UCP2017-2793**<br>DATE: **12/20/2021** | **KK 100 HEADER ASSY FLAT VERTICAL BREAKAWAY** | **- 22 -** |

| DOCUMENT NUMBER: | CREATED / REVISED BY: | CHECKED BY: | APPROVED BY: |
|---|---|---|---|
| **SD- 42375-001** | **SS06** | **ISHWARG** | **ISHWARG** |

| ENG. NO: 42375-3359 / 3393 | |
|---|---|
| HEADER NUMBER: | 42312-0036 |
| PIN NUMBER: | 42663-ABB228 |
| PIN LENGTH: L | .455 / 11.56 |
| MATING LENGTH: M | .170 / 4.32 |
| GOLD POINT: G | .100 / 2.54 |
| PC TAIL LENGTH: P | .195 / 4.95 |
| TIN: T | .100 / 2.54 |
| CKTS: | 2-36 |
| KINKS: | NO |
| VOIDED CKTS: | NONE |
| PACKAGING: | BULK PK-40873-0041 |

| CKTS | ITEM NUMBER | CKTS | ITEM NUMBER |
|---|---|---|---|
| 02 | 42375-3359 | 20 | 42375-3377 |
| 03 | 42375-3360 | 21 | 42375-3378 |
| 04 | 42375-3361 | 22 | 42375-3379 |
| 05 | 42375-3362 | 23 | 42375-3380 |
| 06 | 42375-3363 | 24 | 42375-3381 |
| 07 | 42375-3364 | 25 | 42375-3382 |
| 08 | 42375-3365 | 26 | 42375-3383 |
| 09 | 42375-3366 | 27 | 42375-3384 |
| 10 | 42375-3367 | 28 | 42375-3385 |
| 11 | 42375-3368 | 29 | 42375-3386 |
| 12 | 42375-3369 | 30 | 42375-3387 |
| 13 | 42375-3370 | 31 | 42375-3388 |
| 14 | 42375-3371 | 32 | 42375-3389 |
| 15 | 42375-3372 | 33 | 42375-3390 |
| 16 | 42375-3373 | 34 | 42375-3391 |
| 17 | 42375-3374 | 35 | 42375-3392 |
| 18 | 42375-3375 | 36 | 42375-3393 |
| 19 | 42375-3376 | | |

| ENG. NO: 42375-3394 / 3428 | |
|---|---|
| HEADER NUMBER: | 42312-0036 |
| PIN NUMBER: | 42663-EZB208 |
| PIN LENGTH: L | .970/24.64 |
| MATING LENGTH: M | .780/19.81 |
| GOLD POINT: G | .200/5.08 |
| PC TAIL LENGTH: P | .100/ 2.54 |
| TIN: T | .200/5.08 |
| CKTS: | 2-36 |
| KINKS: | NO |
| VOIDED CKTS: | NONE |
| PACKAGING: | BULK PK-40873-0043 |

| CKTS | ITEM NUMBER | CKTS | ITEM NUMBER |
|---|---|---|---|
| 02 | 42375-3394 | 20 | 42375-3412 |
| 03 | 42375-3395 | 21 | 42375-3413 |
| 04 | 42375-3396 | 22 | 42375-3414 |
| 05 | 42375-3397 | 23 | 42375-3415 |
| 06 | 42375-3398 | 24 | 42375-3416 |
| 07 | 42375-3399 | 25 | 42375-3417 |
| 08 | 42375-3400 | 26 | 42375-3418 |
| 09 | 42375-3401 | 27 | 42375-3419 |
| 10 | 42375-3402 | 28 | 42375-3420 |
| 11 | 42375-3403 | 29 | 42375-3421 |
| 12 | 42375-3404 | 30 | 42375-3422 |
| 13 | 42375-3405 | 31 | 42375-3423 |
| 14 | 42375-3406 | 32 | 42375-3424 |
| 15 | 42375-3407 | 33 | 42375-3425 |
| 16 | 42375-3408 | 34 | 42374-3426 |
| 17 | 42375-3409 | 35 | 42375-3427 |
| 18 | 42375-3410 | 36 | 42375-3428 |
| 19 | 42375-3411 | | |

| ENG. NO: 42375-3429 / 3463 | |
|---|---|
| HEADER NUMBER: | 42312-0036 |
| PIN NUMBER: | 42663-ARA154 |
| PIN LENGTH: L | .520/13.21 |
| MATING LENGTH: M | .386/9.80 |
| GOLD POINT: G | N/A |
| PC TAIL LENGTH: P | .044/1.12 |
| TIN: T | OVERALL |
| CKTS: | 2-36 |
| KINKS: | NO |
| VOIDED CKTS: | NONE |
| PACKAGING: | BULK PK-40873-0041 |

| CKTS | ITEM NUMBER | CKTS | ITEM NUMBER |
|---|---|---|---|
| 02 | 42375-3429 | 20 | 42375-3447 |
| 03 | 42375-3430 | 21 | 42375-3448 |
| 04 | 42375-3431 | 22 | 42375-3449 |
| 05 | 42375-3432 | 23 | 42375-3450 |
| 06 | 42375-3433 | 24 | 42375-3451 |
| 07 | 42375-3434 | 25 | 42375-3452 |
| 08 | 42375-3435 | 26 | 42375-3453 |
| 09 | 42375-3436 | 27 | 42375-3454 |
| 10 | 42375-3437 | 28 | 42375-3455 |
| 11 | 42375-3438 | 29 | 42375-3456 |
| 12 | 42375-3439 | 30 | 42375-3457 |
| 13 | 42375-3440 | 31 | 42375-3458 |
| 14 | 42375-3441 | 32 | 42375-3459 |
| 15 | 42375-3442 | 33 | 42375-3460 |
| 16 | 42375-3443 | 34 | 42374-3461 |
| 17 | 42375-3444 | 35 | 42375-3462 |
| 18 | 42375-3445 | 36 | 42375-3463 |
| 19 | 42375-3446 | | |

| REV: | ECR/ECN INFORMATION: | TITLE: | SHEET No. |
|---|---|---|---|
| **U** | EC No.: **UCP2017-2793**<br>DATE: **12/20/2021** | **KK 100 HEADER ASSY FLAT VERTICAL BREAKAWAY** | **- 23 -** |

| DOCUMENT NUMBER: | CREATED / REVISED BY: | CHECKED BY: | APPROVED BY: |
|---|---|---|---|
| **SD- 42375-001** | **SS06** | **ISHWARG** | **ISHWARG** |

| ENG. NO: 42375-3464 / 3498 | | | |
|---|---|---|---|
| HEADER NUMBER: | 42312-0036 | | |
| PIN NUMBER: | 42663-CJA154 | | |
| PIN LENGTH: L | .700/17.78 | | |
| MATING LENGTH: M | .500/12.70 | | |
| GOLD POINT: G | N/A | | |
| PC TAIL LENGTH: P | .110/2.79 | | |
| TIN: T | OVERALL | | |
| CKTS: | 2-36 | | |
| KINKS: | NO | | |
| VOIDED CKTS: | # 2 | | |
| PACKAGING: | BULK PK-40873-0041 | | |
| CKTS | ITEM NUMBER | CKTS | ITEM NUMBER |
| 02 | 42375-3464 | 20 | 42375-3482 |
| 03 | 42375-3465 | 21 | 42375-3483 |
| 04 | 42375-3466 | 22 | 42375-3484 |
| 05 | 42375-3467 | 23 | 42375-3485 |
| 06 | 42375-3468 | 24 | 42375-3486 |
| 07 | 42375-3469 | 25 | 42375-3487 |
| 08 | 42375-3470 | 26 | 42375-3488 |
| 09 | 42375-3471 | 27 | 42375-3489 |
| 10 | 42375-3472 | 28 | 42375-3490 |
| 11 | 42375-3473 | 29 | 42375-3491 |
| 12 | 42375-3474 | 30 | 42375-3492 |
| 13 | 42375-3475 | 31 | 42375-3493 |
| 14 | 42375-3476 | 32 | 42375-3494 |
| 15 | 42375-3477 | 33 | 42375-3495 |
| 16 | 42375-3478 | 34 | 42375-3496 |
| 17 | 42375-3479 | 35 | 42375-3497 |
| 18 | 42375-3480 | 36 | 42375-3498 |
| 19 | 42375-3481 | | |

| ENG. NO: 42375-3499/3533 | | | |
|---|---|---|---|
| HEADER NUMBER: | 42312-0036 | | |
| PIN NUMBER: | 42663-ETA154 | | |
| PIN LENGTH: L | .950/24.13 | | |
| MATING LENGTH: M | .750/19.05 | | |
| GOLD POINT: G | N/A | | |
| PC TAIL LENGTH: P | .110/2.79 | | |
| TIN: T | OVERALL | | |
| CKTS: | 2-36 | | |
| KINKS: | NO | | |
| VOIDED CKTS: | NONE | | |
| PACKAGING: | BULK PK-40873-0043 | | |
| CKTS | ITEM NUMBER | CKTS | ITEM NUMBER |
| 02 | 42375-3499 | 20 | 42375-3517 |
| 03 | 42375-3500 | 21 | 42375-3518 |
| 04 | 42375-3501 | 22 | 42375-3519 |
| 05 | 42375-3502 | 23 | 42375-3520 |
| 06 | 42375-3503 | 24 | 42375-3521 |
| 07 | 42375-3504 | 25 | 42375-3522 |
| 08 | 42375-3505 | 26 | 42375-3523 |
| 09 | 42375-3506 | 27 | 42375-3524 |
| 10 | 42375-3507 | 28 | 42375-3525 |
| 11 | 42375-3508 | 29 | 42375-3526 |
| 12 | 42375-3509 | 30 | 42375-3527 |
| 13 | 42375-3510 | 31 | 42375-3528 |
| 14 | 42375-3511 | 32 | 42375-3529 |
| 15 | 42375-3512 | 33 | 42375-3530 |
| 16 | 42375-3513 | 34 | 42375-3531 |
| 17 | 42375-3514 | 35 | 42375-3532 |
| 18 | 42375-3515 | 36 | 42375-3533 |
| 19 | 42375-3516 | | |

| ENG. NO: 42375-3534/3568 | | | |
|---|---|---|---|
| HEADER NUMBER: | 42312-0036 | | |
| PIN NUMBER: | 42663-AWB208 | | |
| PIN LENGTH: L | .535/13.59 | | |
| MATING LENGTH: M | .235/5.97 | | |
| GOLD POINT: G | .200/5.08 | | |
| PC TAIL LENGTH: P | .210/5.33 | | |
| TIN: T | .100/2.54 | | |
| CKTS: | 2-36 | | |
| KINKS: | NO | | |
| VOIDED CKTS: | NONE | | |
| PACKAGING: | BULK PK-40873-0041 | | |
| CKTS | ITEM NUMBER | CKTS | ITEM NUMBER |
| 02 | 42375-3534 | 20 | 42375-3552 |
| 03 | 42375-3535 | 21 | 42375-3553 |
| 04 | 42375-3536 | 22 | 42375-3554 |
| 05 | 42375-3537 | 23 | 42375-3555 |
| 06 | 42375-3538 | 24 | 42375-3556 |
| 07 | 42375-3539 | 25 | 42375-3557 |
| 08 | 42375-3540 | 26 | 42375-3558 |
| 09 | 42375-3541 | 27 | 42375-3559 |
| 10 | 42375-3542 | 28 | 42375-3560 |
| 11 | 42375-3543 | 29 | 42375-3561 |
| 12 | 42375-3544 | 30 | 42375-3562 |
| 13 | 42375-3545 | 31 | 42375-3563 |
| 14 | 42375-3546 | 32 | 42375-3564 |
| 15 | 42375-3547 | 33 | 42375-3565 |
| 16 | 42375-3548 | 34 | 42375-3566 |
| 17 | 42375-3549 | 35 | 42375-3567 |
| 18 | 42375-3550 | 36 | 42375-3568 |
| 19 | 42375-3551 | | |

| REV: | ECR/ECN INFORMATION: | TITLE: | SHEET No. |
|---|---|---|---|
| **U** | EC No.: **UCP2017-2793**<br>DATE: **12/20/2021** | **KK 100 HEADER ASSY FLAT VERTICAL BREAKAWAY** | **- 24 -** |

| DOCUMENT NUMBER: | CREATED / REVISED BY: | CHECKED BY: | APPROVED BY: |
|---|---|---|---|
| **SD- 42375-001** | **SS06** | **ISHWARG** | **ISHWARG** |

| ENG. NO: A-42375-3569/3603 | |
|---|---|
| HEADER NUMBER: | 42312-0036 |
| PIN NUMBER: | 42663-ABB208 |
| PIN LENGTH: L | .455 / 11.56 |
| MATING LENGTH: M | .240 / 6.09 |
| GOLD POINT: G | .100 / 2.54 |
| PC TAIL LENGTH: P | .125 / 3.18 |
| TIN: T | .100 / 2.54 |
| CKTS: | 4-36 |
| KINKS: | NO |
| VOIDED CKTS: | 5 |
| PACKAGING: | BULK PK-40873-0041 |

| CKTS | MATERIAL NUMBER | ENG NUMBER | CKTS | MATERIAL NUMBER | ENG NUMBER |
|---|---|---|---|---|---|
| 02 | | | 20 | 423753587 | 42375-3587 |
| 03 | | | 21 | 423753588 | 42375-3588 |
| 04 | | | 22 | 423753589 | 42375-3589 |
| 05 | 423753572 | 42375-3572 | 23 | 423753590 | 42375-3590 |
| 06 | 423753573 | 42375-3573 | 24 | 423753591 | 42375-3591 |
| 07 | 423753574 | 42375-3574 | 25 | 423753592 | 42375-3592 |
| 08 | 423753575 | 42375-3575 | 26 | 423753593 | 42375-3593 |
| 09 | 423753576 | 42375-3576 | 27 | 423753594 | 42375-3594 |
| 10 | 423753577 | 42375-3577 | 28 | 423753595 | 42375-3595 |
| 11 | 423753578 | 42375-3578 | 29 | 423753596 | 42375-3596 |
| 12 | 423753579 | 42375-3579 | 30 | 423753597 | 42375-3597 |
| 13 | 423753580 | 42375-3580 | 31 | 423753598 | 42375-3598 |
| 14 | 423753581 | 42375-3581 | 32 | 423753599 | 42375-3599 |
| 15 | 423753582 | 42375-3582 | 33 | 423753600 | 42375-3600 |
| 16 | 423753583 | 42375-3583 | 34 | 423753601 | 42375-3601 |
| 17 | 423753584 | 42375-3584 | 35 | 423753602 | 42375-3602 |
| 18 | 423753585 | 42375-3585 | 36 | 423753603 | 42375-3603 |
| 19 | 423753586 | 42375-3586 | | | |

| ENG. NO: A-42375-2974/3008 | |
|---|---|
| HEADER NUMBER: | 42312-0036 |
| PIN NUMBER: | 42663-FKB228 |
| PIN LENGTH: L | 1.020 / 25.91 |
| MATING LENGTH: M | .805 / 20.45 |
| GOLD POINT: G | .200 / 5.08 |
| PC TAIL LENGTH: P | .125 / 3.18 |
| TIN: T | .200 / 5.08 |
| CKTS: | 2-36 |
| KINKS: | NO |
| VOIDED CKTS: | NONE |
| PACKAGING: | BULK PK-40873-0043 |

| CKTS | MATERIAL NUMBER | ENG NUMBER | CKTS | MATERIAL NUMBER | ITEM NUMBER |
|---|---|---|---|---|---|
| 02 | | | 20 | | |
| 03 | | | 21 | | |
| 04 | | | 22 | | |
| 05 | 423752977 | 42375-2977 | 23 | | |
| 06 | | | 24 | | |
| 07 | | | 25 | | |
| 08 | | | 26 | | |
| 09 | | | 27 | | |
| 10 | | | 28 | | |
| 11 | | | 29 | | |
| 12 | | | 30 | | |
| 13 | | | 31 | | |
| 14 | | | 32 | | |
| 15 | | | 33 | | |
| 16 | | | 34 | | |
| 17 | | | 35 | | |
| 18 | | | 36 | | |
| 19 | | | | | |

| REV: | ECR/ECN INFORMATION: | TITLE: | SHEET No. |
|---|---|---|---|
| **U** | EC No.: **UCP2017-2793**<br>DATE: **12/20/2021** | **KK 100 HEADER ASSY<br>FLAT VERTICAL<br>BREAKAWAY** | **- 25 -** |

| DOCUMENT NUMBER: | CREATED / REVISED BY: | CHECKED BY: | APPROVED BY: |
|---|---|---|---|
| **SD- 42375-001** | **SS06** | **ISHWARG** | **ISHWARG** |

| ENG. NO: A-42375-3604/3637 | |
|---|---|
| HEADER NUMBER: | 42312-0036 |
| PIN NUMBER: | 42663-AXA154 |
| PIN LENGTH: L | .540 / 13.72 |
| MATING LENGTH: M | .380 / 9.65 |
| GOLD POINT: G | N/A |
| PC TAIL LENGTH: P | .070 / 1.78 |
| TIN: T | OVERALL |
| CKTS: | 3-36 |
| KINKS: | NO |
| VOIDED CKTS: | 2 |
| PACKAGING: | BULK PK-40873-0041 |

| CKTS | MATERIAL NUMBER | ENG NUMBER | CKTS | MATERIAL NUMBER | ENG NUMBER |
|---|---|---|---|---|---|
| 02 | | | 20 | | |
| 03 | 42375-3604 | | 21 | | |
| 04 | | | 22 | | |
| 05 | | | 23 | | |
| 06 | | | 24 | | |
| 07 | | | 25 | | |
| 08 | | | 26 | | |
| 09 | | | 27 | | |
| 10 | | | 28 | | |
| 11 | | | 29 | | |
| 12 | | | 30 | | |
| 13 | | | 31 | | |
| 14 | | | 32 | | |
| 15 | | | 33 | | |
| 16 | | | 34 | | |
| 17 | | | 35 | | |
| 18 | | | 36 | | |
| 19 | | | | | |

| ENG. NO: A-42375-3638/3658 | |
|---|---|
| HEADER NUMBER: | 42312-0036 |
| PIN NUMBER: | 42663-ABA154 |
| PIN LENGTH: L | .455 / 11.56 |
| MATING LENGTH: M | .240 / 6.09 |
| GOLD POINT: G | N/A |
| PC TAIL LENGTH: P | .125 / 3.18 |
| TIN: T | OVERALL |
| CKTS: | 2-36 |
| KINKS: | NO |
| VOIDED CKTS: | 2, 4, 6, 8, 10, 12, 14, 16 |
| PACKAGING: | BULK PK-40873-0041 |

| CKTS | MATERIAL NUMBER | ENG NUMBER | CKTS | MATERIAL NUMBER | ITEM NUMBER |
|---|---|---|---|---|---|
| 02 | | | 20 | | |
| 03 | | | 21 | | |
| 04 | | | 22 | | |
| 05 | | | 23 | | |
| 06 | | | 24 | | |
| 07 | | | 25 | | |
| 08 | | | 26 | | |
| 09 | | | 27 | | |
| 10 | | | 28 | | |
| 11 | | | 29 | | |
| 12 | | | 30 | | |
| 13 | | | 31 | | |
| 14 | | | 32 | | |
| 15 | | | 33 | | |
| 16 | | | 34 | | |
| 17 | 423753639 | 42375-3639 | 35 | | |
| 18 | | | 36 | | |
| 19 | | | | | |

| REV: | ECR/ECN INFORMATION: | TITLE: | SHEET No. |
|---|---|---|---|
| **U** | EC No.: **UCP2017-2793**<br>DATE: **12/20/2021** | **KK 100 HEADER ASSY<br>FLAT VERTICAL<br>BREAKAWAY** | **- 26 -** |

| DOCUMENT NUMBER: | CREATED / REVISED BY: | CHECKED BY: | APPROVED BY: |
|---|---|---|---|
| **SD- 42375-001** | **SS06** | **ISHWARG** | **ISHWARG** |

| ENG. NO: 42375-3659/3693 | |
|---|---|
| HEADER NUMBER: | 42312-0036 |
| PIN NUMBER: | 42663-AXB208 |
| PIN LENGTH: L | .540 /13.72 |
| MATING LENGTH: M | .250 / 6.35 |
| GOLD POINT: G | .140 / 3.56 |
| PC TAIL LENGTH: P | .200 / 5.08 |
| TIN: T | .135 / 3.43 |
| CKTS: | 2-36 |
| KINKS: | NO |
| VOIDED CKTS: | NONE |
| PACKAGING: | BULK PK-40873-0041 |

| CKTS | MATERIAL NUMBER | ENG NUMBER | CKTS | MATERIAL NUMBER | ENG NUMBER |
|---|---|---|---|---|---|
| 02 | 68300-2000 | 42375-3659 | 20 | | 42375-3677 |
| 03 | 68300-2001 | 42375-3660 | 21 | | 42375-3678 |
| 04 | | 42375-3661 | 22 | | 42375-3679 |
| 05 | 68300-2006 | 42375-3662 | 23 | | 42375-3680 |
| 06 | | 42375-3663 | 24 | | 42375-3681 |
| 07 | | 42375-3664 | 25 | | 42375-3682 |
| 08 | | 42375-3665 | 26 | | 42375-3683 |
| 09 | | 42375-3666 | 27 | | 42375-3684 |
| 10 | | 42375-3667 | 28 | | 42375-3685 |
| 11 | | 42375-3668 | 29 | | 42375-3686 |
| 12 | | 42375-3669 | 30 | | 42375-3687 |
| 13 | | 42375-3670 | 31 | | 42375-3688 |
| 14 | | 42375-3671 | 32 | | 42375-3689 |
| 15 | | 42375-3672 | 33 | | 42375-3690 |
| 16 | | 42375-3673 | 34 | | 42375-3691 |
| 17 | | 42375-3674 | 35 | | 42375-3692 |
| 18 | | 42375-3675 | 36 | | 42375-3693 |
| 19 | | 42375-3676 | | | |

| ENG. NO: 42375-3694/3728 | |
|---|---|
| HEADER NUMBER: | 42312-0036 |
| PIN NUMBER: | 42663-AXB208 |
| PIN LENGTH: L | .540 / 13.72 |
| MATING LENGTH: M | .250 / 6.35 |
| GOLD POINT: G | .140 / 3.56 |
| PC TAIL LENGTH: P | .200 / 5.08 |
| TIN: T | .135 / 3.43 |
| CKTS: | 2-36 |
| KINKS: | NO |
| VOIDED CKTS: | 5 |
| PACKAGING: | BULK PK-40873-0041 |

| CKTS | MATERIAL NUMBER | ENG NUMBER | CKTS | MATERIAL NUMBER | ENG NUMBER |
|---|---|---|---|---|---|
| 02 | | 42375-3694 | 20 | | 42375-3712 |
| 03 | | 42375-3695 | 21 | | 42375-3713 |
| 04 | | 42375-3696 | 22 | | 42375-3714 |
| 05 | | 42375-3697 | 23 | | 42375-3715 |
| 06 | | 42375-3698 | 24 | | 42375-3716 |
| 07 | | 42375-3699 | 25 | | 42375-3717 |
| 08 | 68300-2002 | 42375-3700 | 26 | | 42375-3718 |
| 09 | | 42375-3701 | 27 | | 42375-3719 |
| 10 | | 42375-3702 | 28 | | 42375-3720 |
| 11 | | 42375-3703 | 29 | | 42375-3721 |
| 12 | | 42375-3704 | 30 | | 42375-3722 |
| 13 | | 42375-3705 | 31 | | 42375-3723 |
| 14 | | 42375-3706 | 32 | | 42375-3724 |
| 15 | | 42375-3707 | 33 | | 42375-3725 |
| 16 | | 42375-3708 | 34 | | 42375-3726 |
| 17 | | 42375-3709 | 35 | | 42375-3727 |
| 18 | | 42375-3710 | 36 | | 42375-3728 |
| 19 | | 42375-3711 | | | |

| REV: | ECR/ECN INFORMATION: | TITLE: | SHEET No. |
|---|---|---|---|
| **U** | EC No.: **UCP2017-2793**<br>DATE: **12/20/2021** | **KK 100 HEADER ASSY<br>FLAT VERTICAL<br>BREAKAWAY** | **- 27 -** |

| DOCUMENT NUMBER: | CREATED / REVISED BY: | CHECKED BY: | APPROVED BY: |
|---|---|---|---|
| **SD- 42375-001** | **SS06** | **ISHWARG** | **ISHWARG** |

| ENG. NO: 42375-3729/3763 | |
|---|---|
| HEADER NUMBER: | 42312-0036 |
| PIN NUMBER: | 42663-AFB208 |
| PIN LENGTH: L | .475 / 12.07 |
| MATING LENGTH: M | .232 / 5.89 |
| GOLD POINT: G | .150 / 3.81 |
| PC TAIL LENGTH: P | .153 / 3.89 |
| TIN: T | .150 / 3.81 |
| CKTS: | 2-36 |
| KINKS: | NO |
| VOIDED CKTS: | 5 |
| PACKAGING: | BULK PK-40873-0041 |

| CKTS | MATERIAL NUMBER | ENG NUMBER | CKTS | MATERIAL NUMBER | ENG NUMBER |
|---|---|---|---|---|---|
| 02 | | 42375-3729 | 20 | | 42375-3747 |
| 03 | | 42375-3730 | 21 | | 42375-3748 |
| 04 | | 42375-3731 | 22 | | 42375-3749 |
| 05 | | 42375-3732 | 23 | | 42375-3750 |
| 06 | | 42375-3733 | 24 | | 42375-3751 |
| 07 | | 42375-3734 | 25 | | 42375-3752 |
| 08 | 68300-2007 | 42375-3735 | 26 | | 42375-3753 |
| 09 | | 42375-3736 | 27 | | 42375-3754 |
| 10 | | 42375-3737 | 28 | | 42375-3755 |
| 11 | | 42375-3738 | 29 | | 42375-3756 |
| 12 | | 42375-3739 | 30 | | 42375-3757 |
| 13 | | 42375-3740 | 31 | | 42375-3758 |
| 14 | | 42375-3741 | 32 | | 42375-3759 |
| 15 | | 42375-3742 | 33 | | 42375-3760 |
| 16 | | 42375-3743 | 34 | | 42375-3761 |
| 17 | | 42375-3744 | 35 | | 42375-3762 |
| 18 | | 42375-3745 | 36 | | 42375-3763 |
| 19 | | 42375-3746 | | | |

| ENG. NO: 42375-3764/3798 | |
|---|---|
| HEADER NUMBER: | 42312-0036 |
| PIN NUMBER: | 42663-ETA154 |
| PIN LENGTH: L | .950/24.13 |
| MATING LENGTH: M | .750/19.05 |
| GOLD POINT: G | N/A |
| PC TAIL LENGTH: P | .110/2.79 |
| TIN: T | OVERALL |
| CKTS: | 2-36 |
| KINKS: | NO |
| VOIDED CKTS: | 2 |
| PACKAGING: | BULK PK-40873-0043 |

| CKTS | ITEM NUMBER | CKTS | ITEM NUMBER |
|---|---|---|---|
| 02 | | 20 | |
| 03 | | 21 | |
| 04 | | 22 | |
| 05 | | 23 | |
| 06 | | 24 | |
| 07 | | 25 | |
| 08 | 42375-3770 | 26 | |
| 09 | | 27 | |
| 10 | | 28 | |
| 11 | | 29 | |
| 12 | | 30 | |
| 13 | | 31 | |
| 14 | | 32 | |
| 15 | | 33 | |
| 16 | | 34 | |
| 17 | | 35 | |
| 18 | | 36 | |
| 19 | | | |

| REV: | ECR/ECN INFORMATION: | TITLE: | SHEET No. |
|---|---|---|---|
| **U** | EC No.: **UCP2017-2793**<br>DATE: **12/20/2021** | **KK 100 HEADER ASSY FLAT VERTICAL BREAKAWAY** | **- 28 -** |

| DOCUMENT NUMBER: | CREATED / REVISED BY: | CHECKED BY: | APPROVED BY: |
|---|---|---|---|
| **SD- 42375-001** | **SS06** | **ISHWARG** | **ISHWARG** |

| ENG. NO: 42375-3799/3832 | | | |
|---|---|---|---|
| HEADER NUMBER: | 42312-0036 | | |
| PIN NUMBER: | 42663-ABA154 | | |
| PIN LENGTH: L | .455 / 11.56 | | |
| MATING LENGTH: M | .240 / 6.09 | | |
| GOLD POINT: G | N/A | | |
| PC TAIL LENGTH: P | .125 / 3.18 | | |
| TIN: T | OVERALL | | |
| CKTS: | 3-36 | | |
| KINKS: | NO | | |
| VOIDED CKTS: | 3 | | |
| PACKAGING: | BULK PK-40873-0041 | | |
| CKTS | MATERIAL NUMBER | CKTS | MATERIAL NUMBER |
| 02 | | 20 | |
| 03 | | 21 | |
| 04 | | 22 | |
| 05 | 42375-3801 | 23 | |
| 06 | | 24 | |
| 07 | | 25 | |
| 08 | | 26 | |
| 09 | | 27 | |
| 10 | | 28 | |
| 11 | | 29 | |
| 12 | | 30 | |
| 13 | | 31 | |
| 14 | | 32 | |
| 15 | | 33 | |
| 16 | | 34 | |
| 17 | | 35 | |
| 18 | | 36 | |
| 19 | | | |

| ENG. NO: 42375-3733/3867 | | | |
|---|---|---|---|
| HEADER NUMBER: | 42312-0036 | | |
| PIN NUMBER: | 42663-ABB208 | | |
| PIN LENGTH: L | .455 / 11.56 | | |
| MATING LENGTH: M | .250 / 6.35 | | |
| GOLD POINT: G | .100 / 2.54 | | |
| PC TAIL LENGTH: P | .115 / 2.92 | | |
| TIN: T | .100 / 2.54 | | |
| CKTS: | 2-36 | | |
| KINKS: | NO | | |
| VOIDED CKTS: | NONE | | |
| PACKAGING: | BULK PK-40873-0041 | | |
| CKTS | MATERIAL NUMBER | CKTS | MATERIAL NUMBER |
| 02 | | 20 | |
| 03 | | 21 | |
| 04 | | 22 | |
| 05 | 42375-3836 | 23 | |
| 06 | | 24 | |
| 07 | | 25 | |
| 08 | | 26 | |
| 09 | | 27 | |
| 10 | | 28 | |
| 11 | | 29 | |
| 12 | | 30 | |
| 13 | | 31 | |
| 14 | | 32 | |
| 15 | | 33 | |
| 16 | | 34 | |
| 17 | | 35 | |
| 18 | | 36 | |
| 19 | | | |

| ENG. NO: 42375-3868 / 3902 | | | |
|---|---|---|---|
| HEADER NUMBER: | 42312-0036 | | |
| PIN NUMBER: | 42663-DWA154 | | |
| PIN LENGTH: L | .850 / 21.59 | | |
| MATING LENGTH: M | .640 / 16.26 | | |
| GOLD POINT: G | N/A | | |
| PC TAIL LENGTH: P | .120 / 3.05 | | |
| TIN: T | OVERALL | | |
| CKTS: | 2-36 | | |
| KINKS: | NO | | |
| VOIDED CKTS: | NONE | | |
| PACKAGING: | BULK PK-40873-0041 | | |
| CKTS | ITEM NUMBER | CKTS | ITEM NUMBER |
| 02 | | 20 | |
| 03 | | 21 | |
| 04 | 42375-3870 | 22 | |
| 05 | | 23 | |
| 06 | 42375-3872 | 24 | |
| 07 | | 25 | |
| 08 | | 26 | |
| 09 | | 27 | |
| 10 | | 28 | |
| 11 | | 29 | |
| 12 | | 30 | |
| 13 | | 31 | |
| 14 | | 32 | |
| 15 | | 33 | |
| 16 | | 34 | |
| 17 | | 35 | |
| 18 | | 36 | |
| 19 | | | |

| REV: | ECR/ECN INFORMATION: | TITLE: | SHEET No. |
|---|---|---|---|
| **U** | EC No.: **UCP2017-2793**<br>DATE: **12/20/2021** | **KK 100 HEADER ASSY FLAT VERTICAL BREAKAWAY** | **- 29 -** |

| DOCUMENT NUMBER: | CREATED / REVISED BY: | CHECKED BY: | APPROVED BY: |
|---|---|---|---|
| **SD- 42375-001** | **SS06** | **ISHWARG** | **ISHWARG** |

| ENG. NO: 42375-3903/3932 | | | |
|---|---|---|---|
| HEADER NUMBER: | 42312-0036 | | |
| PIN NUMBER: | 42663-BSA154 | | |
| PIN LENGTH: L | .630 / 16.00 | | |
| MATING LENGTH: M | .421 / 10.69 | | |
| GOLD POINT: G | N/A | | |
| PC TAIL LENGTH: P | .119 / 3.02 | | |
| TIN: T | OVERALL | | |
| CKTS: | 7-36 | | |
| KINKS: | NO | | |
| VOIDED CKTS: | 7 | | |
| PACKAGING: | BULK PK-40873-0041 | | |
| CKTS | MATERIAL NUMBER | CKTS | MATERIAL NUMBER |
| 02 | | 20 | |
| 03 | | 21 | |
| 04 | | 22 | |
| 05 | | 23 | |
| 06 | | 24 | |
| 07 | | 25 | |
| 08 | 42375-3904 | 26 | |
| 09 | | 27 | |
| 10 | | 28 | |
| 11 | | 29 | |
| 12 | | 30 | |
| 13 | | 31 | |
| 14 | | 32 | |
| 15 | | 33 | |
| 16 | | 34 | |
| 17 | | 35 | |
| 18 | | 36 | |
| 19 | | | |

| ENG. NO: 42375-3933/3964 | | | |
|---|---|---|---|
| HEADER NUMBER: | 42312-0036 | | |
| PIN NUMBER: | 42663-BSA154 | | |
| PIN LENGTH: L | .630 / 16.00 | | |
| MATING LENGTH: M | .405/10.29 | | |
| GOLD POINT: G | N/A | | |
| PC TAIL LENGTH: P | .135/3.43 | | |
| TIN: T | OVERALL | | |
| CKTS: | 5-36 | | |
| KINKS: | SMES-42003 | | |
| VOIDED CKTS: | 5 | | |
| PACKAGING: | BULK PK-40873-0041 | | |
| CKTS | MATERIAL NUMBER | CKTS | MATERIAL NUMBER |
| 02 | | 20 | |
| 03 | | 21 | |
| 04 | | 22 | |
| 05 | | 23 | |
| 06 | | 24 | |
| 07 | | 25 | |
| 08 | | 26 | |
| 09 | 42375-3937 | 27 | |
| 10 | | 28 | |
| 11 | | 29 | |
| 12 | | 30 | |
| 13 | | 31 | |
| 14 | | 32 | |
| 15 | | 33 | |
| 16 | | 34 | |
| 17 | | 35 | |
| 18 | | 36 | |
| 19 | | | |

| ENG. NO: 42375-3965/3995 | | | |
|---|---|---|---|
| HEADER NUMBER: | 42312-0036 | | |
| PIN NUMBER: | 42663-BSA154 | | |
| PIN LENGTH: L | .630 / 16.00 | | |
| MATING LENGTH: M | .405/10.29 | | |
| GOLD POINT: G | N/A | | |
| PC TAIL LENGTH: P | .135/3.43 | | |
| TIN: T | OVERALL | | |
| CKTS: | 6-36 | | |
| KINKS: | SMES-42003 | | |
| VOIDED CKTS: | 4, 5, 6 | | |
| PACKAGING: | BULK PK-40873-0041 | | |
| CKTS | MATERIAL NUMBER | CKTS | MATERIAL NUMBER |
| 02 | | 20 | |
| 03 | | 21 | |
| 04 | | 22 | |
| 05 | | 23 | |
| 06 | | 24 | |
| 07 | | 25 | |
| 08 | | 26 | |
| 09 | 42375-3968 | 27 | |
| 10 | | 28 | |
| 11 | | 29 | |
| 12 | | 30 | |
| 13 | | 31 | |
| 14 | | 32 | |
| 15 | | 33 | |
| 16 | | 34 | |
| 17 | | 35 | |
| 18 | | 36 | |
| 19 | | | |

| REV: | ECR/ECN INFORMATION: | TITLE: | SHEET No. |
|---|---|---|---|
| U | EC No.: UCP2017-2793<br>DATE: 12/20/2021 | KK 100 HEADER ASSY<br>FLAT VERTICAL<br>BREAKAWAY | - 30 - |

| DOCUMENT NUMBER: | CREATED / REVISED BY: | CHECKED BY: | APPROVED BY: |
|---|---|---|---|
| SD- 42375-001 | SS06 | ISHWARG | ISHWARG |

| ENG. NO: A-42375-3996/4030 | | | |
|---|---|---|---|
| HEADER NUMBER: | 42312-0036 | | |
| PIN NUMBER: | 42663-AXA154 | | |
| PIN LENGTH: L | .540 / 13.72 | | |
| MATING LENGTH: M | .390 / 9.91 | | |
| GOLD POINT: G | N/A | | |
| PC TAIL LENGTH: P | .060 / 1.52 | | |
| TIN: T | OVERALL | | |
| CKTS: | 2-36 | | |
| KINKS: | NO | | |
| VOIDED CKTS: | NONE | | |
| PACKAGING: | BULK PK-40873-0041 | | |
| CKTS | ITEM NUMBER | CKTS | ITEM NUMBER |
| 02 | | 20 | |
| 03 | | 21 | |
| 04 | | 22 | |
| 05 | | 23 | |
| 06 | 42375-4000 | 24 | |
| 07 | 42375-4001 | 25 | |
| 08 | | 26 | |
| 09 | | 27 | |
| 10 | | 28 | |
| 11 | | 29 | |
| 12 | | 30 | |
| 13 | | 31 | |
| 14 | | 32 | |
| 15 | | 33 | |
| 16 | | 34 | |
| 17 | | 35 | |
| 18 | | 36 | |
| 19 | | | |

| ENG. NO: 42375-4031/4059 | | | |
|---|---|---|---|
| HEADER NUMBER: | 42312-0036 | | |
| PIN NUMBER: | 42663-ABA154 | | |
| PIN LENGTH: L | .455 / 11.56 | | |
| MATING LENGTH: M | .240 / 6.09 | | |
| GOLD POINT: G | N/A | | |
| PC TAIL LENGTH: P | .125 / 3.18 | | |
| TIN: T | OVERALL | | |
| CKTS: | 8-36 | | |
| KINKS: | NO | | |
| VOIDED CKTS: | 2, 4, 6, 8 | | |
| PACKAGING: | BULK PK-40873-0041 | | |
| CKTS | MATERIAL NUMBER | CKTS | MATERIAL NUMBER |
| 02 | | 20 | |
| 03 | | 21 | |
| 04 | | 22 | |
| 05 | | 23 | |
| 06 | | 24 | |
| 07 | | 25 | |
| 08 | | 26 | |
| 09 | 42375-4032 | 27 | |
| 10 | | 28 | |
| 11 | | 29 | |
| 12 | | 30 | |
| 13 | | 31 | |
| 14 | | 32 | |
| 15 | | 33 | |
| 16 | | 34 | |
| 17 | | 35 | |
| 18 | | 36 | |
| 19 | | | |

| ENG. NO: 42375-4060 / 4094 | | | |
|---|---|---|---|
| HEADER NUMBER: | 42312-0036 | | |
| PIN NUMBER: | 42663-CGA154 | | |
| PIN LENGTH: L | .690 / 17.53 | | |
| MATING LENGTH: M | .521 / 13.23 | | |
| GOLD POINT: G | N/A | | |
| PC TAIL LENGTH: P | .079 / 2.01 | | |
| TIN: T | OVERALL | | |
| CKTS: | 2-36 | | |
| KINKS: | NO | | |
| VOIDED CKTS: | NONE | | |
| PACKAGING: | BULK PK-40873-0041 | | |
| CKTS | MATERIAL NUMBER | CKTS | MATERIAL NUMBER |
| 02 | | 20 | |
| 03 | | 21 | |
| 04 | | 22 | |
| 05 | | 23 | |
| 06 | 42375-4064 | 24 | |
| 07 | | 25 | |
| 08 | | 26 | |
| 09 | | 27 | |
| 10 | | 28 | |
| 11 | | 29 | |
| 12 | | 30 | |
| 13 | | 31 | |
| 14 | | 32 | |
| 15 | | 33 | |
| 16 | | 34 | |
| 17 | | 35 | |
| 18 | | 36 | |
| 19 | | | |

| REV: | ECR/ECN INFORMATION: | TITLE: | SHEET No. |
|---|---|---|---|
| **U** | EC No.: **UCP2017-2793**<br>DATE: **12/20/2021** | **KK 100 HEADER ASSY<br>FLAT VERTICAL<br>BREAKAWAY** | **- 31 -** |

| DOCUMENT NUMBER: | CREATED / REVISED BY: | CHECKED BY: | APPROVED BY: |
|---|---|---|---|
| **SD- 42375-001** | **SS06** | **ISHWARG** | **ISHWARG** |

| ENG. NO: A-42375-4095/4129 | | | |
|---|---|---|---|
| HEADER NUMBER: | 42312-0036 | | |
| PIN NUMBER: | 42663-DEB228 | | |
| PIN LENGTH: L | .785 / 19.94 | | |
| MATING LENGTH: M | .470 / 11.94 | | |
| GOLD POINT: G | .250 / 6.35 | | |
| PC TAIL LENGTH: P | .225 / 5.72 | | |
| TIN: T | .200 / 5.08 | | |
| CKTS: | 2-36 | | |
| KINKS: | NO | | |
| VOIDED CKTS: | NONE | | |
| PACKAGING: | BULK PK-40873-0041 | | |
| CKTS | ITEM NUMBER | CKTS | ITEM NUMBER |
| 02 | | 20 | |
| 03 | | 21 | |
| 04 | | 22 | |
| 05 | | 23 | |
| 06 | | 24 | |
| 07 | | 25 | |
| 08 | | 26 | |
| 09 | | 27 | |
| 10 | 42375-4103 | 28 | |
| 11 | | 29 | |
| 12 | | 30 | |
| 13 | | 31 | |
| 14 | | 32 | |
| 15 | | 33 | |
| 16 | | 34 | |
| 17 | | 35 | |
| 18 | 42375-4111 | 36 | |
| 19 | | | |

| ENG. NO: A-42375-4130/4161 | | | |
|---|---|---|---|
| HEADER NUMBER: | 42312-0036 | | |
| PIN NUMBER: | 42663-ATA154 | | |
| PIN LENGTH: L | .530/13.46 | | |
| MATING LENGTH: M | .320/8.13 | | |
| GOLD POINT: G | N/A | | |
| PC TAIL LENGTH: P | .120/3.05 | | |
| TIN: T | OVERALL | | |
| CKTS: | 5-36 | | |
| KINKS: | SMES-42003 | | |
| VOIDED CKTS: | 2, 3, 4 | | |
| PACKAGING: | BULK PK-40873-0041 | | |
| CKTS | ITEM NUMBER | CKTS | ITEM NUMBER |
| | | 20 | |
| | | 21 | |
| | | 22 | |
| 05 | 42375-4130 | 23 | |
| 06 | | 24 | |
| 07 | | 25 | |
| 08 | | 26 | |
| 09 | | 27 | |
| 10 | | 28 | |
| 11 | | 29 | |
| 12 | | 30 | |
| 13 | | 31 | |
| 14 | | 32 | |
| 15 | | 33 | |
| 16 | | 34 | |
| 17 | | 35 | |
| 18 | | 36 | |
| 19 | | | |

| ENG. NO: 42375-4162/4196 | | | |
|---|---|---|---|
| HEADER NUMBER: | 42312-0036 | | |
| PIN NUMBER: | 42663-BSC228 | | |
| PIN LENGTH: L | .630/16.00 | | |
| MATING LENGTH: M | .400/10.16 | | |
| GOLD POINT: G | .345/8.76 | | |
| PC TAIL LENGTH: P | .140/3.56 | | |
| TIN: T | .100/2.54 | | |
| CKTS: | 2-36 | | |
| KINKS: | NO | | |
| VOIDED CKTS: | NONE | | |
| PACKAGING: | BULK PK-40873-0041 | | |
| CKTS | MATERIAL NUMBER | CKTS | MATERIAL NUMBER |
| 02 | | 20 | |
| 03 | | 21 | |
| 04 | 42375-4164 | 22 | |
| 05 | 42375-4165 | 23 | |
| 06 | | 24 | |
| 07 | | 25 | |
| 08 | | 26 | |
| 09 | | 27 | |
| 10 | 42375-4170 | 28 | |
| 11 | | 29 | |
| 12 | | 30 | |
| 13 | | 31 | |
| 14 | | 32 | |
| 15 | | 33 | |
| 16 | | 34 | |
| 17 | | 35 | |
| 18 | | 36 | |
| 19 | | | |

| REV: | ECR/ECN INFORMATION: | TITLE: | SHEET No. |
|---|---|---|---|
| U | EC No.: UCP2017-2793<br>DATE: 12/20/2021 | KK 100 HEADER ASSY<br>FLAT VERTICAL<br>BREAKAWAY | - 32 - |

| DOCUMENT NUMBER: | CREATED / REVISED BY: | CHECKED BY: | APPROVED BY: |
|---|---|---|---|
| SD- 42375-001 | SS06 | ISHWARG | ISHWARG |

| ENG. NO: A-42375-1622 | | | |
|---|---|---|---|
| HEADER NUMBER: | 42312-0036 | | |
| PIN NUMBER: | 42663-AYB208 | | |
| PIN LENGTH: L | .545 / 13.84 | | |
| MATING LENGTH: M | .320 / 8.13 | | |
| GOLD POINT: G | .140 / 3.56 | | |
| PC TAIL LENGTH: P | .135 / 3.43 | | |
| TIN: T | .135 / 3.43 | | |
| CKTS: | 2-36 | | |
| KINKS: | SMES-42003 | | |
| VOIDED CKTS: | 3 | | |
| PACKAGING: | BULK | PK-40873-0041 | |
| CKTS | MATERIAL NUMBER | CKTS | MATERIAL NUMBER |
| 02 | | 20 | |
| 03 | | 21 | |
| 04 | | 22 | |
| 05 | | 23 | |
| 06 | | 24 | |
| 07 | | 25 | |
| 08 | | 26 | |
| 09 | 42375-1622 | 27 | |
| 10 | | 28 | |
| 11 | | 29 | |
| 12 | | 30 | |
| 13 | | 31 | |
| 14 | | 32 | |
| 15 | | 33 | |
| 16 | | 34 | |
| 17 | | 35 | |
| 18 | | 36 | |
| 19 | | | |

| ENG. NO: A-42375-4199 | | | |
|---|---|---|---|
| HEADER NUMBER: | 42312-0036 | | |
| PIN NUMBER: | 42663-ARB228 | | |
| PIN LENGTH: L | .520 / 13.21 | | |
| MATING LENGTH: M | .230 / 5.84 | | |
| GOLD POINT: G | .140 / 3.56 | | |
| PC TAIL LENGTH: P | .200 / 5.08 | | |
| TIN: T | .135 / 3.43 | | |
| CKTS: | 2-36 | | |
| KINKS: | NO | | |
| VOIDED CKTS: | NONE | | |
| PACKAGING: | BULK | PK-40873-0041 | |
| CKTS | MATERIAL NUMBER | CKTS | MATERIAL NUMBER |
| 02 | 42375-4199 | 20 | |
| 03 | | 21 | |
| 04 | | 22 | |
| 05 | | 23 | |
| 06 | | 24 | |
| 07 | | 25 | |
| 08 | | 26 | |
| 09 | | 27 | |
| 10 | | 28 | |
| 11 | | 29 | |
| 12 | | 30 | |
| 13 | | 31 | |
| 14 | | 32 | |
| 15 | | 33 | |
| 16 | | 34 | |
| 17 | | 35 | |
| 18 | | 36 | |
| 19 | | | |

| ENG. NO: A-42375-4200 | | | |
|---|---|---|---|
| HEADER NUMBER: | 42312-0036 | | |
| PIN NUMBER: | 42663-ADB208 | | |
| PIN LENGTH: L | .465 / 11.81 | | |
| MATING LENGTH: M | .240 / 6.09 | | |
| GOLD POINT: G | .100 / 2.54 | | |
| PC TAIL LENGTH: P | .135 / 3.43 | | |
| TIN: T | .100 / 2.54 | | |
| CKTS: | 2-36 | | |
| KINKS: | SMES-42003 | | |
| VOIDED CKTS: | 3, 4 | | |
| PACKAGING: | BULK | PK-40873-0041 | |
| CKTS | MATERIAL NUMBER | CKTS | MATERIAL NUMBER |
| 02 | | 20 | |
| 03 | | 21 | |
| 04 | | 22 | |
| 05 | 42375-4200 | 23 | |
| 06 | | 24 | |
| 07 | | 25 | |
| 08 | | 26 | |
| 09 | | 27 | |
| 10 | | 28 | |
| 11 | | 29 | |
| 12 | | 30 | |
| 13 | | 31 | |
| 14 | | 32 | |
| 15 | | 33 | |
| 16 | | 34 | |
| 17 | | 35 | |
| 18 | | 36 | |
| 19 | | | |

| REV: | ECR/ECN INFORMATION: | TITLE: | SHEET No. |
|---|---|---|---|
| U | EC No.: UCP2017-2793<br>DATE: 12/20/2021 | KK 100 HEADER ASSY<br>FLAT VERTICAL<br>BREAKAWAY | - 33 - |

| DOCUMENT NUMBER: | CREATED / REVISED BY: | CHECKED BY: | APPROVED BY: |
|---|---|---|---|
| SD- 42375-001 | SS06 | ISHWARG | ISHWARG |

| ENG. NO: 42375-4236 | |
|---|---|
| HEADER NUMBER: | 42312-0036 |
| PIN NUMBER: | 42663-CCA118 |
| PIN LENGTH: L | .670 / 17.02 |
| MATING LENGTH: M | .440 / 11.18 |
| GOLD POINT: G | NA |
| PC TAIL LENGTH: P | .140 / 3.56 |
| TIN: T | OVERALL |
| CKTS: | 2-36 |
| KINKS: | SMES-42003 |
| VOIDED CKTS: | NONE |
| PACKAGING: | BULK PK-40873-0041 |

| CKTS | ITEM NUMBER | CKTS | ITEM NUMBER |
|---|---|---|---|
| 02 | | 20 | |
| 03 | | 21 | |
| 04 | | 22 | |
| 05 | | 23 | |
| 06 | 42375-4236 | 24 | |
| 07 | | 25 | |
| 08 | | 26 | |
| 09 | | 27 | |
| 10 | | 28 | |
| 11 | | 29 | |
| 12 | | 30 | |
| 13 | | 31 | |
| 14 | | 32 | |
| 15 | | 33 | |
| 16 | | 34 | |
| 17 | | 35 | |
| 18 | | 36 | |
| 19 | | | |

| ENG. NO: 42375-4305 | |
|---|---|
| HEADER NUMBER: | 42312-0036 |
| PIN NUMBER: | 42663-BDA154 |
| PIN LENGTH: L | .570 / 14.48 |
| MATING LENGTH: M | .339 / 8.61 |
| GOLD POINT: G | N/A |
| PC TAIL LENGTH: P | .141 / 3.58 |
| TIN: T | OVERALL |
| CKTS: | 2-36 |
| KINKS: | NO |
| VOIDED CKTS: | NONE |
| PACKAGING: | BULK PK-40873-0041 |

| CKTS | MATERIAL NUMBER | CKTS | MATERIAL NUMBER |
|---|---|---|---|
| 02 | | 20 | |
| 03 | | 21 | |
| 04 | | 22 | |
| 05 | 42375-4305 | 23 | |
| 06 | | 24 | |
| 07 | | 25 | |
| 08 | | 26 | |
| 09 | | 27 | |
| 10 | | 28 | |
| 11 | | 29 | |
| 12 | | 30 | |
| 13 | | 31 | |
| 14 | | 32 | |
| 15 | | 33 | |
| 16 | | 34 | |
| 17 | | 35 | |
| 18 | | 36 | |
| 19 | | | |

| ENG. NO: 42375-4338/4341 | |
|---|---|
| HEADER NUMBER: | 42312-0036 |
| PIN NUMBER: | 42663-BGA154 |
| PIN LENGTH: L | .585 / 14.86 |
| MATING LENGTH: M | .398 / 10.11 |
| GOLD POINT: G | N/A |
| PC TAIL LENGTH: P | .097 / 2.46 |
| TIN: T | OVERALL |
| CKTS: | 2-36 |
| KINKS: | NO |
| VOIDED CKTS: | NONE |
| PACKAGING: | BULK PK-40873-0041 |

| CKTS | MATERIAL NUMBER | CKTS | MATERIAL NUMBER |
|---|---|---|---|
| 02 | | 20 | |
| 03 | 42375-4338 | 21 | |
| 04 | | 22 | |
| 05 | | 23 | |
| 06 | 42375-4341 | 24 | |
| 07 | | 25 | |
| 08 | | 26 | |
| 09 | | 27 | |
| 10 | | 28 | |
| 11 | | 29 | |
| 12 | | 30 | |
| 13 | | 31 | |
| 14 | | 32 | |
| 15 | | 33 | |
| 16 | | 34 | |
| 17 | | 35 | |
| 18 | | 36 | |
| 19 | | | |

| REV: | ECR/ECN INFORMATION: | TITLE: | SHEET No. |
|---|---|---|---|
| **U** | EC No.: **UCP2017-2793**<br>DATE: **12/20/2021** | **KK 100 HEADER ASSY FLAT VERTICAL BREAKAWAY** | **- 34 -** |

| DOCUMENT NUMBER: | CREATED / REVISED BY: | CHECKED BY: | APPROVED BY: |
|---|---|---|---|
| **SD- 42375-001** | **SS06** | **ISHWARG** | **ISHWARG** |

| ENG. NO: 42375-4413 | |
|---|---|
| HEADER NUMBER: | 42312-0036 |
| PIN NUMBER: | 42663-ABB208 |
| PIN LENGTH: L | .455 / 11.56 |
| MATING LENGTH: M | .240 / 6.09 |
| GOLD POINT: G | .100 / 2.54 |
| PC TAIL LENGTH: P | .125 / 3.18 |
| TIN: T | .100 / 2.54 |
| CKTS: | 6-36 |
| KINKS: | NO |
| VOIDED CKTS: | 2, 4, 6 |
| PACKAGING: | BULK PK-40873-0041 |

| CKTS | ITEM NUMBER | CKTS | ITEM NUMBER |
|---|---|---|---|
| 02 | | 20 | |
| 03 | | 21 | |
| 04 | | 22 | |
| 05 | | 23 | |
| 06 | | 24 | |
| 07 | 42375-4413 | 25 | |
| 08 | | 26 | |
| 09 | | 27 | |
| 10 | | 28 | |
| 11 | | 29 | |
| 12 | | 30 | |
| 13 | | 31 | |
| 14 | | 32 | |
| 15 | | 33 | |
| 16 | | 34 | |
| 17 | | 35 | |
| 18 | | 36 | |
| 19 | | | |

| ENG. NO: 42375-4445 | |
|---|---|
| HEADER NUMBER: | 42312-0036 |
| PIN NUMBER: | 42663-0364 |
| PLATING: | 228 |
| PIN LENGTH: L | .590 / 14.99 |
| MATING LENGTH: M | .380 / 9.65 |
| GOLD POINT: G | .200 / 5.08 |
| PC TAIL LENGTH: P | .120 / 3.05 |
| TIN: T | .135 / 3.43 |
| CKTS: | 2-36 |
| KINKS: | NO |
| VOIDED CKTS: | NONE |
| PACKAGING: | BULK PK-40873-0041 |

| CKTS | MATERIAL NUMBER | CKTS | MATERIAL NUMBER |
|---|---|---|---|
| 02 | | 20 | |
| 03 | | 21 | |
| 04 | 42375-4445 | 22 | |
| 05 | | 23 | |
| 06 | | 24 | |
| 07 | | 25 | |
| 08 | | 26 | |
| 09 | | 27 | |
| 10 | | 28 | |
| 11 | | 29 | |
| 12 | | 30 | |
| 13 | | 31 | |
| 14 | | 32 | |
| 15 | | 33 | |
| 16 | | 34 | |
| 17 | | 35 | |
| 18 | | 36 | |
| 19 | | | |

| REV: | ECR/ECN INFORMATION: | TITLE: | SHEET No. |
|---|---|---|---|
| **U** | EC No.: **UCP2017-2793**<br>DATE: **12/20/2021** | **KK 100 HEADER ASSY FLAT VERTICAL BREAKAWAY** | **- 35 -** |

| DOCUMENT NUMBER: | CREATED / REVISED BY: | CHECKED BY: | APPROVED BY: |
|---|---|---|---|
| **SD- 42375-001** | **SS06** | **ISHWARG** | **ISHWARG** |

| ENG. NO: 42375-4549 | |
|---|---|
| HEADER NUMBER: | 42312-0036 |
| PIN NUMBER: | 42663-ABB208 |
| PIN LENGTH: L | .455 / 11.56 |
| MATING LENGTH: M | .240 / 6.09 |
| GOLD POINT: G | .100 / 2.54 |
| PC TAIL LENGTH: P | .125 / 3.18 |
| TIN: T | .100 / 2.54 |
| CKTS: | 2-36 |
| KINKS: | NO |
| VOIDED CKTS: | NONE |
| PACKAGING: | TAPE AND REEL 423751000-PK |

| CKTS | MATERIAL NUMBER | ENG NUMBER | CKTS | MATERIAL NUMBER | ENG NUMBER |
|---|---|---|---|---|---|
| 02 | 22-28-4029 | 42375-4549 | 20 | | |
| 03 | | | 21 | | |
| 04 | | | 22 | | |
| 05 | | | 23 | | |
| 06 | | | 24 | | |
| 07 | | | 25 | | |
| 08 | | | 26 | | |
| 09 | | | 27 | | |
| 10 | | | 28 | | |
| 11 | | | 29 | | |
| 12 | | | 30 | | |
| 13 | | | 31 | | |
| 14 | | | 32 | | |
| 15 | | | 33 | | |
| 16 | | | 34 | | |
| 17 | | | 35 | | |
| 18 | | | 36 | | |
| 19 | | | | | |

| REV: | ECR/ECN INFORMATION: | TITLE: | SHEET No. |
|---|---|---|---|
| **U** | EC No.: **UCP2017-2793**<br>DATE: **12/20/2021** | **KK 100 HEADER ASSY FLAT VERTICAL BREAKAWAY** | **- 36 -** |

| DOCUMENT NUMBER: | CREATED / REVISED BY: | CHECKED BY: | APPROVED BY: |
|---|---|---|---|
| **SD- 42375-001** | **SS06** | **ISHWARG** | **ISHWARG** |