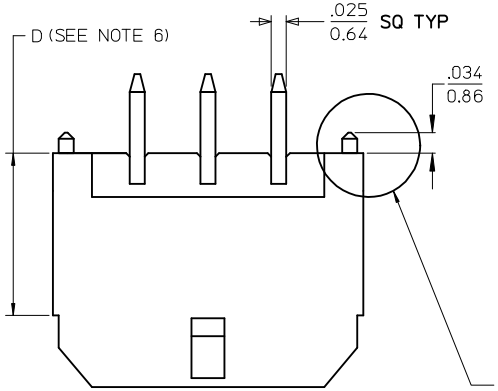

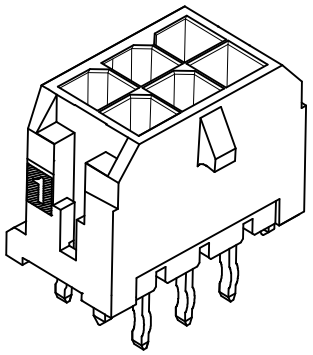

NOTE : (2) POLARIZATION PEGS ARE SHOWN. HOWEVER, ASSEMBLIES MAY BE MANUFACTURED WITH (1) PEG ONLY.

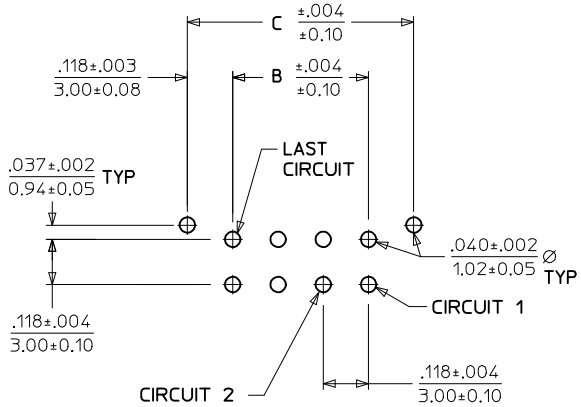

PCB LAYOUT: COMPONENT SIDE
RECOMMEND PCB THICKNESS: .062/1.57

CKTS	A	B	C
02	.262 6.65	 NA	.236 6.00
04	.380 9.65	.118 3.00	.354 9.00
06	.498 12.65	.236 6.00	.472 12.00
08	.616 15.65	.354 9.00	.591 15.00
10	.734 18.65	.472 12.00	.709 18.00
12	.852 21.65	.591 15.00	.827 21.00
14	.970 24.65	.709 18.00	.945 24.00
16	1.088 27.65	.827 21.00	1.063 27.00
18	1.206 30.65	.945 24.00	1.181 30.00
20	1.325 33.65	1.063 27.00	1.299 33.00
22	1.443 36.65	1.181 30.00	1.417 36.00
24	1.561 39.65	1.299 33.00	1.535 39.00

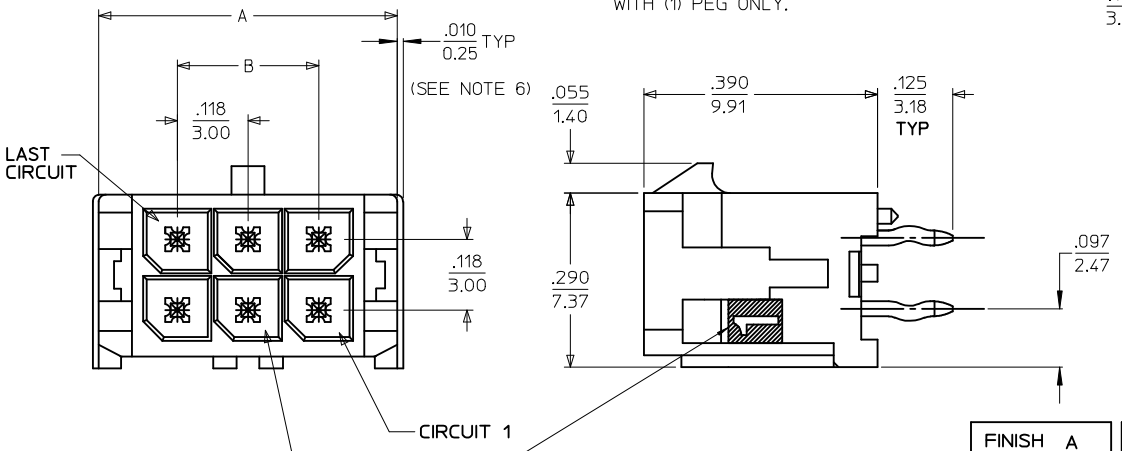

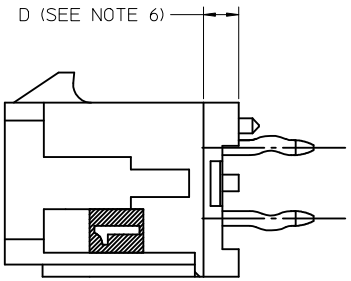

CKTS	FINISH A MATERIAL NO:	FINISH B MATERIAL NO:	FINISH C MATERIAL NO:	FINISH D MATERIAL NO:
02	43045-0212	43045-0213	43045-0214	43045-0311
04	43045-0412	43045-0413	43045-0414	43045-0511
06	43045-0612	43045-0613	43045-0614	43045-0711
08	43045-0812	43045-0813	43045-0814	43045-0911
10	43045-1012	43045-1013	43045-1014	43045-1111
12	43045-1212	43045-1213	43045-1214	43045-1311
14	43045-1412	43045-1413	43045-1414	43045-1511
16	43045-1612	43045-1613	43045-1614	43045-1711
18	43045-1812	43045-1813	43045-1814	43045-1911
20	43045-2012	43045-2013	43045-2014	43045-2111
22	43045-2212	43045-2213	43045-2214	43045-2311
24	43045-2412	43045-2413	43045-2414	43045-2511

NOTES:

1. HOUSING MATERIAL: GLASS FILLED LIQUID CRYSTAL POLYMER, UL94V-0, COLOR: BLACK
   TERMINAL MATERIAL: BRASS ALLOY
2. FINISH: A = .000060/(0.00152) MIN. REFLOWED MATTE TIN OVER .000050/(0.00127) MIN. NICKEL PLATE. (FINISH IS BRIGHT IN APPEARANCE. THICKNESS AS APPLIED PRIOR TO REFLOW)
   B = .000015/(0.00038) MIN. SELECT GOLD IN CONTACT AREA; .000100/(0.00254) MIN. SELECT MATTE TIN ON SOLDER TAILS; BOTH OVER .000050/(0.00127) MIN. NICKEL PLATE.
   C = .000030/(0.00076) MIN. SELECT GOLD IN CONTACT AREA; .000100/(0.00254) MIN. SELECT MATTE TIN ON SOLDER TAILS; BOTH OVER .000050/(0.00127) MIN. NICKEL PLATE.
   D = .000100/(0.00254) MIN. MATTE TIN OVER .000050/(0.00127) MIN. NICKEL PLATE.
3. PRODUCT SPECIFICATION: PS-43045
4. TRAY PACKAGED: SEE MOLEX DRAWING PK-70873-0314
5. MATES WITH MICRO FIT (3.0) RECEPTACLE SERIES 43025
6. CIRCUIT SIZES 2-6: "D" IS 0.265/6.74 FOR .010/0.25 STEP.
   CIRCUIT SIZES 8-24: "D" IS 0.063/1.60 FOR .010/0.25 STEP.
7. THIS PART CONFORMS TO CLASS B REQUIREMENTS OF COSMETIC SPECIFICATION PS-45499-002.

FINISH A & D
EC NO: UCP2016-4586 2015/12/10
DRWN: JDFOX 2015/12/10
CHKD: SSOUSEK 2016/08/23
APPR: FSMITH
DESCRIPTION
REV
G1

QUALITY SYMBOLS
E =0
E =0
E =0

GENERAL TOLERANCES (UNLESS SPECIFIED)

	mm	INCH
4 PLACES	± ---	± ---
3 PLACES	± ---	± .010
2 PLACES	± 0.25	± .014
1 PLACE	± 0.36	± ---
0 PLACE	± ---	± ---

ANGULAR ±1/2°
DRAFT WHERE APPLICABLE MUST REMAIN WITHIN DIMENSIONS

DIMENSION STYLE: IN/MM
SCALE: ---
DESIGN UNITS: METRIC
THIRD ANGLE PROJECTION

DRAWN BY: SAMIEC DATE: 2000/03/15
CHECKED BY: SSOUSEK DATE: 2016/06/01
APPROVED BY: FSMITH DATE: 2016/08/23
MATERIAL NO.: SEE CHART

TITLE: MICRO FIT (3,0) DUAL ROW VERTICAL THRU HOLE HEADER ASS'Y

molex

DOCUMENT NO.: SD-43045-005
SHEET NO.: 1 OF 1
SIZE: C

THIS DRAWING CONTAINS INFORMATION THAT IS PROPRIETARY TO MOLEX INCORPORATED AND SHOULD NOT BE USED WITHOUT WRITTEN PERMISSION

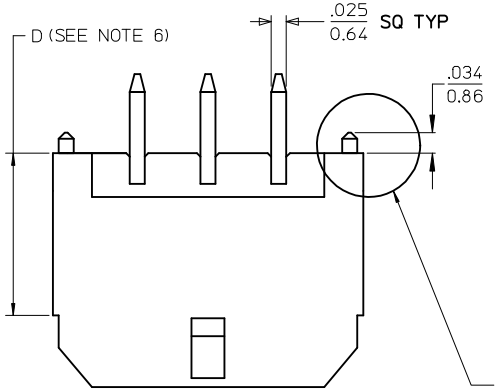

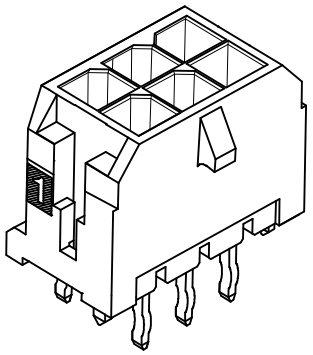

NOTE : (2) POLARIZATION PEGS ARE SHOWN. HOWEVER, ASSEMBLIES MAY BE MANUFACTURED WITH (1) PEG ONLY.

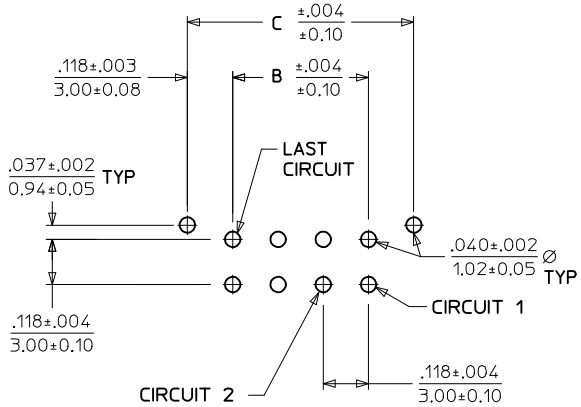

PCB LAYOUT: COMPONENT SIDE
RECOMMEND PCB THICKNESS: .062/1.57

CKTS	A	B	C
02	.262 6.65	 NA	.236 6.00
04	.380 9.65	.118 3.00	.354 9.00
06	.498 12.65	.236 6.00	.472 12.00
08	.616 15.65	.354 9.00	.591 15.00
10	.734 18.65	.472 12.00	.709 18.00
12	.852 21.65	.591 15.00	.827 21.00
14	.970 24.65	.709 18.00	.945 24.00
16	1.088 27.65	.827 21.00	1.063 27.00
18	1.206 30.65	.945 24.00	1.181 30.00
20	1.325 33.65	1.063 27.00	1.299 33.00
22	1.443 36.65	1.181 30.00	1.417 36.00
24	1.561 39.65	1.299 33.00	1.535 39.00

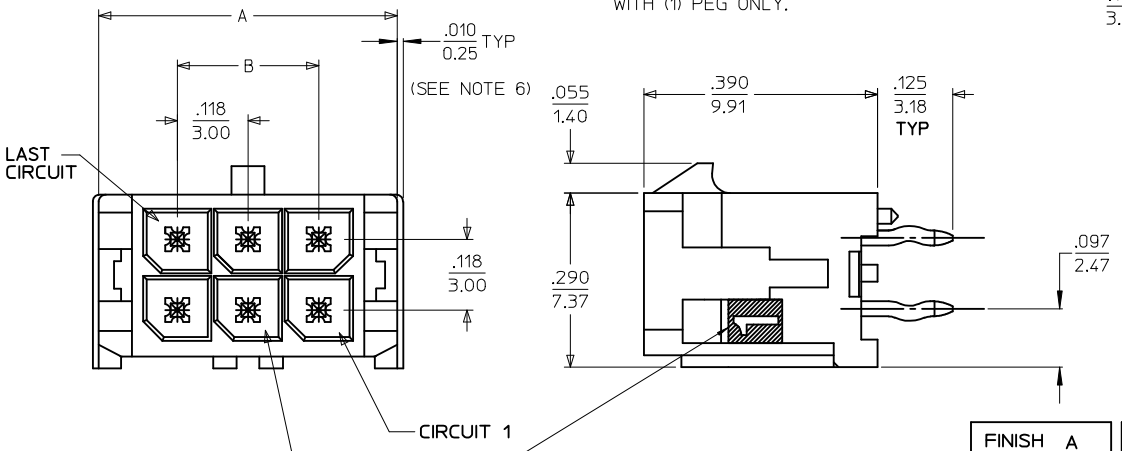

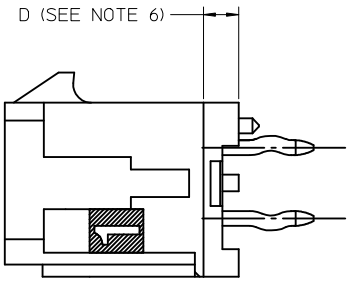

CKTS	FINISH A MATERIAL NO:	FINISH B MATERIAL NO:	FINISH C MATERIAL NO:	FINISH D MATERIAL NO:
02	43045-0212	43045-0213	43045-0214	43045-0311
04	43045-0412	43045-0413	43045-0414	43045-0511
06	43045-0612	43045-0613	43045-0614	43045-0711
08	43045-0812	43045-0813	43045-0814	43045-0911
10	43045-1012	43045-1013	43045-1014	43045-1111
12	43045-1212	43045-1213	43045-1214	43045-1311
14	43045-1412	43045-1413	43045-1414	43045-1511
16	43045-1612	43045-1613	43045-1614	43045-1711
18	43045-1812	43045-1813	43045-1814	43045-1911
20	43045-2012	43045-2013	43045-2014	43045-2111
22	43045-2212	43045-2213	43045-2214	43045-2311
24	43045-2412	43045-2413	43045-2414	43045-2511

NOTES:

1. HOUSING MATERIAL: GLASS FILLED LIQUID CRYSTAL POLYMER, UL94V-0, COLOR: BLACK
   TERMINAL MATERIAL: BRASS ALLOY
2. FINISH: A = .000060/(0.00152) MIN. REFLOWED MATTE TIN OVER .000050/(0.00127) MIN. NICKEL PLATE. (FINISH IS BRIGHT IN APPEARANCE. THICKNESS AS APPLIED PRIOR TO REFLOW)
   B = .000015/(0.00038) MIN. SELECT GOLD IN CONTACT AREA; .000100/(0.00254) MIN. SELECT MATTE TIN ON SOLDER TAILS; BOTH OVER .000050/(0.00127) MIN. NICKEL PLATE.
   C = .000030/(0.00076) MIN. SELECT GOLD IN CONTACT AREA; .000100/(0.00254) MIN. SELECT MATTE TIN ON SOLDER TAILS; BOTH OVER .000050/(0.00127) MIN. NICKEL PLATE.
   D = .000100/(0.00254) MIN. MATTE TIN OVER .000050/(0.00127) MIN. NICKEL PLATE.
3. PRODUCT SPECIFICATION: PS-43045
4. TRAY PACKAGED: SEE MOLEX DRAWING PK-70873-0314
5. MATES WITH MICRO FIT (3.0) RECEPTACLE SERIES 43025
6. CIRCUIT SIZES 2-6: "D" IS 0.265/6.74 FOR .010/0.25 STEP.
   CIRCUIT SIZES 8-24: "D" IS 0.063/1.60 FOR .010/0.25 STEP.
7. THIS PART CONFORMS TO CLASS B REQUIREMENTS OF COSMETIC SPECIFICATION PS-45499-002.

FINISH A & D
EC NO: UCP2016-4586 2015/12/10
DRWN: JDFOX 2015/12/10
CHKD: SSOUSEK 2016/08/23
APPR: FSMITH
DESCRIPTION
REV
G1

QUALITY SYMBOLS
E =0
E =0
E =0

GENERAL TOLERANCES (UNLESS SPECIFIED)

	mm	INCH
4 PLACES	± ---	± ---
3 PLACES	± ---	± .010
2 PLACES	± 0.25	± .014
1 PLACE	± 0.36	± ---
0 PLACE	± ---	± ---

ANGULAR ±1/2°
DRAFT WHERE APPLICABLE MUST REMAIN WITHIN DIMENSIONS

DIMENSION STYLE: IN/MM
SCALE: ---
DESIGN UNITS: METRIC
THIRD ANGLE PROJECTION

DRAWN BY: SAMIEC DATE: 2000/03/15
CHECKED BY: SSOUSEK DATE: 2016/06/01
APPROVED BY: FSMITH DATE: 2016/08/23
MATERIAL NO.: SEE CHART

TITLE: MICRO FIT (3,0) DUAL ROW VERTICAL THRU HOLE HEADER ASS'Y

molex

DOCUMENT NO.: SD-43045-005
SHEET NO.: 1 OF 1
SIZE: C

THIS DRAWING CONTAINS INFORMATION THAT IS PROPRIETARY TO MOLEX INCORPORATED AND SHOULD NOT BE USED WITHOUT WRITTEN PERMISSION