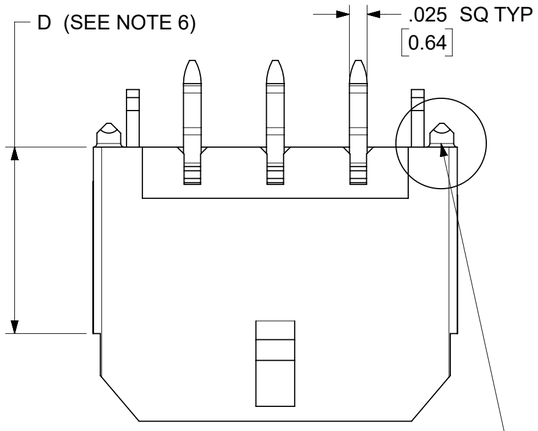

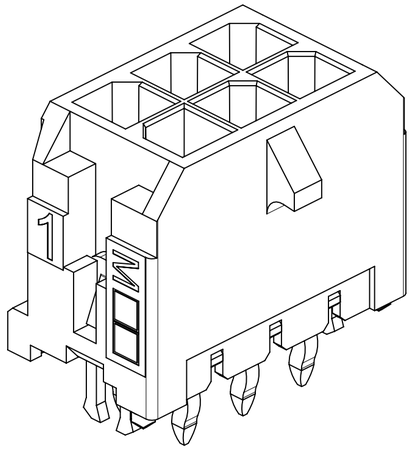

NOTE: (2) POLARIZATION PEGS ARE SHOWN.
HOWEVER, ASSEMBLIES MAY BE MANUFACTURED
WITH (1) PEG ONLY.

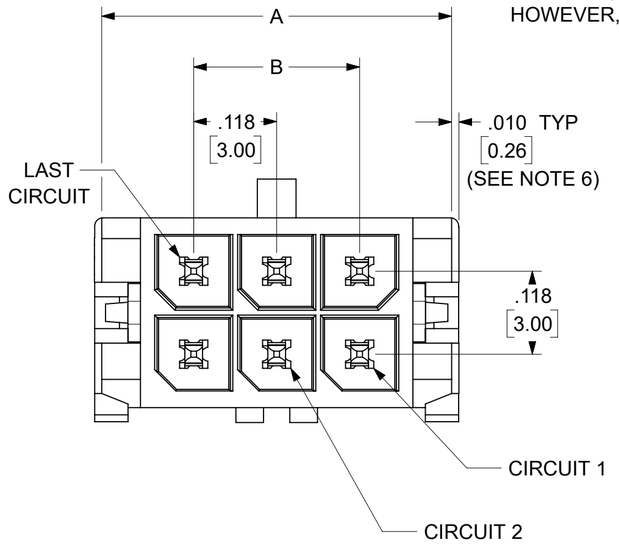

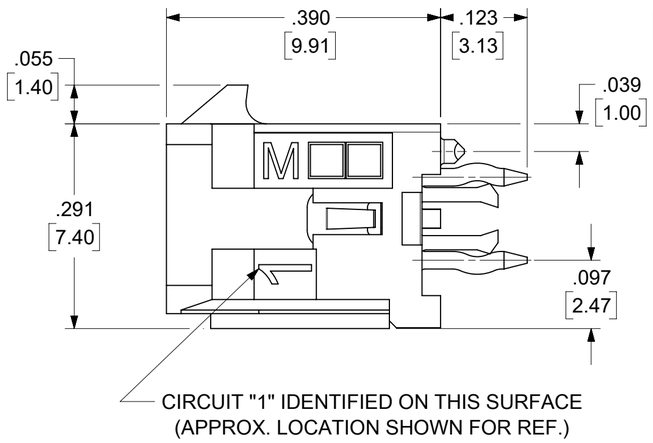

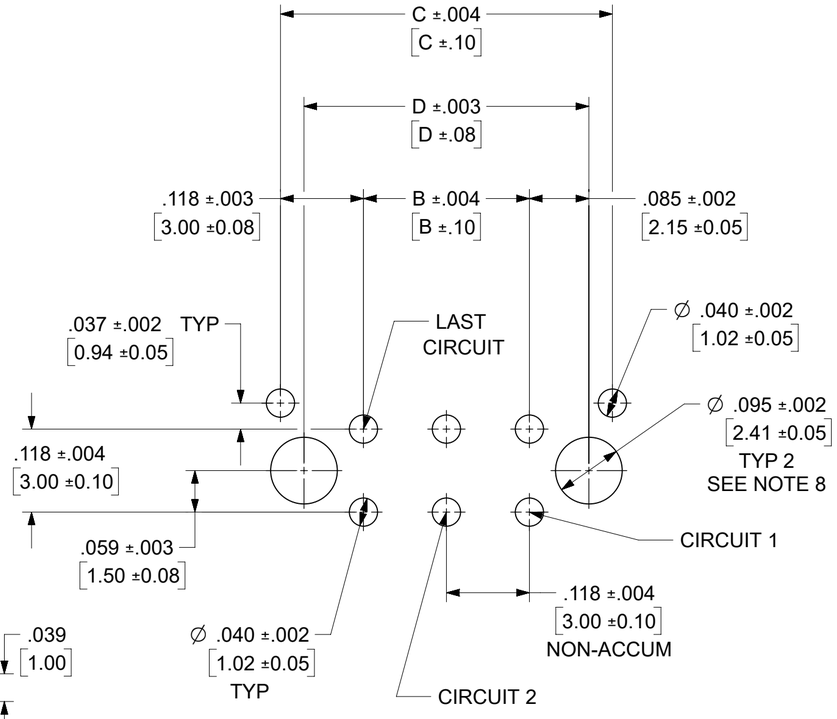

PCB LAYOUT: COMPONENT SIDE
RECOMMEND PCB THICKNESS .062/1.57

CKTS	A	B	C	D
02	.262 6.65	 NA	.236 6.00	.169 4.30
04	.380 9.65	.118 3.00	.354 9.00	.287 7.30
06	.498 12.65	.236 6.00	.472 12.00	.405 10.30
08	.616 15.65	.354 9.00	.591 15.00	.524 13.30
10	.734 18.65	.472 12.00	.709 18.00	.642 16.30
12	.852 21.65	.591 15.00	.827 21.00	.760 19.30
14	.970 24.65	.709 18.00	.945 24.00	.878 22.30
16	1.088 27.65	.827 21.00	1.063 27.00	.996 25.30
18	1.206 30.65	.945 24.00	1.181 30.00	1.114 28.30
20	1.325 33.65	1.063 27.00	1.299 33.00	1.232 31.30
22	1.443 36.65	1.181 30.00	1.417 36.00	1.350 34.30
24	1.561 39.65	1.299 33.00	1.535 39.00	1.469 37.30

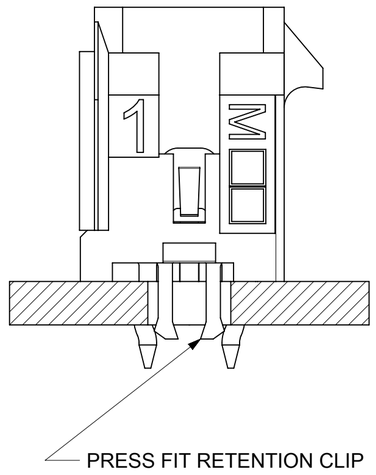

NOTES:

1. HOUSING MATERIAL: GLASS FILLED LIQUID CRYSTAL POLYMER, UL94V-0, COLOR: BLACK
   TERMINAL MATERIAL: BRASS ALLOY
2. FINISH:
   A = .000060/(0.00152) MIN. REFLOWED MATTE TIN OVER .000050/(0.00127) MIN. NICKEL PLATE. (FINISH IS BRIGHT IN APPEARANCE, THICKNESS AS APPLIED PRIOR TO REFLOW)
   B = .000015/(0.00038) MIN. SELECT GOLD IN CONTACT AREA; .000100/(0.00254) MIN. SELECT MATTE TIN ON SOLDER TAILS; BOTH OVER .000050/(0.00127) MIN. NICKEL PLATE.
   C = .000030/(0.00076) MIN. SELECT GOLD IN CONTACT AREA; .000100/(0.00254) MIN. SELECT MATTE TIN ON SOLDER TAILS; BOTH OVER .000050/(0.00127) MIN. NICKEL PLATE.
   D = .000100/(0.00254) MIN. MATTE TIN OVER .000050/(0.00127) MIN. NICKEL PLATE.
3. PRODUCT SPECIFICATION: PS-43045
4. TRAY PACKAGED: SEE MOLEX DRAWING PK-70873-0314
5. MATES WITH MICRO FIT (3.0) RECEPTACLE SERIES 43025
6. CIRCUIT SIZES 2-6: "D" IS .265/6.74 FOR .010/0.25 STEP
   CIRCUIT SIZES 8-24: "D" IS .063/1.60 FOR .010/0.25 STEP.
7. THIS PART CONFORMS TO CLASS B REQUIREMENTS OF COSMETIC SPECIFICATION PS-45499-002.
8. FOR BEST RETENTION TO PCB, HOLES FOR CLIPS SHOULD BE PTH AND CLIPS SHOULD BE SOLDERED
9. TEXT ON PART IS FOR REFERENCE ONLY. TEXT AND TEXT LOCATION MAY VARY DEPENDING ON PART NUMBER AND/OR TOOL

CKTS	FINISH A MATERIAL NO:	FINISH B MATERIAL NO:	FINISH C MATERIAL NO:	FINISH D MATERIAL NO:
02	43045-0224	43045-0225	43045-0226	43045-0304
04	43045-0424	43045-0425	43045-0426	43045-0504
06	43045-0624	43045-0625	43045-0626	43045-0704
08	43045-0824	43045-0825	43045-0826	43045-0904
10	43045-1024	43045-1025	43045-1026	43045-1104
12	43045-1224	43045-1225	43045-1226	43045-1304
14	43045-1424	43045-1425	43045-1426	43045-1504
16	43045-1624	43045-1625	43045-1626	43045-1704
18	43045-1824	43045-1825	43045-1826	43045-1904
20	43045-2024	43045-2025	43045-2026	43045-2104
22	43045-2224	43045-2225	43045-2226	43045-2304
24	43045-2424	43045-2425	43045-2426	43045-2504

DOCUMENT STATUS	P1	RELEASE DATE	2023/01/26 18:55:53

FUNCTIONAL SYMBOLS
FA = 0
FC = 0
FD = 0
DIVISIONAL SYMBOLS

THIS DRAWING CONTAINS INFORMATION THAT IS PROPRIETARY TO MOLEX ELECTRONIC TECHNOLOGIES, LLC AND SHOULD NOT BE USED WITHOUT WRITTEN PERMISSION

DIMENSION UNITS: INCH/MM
SCALE: NTS

GENERAL TOLERANCES (UNLESS SPECIFIED)

	MM	INCH
4 PLACES	±	±
3 PLACES	±	± 0.01
2 PLACES	± 0.25	± 0.014
1 PLACE	± 0.36	±
0 PLACES	±	±
ANGULAR TOL	± 0.5 °	

DRAFT WHERE APPLICABLE MUST REMAIN WITHIN DIMENSIONS

CURRENT REV DESC: REDRAWN, ADD NOTES 8 AND 9

EC NO: 736143
DRWN: SETHH6 2022/12/16
CHK'D: MKIPPER 2023/01/24
APPR: FSMITH 2023/01/26

INITIAL REVISION:
DRWN: KSAMIEC 2000/04/06
APPR: REDGLEY 2000/12/07

molex

MICRO-FIT (3.0)
DUAL ROW VERTICAL THRU HOLE HEADER W/CLIPS

PRODUCT CUSTOMER DRAWING

DOCUMENT NUMBER	DOC TYPE	DOC PART	REVISION
SD-43045-009	PSD	001	H5

THIRD ANGLE PROJECTION | DRAWING: C-SIZE | SERIES: 43045 | MATERIAL NUMBER: SEE CHART | CUSTOMER: GENERAL MARKET | SHEET NUMBER: 1 OF 1

FORMAT: Eng-lega-master-tb-prod-C
REVISION: E1
DATE: 2021/05/01