PART NUMBER	PLATING	RECOMMENDED WIRE SIZE	DIM "A" BLADE LENGTH	DIM "B" WIDTH	DIM "C" HEIGHT	RECOMMENDED CRIMP APPLICATOR	PRODUCT STATUS
44262-6520	30μ INCHES SELECT GOLD STRIPE OVER 50μ INCHES NICKEL OVERALL WITH 80-160μ INCHES SELECT TIN	8 AWG	10.03/.395	N/A	N/A	63832-6300	NOT TOOLED
44262-6521		(2) 12 AWG	11.56/.455				
44262-6522			13.08/.515				
44262-6310	80-160μ INCHES TIN OVERALL OVER 50μ INCHES NICKEL OVERALL	10-12 AWG (2) 14 AWG	10.03/.395	5.33+-0.25 .210+-.010	5.97+-0.50 .235+-.020	63832-6000	TOOLED
44262-6311			11.56/.455				
44262-6312			13.08/.515				
44262-6320	30μ INCHES SELECT GOLD STRIPE OVER 50μ INCHES NICKEL OVERALL WITH 80-160μ INCHES SELECT TIN		10.03/.395				
44262-6321			11.56/.455				
44262-6322			13.08/.515				
44262-6420	30μ INCHES SELECT GOLD STRIPE OVER 50μ INCHES NICKEL OVERALL WITH 80-160μ INCHES SELECT TIN	14-16 AWG (2) 16 AWG (2) 18 AWG	10.03/.395		5.21+-0.50 .205+-.020	63832-6100	
44262-6421			11.56/.455				
44262-6422			13.08/.515				

NOTES:

1. MATERIAL: COPPER ALLOY .032 IN THICK
2. FINISH: PER MOLEX PLATING SPECIFICATION ES-88 - SEE CHART
3. SEE CHART FOR CRIMP APPLICATOR NUMBER
4. FOR CRIMP TOOLING CONTACT MOLEX OR VISIT THE MOLEX WEBSITE AT WWW.MOLEX.COM
5. STD PACKAGE SIZE: 2,500 PARTS/REEL
6. SEE PRODUCT SPECIFICATION: PS-44262-001 FOR MORE INFORMATION.
7. PARTS ARE RoHS COMPLIANT
8. THIS PART MATES WITH RECEPTACLE (FEMALE) POWER CONTACT 44262-43** (SEE SD-44262-100)
9. FOR CRIMP SET UP INFORMATION SEE MOLEX APPLICATION DOCUMENT:
   8 AWG - ATS-638326300
   10/12 AWG - ATS-638326000
   14/16 AWG - ATS-638326100

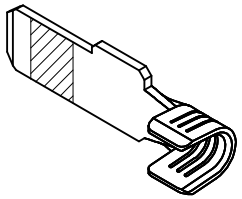

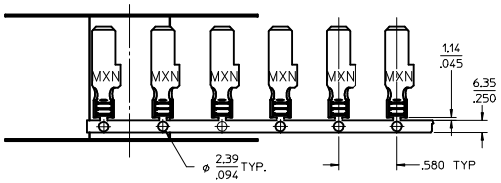

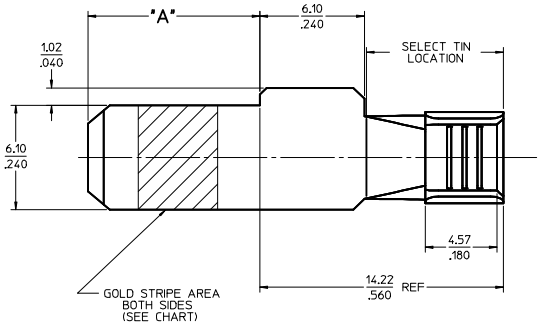

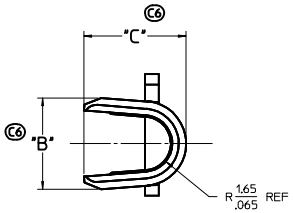

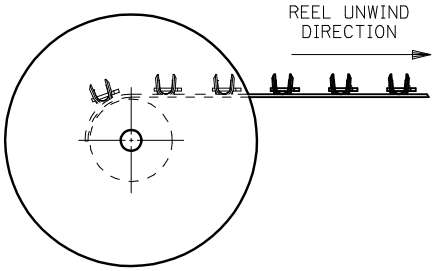

ADD 3 TIN P/N'S	EC NO:	DRWN: JSCHAFER	2015/12/29
		CHKD:	
		APPR:	
C8			

DESCRIPTION

REV

QUALITY SYMBOLS: F=0; F=0; F=0

GENERAL TOLERANCES (UNLESS SPECIFIED)

	mm	INCH
4 PLACES	± ---	± ---
3 PLACES	± ---	± .010
2 PLACES	± 0.25	± .010
1 PLACE	± 0.25	± ---
ANGULAR ±1/2°		

DRAFT WHERE APPLICABLE MUST REMAIN WITHIN DIMENSIONS

DIMENSION STYLE: MM/IN

SCALE: 5:1

DESIGN UNITS: INCH

THIRD ANGLE PROJECTION

DRAWN BY	BKOSTIC	DATE 2006/11/14
CHECKED BY	BKOSTIC	DATE 2006/11/14
APPROVED BY	APATEL	DATE 2006/11/14

TITLE: TERMINAL - BLADE POWER TERMINAL

MOLEX INCORPORATED

MATERIAL NO.: SEE CHART

DOCUMENT NO.: SD-44262-026

SHEET NO.: 1 OF 1

SIZE: D

THIS DRAWING CONTAINS INFORMATION THAT IS PROPRIETARY TO MOLEX INCORPORATED AND SHOULD NOT BE USED WITHOUT WRITTEN PERMISSION

PART NUMBER	PLATING	RECOMMENDED WIRE SIZE	DIM "A" BLADE LENGTH	DIM "B" WIDTH	DIM "C" HEIGHT	RECOMMENDED CRIMP APPLICATOR	PRODUCT STATUS
44262-6520	30μ INCHES SELECT GOLD STRIPE OVER 50μ INCHES NICKEL OVERALL WITH 80-160μ INCHES SELECT TIN	8 AWG	10.03/.395	N/A	N/A	63832-6300	NOT TOOLED
44262-6521		(2) 12 AWG	11.56/.455				
44262-6522			13.08/.515				
44262-6310	80-160μ INCHES TIN OVERALL OVER 50μ INCHES NICKEL OVERALL	10-12 AWG (2) 14 AWG	10.03/.395	5.33+-0.25 .210+-.010	5.97+-0.50 .235+-.020	63832-6000	TOOLED
44262-6311			11.56/.455				
44262-6312			13.08/.515				
44262-6320	30μ INCHES SELECT GOLD STRIPE OVER 50μ INCHES NICKEL OVERALL WITH 80-160μ INCHES SELECT TIN		10.03/.395				
44262-6321			11.56/.455				
44262-6322			13.08/.515				
44262-6420	30μ INCHES SELECT GOLD STRIPE OVER 50μ INCHES NICKEL OVERALL WITH 80-160μ INCHES SELECT TIN	14-16 AWG (2) 16 AWG (2) 18 AWG	10.03/.395		5.21+-0.50 .205+-.020	63832-6100	
44262-6421			11.56/.455				
44262-6422			13.08/.515				

NOTES:

1. MATERIAL: COPPER ALLOY .032 IN THICK
2. FINISH: PER MOLEX PLATING SPECIFICATION ES-88 - SEE CHART
3. SEE CHART FOR CRIMP APPLICATOR NUMBER
4. FOR CRIMP TOOLING CONTACT MOLEX OR VISIT THE MOLEX WEBSITE AT WWW.MOLEX.COM
5. STD PACKAGE SIZE: 2,500 PARTS/REEL
6. SEE PRODUCT SPECIFICATION: PS-44262-001 FOR MORE INFORMATION.
7. PARTS ARE RoHS COMPLIANT
8. THIS PART MATES WITH RECEPTACLE (FEMALE) POWER CONTACT 44262-43** (SEE SD-44262-100)
9. FOR CRIMP SET UP INFORMATION SEE MOLEX APPLICATION DOCUMENT:
   8 AWG - ATS-638326300
   10/12 AWG - ATS-638326000
   14/16 AWG - ATS-638326100

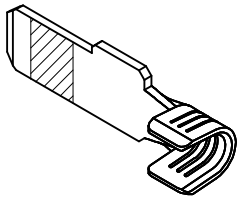

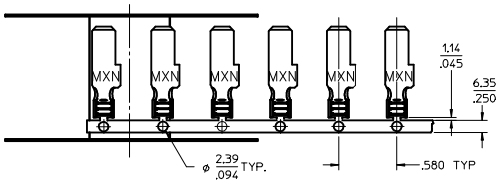

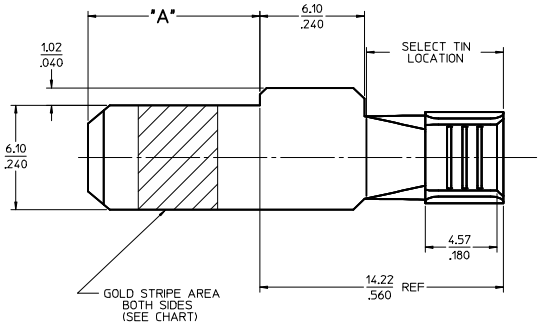

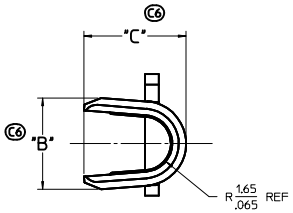

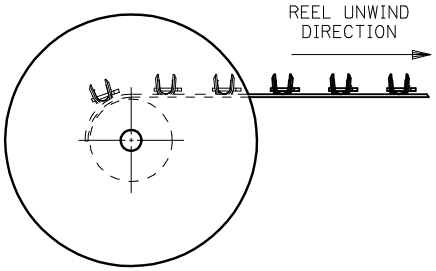

ADD 3 TIN P/N'S	EC NO:	DRWN: JSCHAFER	2015/12/29
		CHKD:	
		APPR:	
C8			

DESCRIPTION

REV

QUALITY SYMBOLS: F=0; F=0; F=0

GENERAL TOLERANCES (UNLESS SPECIFIED)

	mm	INCH
4 PLACES	± ---	± ---
3 PLACES	± ---	± .010
2 PLACES	± 0.25	± .010
1 PLACE	± 0.25	± ---
ANGULAR ±1/2°		

DRAFT WHERE APPLICABLE MUST REMAIN WITHIN DIMENSIONS

DIMENSION STYLE: MM/IN

SCALE: 5:1

DESIGN UNITS: INCH

THIRD ANGLE PROJECTION

DRAWN BY	BKOSTIC	DATE 2006/11/14
CHECKED BY	BKOSTIC	DATE 2006/11/14
APPROVED BY	APATEL	DATE 2006/11/14

TITLE: TERMINAL - BLADE POWER TERMINAL

MOLEX INCORPORATED

MATERIAL NO.: SEE CHART

DOCUMENT NO.: SD-44262-026

SHEET NO.: 1 OF 1

SIZE: D

THIS DRAWING CONTAINS INFORMATION THAT IS PROPRIETARY TO MOLEX INCORPORATED AND SHOULD NOT BE USED WITHOUT WRITTEN PERMISSION