Part Number : 5010170508
Product Description : SlimStack Board-to-Board Plug, 0.40mm Pitch, Surface Mount, Dual Row, Vertical, 4.00mm Stacking Height, 50 Circuits
Series Number : 501017
Status : Active
Product Category : Board-to-Board Connectors

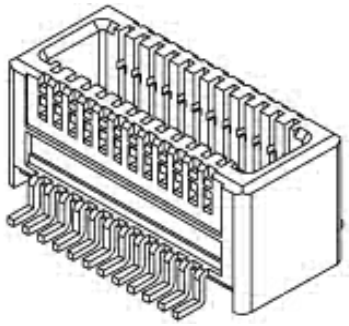

Documents and Resources

Drawings

5010170508_sd.pdf

3D Models and Design Files

STEP AP242

SOLIDWORKS

Creo

Symbol and Footprint (Multi-Format)

Specifications

SPK-501017-001-001.pdf

PS-54684-008-001.pdf

Product Environment Compliance

Compliance

GADSL/IMDS	Not Relevant
China RoHS	per SJ/T 11365-2006
EU ELV	Not Relevant
Low-Halogen Status	Low-Halogen per IEC 61249-2-21
REACH SVHC	Not Contained per D(2025)7771-DC (04 Feb 2026)
EU RoHS	Compliant per EU 2015/863

Compliance Statements

- EU RoHS

- REACH SVHC
- Low-Halogen

Industry Documents
- IPC 1752A Class C
- IPC 1752A Class D
- Molex Product Compliance Declaration
- IEC-62474
- chemSHERPA (xml)

Substances of Interest
- PFAS

EU RoHS Certificate of Compliance

Additional Product Compliance Information

Part Details

General

Status	Active
Category	Board-to-Board Connectors
Series	0.4, BB H4
Description	SlimStack Board-to-Board Plug, 0.40mm Pitch, Surface Mount, Dual Row, Vertical, 4.00mm Stacking Height, 50 Circuits
Application	Board-to-Board, Signal
Component Type	Plug
Product Name	SlimStack
UPC	822350842037

Electrical

Current - Maximum per Contact	0.3A
Voltage - Maximum	30V AC (RMS)/DC

Physical

Breakaway	No
Circuits (Loaded)	50
Circuits (maximum)	50
Color - Resin	Brown
Durability (mating cycles max)	30

Glow-Wire Capable	No
Lock to Mating Part	No
Mated Height	4.00mm
Mated Width	5.10mm
Material - Metal	Phosphor Bronze
Material - Plating Mating	Gold
Material - Plating Termination	Gold
Net Weight	148.000/mg
Number of Rows	2
Orientation	Vertical
Packaging Type	Embossed Tape on Reel
PCB Locator	No
PCB Retention	No
Pitch - Mating Interface	0.40mm
Pitch - Termination Interface	0.40mm
Polarized to Mating Part	No
Polarized to PCB	No
Temperature Range - Operating	-25° to +105°C
Termination Interface Style	Surface Mount

Mates With / Use With

Mates with Part(s)

Description	Part Number
0.40mm Pitch Vertical SlimStack Receptacles	54684