

NOTES.

1. 適合ターミナル：501193−****
APPLICABLE TERMINAL : 501193-****
2. 嵌合相手： 501190-**1*
MATE WITH : 501190-**1*
3. 極数／2＝偶数に適用。
APPLY FOR CIRCUIT SIZE/2=EVEN

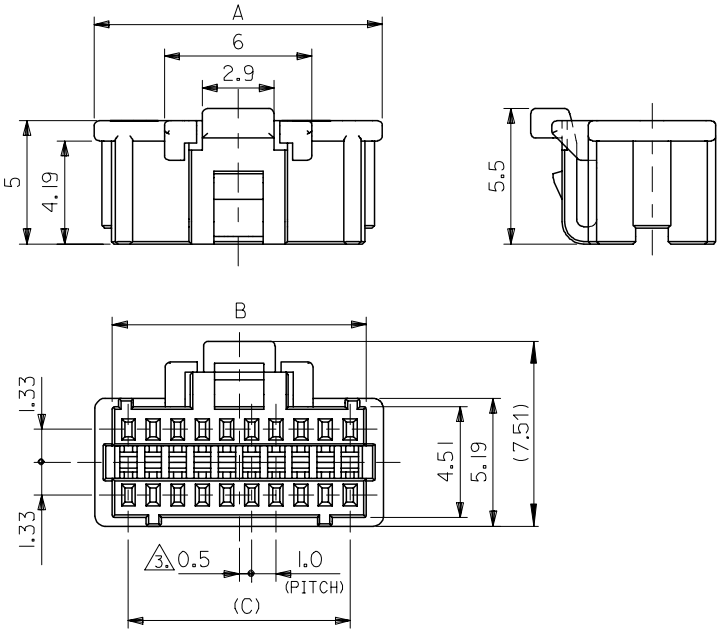

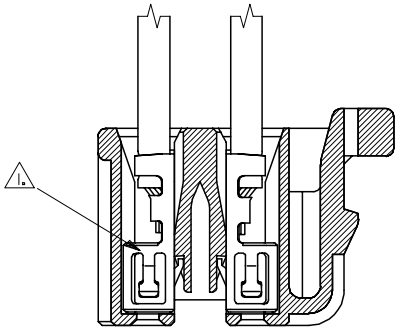

ターミナル装着図
TERMINAL ASSEMBLY DRAWING

24	25.3	26.7	501189-5030	50
19	20.3	21.7	501189-4030	40
14	15.3	16.7	501189-3030	30
9	10.3	11.7	501189-2030	20
C	B	A	MATERIAL NO.	CKT.

501189-**30 | MODEL NO.

MATERIAL

66NYLON UL94V-0
COLOR:WHITE
GLASS FILLED:0%

RELEASED
EC NO: J2007-3038
DRWN:MNABEI 2007/05/08
CHKD:KTOYODA 2007/05/08
APPR:NUKITA 2007/05/08
DESCRIPTION
REV 0

GENERAL TOLERANCES (UNLESS SPECIFIED)

10 UNDER	±0.2
10 OVER 30 UNDER	±0.25
30 OVER	±0.3
ANGULAR ±3 °	

DRAFT WHERE APPLICABLE MUST REMAIN WITHIN DIMENSIONS

DIMENSION STYLE: MM ONLY
SCALE: 5:1
DESIGN UNITS: METRIC
THIRD ANGLE PROJECTION

DRAWN BY: M.NABEI DATE: '07/05/07
CHECKED BY: K.TOYODA DATE: '07/05/07
APPROVED BY: N.UKITA DATE: '07/05/07

TITLE: 1.0 WIRE TO BOARD CONN. 2-ROW RECEPTACLE HOUSING

MOLEX INCORPORATED

MATERIAL NO.: SEE TABLE
DOCUMENT NO.: SD-501189-005
SHEET NO.: 1 OF 1

SIZE A3

THIS DRAWING CONTAINS INFORMATION THAT IS PROPRIETARY TO MOLEX INCORPORATED AND SHOULD NOT BE USED WITHOUT WRITTEN PERMISSION