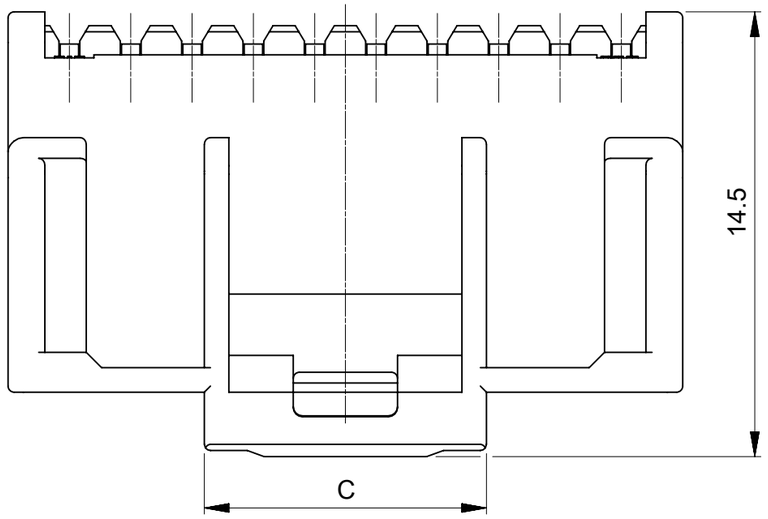

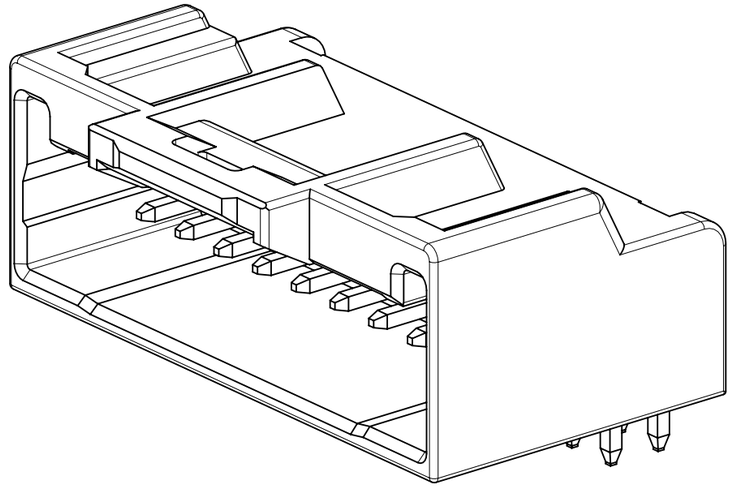

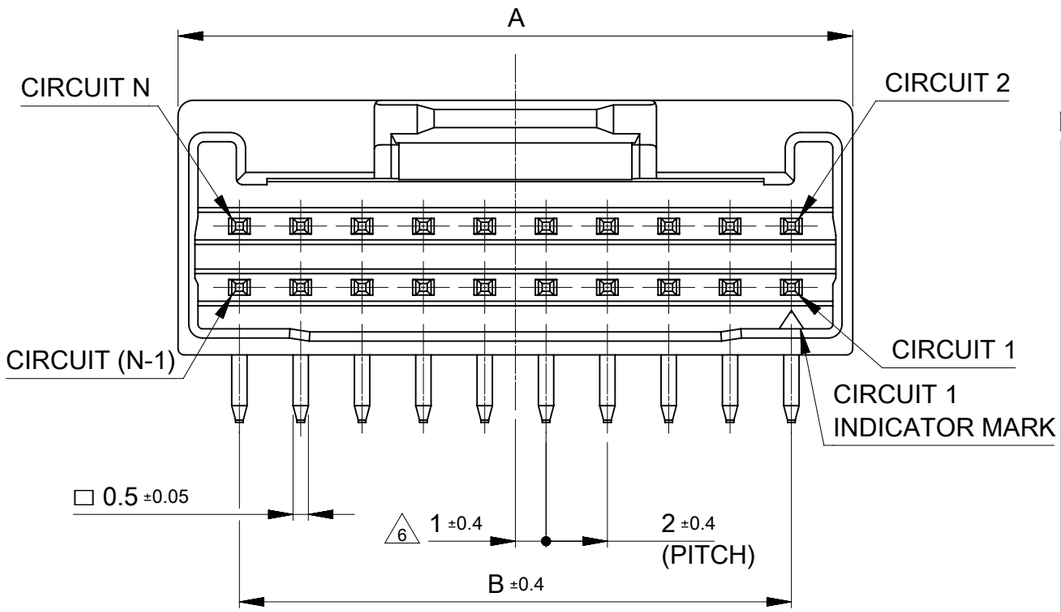

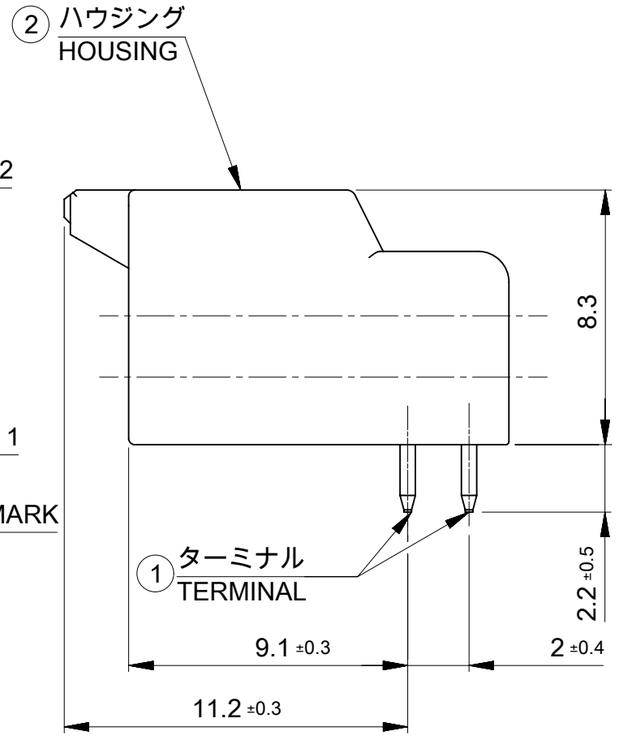

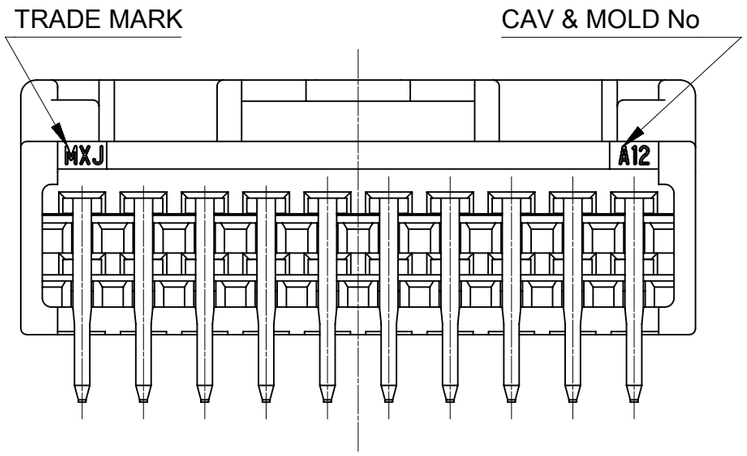

△1 TABLE 1

番号 No	部品 PART	材質 MATERIAL	
①	ターミナル TERMINAL	黄銅, BRASS	
		下地めっき UNDER PLATING	ニッケルめっき 1 micro-meter MIN NICKEL PLATING 1 micro-meter MIN
		コンタクト CONTACT	無光沢錫めっき 1 micro-meter MIN MATTE TIN PLATING 1 micro-meter MIN
		テール SOLDER TAIL	
②	ハウジング HOUSING	ポリアミド(PA)ガラス入り, UL94V-0, 色 : ナチュラル (白) POLYAMIDE(PA) GLASS FILLED, UL94V-0, COLOR : NATURAL (WHITE)	

DOCUMENT STATUS	P1	RELEASE DATE	2022/11/21 12:10:27

9.2	12	16	501876 1450	14
9.2	10	14	501876 1250	12
C	B	A	発注番号 ORDER No PACKAGING STYLE : TRAY	極数 CIRCUIT SIZE

THIS DRAWING CONTAINS INFORMATION THAT IS PROPRIETARY TO MOLEX ELECTRONIC TECHNOLOGIES, LLC AND SHOULD NOT BE USED WITHOUT WRITTEN PERMISSION

DIMENSION UNITS	SCALE
mm	NTS

GENERAL TOLERANCES (UNLESS SPECIFIED)

ANGULAR TOL	±	3.0 °
4 PLACES	±	0.2
3 PLACES	±	0.2
2 PLACES	±	0.2
1 PLACE	±	0.2
0 PLACES	±	0.2

DRAFT WHERE APPLICABLE MUST REMAIN WITHIN DIMENSIONS

CURRENT REV DESC: REVISED

EC NO: 721018
DRWN: HHUSSIN 2022/09/06
CHK'D: SAKIYAMA 2022/11/21
APPR: AIDA 2022/11/21

INITIAL REVISION:
DRWN: SNAKAMURA08 2020/02/14
APPR: KOMURAKAMI 2020/02/26

THIRD ANGLE PROJECTION | DRAWING: A3-SIZE | SERIES: 501876

molex

IGRID 2.0 PLUG ASSEMBLY
RIGHT ANGLE SHORT TAIL TIN PLATING

PRODUCT CUSTOMER DRAWING

DOCUMENT NUMBER	DOC TYPE	DOC PART	REVISION
5018760002-SD	PSD	000	B

MATERIAL NUMBER	CUSTOMER	SHEET NUMBER
	GENERAL	1 OF 2

FORMAT: master-ib-prod-A3
REVISION: J1
DATE: 2021/05/01

NOTES.

1. 材料及び仕上げ(めっき仕様) : TABLE 1 参照
   MATERIAL AND FINISHES : SEE TABLE 1
2. 製品仕様書 : PS-501646-001
   PRODUCT SPECIFICATION:PS-501646-001
3. 嵌合相手:
   MATES WITH:

リセプタクルハウジング RECEPTACLE HOUSING	501646 SERIES	
圧着端子 RECEPTACLE CRIMP TERMINAL	AWG #22-26 錫めっき AWG #22-26 TIN PLATING	501647 SERIES
	AWG #26-28 錫めっき AWG #26-28 TIN PLATING	501648 SERIES

4. アプリケーション仕様書(コネクタ取扱い説明書) : 5016460000/PS/000/-A00 (日本語), -A01 (英語)
   APPLICATION SPECIFICATION (CONNECTOR MANUAL): 5016460000/PS/000/-A00 (JAPANESE)/-A01 (ENGLISH)
5. 本製品は錫めっき品です。
   THIS PRODUCT IS A TIN PLATING.
6. 極数/2 = 偶数に適用
   APPLY FOR CIRCUIT SIZE / 2 =EVEN
7. ターミナルに錫めっきを使用している為、外観に摺動痕が付く場合があります。
   THE WOUND OF FRICTION MIGHT ADHERE TO EXTERNALS
   BECAUSE THE TIN PLATING IS USED IN TERMINAL.
8. 梱包仕様書: SPK-501876-001
   PACKING INFORMATION : SPK-501876-001
9. 本製品は 501876**40 のソルダーテール長さを短く変更した製品です。
   THIS PRODUCT IS A SHORT SOLDER TAIL LENGTH VARIATION OF 501876**40.

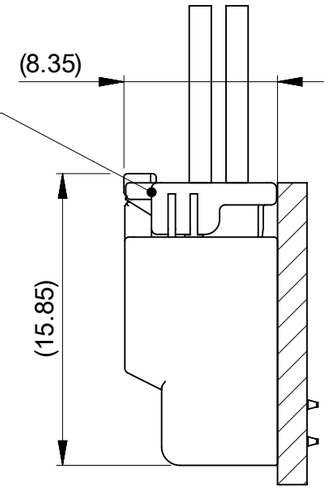

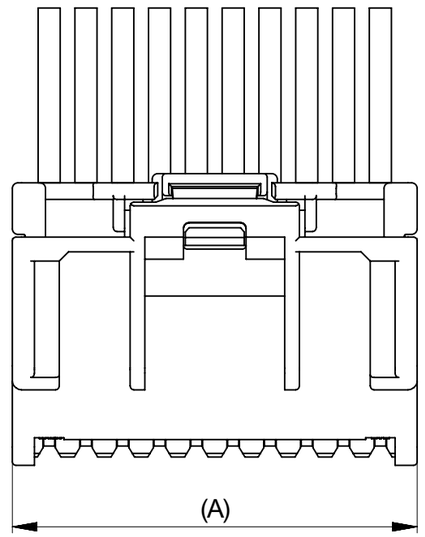

嵌合図
MATED CONNECTORS

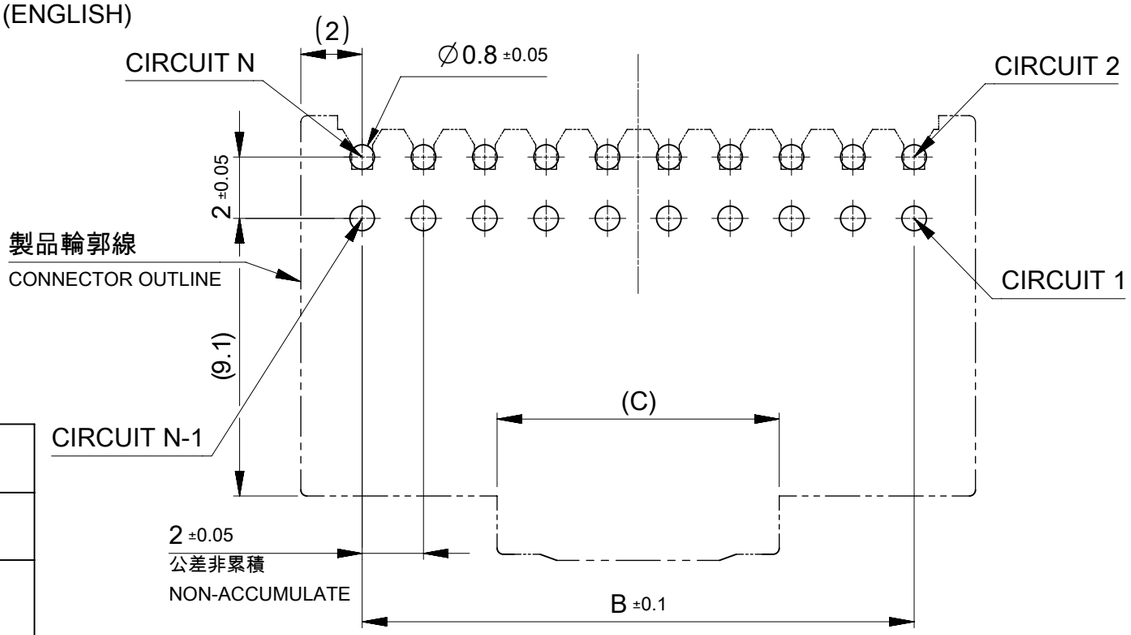

基板取付穴推奨寸法(マウント面)
RECOMMENDED PCB HOLE DIMENSION (MOUNTING SIDE)
参考基板厚 t=1.2~1.6
REFERENCE PCB THICKNESS t=1.2~1.6

SHAPE VARIATION BY CIRCUIT NUMBER

12 極 形状
FIGURE OF 12 CIRCUIT

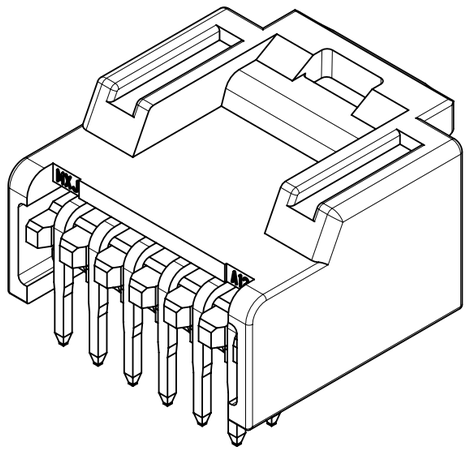

14極形状
FIGURE OF 14 CIRCUIT

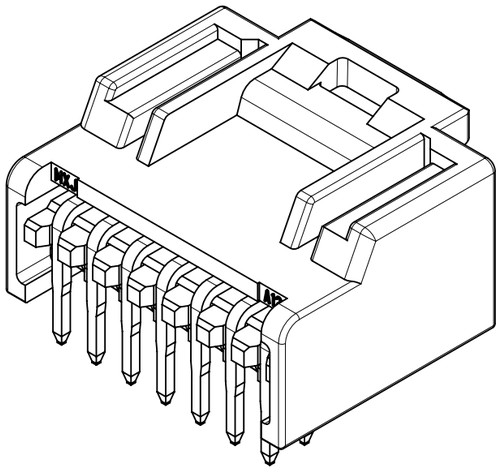

THIS DRAWING CONTAINS INFORMATION THAT IS PROPRIETARY TO MOLEX ELECTRONIC TECHNOLOGIES, LLC AND SHOULD NOT BE USED WITHOUT WRITTEN PERMISSION

DIMENSION UNITS	SCALE
mm	NTS

GENERAL TOLERANCES (UNLESS SPECIFIED)

ANGULAR TOL	±	3.0 °
4 PLACES	±	0.2
3 PLACES	±	0.2
2 PLACES	±	0.2
1 PLACE	±	0.2
0 PLACES	±	0.2

DRAFT WHERE APPLICABLE MUST REMAIN WITHIN DIMENSIONS

CURRENT REV DESC: REVISED

EC NO: 721018
DRWN: HHUSSIN 2022/09/06
CHK'D: SAKIYAMA 2022/11/21
APPR: AIDA 2022/11/21

INITIAL REVISION:
DRWN: SNAKAMURA08 2020/02/14
APPR: KOMURAKAMI 2020/02/26

THIRD ANGLE PROJECTION | DRAWING: A3-SIZE | SERIES: 501876

molex

IGRID 2.0 PLUG ASSEMBLY
RIGHT ANGLE SHORT TAIL TIN PLATING

PRODUCT CUSTOMER DRAWING

DOCUMENT NUMBER	DOC TYPE	DOC PART	REVISION
5018760002-SD	PSD	000	B

MATERIAL NUMBER	CUSTOMER	SHEET NUMBER
	GENERAL	2 OF 2

DOCUMENT STATUS	P1	RELEASE DATE	2022/11/21 12:10:27

FORMAT: master-tb-prod-A3
REVISION: J1
DATE: 2021/05/01