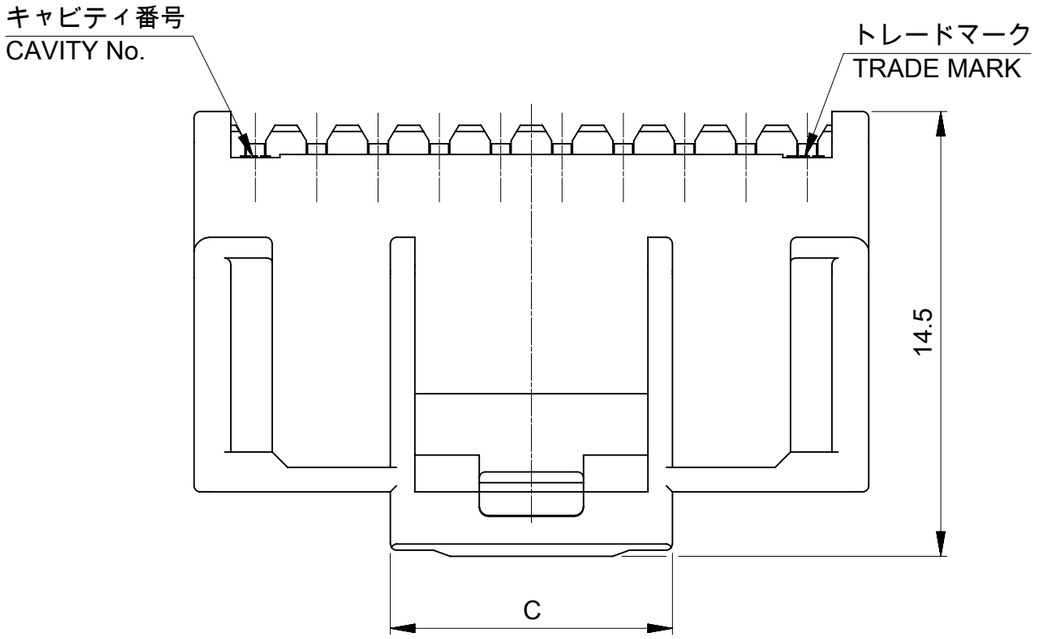


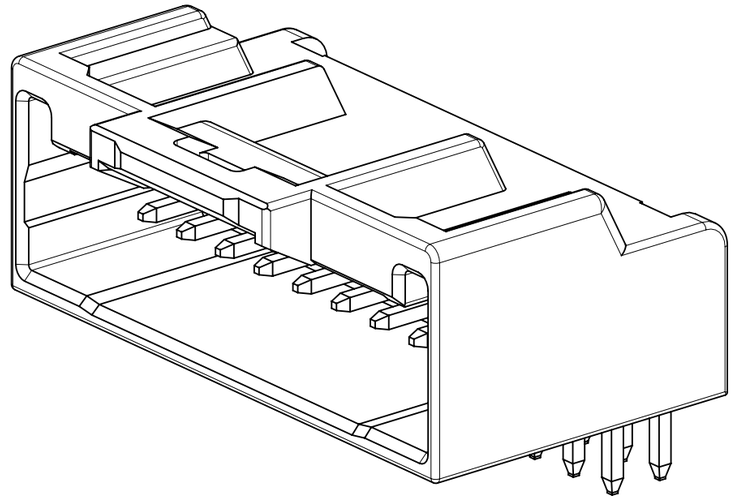

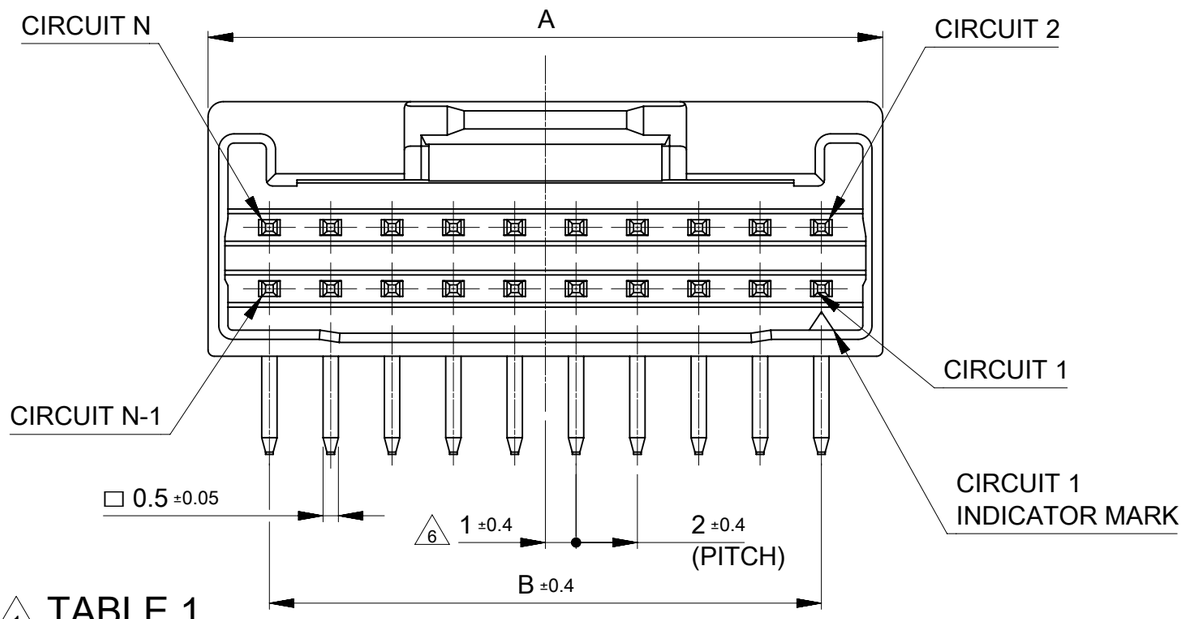


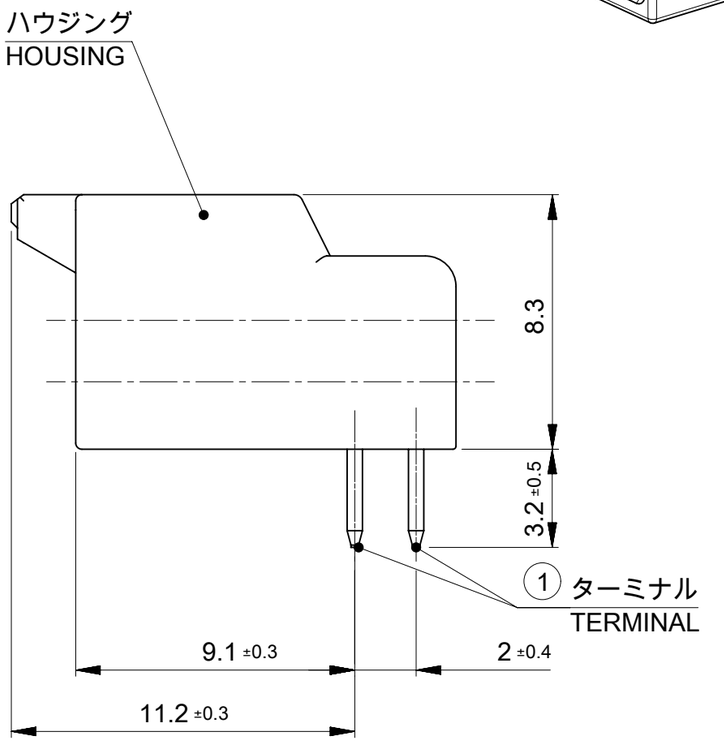


| C | B | A | 極数<br>CIRCUIT SIZE |
|---|---|---|---|
| 9.2 | 38 | 42 | 40 |
| 9.2 | 36 | 40 | 38 |
| 9.2 | 34 | 38 | 36 |
| 9.2 | 32 | 36 | 34 |
| 9.2 | 30 | 34 | 32 |
| 9.2 | 28 | 32 | 30 |
| 9.2 | 26 | 30 | 28 |
| 9.2 | 24 | 28 | 26 |
| 9.2 | 22 | 26 | 24 |
| 9.2 | 20 | 24 | 22 |
| 9.2 | 18 | 22 | 20 |
| 9.2 | 16 | 20 | 18 |
| 9.2 | 14 | 18 | 16 |
| 9.2 | 12 | 16 | 14 |
| 9.2 | 10 | 14 | 12 |
| 7.3 | 8 | 12 | 10 |

## △1 TABLE 1

| 番号<br>No. | 部品<br>PART | 材質<br>MATERIAL | |
|---|---|---|---|
| ① | ターミナル<br>TERMINAL | 黄銅, BRASS | |
| | | 下地めっき<br>UNDER PLATING | ニッケルめっき 1 micro-meter MIN<br>NICKEL PLATING 1 micro-meter MIN |
| | | コンタクト<br>CONTACT | 無光沢錫めっき 1 micro-meter MIN<br>MATTE TIN PLATING 1 micro-meter MIN |
| | | テール<br>SOLDER TAIL | |
| ② | ハウジング<br>HOUSING | ポリアミド(PA)ガラス入り, UL94V-0, 色 : SEE CHART<br>POLYAMIDE(PA) GLASS FILLED, UL94V-0, COLOR : SEE CHART | |

DOCUMENT STATUS | P1 | RELEASE DATE | 2024/04/10 10:13:55

THIS DRAWING CONTAINS INFORMATION THAT IS PROPRIETARY TO MOLEX ELECTRONIC TECHNOLOGIES, LLC AND SHOULD NOT BE USED WITHOUT WRITTEN PERMISSION

| DIMENSION UNITS | SCALE |
|---|---|
| mm | NTS |

GENERAL TOLERANCES (UNLESS SPECIFIED)

| | | |
|---|---|---|
| ANGULAR TOL | ± | 3.0 ° |
| 4 PLACES | ± | 0.2 |
| 3 PLACES | ± | 0.2 |
| 2 PLACES | ± | 0.2 |
| 1 PLACE | ± | 0.2 |
| 0 PLACES | ± | 0.2 |

DRAFT WHERE APPLICABLE MUST REMAIN WITHIN DIMENSIONS

CURRENT REV DESC: REMOVED OBSOLETED PART NUMBERS AS PER PCN#513389

EC NO: 781755
DRWN: MADHAM5 2024/03/18
CHK'D: GGA 2024/04/10
APPR: GGA 2024/04/10

INITIAL REVISION:
DRWN: SNAKAMURA08 2019/05/14
APPR: KOMURAKAMI 2019/05/24

THIRD ANGLE PROJECTION | DRAWING: A3-SIZE | SERIES: 501876

molex

IGRID 2.0 PLUG ASSEMBLY
RIGHT ANGLE TIN PLATING

PRODUCT CUSTOMER DRAWING

| DOCUMENT NUMBER | DOC TYPE | DOC PART | REVISION |
|---|---|---|---|
| 5018760000-SD | PSD | 000 | D1 |

| MATERIAL NUMBER | CUSTOMER | SHEET NUMBER |
|---|---|---|
| SEE SHEET 3 | GENERAL | 1 OF 3 |

FORMAT: master-tb-prod-A3
REVISION: J1
DATE: 2021/05/01

## NOTES.

△1 材料及び仕上げ(めっき仕様) : TABLE 1 参照
MATERIAL AND FINISHES : SEE TABLE 1

2. 製品仕様書 : PS-501646-001
PRODUCT SPECIFICATION:PS-501646-001

3. 嵌合相手:
MATES WITH:

| リセプタクルハウジング<br>RECEPTACLE HOUSING | 501646 SERIES | |
|---|---|---|
| 圧着端子<br>RECEPTACLE CRIMP TERMINAL | AWG #22-26 錫めっき<br>AWG #22-26 TIN PLATING | 501647 SERIES |
| | AWG #26-28 錫めっき<br>AWG #26-28 TIN PLATING | 501648 SERIES |

4. アプリケーション仕様書(コネクタ取扱い説明書) : 5016460000-PS A01
APPLICATION SPECIFICATION(CONNECTOR MANNUAL): 5016460000-PS A00

5. 本製品は錫めっき品です。
THIS PRODUCT IS A TIN PLATING.

△6 極数/2 = 偶数に適応
APPLY FOR CIRCUIT SIZE / 2 =EVEN

7. ターミナルに錫めっきを使用している為、外観に摺動痕が付く場合があります。
THE WOUND OF FRICTION MIGHT ADHERE TO EXTERNALS
BECAUSE THE TIN PLATING IS USED IN TERMINAL.

8, 梱包仕様書: SPK-501876-001
PACKING INFORMATION : SPK-501876-001

△9 発注番号 : SHEET 3 参照
ORDER No. : PLEASE REFER TO SHEET 3 FOR PRODUCT LIST

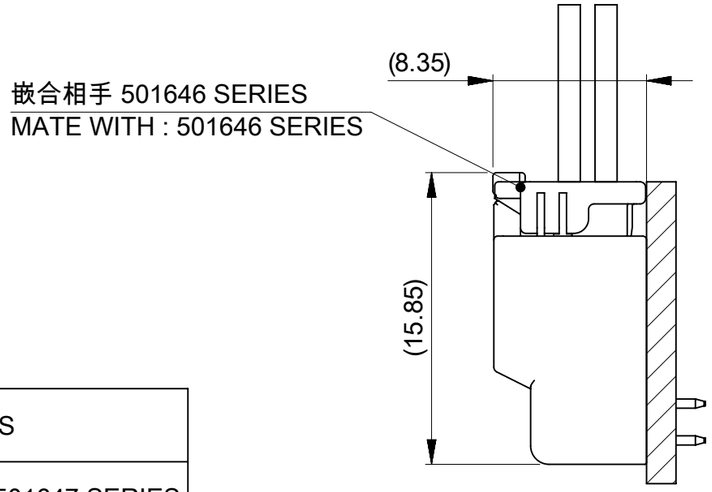


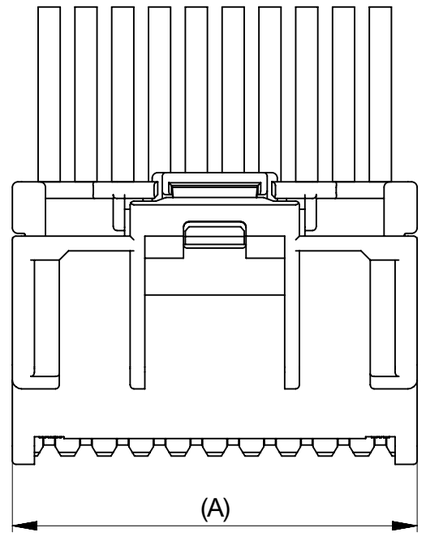


嵌合図
MATED CONNECTORS

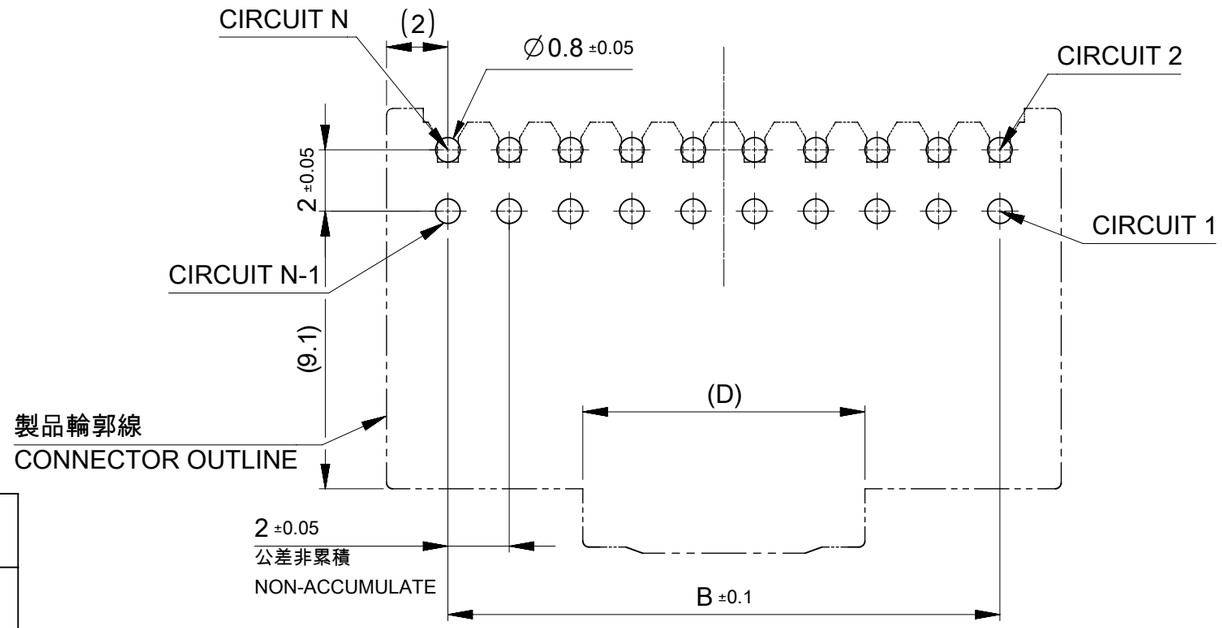


基板取付穴推奨寸法(マウント面 )
RECOMMENDED PCB HOLE DIMENSION (MOUNTING SIDE)
参考基板厚 t=1.2~1.6
REFERANCE PCB THICKNESS t=1.2~1.6

501876 **4*

極数
CIRCUIT SIZE

| ハウジングカラー<br>HOUSING COLOR |
|---|
| 0:ナチュラル NATURAL<br>(白 WHITE) |
| 1:黒 BLACK |
| 2:赤 RED |
| 4:青 BLUE |

THIS DRAWING CONTAINS INFORMATION THAT IS PROPRIETARY TO MOLEX ELECTRONIC TECHNOLOGIES, LLC AND SHOULD NOT BE USED WITHOUT WRITTEN PERMISSION

| | |
|---|---|
| DIMENSION UNITS | mm |
| SCALE | NTS |
| GENERAL TOLERANCES (UNLESS SPECIFIED) | |
| ANGULAR TOL | ± 3.0 ° |
| 4 PLACES | ± 0.2 |
| 3 PLACES | ± 0.2 |
| 2 PLACES | ± 0.2 |
| 1 PLACE | ± 0.2 |
| 0 PLACES | ± 0.2 |
| DRAFT WHERE APPLICABLE MUST REMAIN WITHIN DIMENSIONS | |

CURRENT REV DESC: REMOVED OBSOLETED PART NUMBERS AS PER PCN#513389

EC NO: 781755
DRWN: MADHAM5 2024/03/18
CHK'D: GGA 2024/04/10
APPR: GGA 2024/04/10
INITIAL REVISION:
DRWN: SNAKAMURA08 2019/05/14
APPR: KOMURAKAMI 2019/05/24

THIRD ANGLE PROJECTION | DRAWING: A3-SIZE | SERIES: 501876

molex

IGRID 2.0 PLUG ASSEMBLY
RIGHT ANGLE TIN PLATING

PRODUCT CUSTOMER DRAWING

| DOCUMENT NUMBER | DOC TYPE | DOC PART | REVISION |
|---|---|---|---|
| 5018760000-SD | PSD | 000 | D1 |

| MATERIAL NUMBER | CUSTOMER | SHEET NUMBER |
|---|---|---|
| SEE SHEET 3 | GENERAL | 2 OF 3 |

| DOCUMENT STATUS | P1 | RELEASE DATE | 2024/04/10 10:13:55 |
|---|---|---|---|

FORMAT: master-ib-prod-A3
REVISION: J1
DATE: 2021/05/01

製品形状
PRODUCT SHAPE

10, 12 極
10, 12 CIRCUIT

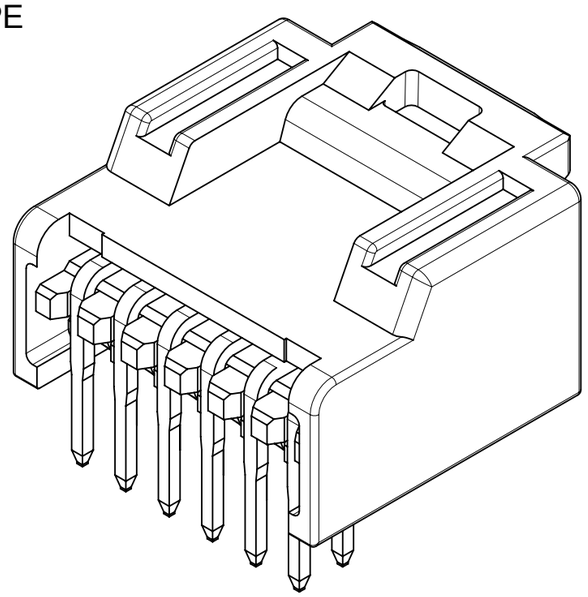

14 - 40 極
14 - 40 CIRCUIT

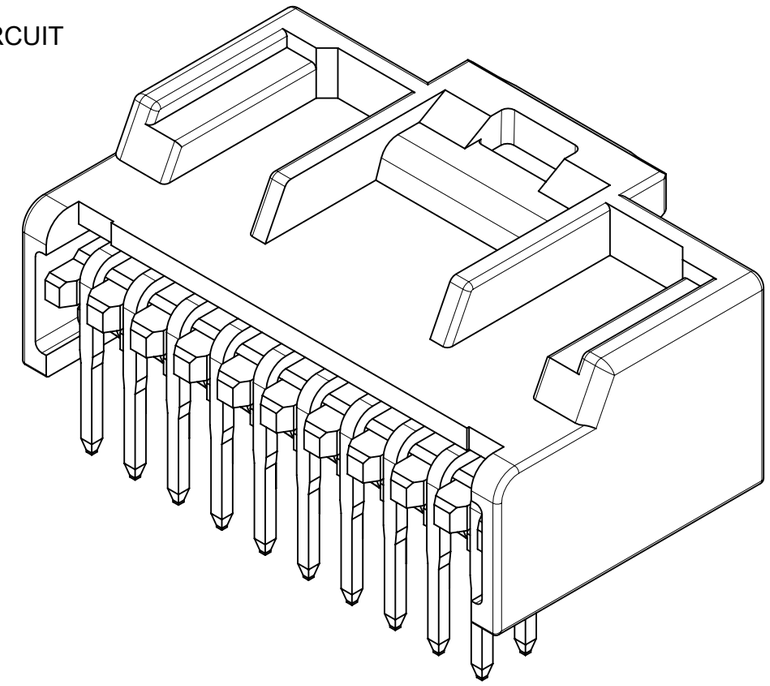

△9 製品一覧 PRODUCT LIST

| 青: BLUE | 赤: RED | 黒 : BLACK | ナチュラル : NATURAL (白 : WHITE) | HOUSING COLOR |
|---|---|---|---|---|
| 501876 4044 | 501876 4042 | 501876 4041 | 501876 4040 | 40 |
| 3844 | 3842 | 3841 | 3840 | 38 |
| 3644 | 3642 | 3641 | 3640 | 36 |
| 3444 | 3442 | 3441 | 3440 | 34 |
| 3244 | 3242 | 3241 | 3240 | 32 |
| 3044 | 3042 | 3041 | 3040 | 30 |
| 2844 | 2842 | 2841 | 2840 | 28 |
| 2644 | 2642 | 2641 | 2640 | 26 |
| 2444 | 2442 | 2441 | 2440 | 24 |
| 2244 | 2242 | 2241 | 2240 | 22 |
| 2044 | 2042 | 2041 | 2040 | 20 |
| 1844 | 1842 | 1841 | 1840 | 18 |
| 1644 | 1642 | 1641 | 1640 | 16 |
| 1444 | 1442 | 1441 | 1440 | 14 |
| 1244 | 1242 | 1241 | 1240 | 12 |
| 501876 1044 | 501876 1042 | 501876 1041 | 501876 1040 | 10 |
| 発注番号 ORDER No. | | | | 極数 |
| PACKAGING STYLE : TRAY | | | | CIRCUIT SIZE |

THIS DRAWING CONTAINS INFORMATION THAT IS PROPRIETARY TO MOLEX ELECTRONIC TECHNOLOGIES, LLC AND SHOULD NOT BE USED WITHOUT WRITTEN PERMISSION

| DIMENSION UNITS | SCALE |
|---|---|
| mm | NTS |

GENERAL TOLERANCES (UNLESS SPECIFIED)

| | |
|---|---|
| ANGULAR TOL | ± 3.0 ° |
| 4 PLACES | ± 0.2 |
| 3 PLACES | ± 0.2 |
| 2 PLACES | ± 0.2 |
| 1 PLACE | ± 0.2 |
| 0 PLACES | ± 0.2 |

DRAFT WHERE APPLICABLE MUST REMAIN WITHIN DIMENSIONS

CURRENT REV DESC: REMOVED OBSOLETED PART NUMBERS AS PER PCN#513389

EC NO: 781755
DRWN: MADHAM5 2024/03/18
CHK'D: GGA 2024/04/10
APPR: GGA 2024/04/10

INITIAL REVISION:
DRWN: SNAKAMURA08 2019/05/14
APPR: KOMURAKAMI 2019/05/24

THIRD ANGLE PROJECTION | DRAWING: A3-SIZE | SERIES: 501876

molex

IGRID 2.0 PLUG ASSEMBLY
RIGHT ANGLE TIN PLATING

PRODUCT CUSTOMER DRAWING

| DOCUMENT NUMBER | DOC TYPE | DOC PART | REVISION |
|---|---|---|---|
| 5018760000-SD | PSD | 000 | D1 |

| MATERIAL NUMBER | CUSTOMER | SHEET NUMBER |
|---|---|---|
| SEE CHART | GENERAL | 3 OF 3 |

| DOCUMENT STATUS | P1 | RELEASE DATE | 2024/04/10 10:13:55 |
|---|---|---|---|

FORMAT: master-lb-prod-A3
REVISION: J1
DATE: 2021/05/01