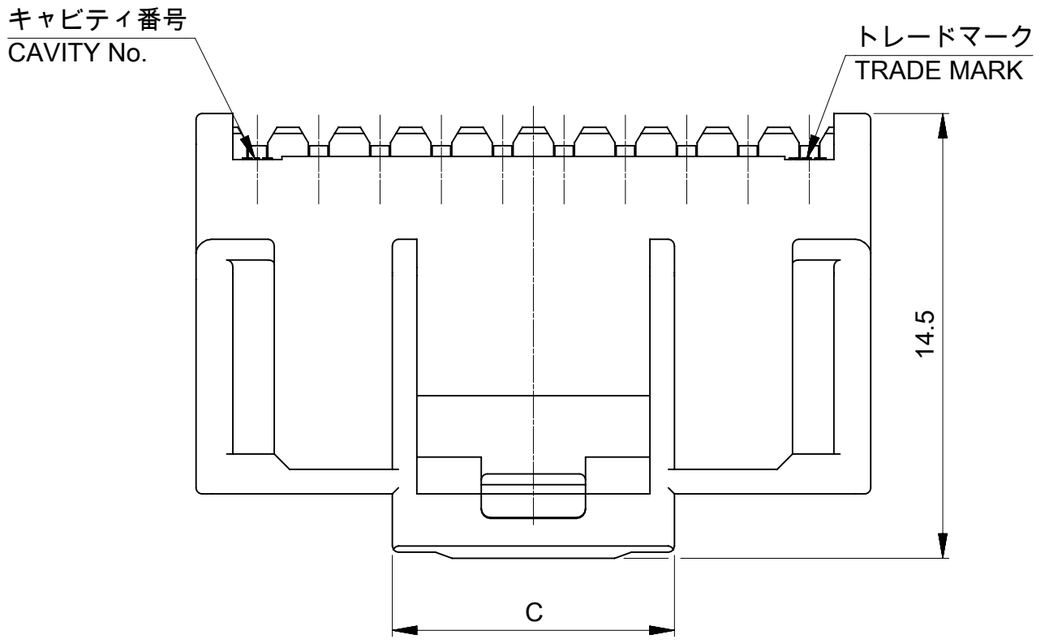

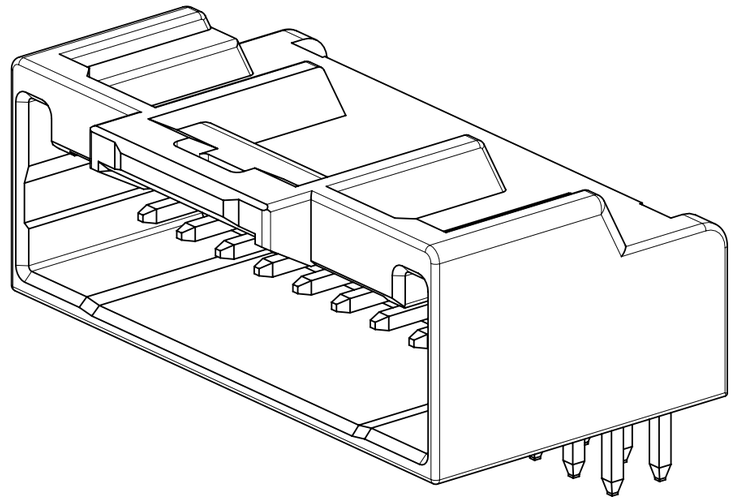

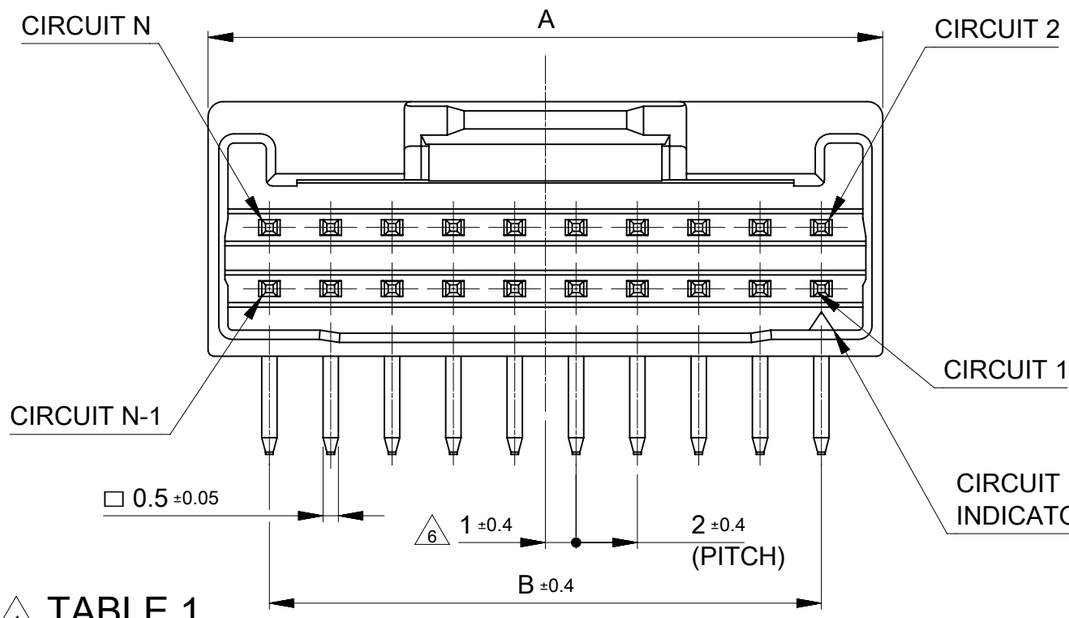

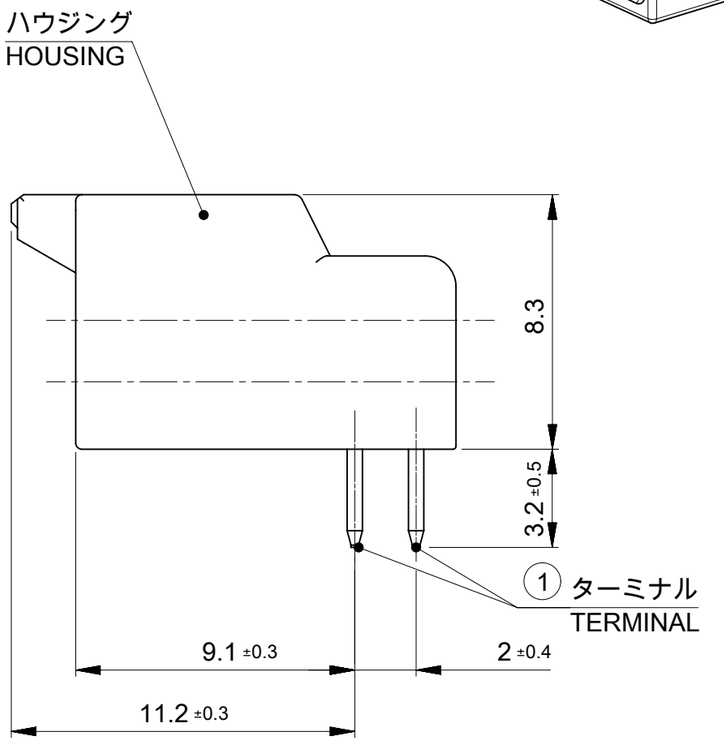

C	B	A	極数 CIRCUIT SIZE
9.2	38	42	40
9.2	36	40	38
9.2	34	38	36
9.2	32	36	34
9.2	30	34	32
9.2	28	32	30
9.2	26	30	28
9.2	24	28	26
9.2	22	26	24
9.2	20	24	22
9.2	18	22	20
9.2	16	20	18
9.2	14	18	16
9.2	12	16	14
9.2	10	14	12
7.3	8	12	10

△1 TABLE 1

番号 No.	部品 PART	材質 MATERIAL	
①	ターミナル TERMINAL	黄銅, BRASS	
		下地めっき UNDER PLATING	ニッケルめっき 1 micro-meter MIN NICKEL PLATING 1 micro-meter MIN
		コンタクト CONTACT	無光沢錫めっき 1 micro-meter MIN MATTE TIN PLATING 1 micro-meter MIN
		テール SOLDER TAIL	
②	ハウジング HOUSING	ポリアミド(PA)ガラス入り, UL94V-0, 色 : SEE CHART POLYAMIDE(PA) GLASS FILLED, UL94V-0, COLOR : SEE CHART	

THIS DRAWING CONTAINS INFORMATION THAT IS PROPRIETARY TO MOLEX ELECTRONIC TECHNOLOGIES, LLC AND SHOULD NOT BE USED WITHOUT WRITTEN PERMISSION

DIMENSION UNITS	SCALE
mm	NTS

GENERAL TOLERANCES (UNLESS SPECIFIED)

ANGULAR TOL	±	3.0 °
4 PLACES	±	0.2
3 PLACES	±	0.2
2 PLACES	±	0.2
1 PLACE	±	0.2
0 PLACES	±	0.2

DRAFT WHERE APPLICABLE MUST REMAIN WITHIN DIMENSIONS

CURRENT REV DESC: REVISED

EC NO: 721018
DRWN: HHUSSIN 2022/09/06
CHK'D: SAKIYAMA 2022/11/21
APPR: AIDA 2022/11/21

INITIAL REVISION:
DRWN: SNAKAMURA08 2019/05/14
APPR: KOMURAKAMI 2019/05/24

THIRD ANGLE PROJECTION | DRAWING: A3-SIZE | SERIES: 501876

molex

IGRID 2.0 PLUG ASSEMBLY
RIGHT ANGLE TIN PLATING

PRODUCT CUSTOMER DRAWING

DOCUMENT NUMBER	DOC TYPE	DOC PART	REVISION
5018760000-SD	PSD	000	D

MATERIAL NUMBER	CUSTOMER	SHEET NUMBER
SEE SHEET 3	GENERAL	1 OF 3

DOCUMENT STATUS	P1	RELEASE DATE	2022/11/21 12:10:26

FORMAT: master-tb-prod-A3
REVISION: J1
DATE: 2021/05/01

NOTES.

△1 材料及び仕上げ(めっき仕様) : TABLE 1 参照
MATERIAL AND FINISHES : SEE TABLE 1

2. 製品仕様書 : PS-501646-001
PRODUCT SPECIFICATION:PS-501646-001

3. 嵌合相手:
MATES WITH:

リセプタクルハウジング RECEPTACLE HOUSING	501646 SERIES	
圧着端子 RECEPTACLE CRIMP TERMINAL	AWG #22-26 錫めっき AWG #22-26 TIN PLATING	501647 SERIES
	AWG #26-28 錫めっき AWG #26-28 TIN PLATING	501648 SERIES

4. アプリケーション仕様書(コネクタ取扱い説明書) : 5016460000-PS A01
APPLICATION SPECIFICATION(CONNECTOR MANNUAL): 5016460000-PS A00

5. 本製品は錫めっき品です。
THIS PRODUCT IS A TIN PLATING.

△6 極数/2 = 偶数に適応
APPLY FOR CIRCUIT SIZE / 2 =EVEN

7. ターミナルに錫めっきを使用している為、外観に摺動痕が付く場合があります。
THE WOUND OF FRICTION MIGHT ADHERE TO EXTERNALS
BECAUSE THE TIN PLATING IS USED IN TERMINAL.

8, 梱包仕様書: SPK-501876-001
PACKING INFORMATION : SPK-501876-001

△9 発注番号 : SHEET 3 参照
ORDER No. : PLEASE REFER TO SHEET 3 FOR PRODUCT LIST

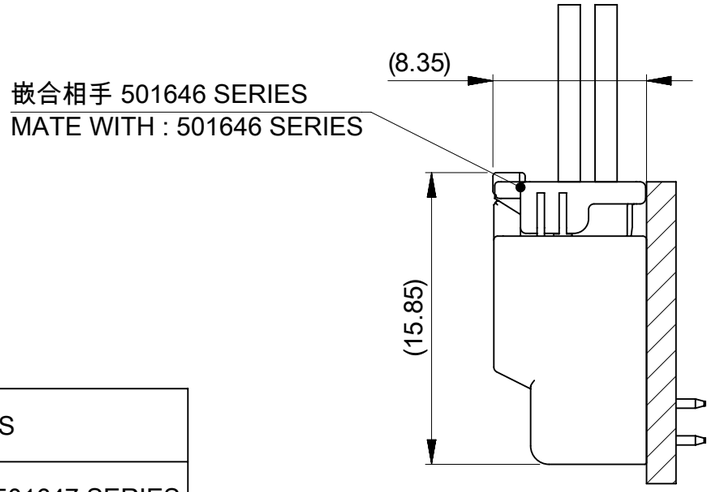

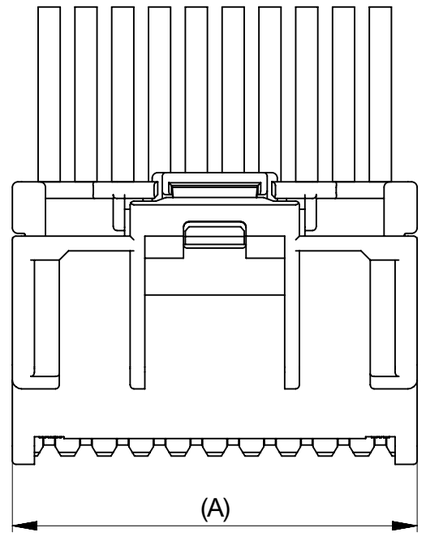

嵌合図
MATED CONNECTORS

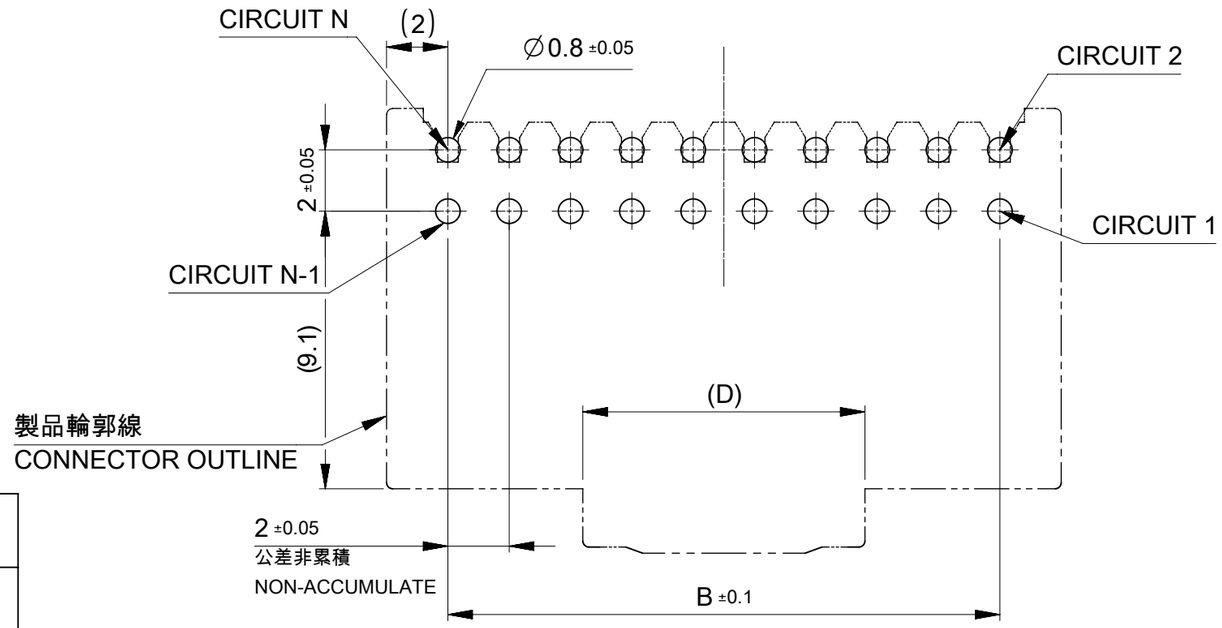

基板取付穴推奨寸法(マウント面)
RECOMMENDED PCB HOLE DIMENSION (MOUNTING SIDE)
参考基板厚 t=1.2~1.6
REFERANCE PCB THICKNESS t=1.2~1.6

501876 **4*

極数
CIRCUIT SIZE

ハウジングカラー HOUSING COLOR
0:ナチュラル NATURAL (白 WHITE)
1:黒 BLACK
2:赤 RED
4:青 BLUE
6:緑 GREEN

THIS DRAWING CONTAINS INFORMATION THAT IS PROPRIETARY TO MOLEX ELECTRONIC TECHNOLOGIES, LLC AND SHOULD NOT BE USED WITHOUT WRITTEN PERMISSION

DIMENSION UNITS	SCALE
mm	NTS

GENERAL TOLERANCES (UNLESS SPECIFIED)

ANGULAR TOL	±	3.0 °
4 PLACES	±	0.2
3 PLACES	±	0.2
2 PLACES	±	0.2
1 PLACE	±	0.2
0 PLACES	±	0.2

DRAFT WHERE APPLICABLE MUST REMAIN WITHIN DIMENSIONS

CURRENT REV DESC: REVISED

EC NO: 721018
DRWN: HHUSSIN 2022/09/06
CHK'D: SAKIYAMA 2022/11/21
APPR: AIDA 2022/11/21

INITIAL REVISION:
DRWN: SNAKAMURA08 2019/05/14
APPR: KOMURAKAMI 2019/05/24

THIRD ANGLE PROJECTION | DRAWING: A3-SIZE | SERIES: 501876

molex

IGRID 2.0 PLUG ASSEMBLY
RIGHT ANGLE TIN PLATING

PRODUCT CUSTOMER DRAWING

DOCUMENT NUMBER	DOC TYPE	DOC PART	REVISION
5018760000-SD	PSD	000	D

MATERIAL NUMBER	CUSTOMER	SHEET NUMBER
SEE SHEET 3	GENERAL	2 OF 3

DOCUMENT STATUS	P1	RELEASE DATE	2022/11/21 12:10:26

FORMAT: master-ib-prod-A3
REVISION: J1
DATE: 2021/05/01

製品形状
PRODUCT SHAPE

10, 12 極
10, 12 CIRCUIT

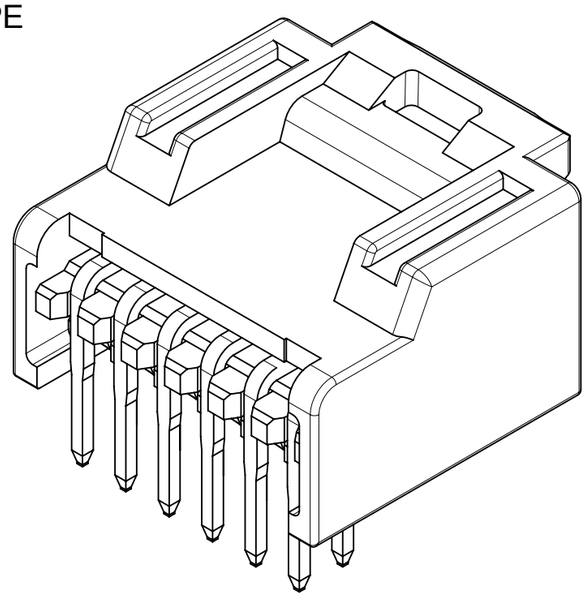

14 - 40 極
14 - 40 CIRCUIT

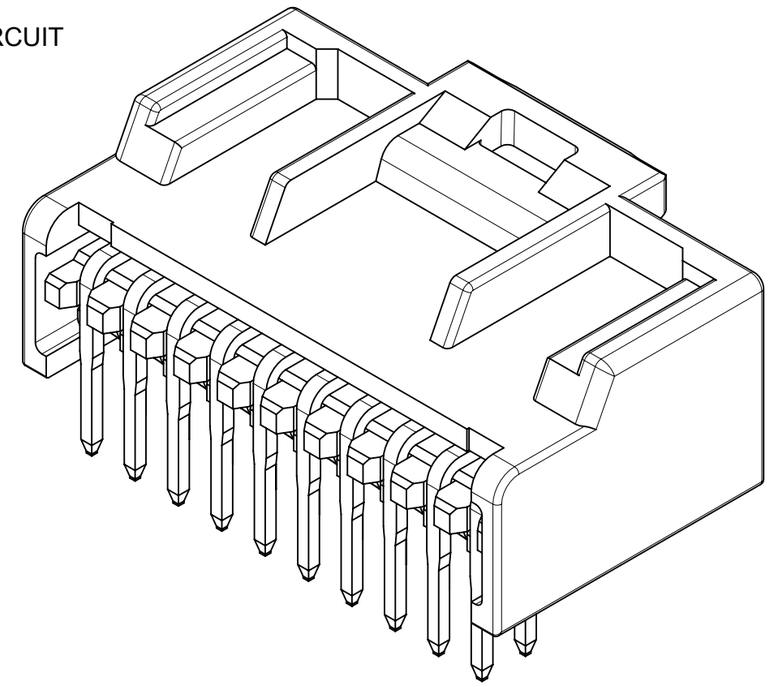

△9 製品一覧 PRODUCT LIST

緑: GREEN	青: BLUE	赤: RED	黒 : BLACK	ナチュラル : NATURAL (白 : WHITE)	HOUSING COLOR
501876 4046	501876 4044	501876 4042	501876 4041	501876 4040	40
3846	3844	3842	3841	3840	38
3646	3644	3642	3641	3640	36
3446	3444	3442	3441	3440	34
3246	3244	3242	3241	3240	32
3046	3044	3042	3041	3040	30
2846	2844	2842	2841	2840	28
2646	2644	2642	2641	2640	26
2446	2444	2442	2441	2440	24
2246	2244	2242	2241	2240	22
2046	2044	2042	2041	2040	20
1846	1844	1842	1841	1840	18
1646	1644	1642	1641	1640	16
1446	1444	1442	1441	1440	14
1246	1244	1242	1241	1240	12
501876 1046	501876 1044	501876 1042	501876 1041	501876 1040	10
発注番号 ORDER No.					極数
PACKAGING STYLE : TRAY					CIRCUIT SIZE

THIS DRAWING CONTAINS INFORMATION THAT IS PROPRIETARY TO MOLEX ELECTRONIC TECHNOLOGIES, LLC AND SHOULD NOT BE USED WITHOUT WRITTEN PERMISSION

DIMENSION UNITS	SCALE
mm	NTS

GENERAL TOLERANCES (UNLESS SPECIFIED)

ANGULAR TOL	±	3.0 °
4 PLACES	±	0.2
3 PLACES	±	0.2
2 PLACES	±	0.2
1 PLACE	±	0.2
0 PLACES	±	0.2

DRAFT WHERE APPLICABLE MUST REMAIN WITHIN DIMENSIONS

CURRENT REV DESC: REVISED

EC NO: 721018
DRWN: HHUSSIN 2022/09/06
CHK'D: SAKIYAMA 2022/11/21
APPR: AIDA 2022/11/21

INITIAL REVISION:
DRWN: SNAKAMURA08 2019/05/14
APPR: KOMURAKAMI 2019/05/24

molex

IGRID 2.0 PLUG ASSEMBLY
RIGHT ANGLE TIN PLATING

PRODUCT CUSTOMER DRAWING

DOCUMENT NUMBER	DOC TYPE	DOC PART	REVISION
5018760000-SD	PSD	000	D

THIRD ANGLE PROJECTION	DRAWING	SERIES	MATERIAL NUMBER	CUSTOMER	SHEET NUMBER
	A3-SIZE	501876	SEE CHART	GENERAL	3 OF 3

DOCUMENT STATUS	P1	RELEASE DATE	2022/11/21 12:10:26

FORMAT: master-tb-prod-A3
REVISION: J1
DATE: 2021/05/01