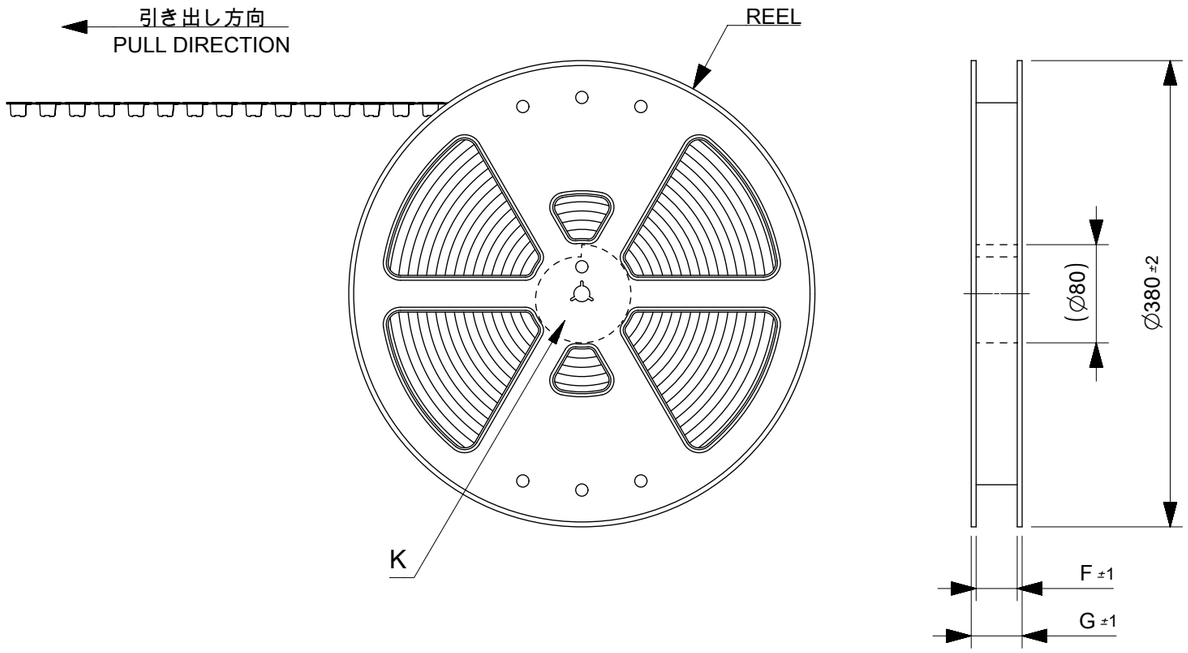

NOTES
1. 製品詳細寸法については 5019511008-SDを参照下さい。
   FOR DIMENSIONS OF PRODUCT, REFER TO 5019511008-SD.
2. 梱包数量 : 2000個/リール
   NUMBER OF CONNECTORS : 2000PIECES/REEL
3. リードテープ長さ
   LEAD TAPE LENGTH

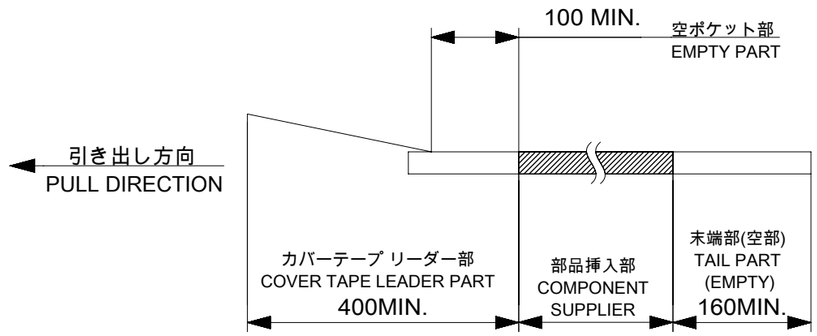

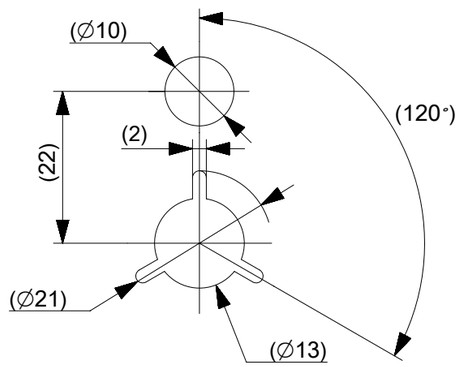

DETAIL K

4.カバーテープの剥離強度については、IEC60286-3に準拠。
   COVER TAPE PEEL FORCE IS DEFINED BY IEC60286-3.
5.材料　MATERIAL
   キャリアテープ : ポリスチレン
   CARRIER TAPE : POLYSTYRENE
   カバーテープ : ポリエチレンテレフタレート、ポリエチレン
   COVER TAPE : POLYETHYLENE TEREPHTHALATE , POLYETHYLENE
   リール : ポリスチレン<リサイクル材を含む>
   REEL : POLYSTYRENE<RECYCLE MATERIAL CONTAINED>

THIS DRAWING CONTAINS INFORMATION THAT IS PROPRIETARY TO MOLEX ELECTRONIC TECHNOLOGIES, LLC AND SHOULD NOT BE USED WITHOUT WRITTEN PERMISSION

DIMENSION UNITS	SCALE
mm	1:1

GENERAL TOLERANCES (UNLESS SPECIFIED)		
ANGULAR TOL	±	1.0 °
4 PLACES	±	0.2
3 PLACES	±	0.2
2 PLACES	±	0.2
1 PLACE	±	0.25
0 PLACES	±	0.3

DRAFT WHERE APPLICABLE MUST REMAIN WITHIN DIMENSIONS

CURRENT REV DESC:

EC NO: 613264
DRWN: SKAWAKAMI 2019/03/06
CHK'D: TRSUZUKI 2019/03/06
APPR: RTAKEUCHI 2019/03/06

INITIAL REVISION:
DRWN: SKAWAKAMI 2019/01/30
APPR: RTAKEUCHI 2019/02/01

THIRD ANGLE PROJECTION | DRAWING: A3-SIZE | SERIES: 501951

molex

0.5 FPC CONN. EMBSTP PKG
EASY ON VERTICAL (LOW-HALOGEN)

PRODUCT CUSTOMER DRAWING

DOCUMENT NUMBER	DOC TYPE	DOC PART	REVISION
5019510008-SD	PSD	000	C

MATERIAL NUMBER	CUSTOMER	SHEET NUMBER
SEE TABLE		1 OF 3

DOCUMENT STATUS	P1	RELEASE DATE	2019/03/06 09:44:53

FORMAT: master-tb-prod-A3
REVISION: H
DATE: 2018/01/18

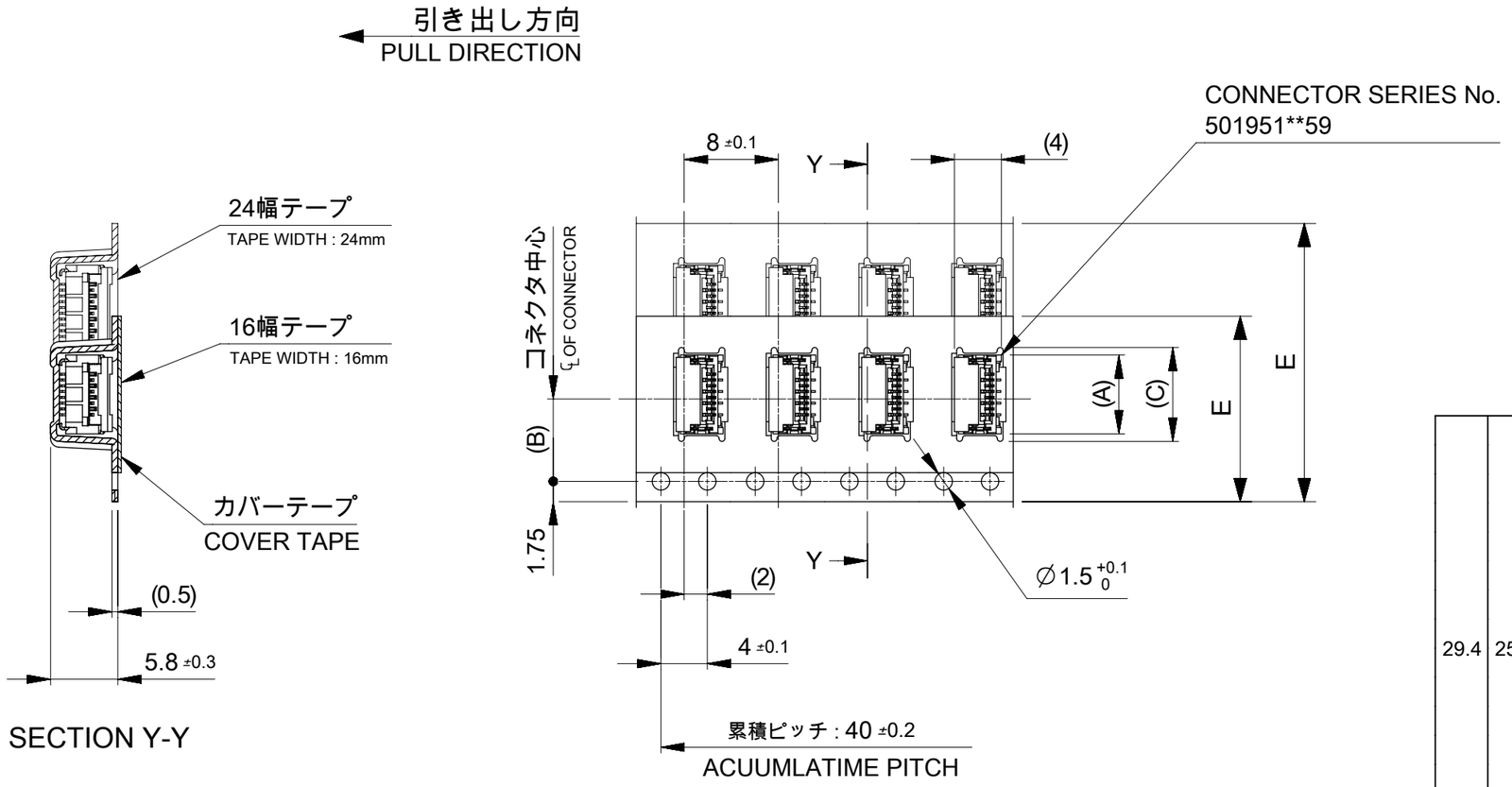

G	F	E CARRIER TAPE WIDTH	D	(C)	(B)	(A)	EMBOSSED PACKAGE ORDER NO.	CIRCUITS
29.4	25.4	24	—	15.1	11.5	14.1	5019512250	22
				14.6		13.6	5019512150	21
				14.1		13.1	5019512050	20
				13.6		12.6	5019511950	19
				13.1		12.1	5019511850	18
				12.6		11.6	5019511750	17
				12.1		11.1	5019511650	16
				11.6		10.6	5019511550	15
				11.1		10.1	5019511450	14
				10.6		9.6	5019511350	13
				10.1		9.1	5019511250	12
				9.6		8.6	5019511150	11
				9.1		8.1	5019511050	10
				8.6		7.6	5019510950	9
				8.1		7.1	5019510850	8
				7.6		6.6	5019510750	7
21.4	17.4	16		7.1	7.5	6.1	5019510650	6
				6.6		5.6	5019510550	5
				6.1		5.1	5019510450	4

THIS DRAWING CONTAINS INFORMATION THAT IS PROPRIETARY TO MOLEX ELECTRONIC TECHNOLOGIES, LLC AND SHOULD NOT BE USED WITHOUT WRITTEN PERMISSION

DIMENSION UNITS	mm
SCALE	1:1
GENERAL TOLERANCES (UNLESS SPECIFIED)	
ANGULAR TOL	± 1.0 °
4 PLACES	± 0.2
3 PLACES	± 0.2
2 PLACES	± 0.2
1 PLACE	± 0.25
0 PLACES	± 0.3
DRAFT WHERE APPLICABLE MUST REMAIN WITHIN DIMENSIONS	

CURRENT REV DESC:

EC NO: 613264
DRWN: SKAWAKAMI 2019/03/06
CHK'D: TRSUZUKI 2019/03/06
APPR: RTAKEUCHI 2019/03/06

INITIAL REVISION:
DRWN: SKAWAKAMI 2019/01/30
APPR: RTAKEUCHI 2019/02/01

THIRD ANGLE PROJECTION | DRAWING: A3-SIZE | SERIES: 501951

molex

0.5 FPC CONN. EMBSTP PKG
EASY ON VERTICAL (LOW-HALOGEN)

PRODUCT CUSTOMER DRAWING

DOCUMENT NUMBER	DOC TYPE	DOC PART	REVISION
5019510008-SD	PSD	000	C

MATERIAL NUMBER	CUSTOMER	SHEET NUMBER
SEE TABLE		2 OF 3

DOCUMENT STATUS	P1	RELEASE DATE	2019/03/06 09:44:53

FORMAT: master-tb-prod-A3
REVISION: H
DATE: 2018/01/18

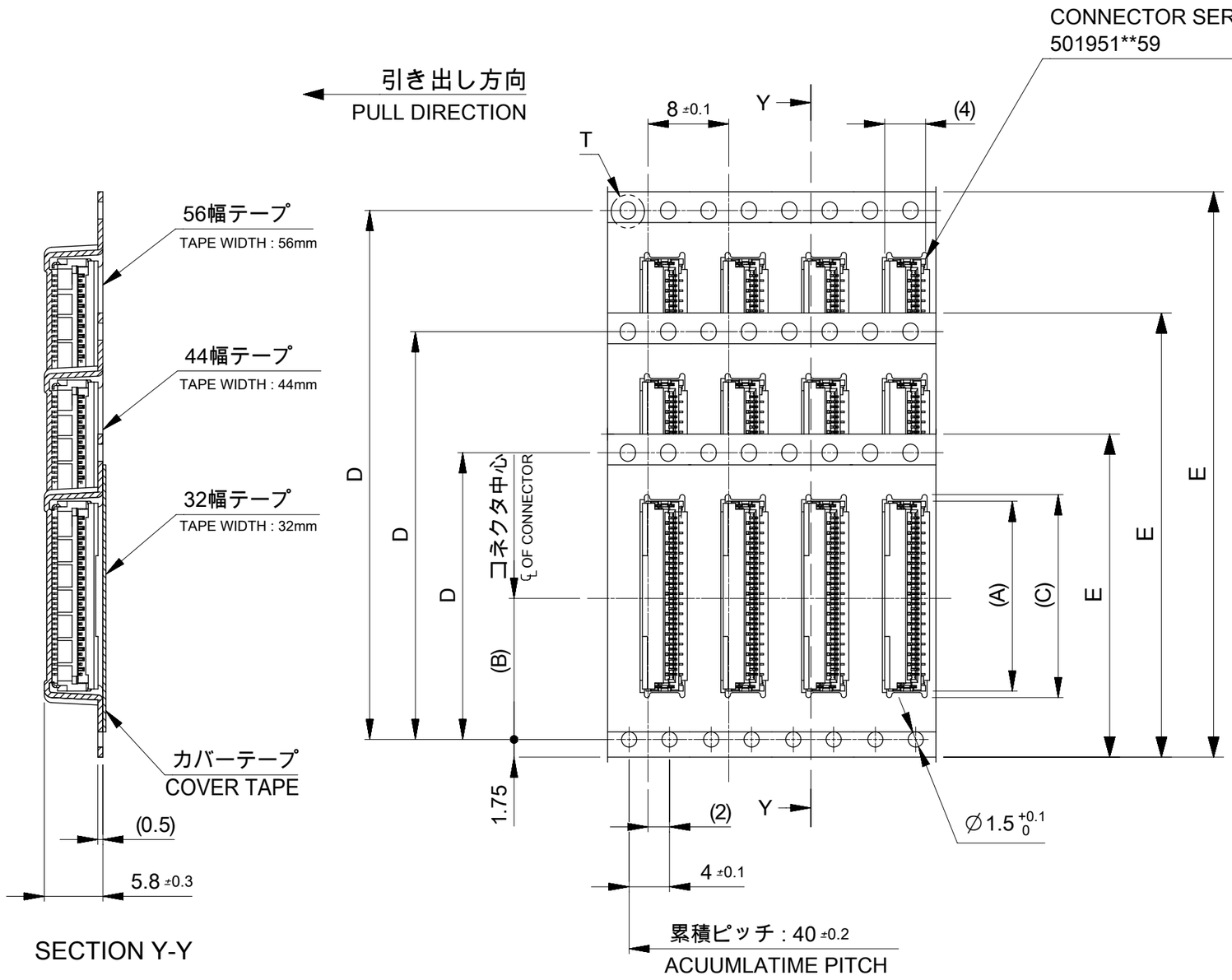

G	F	E CARRIER TAPE WIDTH	D	(C)	(B)	(A)	EMBOSSED PACKAGE ORDER NO.	CIRCUITS
61.4	57.4	56	52.4	39.1	26.2	38.1	5019517050	70
				34.1		33.1	5019516050	60
				33.6		32.6	5019515950	59
				33.1		32.1	5019515850	58
				32.6		31.6	5019515750	57
49.4	45.4	44	40.4	32.1	20.2	31.1	5019515650	56
				31.6		30.6	5019515550	55
				31.1		30.1	5019515450	54
				30.6		29.6	5019515350	53
				30.1		29.1	5019515250	52
				29.6		28.6	5019515150	51
				29.1		28.1	5019515050	50
				28.6		27.6	5019514950	49
				28.1		27.1	5019514850	48
				27.6		26.6	5019514750	47
				27.1		26.1	5019514650	46
				26.6		25.6	5019514550	45
				26.1		25.1	5019514450	44
				25.6		24.6	5019514350	43
				25.1		24.1	5019514250	42
				24.6		23.6	5019514150	41
				24.1		23.1	5019514050	40
				23.6		22.6	5019513950	39
				23.1		22.1	5019513850	38
				22.6		21.6	5019513750	37
				22.1		21.1	5019513650	36
				21.6		20.6	5019513550	35
				21.1		20.1	5019513450	34
				20.6		19.6	5019513350	33
37.4	33.4	32	28.4	20.1	14.2	19.1	5019513250	32
				19.6		18.6	5019513150	31
				19.1		18.1	5019513050	30
				18.6		17.6	5019512950	29
				18.1		17.1	5019512850	28
				17.6		16.6	5019512750	27
				17.1		16.1	5019512650	26
				16.6		15.6	5019512550	25
				16.1		15.1	5019512450	24
				15.6		14.6	5019512350	23

THIS DRAWING CONTAINS INFORMATION THAT IS PROPRIETARY TO MOLEX ELECTRONIC TECHNOLOGIES, LLC AND SHOULD NOT BE USED WITHOUT WRITTEN PERMISSION

DIMENSION UNITS	SCALE
mm	1:1

GENERAL TOLERANCES (UNLESS SPECIFIED)	
ANGULAR TOL	± 1.0 °
4 PLACES	± 0.2
3 PLACES	± 0.2
2 PLACES	± 0.2
1 PLACE	± 0.25
0 PLACES	± 0.3

DRAFT WHERE APPLICABLE MUST REMAIN WITHIN DIMENSIONS

CURRENT REV DESC:

EC NO: 613264
DRWN: SKAWAKAMI 2019/03/06
CHK'D: TRSUZUKI 2019/03/06
APPR: RTAKEUCHI 2019/03/06

INITIAL REVISION:
DRWN: SKAWAKAMI 2019/01/30
APPR: RTAKEUCHI 2019/02/01

molex

0.5 FPC CONN. EMBSTP PKG
EASY ON VERTICAL (LOW-HALOGEN)

PRODUCT CUSTOMER DRAWING

DOCUMENT NUMBER	DOC TYPE	DOC PART	REVISION
5019510008-SD	PSD	000	C

THIRD ANGLE PROJECTION	DRAWING	SERIES	MATERIAL NUMBER	CUSTOMER	SHEET NUMBER
	A3-SIZE	501951	SEE TABLE		3 OF 3

DOCUMENT STATUS	P1	RELEASE DATE	2019/03/06 09:44:53

FORMAT: master-lb-prod-A3
REVISION: H
DATE: 2018/01/18

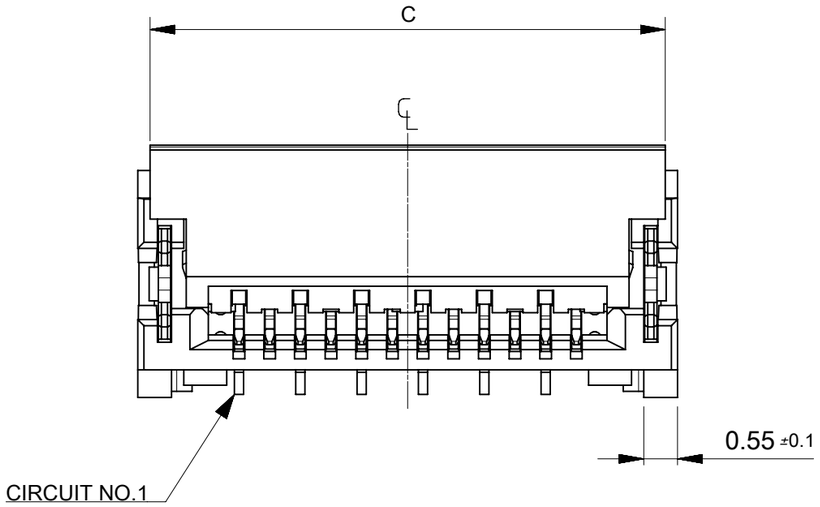

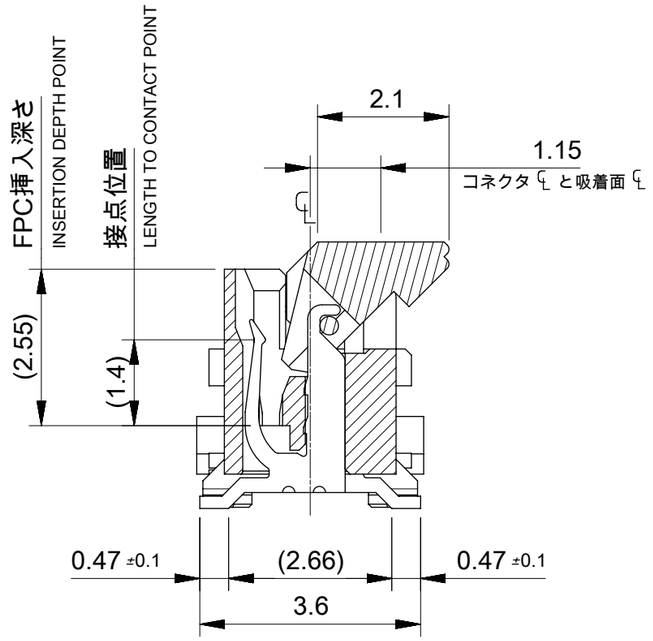

断面図（参考）

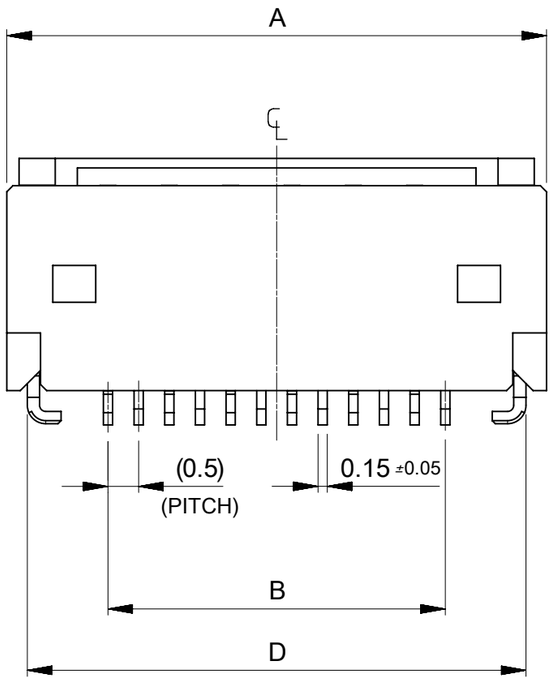

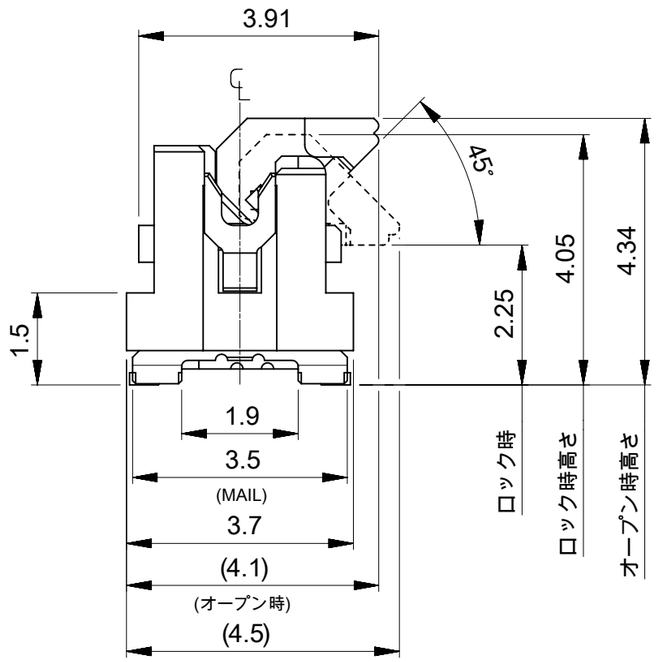

7.7	9.1	9.4	6.5	9.8	5019511450	14
7.2	8.6	8.9	6	9.3	5019511350	13
6.7	8.1	8.4	5.5	8.8	5019511250	12
6.2	7.6	7.9	5	8.3	5019511150	11
5.7	7.1	7.4	4.5	7.8	5019511050	10
5.2	6.6	6.9	4	7.3	5019510950	9
4.7	6.1	6.4	3.5	6.8	5019510850	8
4.2	5.6	5.9	3	6.3	5019510750	7
3.7	5.1	5.4	2.5	5.8	5019510650	6
3.2	4.6	4.9	2	5.3	5019510550	5
2.7	4.1	4.4	1.5	4.8	5019510450	4
E	D	C	B	A	EMBOSSED TAPE ORDER NO.	CIRCUITS

THIS DRAWING CONTAINS INFORMATION THAT IS PROPRIETARY TO MOLEX ELECTRONIC TECHNOLOGIES, LLC AND SHOULD NOT BE USED WITHOUT WRITTEN PERMISSION

DIMENSION UNITS	mm
SCALE	10:1
GENERAL TOLERANCES (UNLESS SPECIFIED)	
ANGULAR TOL	± 1.0 °
4 PLACES	± 0.2
3 PLACES	± 0.2
2 PLACES	± 0.2
1 PLACE	± 0.2
0 PLACES	± 0.2
DRAFT WHERE APPLICABLE MUST REMAIN WITHIN DIMENSIONS	

CURRENT REV DESC:

EC NO: 613264
DRWN: SKAWAKAMI 2019/03/06
CHK'D: TRSUZUKI 2019/03/06
APPR: RTAKEUCHI 2019/03/06

INITIAL REVISION:
DRWN: SKAWAKAMI 2019/01/30
APPR: RTAKEUCHI 2019/02/01

THIRD ANGLE PROJECTION | DRAWING: A3-SIZE | SERIES: 501951

molex

0.5 FPC CONN. HSG ASSY
EASY ON VERTICAL (LOW-HALOGEN)

PRODUCT CUSTOMER DRAWING

DOCUMENT NUMBER	DOC TYPE	DOC PART	REVISION
5019511008-SD	PSD	000	C

MATERIAL NUMBER	CUSTOMER	SHEET NUMBER
SEE CHART		1 OF 4

DOCUMENT STATUS	P1	RELEASE DATE	2019/03/06 09:44:57

CONNECTOR SERIES NO. 501951**59

FORMAT: master-lb-prod-A3
REVISION: H
DATE: 2018/01/18

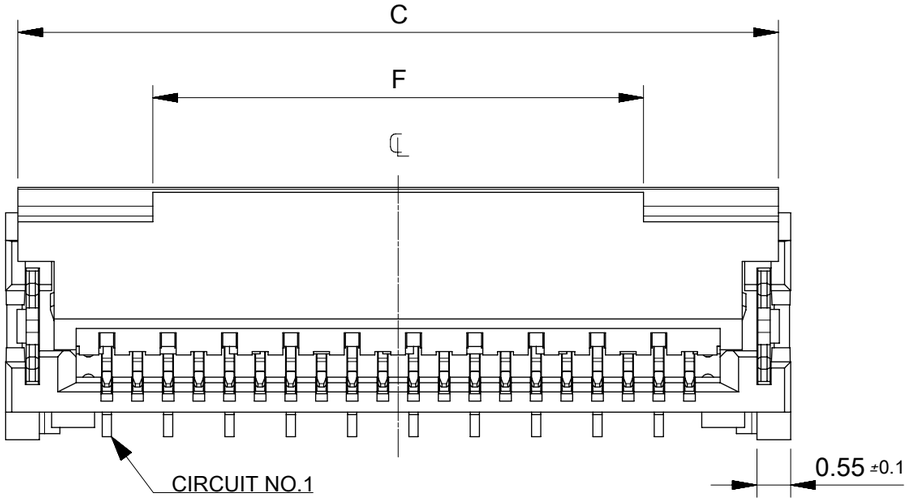

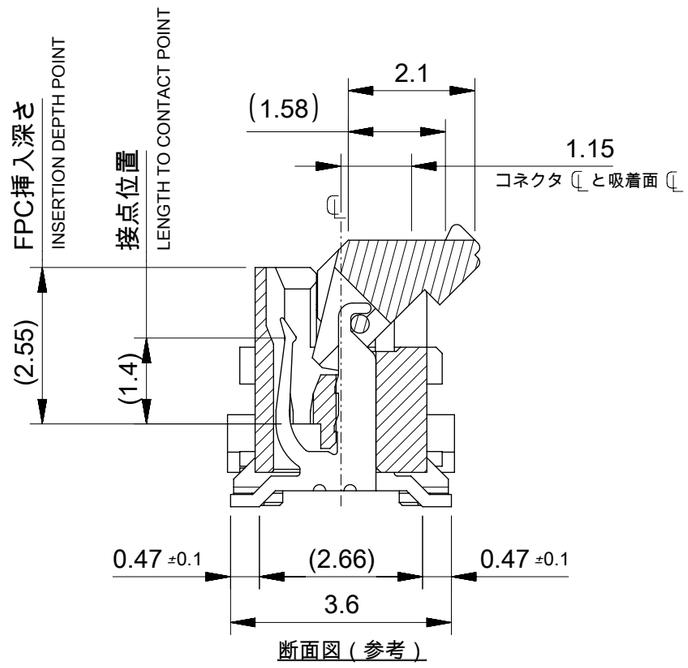

断面図（参考）

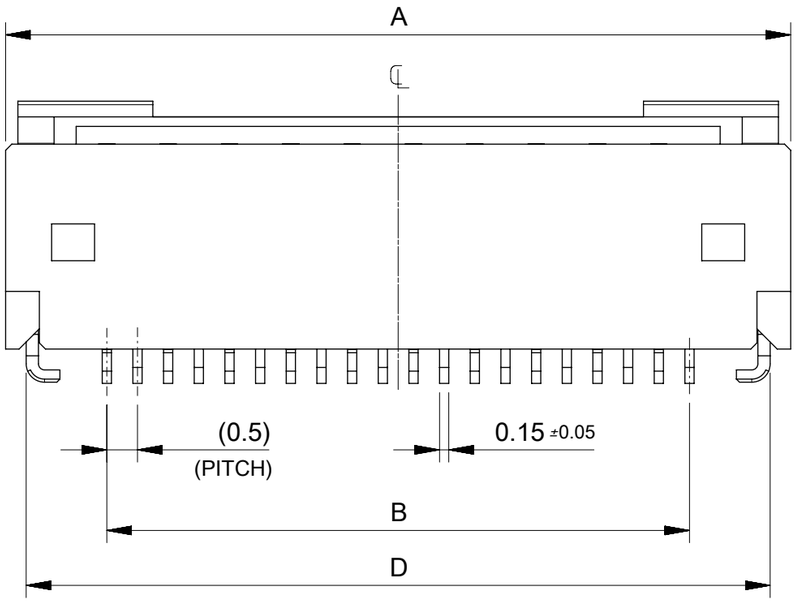

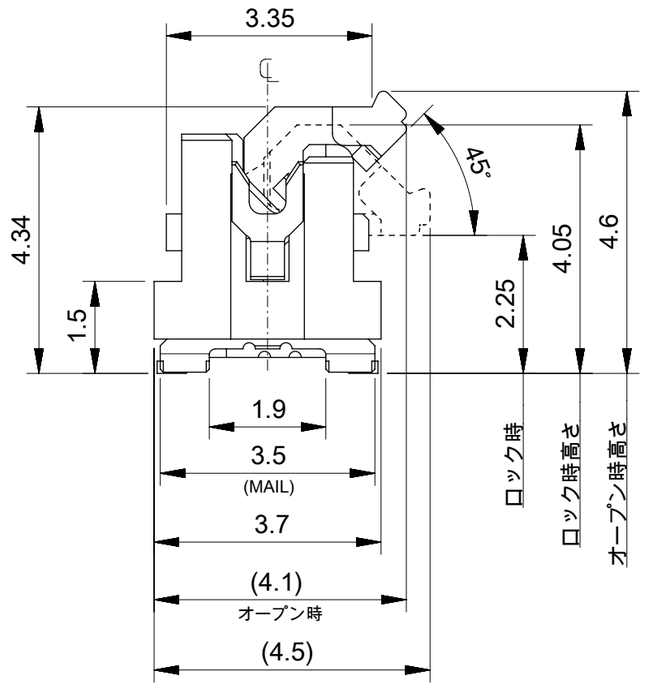

	35.7	37.1	37.4	34.5	37.8	5019517050	70
	30.7	32.1	32.4	29.5	32.8	5019516050	60
	30.2	31.6	31.9	29	32.3	5019515950	59
	29.7	31.1	31.4	28.5	31.8	5019515850	58
	29.2	30.6	30.9	28	31.3	5019515750	57
	28.7	30.1	30.4	27.5	30.8	5019515650	56
	28.2	29.6	29.9	27	30.3	5019515550	55
	27.7	29.1	29.4	26.5	29.8	5019515450	54
	27.2	28.6	28.9	26	29.3	5019515350	53
	26.7	28.1	28.4	25.5	28.8	5019515250	52
	26.2	27.6	27.9	25	28.3	5019515150	51
	25.7	27.1	27.4	24.5	27.8	5019515050	50
	25.2	26.6	26.9	24	27.3	5019514950	49
	24.7	26.1	26.4	23.5	26.8	5019514850	48
	24.2	25.6	25.9	23	26.3	5019514750	47
	23.7	25.1	25.4	22.5	25.8	5019514650	46
	23.2	24.6	24.9	22	25.3	5019514550	45
	22.7	24.1	24.4	21.5	24.8	5019514450	44
	22.2	23.6	23.9	21	24.3	5019514350	43
	21.7	23.1	23.4	20.5	23.8	5019514250	42
	21.2	22.6	22.9	20	23.3	5019514150	41
	20.7	22.1	22.4	19.5	22.8	5019514050	40
	20.2	21.6	21.9	19	22.3	5019513950	39
8	19.7	21.1	21.4	18.5	21.8	5019513850	38
	19.2	20.6	20.9	18	21.3	5019513750	37
	18.7	20.1	20.4	17.5	20.8	5019513650	36
	18.2	19.6	19.9	17	20.3	5019513550	35
	17.7	19.1	19.4	16.5	19.8	5019513450	34
	17.2	18.6	18.9	16	19.3	5019513350	33
	16.7	18.1	18.4	15.5	18.8	5019513250	32
	16.2	17.6	17.9	15	18.3	5019513150	31
	15.7	17.1	17.4	14.5	17.8	5019513050	30
	15.2	16.6	16.9	14	17.3	5019512950	29
	14.7	16.1	16.4	13.5	16.8	5019512850	28
	14.2	15.6	15.9	13	16.3	5019512750	27
	13.7	15.1	15.4	12.5	15.8	5019512650	26
	13.2	14.6	14.9	12	15.3	5019512550	25
	12.7	14.1	14.4	11.5	14.8	5019512450	24
	12.2	13.6	13.9	11	14.3	5019512350	23
	11.7	13.1	13.4	10.5	13.8	5019512250	22
	11.2	12.6	12.9	10	13.3	5019512150	21
	10.7	12.1	12.4	9.5	12.8	5019512050	20
	10.2	11.6	11.9	9	12.3	5019511950	19
	9.7	11.1	11.4	8.5	11.8	5019511850	18
	9.2	10.6	10.9	8	11.3	5019511750	17
	8.7	10.1	10.4	7.5	10.8	5019511650	16
	8.2	9.6	9.9	7	10.3	5019511550	15
F	E	D	C	B	A	EMBOSSED PACKAGE ORDER NO.	CIRCUITS

THIS DRAWING CONTAINS INFORMATION THAT IS PROPRIETARY TO MOLEX ELECTRONIC TECHNOLOGIES, LLC AND SHOULD NOT BE USED WITHOUT WRITTEN PERMISSION

DIMENSION UNITS	SCALE
mm	10:1

GENERAL TOLERANCES (UNLESS SPECIFIED)

ANGULAR TOL	±	1.0 °
4 PLACES	±	0.2
3 PLACES	±	0.2
2 PLACES	±	0.2
1 PLACE	±	0.2
0 PLACES	±	0.2

DRAFT WHERE APPLICABLE MUST REMAIN WITHIN DIMENSIONS

CURRENT REV DESC:

EC NO: 613264
DRWN: SKAWAKAMI 2019/03/06
CHK'D: TRSUZUKI 2019/03/06
APPR: RTAKEUCHI 2019/03/06

INITIAL REVISION:
DRWN: SKAWAKAMI 2019/01/30
APPR: RTAKEUCHI 2019/02/01

THIRD ANGLE PROJECTION | DRAWING: A3-SIZE | SERIES: 501951

molex

0.5 FPC CONN. HSG ASSY
EASY ON VERTICAL (LOW-HALOGEN)

PRODUCT CUSTOMER DRAWING

DOCUMENT NUMBER	DOC TYPE	DOC PART	REVISION
5019511008-SD	PSD	000	C

MATERIAL NUMBER	CUSTOMER	SHEET NUMBER
SEE CHART		2 OF 4

DOCUMENT STATUS	P1	RELEASE DATE	2019/03/06 09:44:57

CONNECTOR SERIES NO. 501951**59

FORMAT: master-tb-prod-A3
REVISION: H
DATE: 2018/01/18

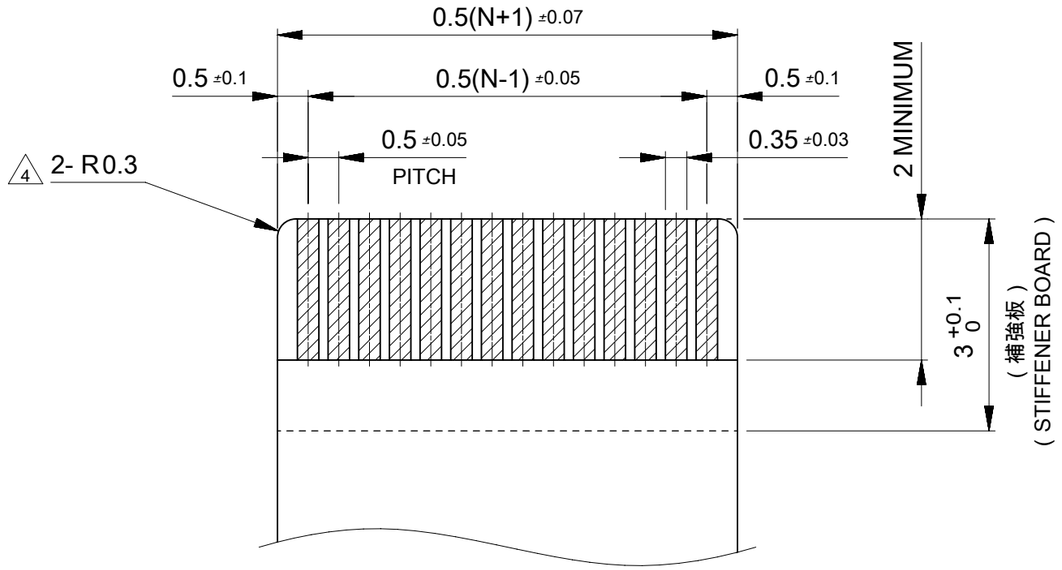

適合FPC推奨寸法
APPLICABLE FPC
RECOMMENDED DIMENSION
(仕上がり厚さ：0.3±0.05)
(THICKNESS：0.3±0.05)

N：極数
N：CIRCUITS

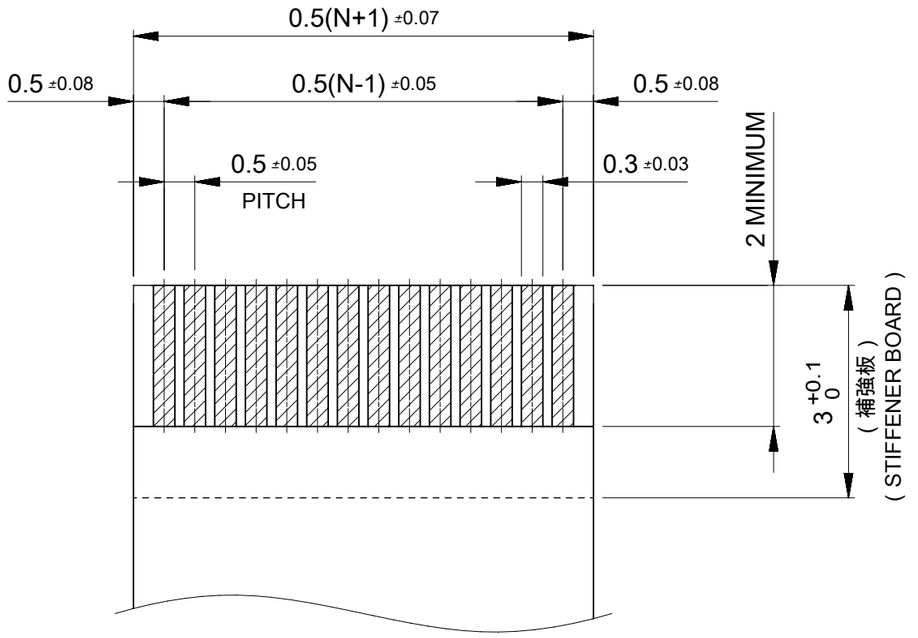

適合FFC推奨寸法
APPLICABLE FFC
RECOMMENDED DIMENSION
(仕上がり厚さ：0.3±0.05)
(THICKNESS：0.3±0.05)

N：極数
N：CIRCUITS

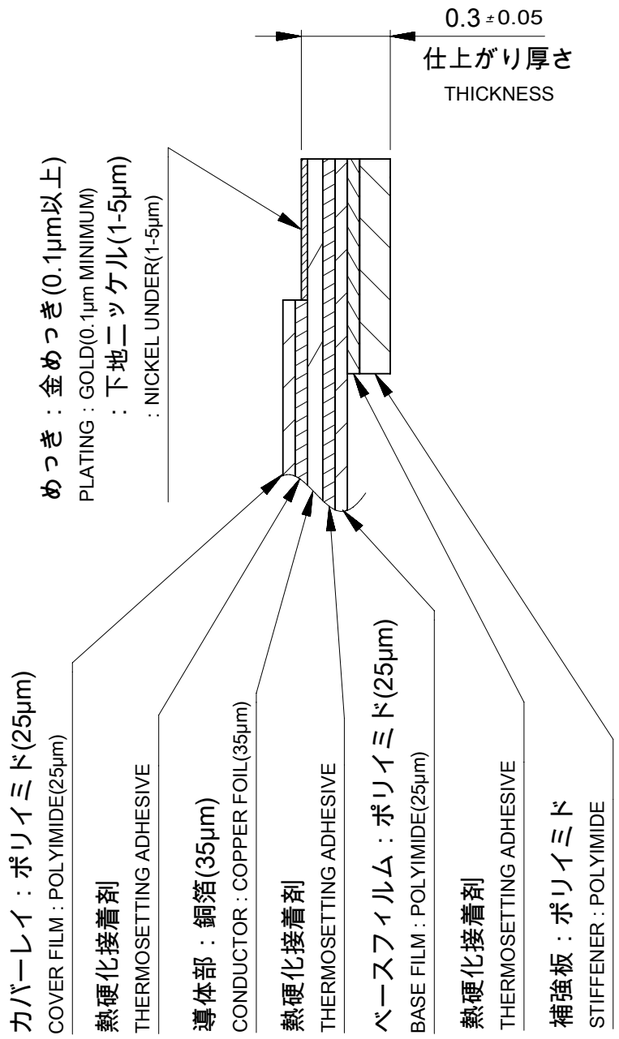

FPC構成推奨仕様
STRUCTURE OF FPC

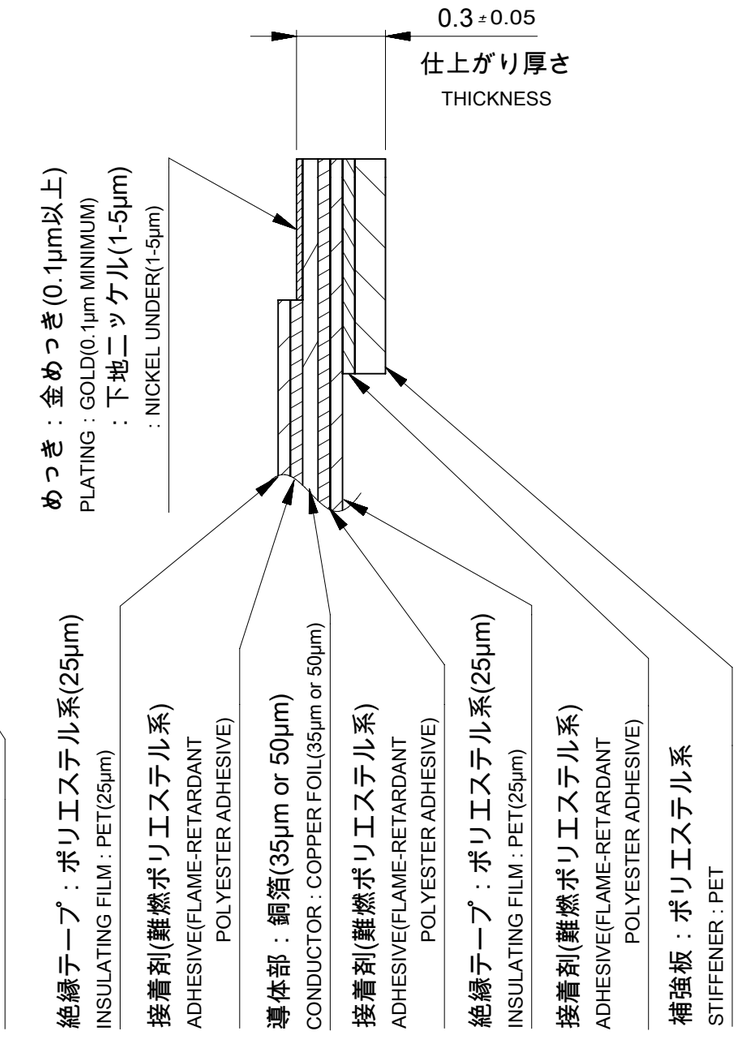

FFC構成推奨仕様
STRUCTURE OF FFC

THIS DRAWING CONTAINS INFORMATION THAT IS PROPRIETARY TO MOLEX ELECTRONIC TECHNOLOGIES, LLC AND SHOULD NOT BE USED WITHOUT WRITTEN PERMISSION

DIMENSION UNITS	SCALE
mm	10:1

GENERAL TOLERANCES (UNLESS SPECIFIED)		
ANGULAR TOL	±	1.0 °
4 PLACES	±	0.2
3 PLACES	±	0.2
2 PLACES	±	0.2
1 PLACE	±	0.2
0 PLACES	±	0.2

DRAFT WHERE APPLICABLE MUST REMAIN WITHIN DIMENSIONS

CURRENT REV DESC:

EC NO: 613264
DRWN: SKAWAKAMI 2019/03/06
CHK'D: TRSUZUKI 2019/03/06
APPR: RTAKEUCHI 2019/03/06

INITIAL REVISION:
DRWN: SKAWAKAMI 2019/01/30
APPR: RTAKEUCHI 2019/02/01

THIRD ANGLE PROJECTION | DRAWING: A3-SIZE | SERIES: 501951

molex

0.5 FPC CONN. HSG ASSY
EASY ON VERTICAL (LOW-HALOGEN)

PRODUCT CUSTOMER DRAWING

DOCUMENT NUMBER	DOC TYPE	DOC PART	REVISION
5019511008-SD	PSD	000	C

MATERIAL NUMBER	CUSTOMER	SHEET NUMBER
SEE CHART		3 OF 4

DOCUMENT STATUS	P1	RELEASE DATE	2019/03/06 09:44:57

FORMAT: master-lb-prod-A3
REVISION: H
DATE: 2018/01/18

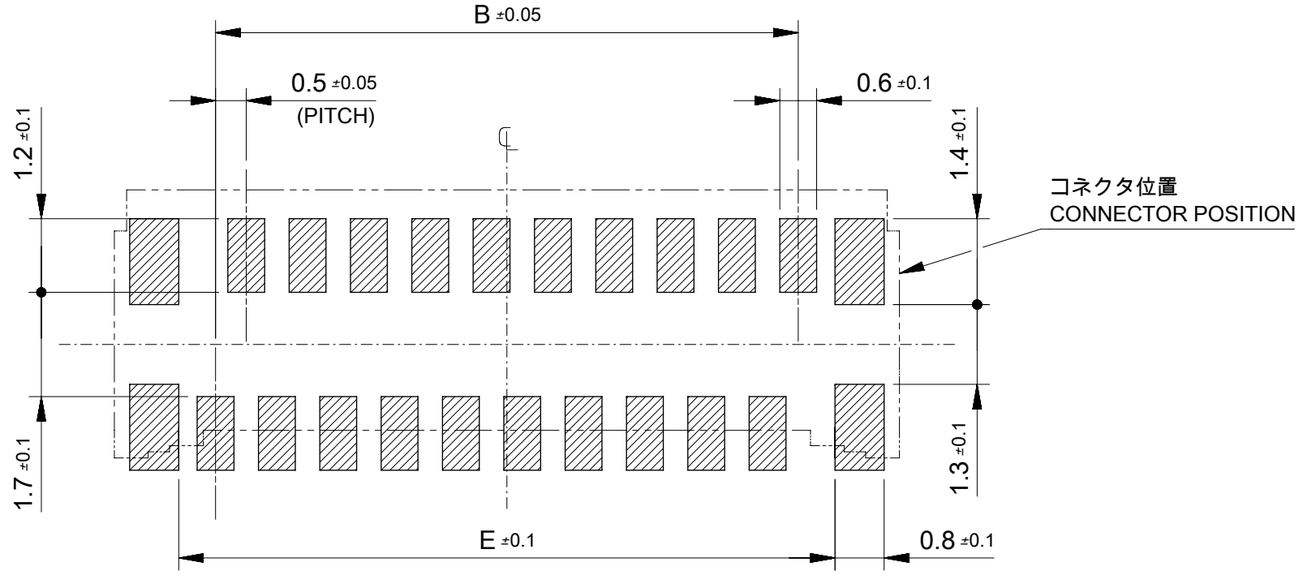

参考基板レイアウト
RECOMMENDED P.C.BOARD
PATTERN DIMENSION(REF.)
(マウント面)
(MOUNTING SIDE)

マスク厚　：100μm
マスク開口率：100%
SCREEN THICKNESS　：100μm
SCREEN OPEN RATIO　：100%

注記 NOTES:

1. 使用材料 MATERIAL
   ハウジング　：液晶ポリマー　ガラス充填, UL94V-0(白)
   HOUSING　LIQUID CRYSTAL POLYMER
   GLASS FILLED, UL94V-0 (WHITE)
   アクチュエータ　：ポリアミド, ガラス充填, UL94V-0(黒)
   ACTUATOR　POLYAMIDE, GLASS FILLED,
   UL94V-0 (BLACK)
   ターミナル　：銅合金(t=0.15)
   TERMINAL　COPPER ALLOY
   金具　：りん青銅(t=0.2)
   FITTING NAIL　PHOSPHOR BRONZE

2. めっき仕様 PLATING
   ターミナル TERMINAL
   コンタクト部：部分金めっき(0.1μm以上)
   テール部：部分金めっき
   下地：ニッケルめっき(1.0μm以上)
   CONTACT AREA：SEPARATED GOLD PLATING
   (0.1 MICROMETER MINIMUM)
   SOLDER TAIL AREA：SEPARATED GOLD PLATING
   UNDERPLATE：NICKEL OVERALL
   金具 FITTING NAIL
   ニッケル下地錫めっき
   錫めっき(1.0μm以上)
   ニッケルめっき(1.0μm以上)
   TIN(Sn) OVER NICKEL(Ni) PLATING.
   TIN PLATING (1.0 MICROMETER MINIMUM)
   NICKEL PLATING (1.0 MICROMETER MINIMUM)

3. テールと金具を併せた平坦度は 0.1ミリメートル以下(リフロー前)
   TAILS AND NAILS COPLANARITY
   TO BE 0.1 MAX. (BEFORE REFLOW)

△4 R0.3は、FPC導体部にかからないこと。
R0.3 MUST NOT BE OVERLAPPED TO PATTERN OF FPC.

FPC/FFCについて ABOUT FPC/FFC

打ち抜き方向は導体側から補強板側を推奨します。
導体部については軟箔銅35μmまたは50μmを推奨します。
FFCに規定された定格温度がFFC単体前提である場合が御座います。
コネクタと組み合わせての実使用において、接着層が劣化するなどの信頼性を満足できないケースを回避するため、
実機での評価/確認をお願い致します。
RECOMMENDED PUNCHING DIRECTION: FROM CONDUCTOR SIDE TO STIFFENER SIDE
RECOMMENDED CONDUCTOR SPEC: SOFT COPPER FOIL
RECOMMENDED CONDUCTOR THICKNESS: 35 MICROMETER OR 50 MICROMETER
NOTE: WHEN ACTUALLY USING IT WITH CONNECTOR, PLEASE DO THE EVALUATION AND THE
CONFIRMATION WITH AN ACTUAL EQUIPMENT TO EVADE THE CASE WHERE RELIABILITY
CANNOT BE FILLED (THE ADHESIVE LINE OF FFC IS DETERIORATED ETC,)

FPCについて　ABOUT FPC

補強フィルム材質はポリイミドを推奨します。ベースフィルムは25μmを推奨します。
接着剤は熱硬化接着剤を推奨します。
尚、接着剤の接点部への付着は導通不良の原因になりますので、染み出しが無い様お願い致します。
RECOMMENDED MATERIAL/THICKNESS.
RECOMMENDED STIFFENER MATERIAL: POLYIMIDE
RECOMMENDED BASE FILM THICKNESS: 25 MICROMETER
RECOMMENDED ADHESIVE: THERMOSETTING ADHESIVE
NOTE: PLEASE PUT APPROPRIATE AMOUNT OF ADHESIVE ON ADHEREND BECAUSE THERE IS A
POSSIBILITY THAT THE EXTRA ADHESIVE CAUSES THE DEFECT IN ELECTRICAL CONTINUITY.
THERE IS A POSSIBILITY THAT THE PRESCRIPT TEMPERATURE OF FFC IS SET TO SINGLE IT.

THIS DRAWING CONTAINS INFORMATION THAT IS PROPRIETARY TO MOLEX ELECTRONIC TECHNOLOGIES, LLC AND SHOULD NOT BE USED WITHOUT WRITTEN PERMISSION

DIMENSION UNITS	SCALE
mm	1:1

GENERAL TOLERANCES (UNLESS SPECIFIED)		
ANGULAR TOL	±	1.0 °
4 PLACES	±	0.2
3 PLACES	±	0.2
2 PLACES	±	0.2
1 PLACE	±	0.2
0 PLACES	±	0.2

DRAFT WHERE APPLICABLE MUST REMAIN WITHIN DIMENSIONS

CURRENT REV DESC:

EC NO: 613264
DRWN: SKAWAKAMI 2019/03/06
CHK'D: TRSUZUKI 2019/03/06
APPR: RTAKEUCHI 2019/03/06

INITIAL REVISION:
DRWN: SKAWAKAMI 2019/01/30
APPR: RTAKEUCHI 2019/02/01

THIRD ANGLE PROJECTION

DRAWING	SERIES
A3-SIZE	501951

molex

0.5 FPC CONN. HSG ASSY
EASY ON VERTICAL (LOW-HALOGEN)

PRODUCT CUSTOMER DRAWING

DOCUMENT NUMBER	DOC TYPE	DOC PART	REVISION
5019511008-SD	PSD	000	C

MATERIAL NUMBER	CUSTOMER	SHEET NUMBER
SEE CHART		4 OF 4

DOCUMENT STATUS	P1	RELEASE DATE	2019/03/06 09:44:57

FORMAT: master-tb-prod-A3
REVISION: H
DATE: 2018/01/18