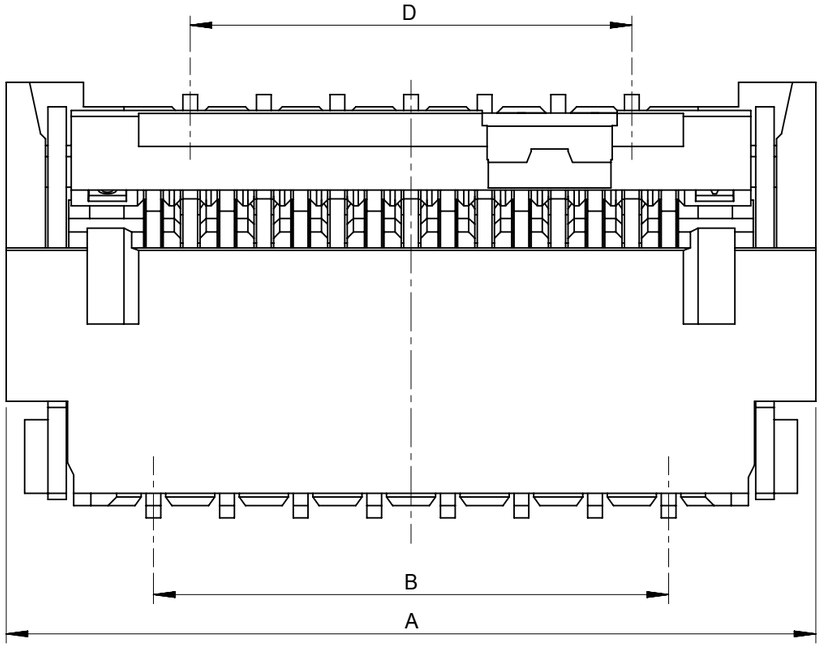

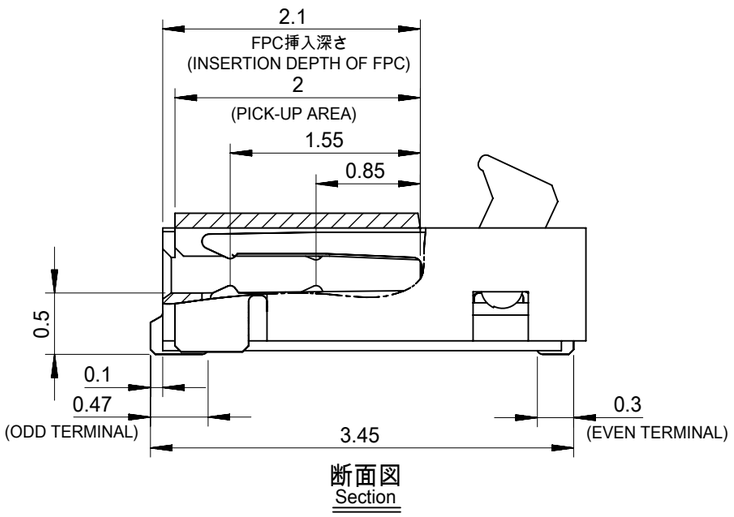

断面図
Section

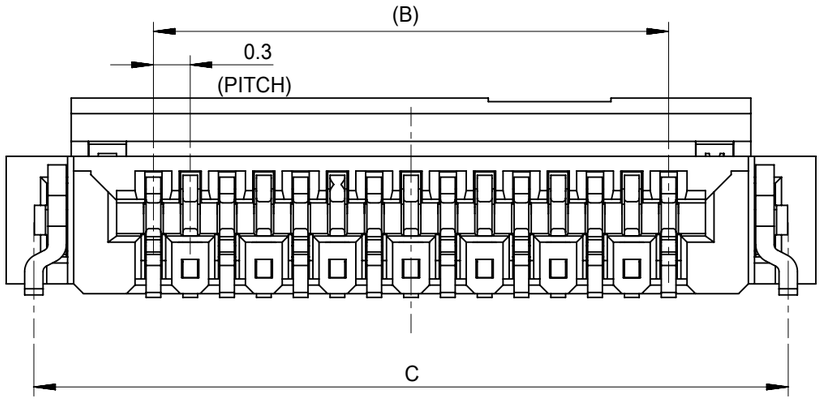

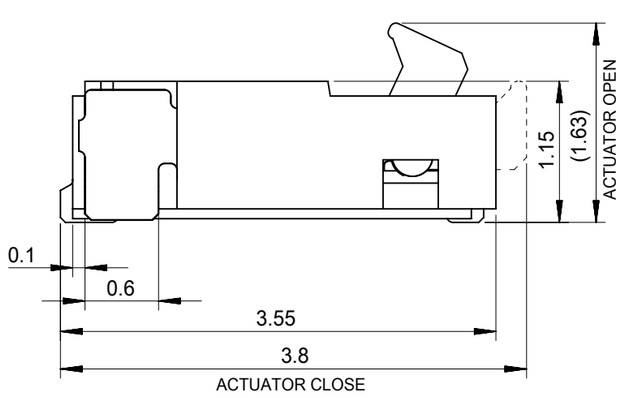

注記 NOTES:
1.材質 MATERIAL
ハウジング：LCP(液晶ポリマー)、白色、ガラス充填、UL94V-0
HOUSING:LIQUID CRYSTAL POLYMER,WHITE(NATURAL)
GLASS FILLED,UL94V-0
アクチュエータ：ポリアミド樹脂
黒色、ガラス充填、UL94HB
ACTUATOR: POLYAMIDE
BLACK GLASS FILLED,UL94HB
ターミナル：燐青銅 (t = 0.12)
TERMINAL:PHOSPHOR BRONZE(t=0.12)
金具：燐青銅(t=0.15)
NAIL:PHOSPHOR BRONZE(t=0.15)
2.めっき仕様 PLATING
ターミナル TERMINAL
接点部：金めっき　0.1μm以上
CONTACT AREA: GOLD 0.1 MICROMETER MINIMUM
半田付け部：金めっき
SOLDER TAIL AREA: GOLD
下地めっき:ニッケル　1.0μm以上
UNDER PLATING:NICKEL 1.0 MICROMETER MINIMUM
金具 NAIL
錫めっき　1.0μm以上
TIN PLATING 1.0 MICROMETER MINIMUM
下地めっき:ニッケル　1.0μm以上
UNDER PLATING:NICKEL 1.0 MICROMETER MINIMUM
3.平坦度は、0.1ミリ以下とする。
TAILS COPLANARITY TO BE 0.1 MAXIMUM.
4.ELV及びRoHS適合品
ELV AND RoHS COMPLIANT
5.本製品は502598-**91の端子材料変更品である。
THIS PRODUCT IS CHANGE OF TERMINAL MATERIAL
FOR 502598-**91.

D	C	B	A	EMBOSSED PACKAGE オーダー番号 ORDER NO.	極　数 CIRCUITS
14.4	16.95	15	17.4	502598-5193	51
12.6	15.15	13.2	15.6	502598-4593	45
11.4	13.95	12.0	14.4	502598-4193	41
10.8	13.35	11.4	13.8	502598-3993	39
9	11.55	9.6	12	502598-3393	33
7.8	10.35	8.4	10.8	502598-2993	29
7.2	9.75	7.8	10.2	502598-2793	27
6.6	9.15	7.2	9.6	502598-2593	25
6	8.55	6.6	9	502598-2393	23
4.2	6.75	4.8	7.2	502598-1793	17
3.6	6.15	4.2	6.6	502598-1593	15

CONNECTOR SERIES NO. 502598-**21

GENERAL TOLERANCES:
(UNLESS SPECIFIED)
一般公差

10 UNDER 未満		±0.2
10 OVER 以上	30 UNDER 未満	±0.25
30 OVER 以上		±0.3
ANGLE 角度		±1°

THIS DRAWING CONTAINS INFORMATION THAT IS PROPRIETARY TO MOLEX ELECTRONIC TECHNOLOGIES, LLC AND SHOULD NOT BE USED WITHOUT WRITTEN PERMISSION

DIMENSION UNITS: mm
SCALE: NTS
GENERAL TOLERANCES (UNLESS SPECIFIED)
ANGULAR TOL ± °
4 PLACES ±
3 PLACES ±
2 PLACES ±
1 PLACE ±
0 PLACES ±
DRAFT WHERE APPLICABLE MUST REMAIN WITHIN DIMENSIONS

CURRENT REV DESC:
EC NO: 704374
DRWN: KYHWANG 2022/04/25
CHK'D: SMARUYAMA 2022/05/09
APPR: YNAITO 2022/05/09
INITIAL REVISION:
DRWN: KMIYAHARA 2012/07/18
APPR: KMORIKAWA 2012/08/01

THIRD ANGLE PROJECTION
DRAWING: A3-SIZE
SERIES: 502598

molex

0.3 FPC CONN. BACK FLIP
HOUSING ASSY

PRODUCT CUSTOMER DRAWING

DOCUMENT NUMBER	DOC TYPE	DOC PART	REVISION
SD-502598-003	PSD	001	C

MATERIAL NUMBER	CUSTOMER	SHEET NUMBER
SEE TABLE	GENERAL MARKET	1 OF 2

DOCUMENT STATUS	P1	RELEASE DATE	2022/05/09 09:31:46

FORMAT: master-tb-prod-A3
REVISION: J1
DATE: 2021/05/01

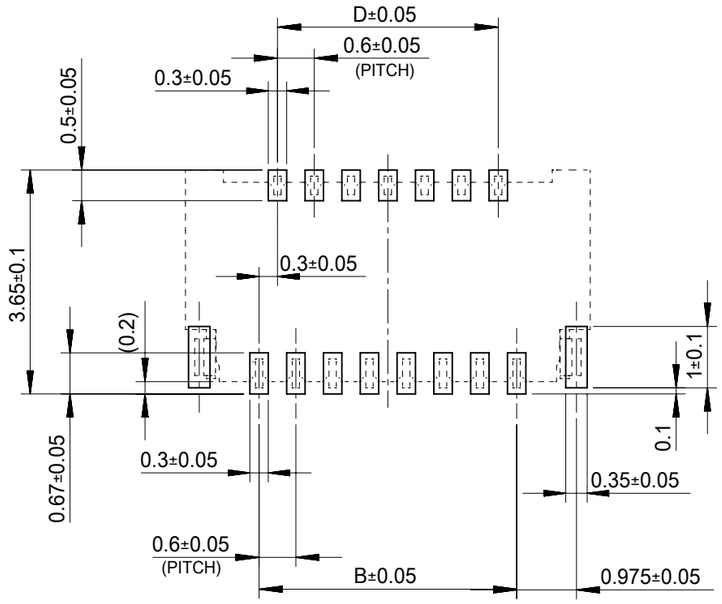

推奨基板寸法

RECOMMENDED P.W.B. PATTERN LAYOUT

マスク厚：100μm
マスク開口率：100%
SCREEN THICKNESS：100μm
SCREEN OPEN RATIO：100%

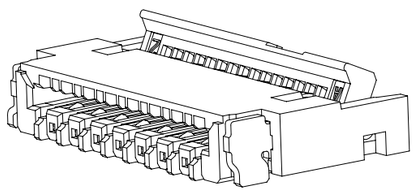

ISO VIEW（参考）

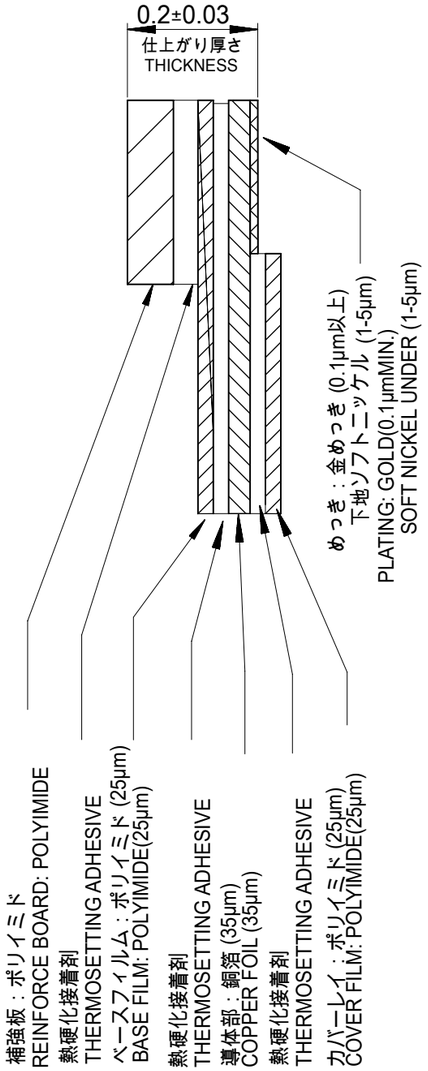

FPC構成推奨仕様

STRUCTURE OF FPC

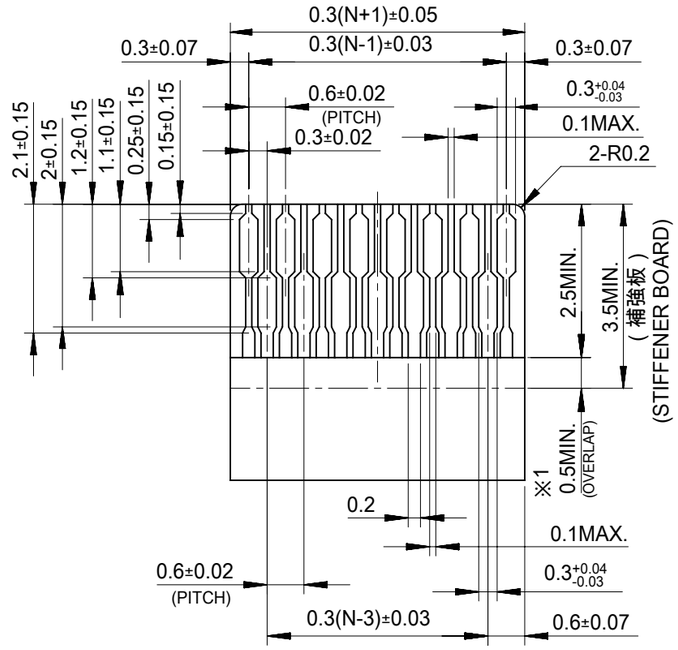

N：極数
N:CIRCUITS

適合する金めっきFPC推奨寸法

APPLICABLE FPC OF GOLD PATING
RECOMMENDED DIMENSION

(仕上がり厚さ：0.2±0.03)
(THICKNESS:0.2±0.03)

FPCについて：
抜き方向は、導体側から補強板側を推奨致します。
補強フィルム材質は、ポリイミドを推奨致します。
接着剤は熱硬化接着剤を推奨致します。
尚、接着剤の接点部への付着は導通不良の原因になりますので、
染み出しが無い様、お願い致します。

ABOUT FPC:
RECOMMENDED PUNCHER DIRECTION:
FROM CONDUCTOR SIDE TO STIFFNER FILM SIDE.
RECOMMENDED MATERIAL:
STIFFENER FILM : POLYIMIDE
BONDING AGENT : THERMOSETTING AGENT
PLEASE PUT APPROPRIATE AMOUNT OF ADHESIVE ON ADHEREND BECAUSE THERE IS A POSSIBILITY THAT THE EXTRA ADHESIVE CAUSES THE DEFECT IN ELECTRICAL CONTINUITY.

GENERAL TOLERANCES: (UNLESS SPECIFIED) 一般公差	
10 UNDER 未満	±0.2
10 OVER 以上 30 UNDER 未満	±0.25
30 OVER 以上	±0.3
ANGLE 角度	±1°

THIS DRAWING CONTAINS INFORMATION THAT IS PROPRIETARY TO MOLEX ELECTRONIC TECHNOLOGIES, LLC AND SHOULD NOT BE USED WITHOUT WRITTEN PERMISSION

DIMENSION UNITS	SCALE
mm	NTS

GENERAL TOLERANCES (UNLESS SPECIFIED)

ANGULAR TOL	± °
4 PLACES	±
3 PLACES	±
2 PLACES	±
1 PLACE	±
0 PLACES	±

DRAFT WHERE APPLICABLE MUST REMAIN WITHIN DIMENSIONS

CURRENT REV DESC:

EC NO: 704374
DRWN: KYHWANG 2022/04/25
CHK'D: SMARUYAMA 2022/05/09
APPR: YNAITO 2022/05/09

INITIAL REVISION:
DRWN: KMIYAHARA 2012/07/18
APPR: KMORIKAWA 2012/08/01

THIRD ANGLE PROJECTION | DRAWING: A3-SIZE | SERIES: 502598

molex

0.3 FPC CONN. BACK FLIP HOUSING ASSY

PRODUCT CUSTOMER DRAWING

DOCUMENT NUMBER	DOC TYPE	DOC PART	REVISION
SD-502598-003	PSD	001	C

MATERIAL NUMBER	CUSTOMER	SHEET NUMBER
SEE SHEET 1	GENERAL MARKET	2 OF 2

DOCUMENT STATUS	P1	RELEASE DATE	2022/05/09 09:31:46

FORMAT: master-tb-prod-A3
REVISION: J1
DATE: 2021/05/01

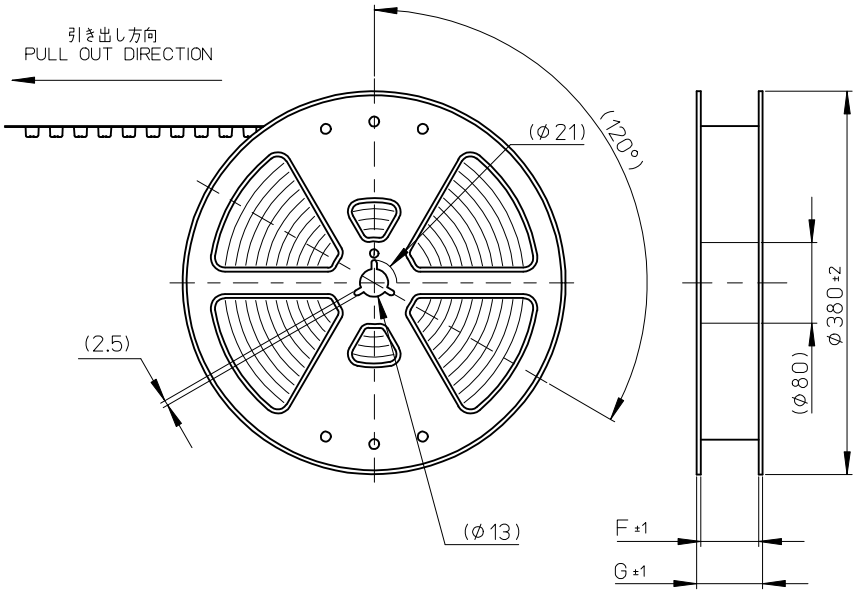

注記）
NOTES

1.製品番号502598-**21の詳細寸法は、製品単体図面を参照下さい。
IN THE PACAKGE PART NUMBER 502598-**21 DETAIL DIMENSIONS, SEE SALES DRAWING FOR CONNECTOR.

2.梱包数量：3000個/リール
NUMBER OF CONNECTORS : 3000 PCS/REEL

3.リードテープ長さ
LEAD TAPE LENGTH

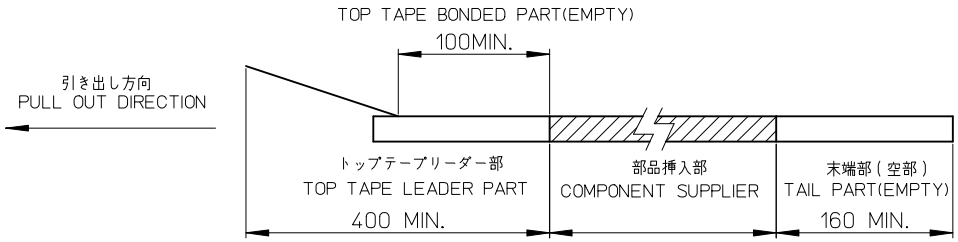

4.カバーテープの剥離強度については、IEC60286-3に準拠
COVER TAPE PEEL FORCE IS DEFINED BY IEC 60286-3.

5.材料
MATERIAL
キャリアテープ：ポリスチレン（PS）
CARRIER TAPE:POLYSTYRENE(PS)
トップテープ：ポリエチレンテレフタラート（PET）、他
TOP TAPE :POLYETHYLENE TELEPHTHALATE(PET), OTHERS
リール：ポリスチレン(PS)
REEL:POLYSTYLENE(PS)

6.ELV及びRoHS適合品
ELV AND RoHS COMPLIANT

7.本製品は502598-**91の端子材料変更品である。
THIS PRODUCT IS CHANGE OF TERMINAL MATERIAL FOR 502598-**91.

REVISED				REV
EC NO: J2014-0146				
DRWN:KNAGUMO	2013/07/25			
CH'KD:KTAKAHASHI	2013/08/30			
APPR:YNOGAWA	2013/08/28			
				B

GENERAL TOLERANCES (UNLESS SPECIFIED)	
10 UNDER	±---
10 OVER 30 UNDER	±---
30 OVER	±---
ANGULAR ±1 °	

DRAFT WHERE APPLICABLE MUST REMAIN WITHIN DIMENSIONS

DIMENSION STYLE	SCALE	DESIGN UNITS	
MM ONLY	---	METRIC	THIRD ANGLE PROJECTION

	DRAWN BY	DATE
	KMIYAHARA	2012/07/18
	CHECKED BY	DATE
	KTAKAHASHI	2012/07/18
	APPROVED BY	DATE
	KMORIKAWA	2012/08/01

TITLE: 0.3 FPC CONN. BACK FLIP TAPING PACKAGE (502598-**21 SERIES)

molex

MATERIAL NO.	DOCUMENT NO.	SHEET NO.
SEE TABLE	SD-502598-004	1 OF 2

SIZE A3

THIS DRAWING CONTAINS INFORMATION THAT IS PROPRIETARY TO MOLEX INCORPORATED AND SHOULD NOT BE USED WITHOUT WRITTEN PERMISSION

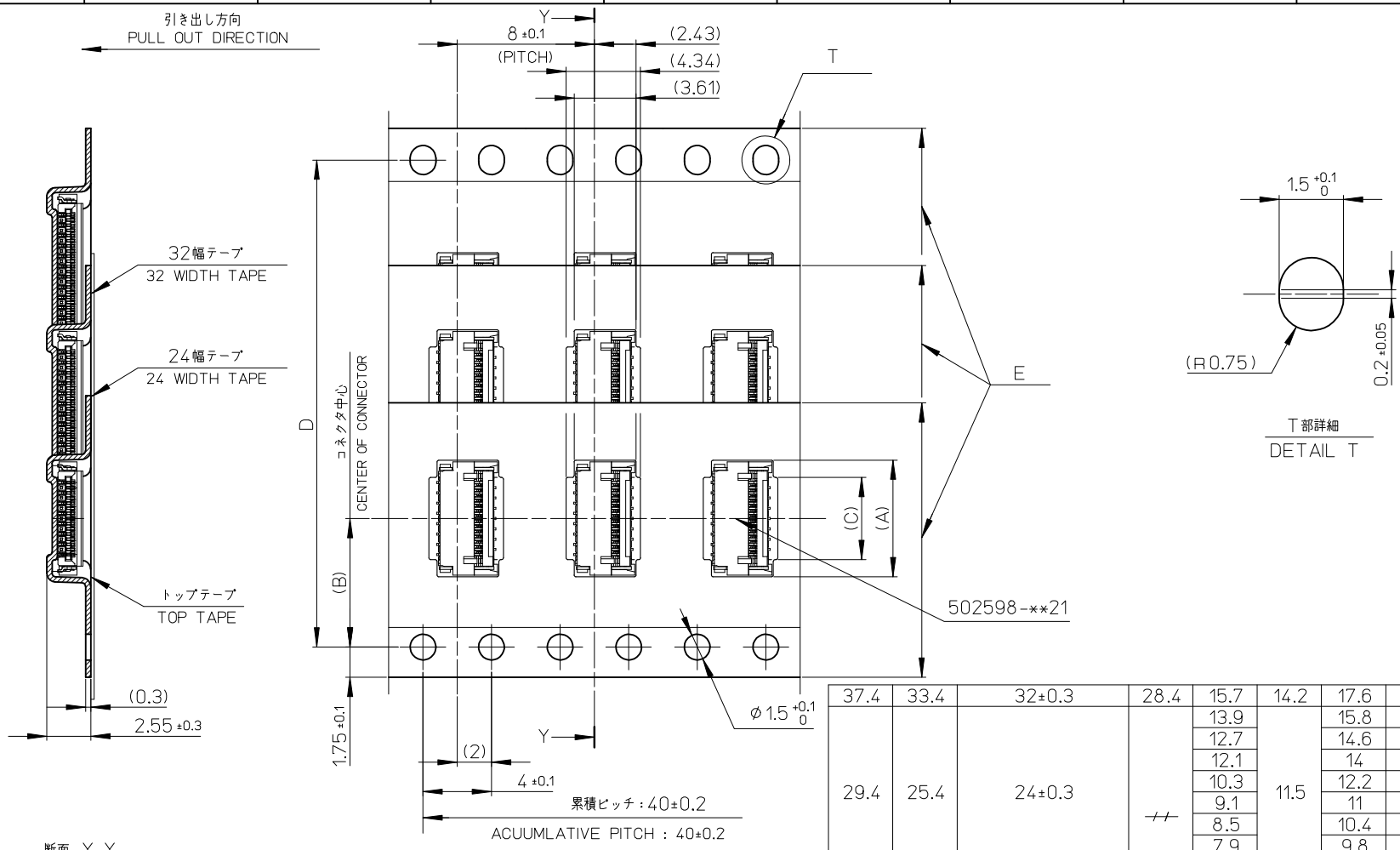

G	F	E キャリアテープ幅 EMBOSSED TAPE WIDTH	D	C	B	A	製品番号 MATERIAL NO.	極数 CIRCUITS
37.4	33.4	32±0.3	28.4	15.7	14.2	17.6	502598-5193	51
29.4	25.4	24±0.3	〃	13.9	11.5	15.8	502598-4593	45
				12.7		14.6	502598-4193	41
				12.1		14	502598-3993	39
				10.3		12.2	502598-3393	33
				9.1		11	502598-2993	29
				8.5		10.4	502598-2793	27
				7.9		9.8	502598-2593	25
				7.3		9.2	502598-2393	23
21.4	17.4	16±0.3		5.5	7.5	7.4	502598-1793	17
				4.9		6.8	502598-1593	15

REVISED
EC NO: J2014-0146 2013/07/25
DRWN:KNAGUMO 2013/08/30
CH'KD:KTAKAHASHI 2013/08/28
APPR:YNOGAWA
DESCRIPTION
B
REV

GENERAL TOLERANCES (UNLESS SPECIFIED)

10 UNDER	± ---
10 OVER 30 UNDER	± ---
30 OVER	± ---
ANGULAR ±1 °	

DRAFT WHERE APPLICABLE MUST REMAIN WITHIN DIMENSIONS

DIMENSION STYLE: MM ONLY
SCALE: ---
DESIGN UNITS: METRIC
THIRD ANGLE PROJECTION

DRAWN BY: KMIYAHARA DATE: 2012/07/18
CHECKED BY: KTAKAHASHI DATE: 2012/07/18
APPROVED BY: KMORIKAWA DATE: 2012/08/01
MATERIAL NO.: SEE TABLE

TITLE: 0.3 FPC CONN. BACK FLIP TAPING PACKAGE (502598-**21 SERIES)

molex

DOCUMENT NO.: SD-502598-004
SHEET NO.: 2 OF 2
SIZE: A3

THIS DRAWING CONTAINS INFORMATION THAT IS PROPRIETARY TO MOLEX INCORPORATED AND SHOULD NOT BE USED WITHOUT WRITTEN PERMISSION