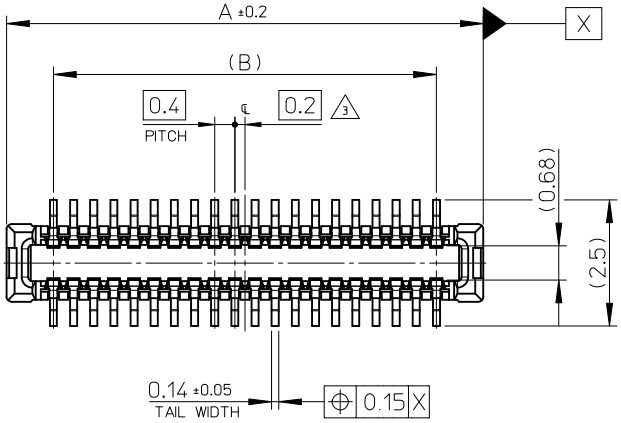

注記　NOTES

1. 使用材料 MATERIAL
   ハウジング：液晶ポリマー（ LCP ）　ガラス充填　UL94V-0（黒）
   HOUSING:LIQUID CRYSTAL POLYMER(GLASS FILLED) UL94V-0 (COLOR:BLACK)
   ターミナル：りん青銅　(t=0.1)
   TERMINAL : PHOSPHOR BRONZE (t=0.1)
2. メッキ仕様　PLATING
   ターミナル　TERMINAL
   金メッキ　0.1 マイクロメートル以上（コンタクト部）
   GOLD 0.1MICROMETER MINIMUM (CONTACT AREA)
   金メッキ 0.05 マイクロメートル以上（テール部）
   GOLD 0.05MICROMETER MINIMUM (TAIL AREA)
   下地メッキ：ニッケルメッキ　1.0 マイクロメートル以上
   UNDER PLATING : NICKEL 1.0MICROMETER MINIMUM
   ※コンタクト部とテール部はニッケルメッキによって分断されている金メッキです．
   DIVIDE INTO PARTS THE GOLD PLATING OF THE CONTACT AND THE TAIL PART BY THE NICKEL PLATING.
   ※封孔処理品
   SEALING　TREATMENT

3 （全極数／2）＝偶数の場合に適用．
APPLY FOR (CIRCUIT/2)=EVEN.

4. 嵌合相手：　503105 シリーズ
   MATE WITH : 503105 SERIES.
5. テール平坦度は、 0.1 以下
   TAIL COPLANARITY TO BE 0.1MAXIMUM.
6. ELV 及び RoHS適合品
   ELV AND RoHS COMPLIANT.

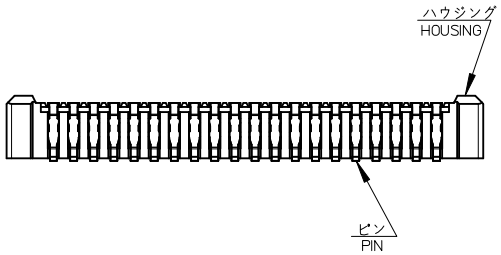

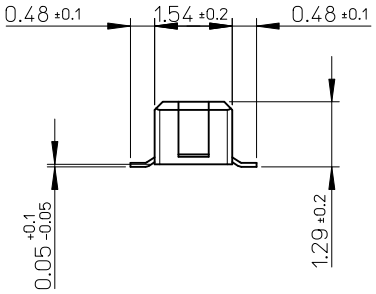

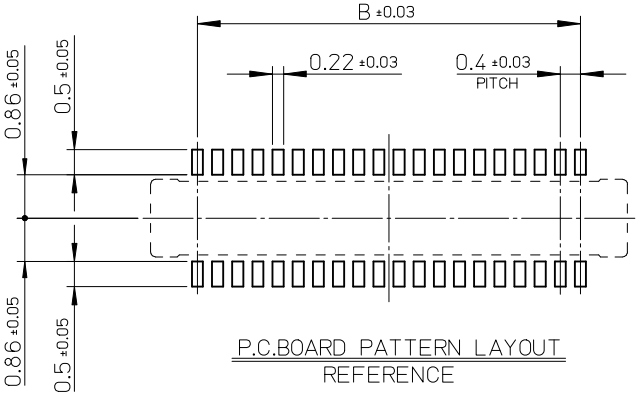

P.C.BOARD PATTERN LAYOUT
REFERENCE

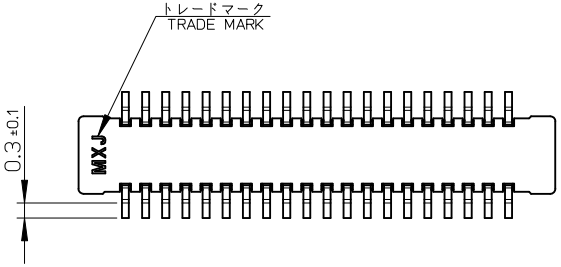

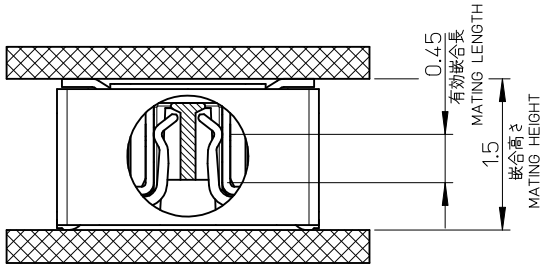

嵌合断面図（参考）
MATED DRAWING (REFERENCE)

9.6	11.46	503108-5010	50
8.4	10.26	503108-4410	44
7.6	9.46	503108-4010	40
5.6	7.46	503108-3010	30
B	A	EMBOSSED TAPE ORDER No. オーダー番号	CKT.
		CONNECTOR SERIES No. : 503108-**19	

REVISED
EC NO: J2011-0740　2010/11/29
DRWN:KTOYODA　2010/11/29
CH'KD:MSASAO　2011/02/21
APPR:MSASAO　2011/02/21
DESCRIPTION
REV

GENERAL TOLERANCES (UNLESS SPECIFIED)

10 UNDER	± ---
10 OVER 30 UNDER	± ---
30 OVER	± ---
ANGULAR	±--- °

DRAFT WHERE APPLICABLE MUST REMAIN WITHIN DIMENSIONS

DIMENSION STYLE	MM ONLY
SCALE	10:1
DESIGN UNITS	METRIC
	THIRD ANGLE PROJECTION
DRAWN BY / DATE	RTAKEUCHI 2008/07/02
CHECKED BY / DATE	MSASAO 2008/07/02
APPROVED BY / DATE	MSASAO 2008/07/02
MATERIAL NO.	SEE CHART
TITLE	0.4 B-TO-B CONN. HGT=1.5 W/O NAIL W=2.6 PLUG ASSY
	MOLEX INCORPORATED
DOCUMENT NO.	SD-503108-001
SHEET NO.	1 OF 1
SIZE	A3

THIS DRAWING CONTAINS INFORMATION THAT IS PROPRIETARY TO MOLEX INCORPORATED AND SHOULD NOT BE USED WITHOUT WRITTEN PERMISSION

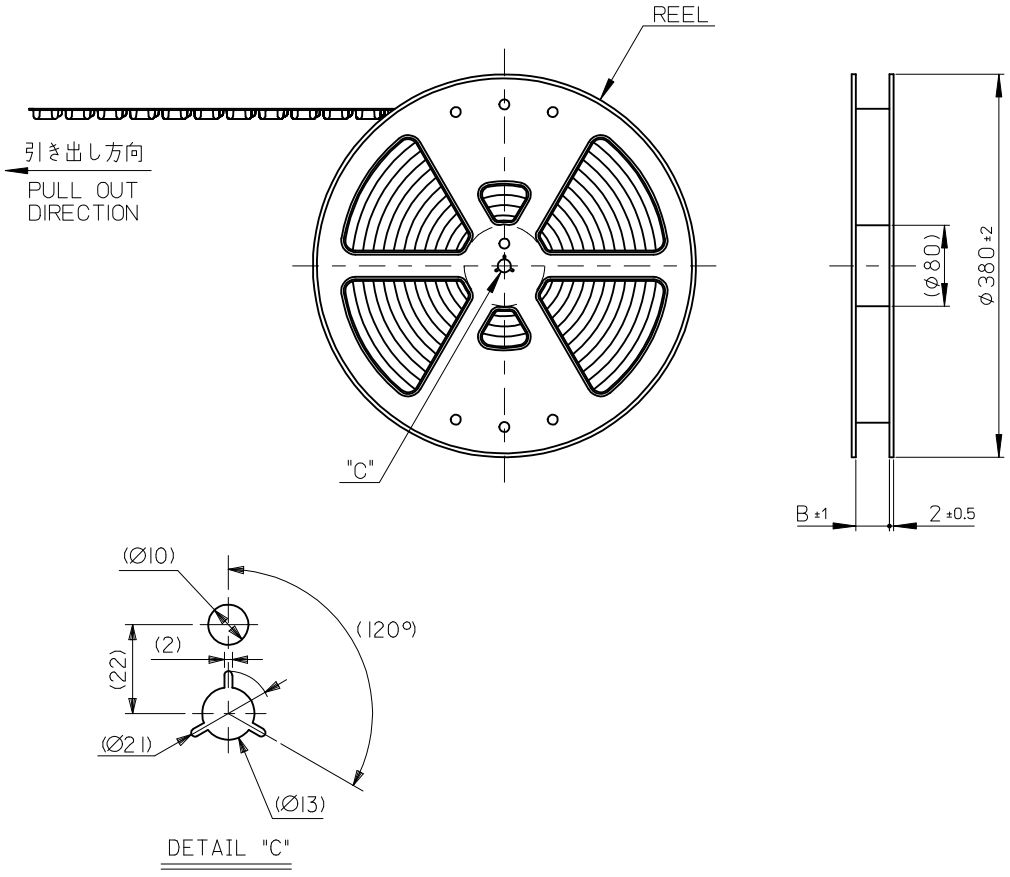

DETAIL "C"

注記 NOTES

1. 製品詳細寸法については製品単体図面を参照下さい。
   FOR DETAIL OF CONNECTOR DIMENSIONS,
   PLEASE SEE THE DRAWING OF CONNECTOR ITSELF (NOT PACKAGED).
2. 梱包数量：3000 個／リール
   NUMBER OF CONNECTORS : 3000PCS/REEL
3. リードテープ長さ LEAD TAPE LENGTH

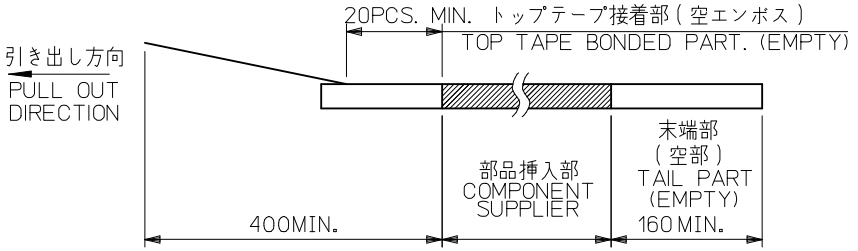

4. トップテープの剥離強度：0.1N~1.3N(10gf~130gf)
   （剥離方向は下図参照）
   尚、本規格値は出荷時に適用。（但し、輸送時に剥離が発生しないこと。）
   PEELING OFF FORCE OF TOP TAPE : 0.1N~1.3N(10gf~130gf)
   (PEELING DIRECTION AS SHOWN IN FOLLOWING FIG.)
   THIS REQUIREMENT SHOULD BE APPLIED AT SHIPMENT.
   PEEL OFF SHOULD NOT BE ALLOWED , DURING TRANSPORTION.

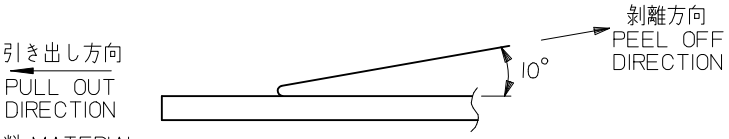

5. 材料 MATERIAL
   キャリアテープ（CARRIER TAPE）：ポリスチレン （POLYSTYRENE）
   トップテープ（TOP TAPE）：PET , PE , PEF
   リール（REEL）：ポリスチレン（PS）＜リサイクル材を含む＞
   POLYSTYRENE (PS) <RECYCLE MATERIAL CONTAINED>
6. ELV及びRoHS適合品
   ELV AND RoHS COMPLIANT

MODEL NO.	503108-**10		
DIMENSION STYLE: MM ONLY	SCALE: ---	DESIGN UNITS: METRIC	THIRD ANGLE PROJECTION
DRAWN BY: RTAKEUCHI	DATE: 2008/08/20	TITLE: 0.4 B-TO-B CONN. HGT=1.5 PLUG ASSY EMBSTP PKG	
CHECKED BY: THIRATA	DATE: 2008/08/20		
APPROVED BY: MSASAO	DATE: 2008/08/20	molex	
MATERIAL NO.: SEE CHART		DOCUMENT NO.: SD-503108-002	SHEET NO.: 1 OF 3
SIZE: A3	THIS DRAWING CONTAINS INFORMATION THAT IS PROPRIETARY TO MOLEX INCORPORATED AND SHOULD NOT BE USED WITHOUT WRITTEN PERMISSION		

GENERAL TOLERANCES (UNLESS SPECIFIED)
10 UNDER ±---
10 OVER 30 UNDER ±---
30 OVER ±---
ANGULAR ±--- °
DRAFT WHERE APPLICABLE MUST REMAIN WITHIN DIMENSIONS

REV	DESCRIPTION		
D	REVISED EC NO: J2013-1009	DRWN:KTOYODA	2013/03/13
		CH'KD:TASAKAWA	2013/03/13
		APPR:MSASAO	2013/03/13

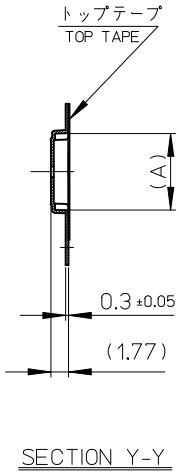

SECTION Y-Y

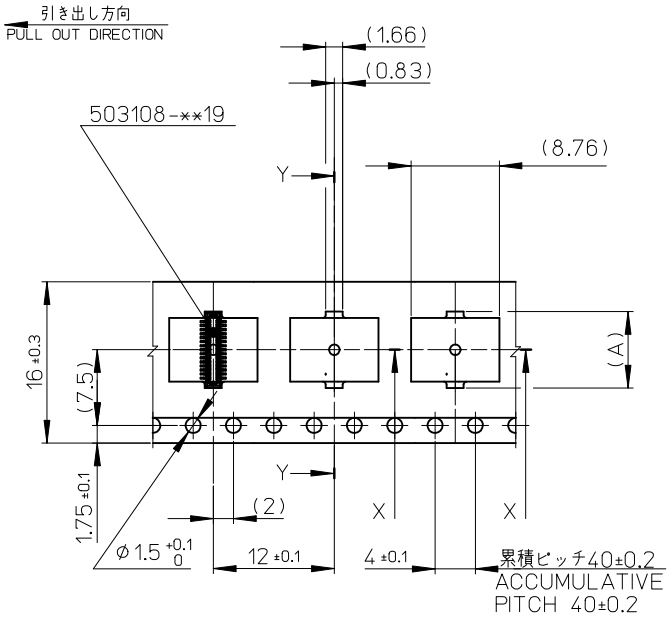

16mm 幅キャリアテープ
16mm WIDTH CARRIER TAPE

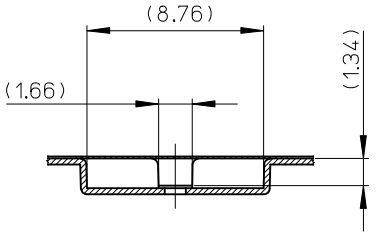

SECTION X-X

16	17.4	7.58	503108-3010	30
キャリアテープ幅 CARRIER TAPE WIDTH	B	(A)	MATERIAL No.	CKT.
			MODEL No.	503108-**10

SEE SHEET 1 OF 3
EC NO: J2013-1009 2013/03/13
DRWN:KTOYODA 2013/03/13
CH'KD:TASAKAWA 2013/03/13
APPR:MSASAO 2013/03/13
DESCRIPTION
REV D

GENERAL TOLERANCES (UNLESS SPECIFIED)

10 UNDER	± ---
10 OVER 30 UNDER	± ---
30 OVER	± ---
ANGULAR	± --- °

DRAFT WHERE APPLICABLE MUST REMAIN WITHIN DIMENSIONS

DIMENSION STYLE: MM ONLY
SCALE: ---
DESIGN UNITS: METRIC
THIRD ANGLE PROJECTION

DRAWN BY: RTAKEUCHI DATE: 2008/08/20
CHECKED BY: THIRATA DATE: 2008/08/20
APPROVED BY: MSASAO DATE: 2008/08/20

TITLE: 0.4 B-TO-B CONN. HGT=1.5 PLUG ASSY EMBSTP PKG

molex

MATERIAL NO.: SEE CHART
DOCUMENT NO.: SD-503108-002
SHEET NO.: 2 OF 3
SIZE: A3

THIS DRAWING CONTAINS INFORMATION THAT IS PROPRIETARY TO MOLEX INCORPORATED AND SHOULD NOT BE USED WITHOUT WRITTEN PERMISSION

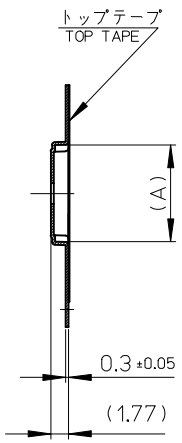

SECTION Y-Y

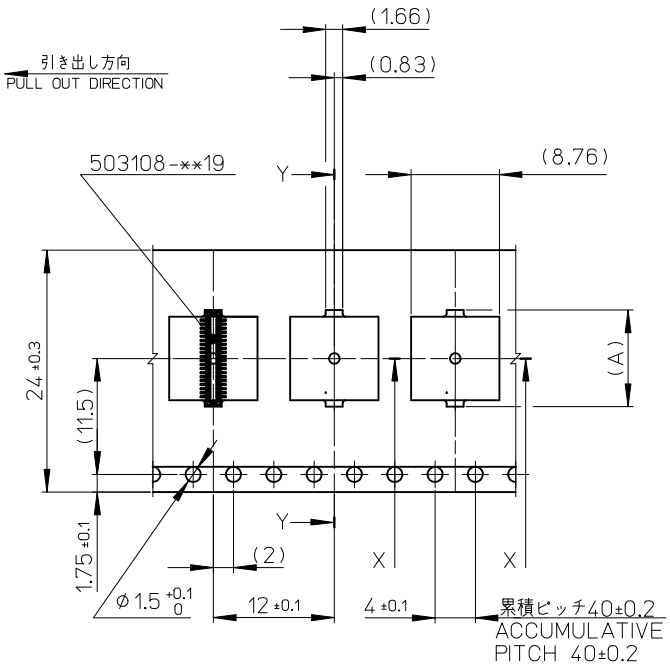

24mm 幅キャリアテープ
24mm WIDTH CARRIER TAPE

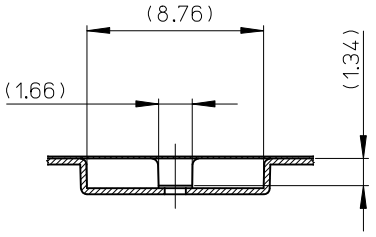

SECTION X-X

24	25.5	11.58	503108-5010	50
		10.38	503108-4410	44
		9.58	503108-4010	40
キャリアテープ幅 CARRIER TAPE WIDTH	B	(A)	MATERIAL No.	CKT.
			MODEL No. 503108-**10	

REVISED
EC NO: J2013-1009 2013/03/13
DRWN:KTOYODA 2013/03/13
CH'KD:TASAKAWA 2013/03/13
APPR:MSASAO 2013/03/13
DESCRIPTION
REV
D

GENERAL TOLERANCES (UNLESS SPECIFIED)

10 UNDER	± ---
10 OVER 30 UNDER	± ---
30 OVER	± ---
ANGULAR	± --- °

DRAFT WHERE APPLICABLE MUST REMAIN WITHIN DIMENSIONS

DIMENSION STYLE: MM ONLY
SCALE: ---
DESIGN UNITS: METRIC
THIRD ANGLE PROJECTION

DRAWN BY: RTAKEUCHI DATE: 2008/08/20
CHECKED BY: THIRATA DATE: 2008/08/20
APPROVED BY: MSASAO DATE: 2013/03/13

TITLE: 0.4 B-TO-B CONN. HGT=1.5 PLUG ASSY EMBSTP PKG

molex

MATERIAL NO.: SEE CHART
DOCUMENT NO.: SD-503108-002
SHEET NO.: 3 OF 3
SIZE: A3

THIS DRAWING CONTAINS INFORMATION THAT IS PROPRIETARY TO MOLEX INCORPORATED AND SHOULD NOT BE USED WITHOUT WRITTEN PERMISSION