FIGURE OF 5046930200

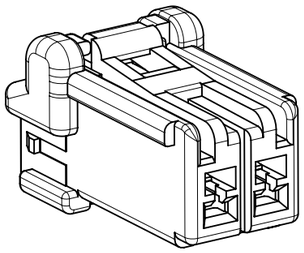

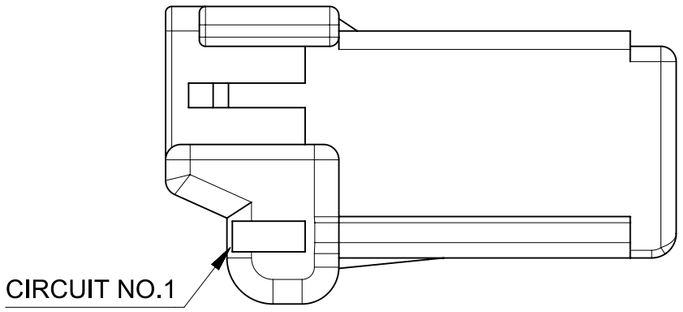

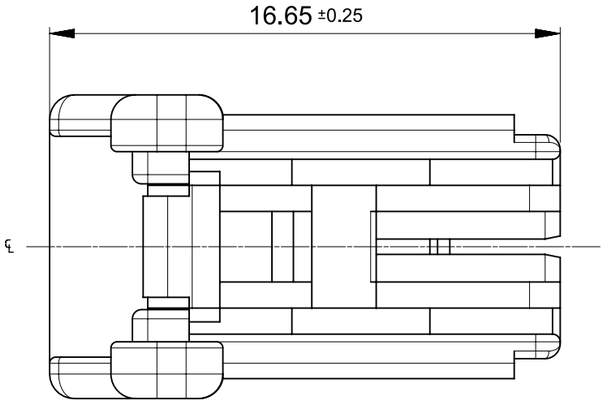

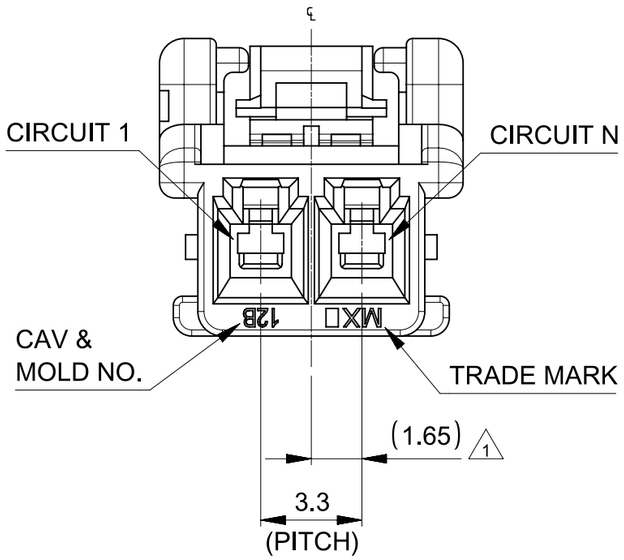

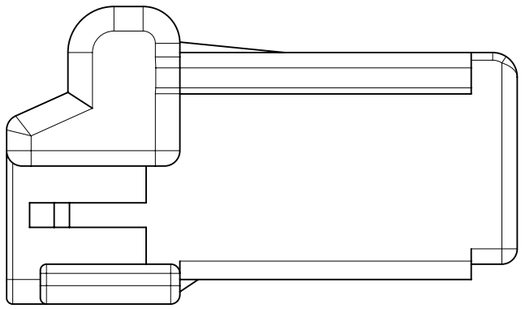

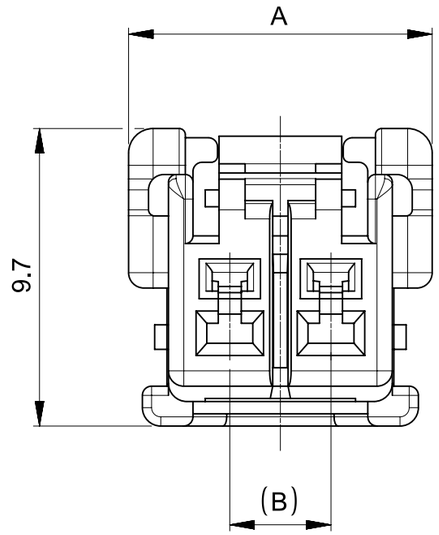

NOTES

1. 材料：TABLE 1 参照
   MATERIAL：SEE TABLE 1
2. 製品仕様書、アプリケーション仕様書、適応嵌合相手、適応リテーナー、適応ターミナルはSHEET 2を御参照下さい
   PLEASE REFER TO SHEET 2 FOR PRODUCT SPECIFICATION, APPLICATION SPECIFICATION, APPLY MATE PARTNER, APPLY RETAINER, APPLY TERMINAL.
3. 極数/2 = 偶数に適応
   APPLY FOR CIRCUIT SIZE / 2 =EVEN
4. 本製品のプラスチック部に黒点・白点等が確認される場合や色合いが異なる場合がありますが、製品性能に影響はありません。
   THERE IS NO INFLUENCE IN THE PRODUCT PERFORMANCE THOUGH THE BLACK AND WHITE SPOT ETC. MIGHT BE CONFIRMED TO THE PLASTIC PART OF THIS PRODUCT AND THE SHADE MIGHT BE DIFFERENT.
5. 発注番号：SHEET 3 参照
   ORDER No.：PLEASE REFER TO SHEET 3 FOR PRODUCT LIST.

504693 ****

極数
CIRCUIT SIZE

ハウジングカラー HOUSING COLOR
00:自然色　NATURAL
01:黒　BLACK
02:赤　RED
03:黄　YELLOW
04:青　BLUE
05:桃　PINK
06:緑　GREEN
08:橙　ORANGE
09:紫　VIOLET
11:灰　GRAY
16:黄緑　YELLOWISH GREEN

(B)	A	極数 CIRCUIT SIZE
16.5	23.1±0.25	6
9.9	16.5±0.25	4
6.6	13.2±0.25	3
3.3	9.9	2

1 TABLE 1

部品 PART	材料 MATERIAL
ハウジング HOUSING	PBT, UL-94 V-0,色 : SEE CHART PBT, UL-94 V-0,COLOR : SEE CHART

THIS DRAWING CONTAINS INFORMATION THAT IS PROPRIETARY TO MOLEX ELECTRONIC TECHNOLOGIES, LLC AND SHOULD NOT BE USED WITHOUT WRITTEN PERMISSION

FUNCTIONAL SYMBOLS: FA = 0, FC = 0, FP = 0
DIVISIONAL SYMBOLS

DIMENSION UNITS: mm　SCALE: 5:1
GENERAL TOLERANCES (UNLESS SPECIFIED)
ANGULAR TOL ± 0.5°
4 PLACES ±
3 PLACES ±
2 PLACES ±
1 PLACE ±
0 PLACES ±
DRAFT WHERE APPLICABLE MUST REMAIN WITHIN DIMENSIONS

CURRENT REV DESC: New PN added

STATUS: Production
DRWN: VINOTHKUMAR S 2026-05-18
CHK'D: Revanth Ashok 2026-05-27
APPR: Saravanakumar Murugesan 2026-05-27

THIRD ANGLE PROJECTION　DRAWING: A3-SIZE　SERIES: 504693

molex

CP3.3 W/W SINGLE ROW REC HOUSING
NEW PART NUMBER ADDED

PRODUCT CUSTOMER DRAWING

DOCUMENT NUMBER	DOC TYPE	DOC PART	REVISION
5046930000-SD	PSD	000	A2

MATERIAL NUMBER	CUSTOMER	SHEET NUMBER
SEE CHART	GENERAL MARKET	1 OF 3

FORMAT: TC-Dr-spec-A3
REVISION: B
DATE: 2022/08/01

△2 適応製品及び各種仕様書
APPLICABLE PRODUCTS AND VARIOUS SPECIFICATIONS

梱包仕様書 PACKING SPECIFICATION	PART NUMBER	SPECIFICATION NUMBER
	504693****	SPK-504693-001

適応端子 APPLY TERMINAL	PART NUMBER	PLATING TYPE	WIRE SIZE(AWG)
	5056070*00	TIN	#18 - #22
	503978*00		#22 - #28

適応嵌合相手 APPLY MATE	TIN PLATING REC HSG
シリーズ番号 SERIES No.	504694
適応リテーナー APPLY RETAINER	RETAINER
シリーズ番号 SERIES No.	504695
製品仕様書 PRODUCT SPECIFICATION	PS-504693-001
アプリケーション仕様書 APPLICATION SPECIFICATION	AS-504693-001(JAPANESE)/-002(ENGLISH)

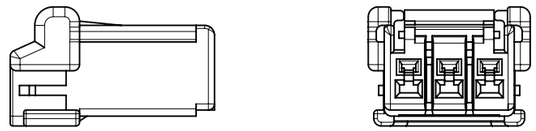

FIGURE OF 3 CIRCUIT

FIGURE OF 4 CIRCUIT

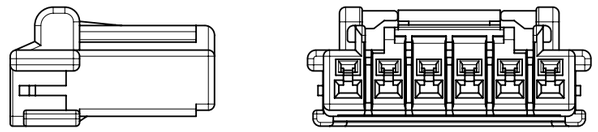

FIGURE OF 6 CIRCUIT

嵌合図
MATING CONNECTORES

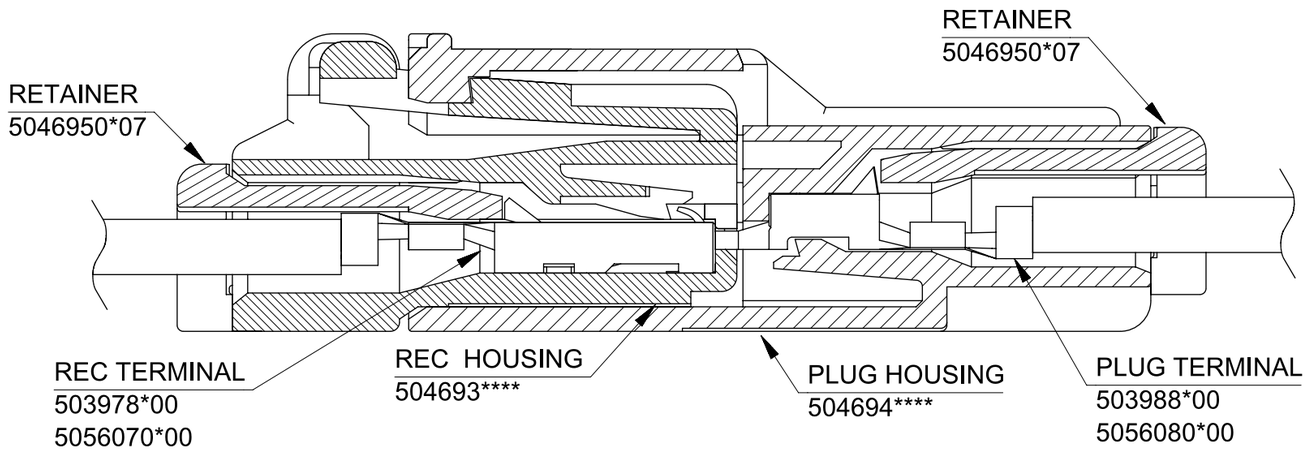

THIS DRAWING CONTAINS INFORMATION THAT IS PROPRIETARY TO MOLEX ELECTRONIC TECHNOLOGIES, LLC AND SHOULD NOT BE USED WITHOUT WRITTEN PERMISSION

FUNCTIONAL SYMBOLS: FA = 0, FC = 0, FP = 0
DIVISIONAL SYMBOLS

DIMENSION UNITS	SCALE
mm	2:1

GENERAL TOLERANCES (UNLESS SPECIFIED)

ANGULAR TOL	± 0.5°
4 PLACES	±
3 PLACES	±
2 PLACES	±
1 PLACE	±
0 PLACES	±

DRAFT WHERE APPLICABLE MUST REMAIN WITHIN DIMENSIONS

CURRENT REV DESC: New PN added

STATUS: Production
DRWN: VINOTHKUMAR S 2026-05-18
CHK'D: Revanth Ashok 2026-05-27
APPR: Saravanakumar Murugesan 2026-05-27

THIRD ANGLE PROJECTION

molex

CP3.3 W/W SINGLE ROW REC HOUSING
NEW PART NUMBER ADDED

PRODUCT CUSTOMER DRAWING

DOCUMENT NUMBER	DOC TYPE	DOC PART	REVISION
5046930000-SD	PSD	000	A2

DRAWING	SERIES	MATERIAL NUMBER	CUSTOMER	SHEET NUMBER
A3-SIZE	504693	SEE CHART	GENERAL MARKET	2 OF 3

5 製品一覧
PRODUCT LIST

HOUSING COLOR											
YELLOWISH GREEN	GRAY	VIOLET	ORANGE	GREEN	PINK	BLUE	YELLOW	RED	BLACK	NATURAL	
-	-	-	-	-	-	5046930604	5046930603	5046930602	5046930601	5046930600	6
-	-	-	-	-	-	5046930404	5046930403	5046930402	5046930401	5046930400	4
-	-	-	5046930308	5046930306	5046930305	5046930304	5046930303	5046930302	5046930301	5046930300	3
5046930216	5046930211	5046930209	5046930208	5046930206	5046930205	5046930204	5046930203	5046930202	5046930201	5046930200	2
オーダー番号 ORDER No.											極数 CIRCUIT No.
梱包形態：ポリ袋 PACKAGING : POLYBAG											

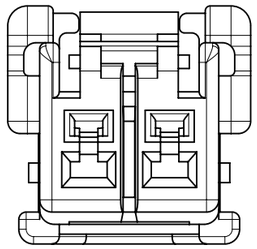

KEY TYPE : 01
COLOR : NATURAL
MATERIAL NO:5046930200

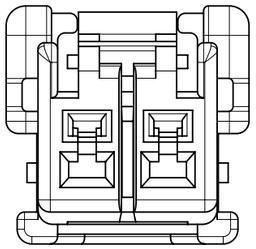

KEY TYPE : 02
COLOR : BLACK
MATERIAL NO:5046930201

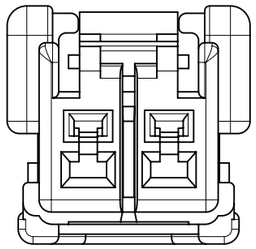

KEY TYPE : 03
COLOR : RED
MATERIAL NO:5046930202

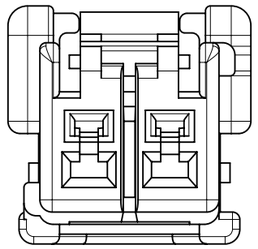

KEY TYPE : 04
COLOR : YELLOW
MATERIAL NO:5046930203

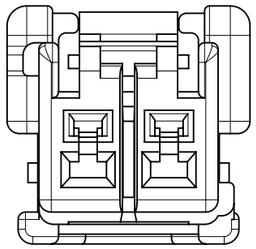

KEY TYPE : 05
COLOR : BLUE
MATERIAL NO:5046930204

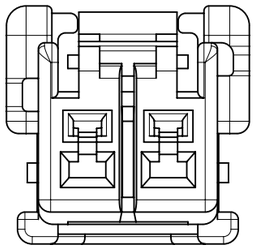

KEY TYPE : 06
COLOR : PINK
MATERIAL NO:5046930205

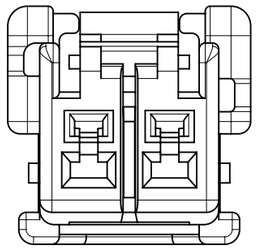

KEY TYPE : 07
COLOR : GREEN
MATERIAL NO:5046930206

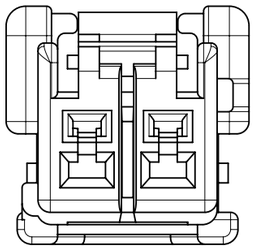

KEY TYPE : 08
COLOR : ORANGE
MATERIAL NO:5046930208

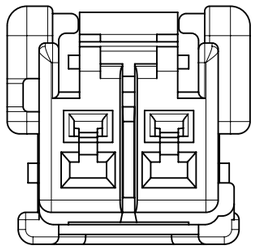

KEY TYPE : 09
COLOR : VIOLET
MATERIAL NO:5046930209

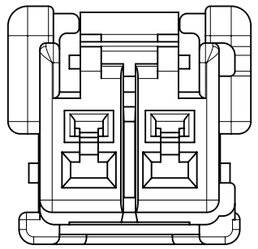

KEY TYPE : 10
COLOR : GRAY
MATERIAL NO:5046930211

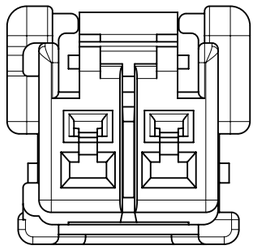

KEY TYPE : 11
COLOR : YELLOWISH GREEN
MATERIAL NO:5046930216

MATING
KEY TYPE & COLOR

FIGURE TO 2 CIRCUIT

THIS DRAWING CONTAINS INFORMATION THAT IS PROPRIETARY TO MOLEX ELECTRONIC TECHNOLOGIES, LLC AND SHOULD NOT BE USED WITHOUT WRITTEN PERMISSION

FUNCTIONAL SYMBOLS: FA = 0, FC = 0, FP = 0

DIVISIONAL SYMBOLS

DIMENSION UNITS	SCALE
mm	2:1

GENERAL TOLERANCES (UNLESS SPECIFIED)
ANGULAR TOL ± 0.5°
4 PLACES ±
3 PLACES ±
2 PLACES ±
1 PLACE ±
0 PLACES ±

DRAFT WHERE APPLICABLE MUST REMAIN WITHIN DIMENSIONS

CURRENT REV DESC: New PN added

STATUS: Production
DRWN: VINOTHKUMAR S 2026-05-18
CHK'D: Revanth Ashok 2026-05-27
APPR: Saravanakumar Murugesan 2026-05-27

THIRD ANGLE PROJECTION | DRAWING: A3-SIZE | SERIES: 504693

molex

CP3.3 W/W SINGLE ROW REC HOUSING
NEW PART NUMBER ADDED

PRODUCT CUSTOMER DRAWING

DOCUMENT NUMBER	DOC TYPE	DOC PART	REVISION
5046930000-SD	PSD	000	A2

MATERIAL NUMBER	CUSTOMER	SHEET NUMBER
SEE CHART	GENERAL MARKET	3 OF 3

FORMAT: TC-A-cmd-A3
REVISION: B
DATE: 2022/08/01