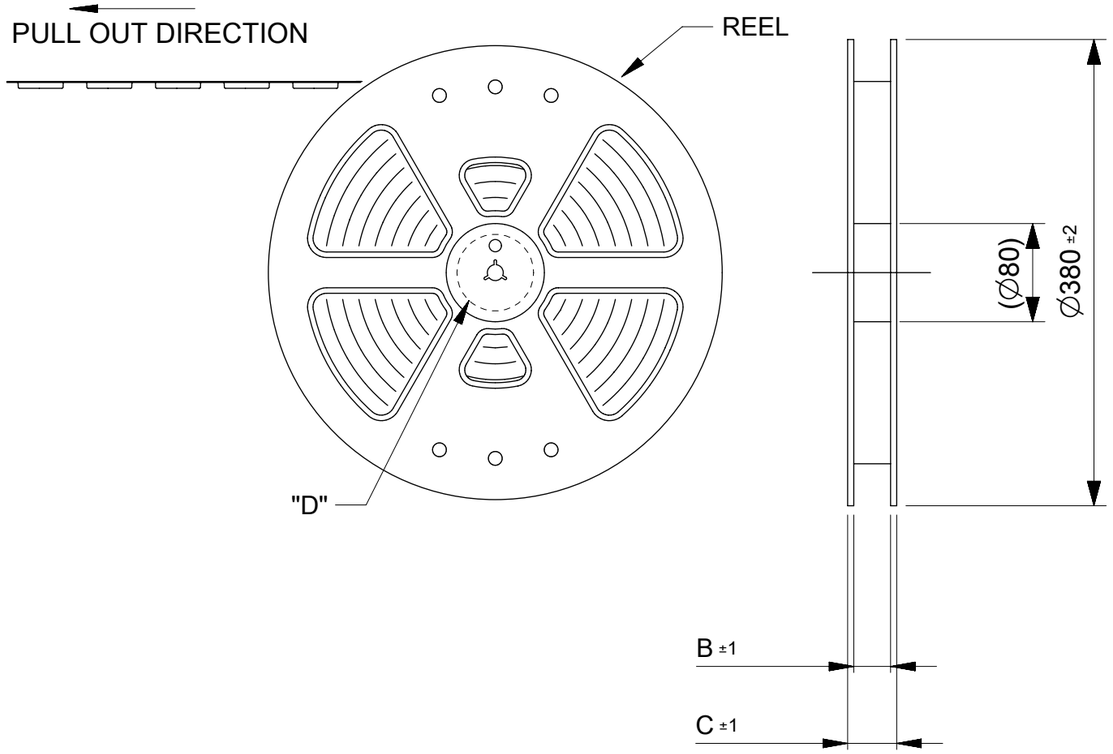

NOTES

1. RE DETAILED DIMENSION, SEE PRODUCT DRAWING.

2. NUMBER OF CONNECTORS : 20000 PCS/REEL.

3. LEAD TAPE LENGTH.

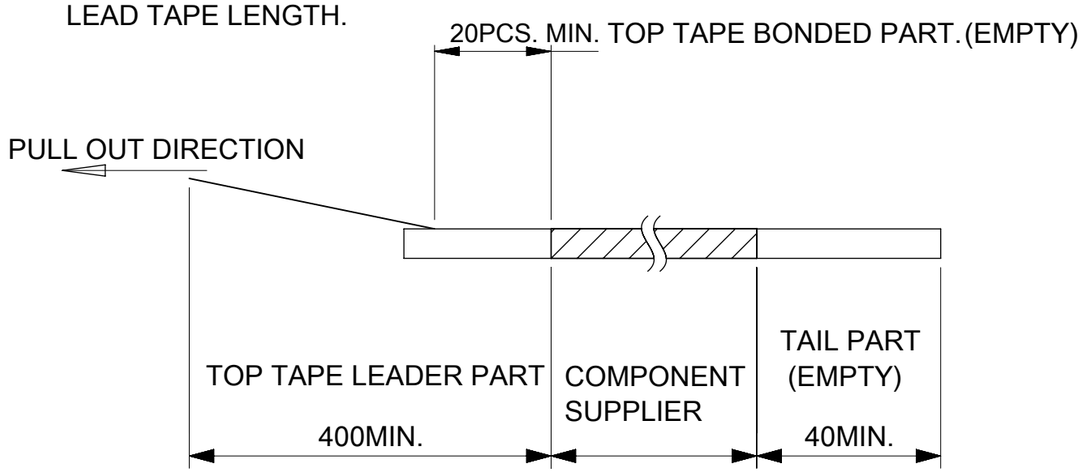

4. TOP TAPE PEEL FORCE IS DEFINED BY IEC60286-3

5. MATERIAL
CARRER TAPE :POLYSTYRENE
TOP TAPE :PET , OTHER
REEL :POLYSTYRENE(PS)(RECYCLE MATERIAL CONTAINED)

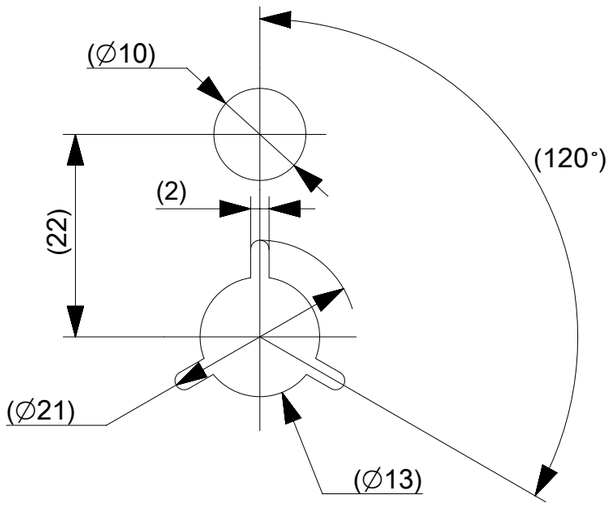

DETAIL "D"

MODEL NO. 505066-**22

THIS DRAWING CONTAINS INFORMATION THAT IS PROPRIETARY TO MOLEX ELECTRONIC TECHNOLOGIES, LLC AND SHOULD NOT BE USED WITHOUT WRITTEN PERMISSION

DIMENSION UNITS	SCALE
mm	1:5

GENERAL TOLERANCES (UNLESS SPECIFIED)

ANGULAR TOL	±	1.0 °
4 PLACES	±	0.01
3 PLACES	±	0.03
2 PLACES	±	0.05
1 PLACE	±	0.1
0 PLACES	±	0.2

DRAFT WHERE APPLICABLE MUST REMAIN WITHIN DIMENSIONS

CURRENT REV DESC:

EC NO: 730166
DRWN: RAJAGN 2022/11/28
CHK'D: YNUKANOBU 2022/11/30
APPR: YNAITO 2022/11/30

INITIAL REVISION:
DRWN: YSEKI01 2021/11/11
APPR: YNAITO 2021/11/16

molex

0.35 BB CONN. H=0.6 SSB6 RP REC ASSY EMBSTP PKG

PRODUCT CUSTOMER DRAWING

THIRD ANGLE PROJECTION	DRAWING	SERIES
	A3-SIZE	505066

DOCUMENT NUMBER	DOC TYPE	DOC PART	REVISION
5050660000	PSD	013	C

MATERIAL NUMBER	CUSTOMER	SHEET NUMBER
SEE CHART	GENERAL	1 OF 2

DOCUMENT STATUS	P1	RELEASE DATE	2022/11/30 09:39:57

FORMAT: master-tb-prod-A3
REVISION: J1
DATE: 2021/05/01

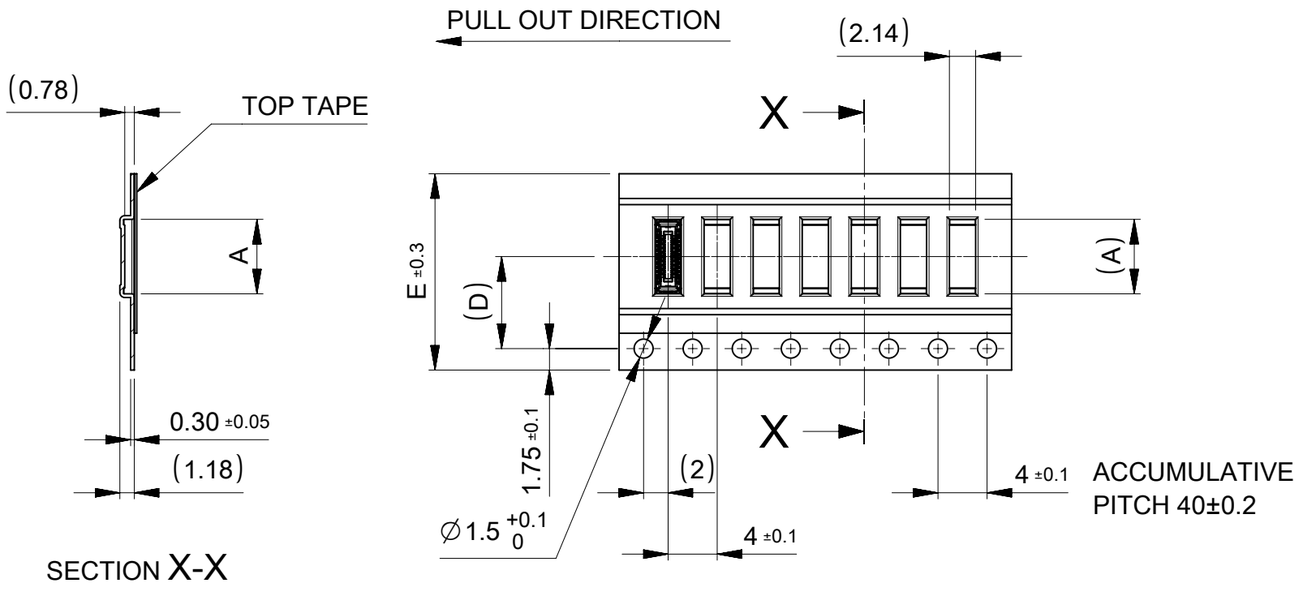

16	7.5	21.4	17.4	6.77	505066-2422	○	---	24
				5.37	505066-1622	○	---	16
E キャリアテープ幅 CARRIER TAPE WIDTH	(D)	C	B	(A)	MATERIAL No.	HIGH VOL. TOOL	LOW VOL. TOOL	CIRCUIT
						SAMPLE PREPARATION		

THIS DRAWING CONTAINS INFORMATION THAT IS PROPRIETARY TO MOLEX ELECTRONIC TECHNOLOGIES, LLC AND SHOULD NOT BE USED WITHOUT WRITTEN PERMISSION

DIMENSION UNITS	SCALE
mm	2:1

GENERAL TOLERANCES (UNLESS SPECIFIED)

ANGULAR TOL	± 1.0 °
4 PLACES	± 0.01
3 PLACES	± 0.03
2 PLACES	± 0.05
1 PLACE	± 0.1
0 PLACES	± 0.2

DRAFT WHERE APPLICABLE MUST REMAIN WITHIN DIMENSIONS

CURRENT REV DESC:

EC NO: 730166
DRWN: RAJAGN 2022/11/28
CHK'D: YNUKANOBU 2022/11/30
APPR: YNAITO 2022/11/30

INITIAL REVISION:
DRWN: YSEKI01 2021/11/11
APPR: YNAITO 2021/11/16

molex

0.35 BB CONN. H=0.6 SSB6 RP REC ASSY
EMBSTP PKG

PRODUCT CUSTOMER DRAWING

DOCUMENT NUMBER	DOC TYPE	DOC PART	REVISION
5050660000	PSD	013	C

THIRD ANGLE PROJECTION	DRAWING	SERIES	MATERIAL NUMBER	CUSTOMER	SHEET NUMBER
	A3-SIZE	505066	SEE CHART	GENERAL	2 OF 2

DOCUMENT STATUS	P1	RELEASE DATE	2022/11/30 09:39:57

FORMAT: master-ib-prod-A3
REVISION: J1
DATE: 2021/05/01

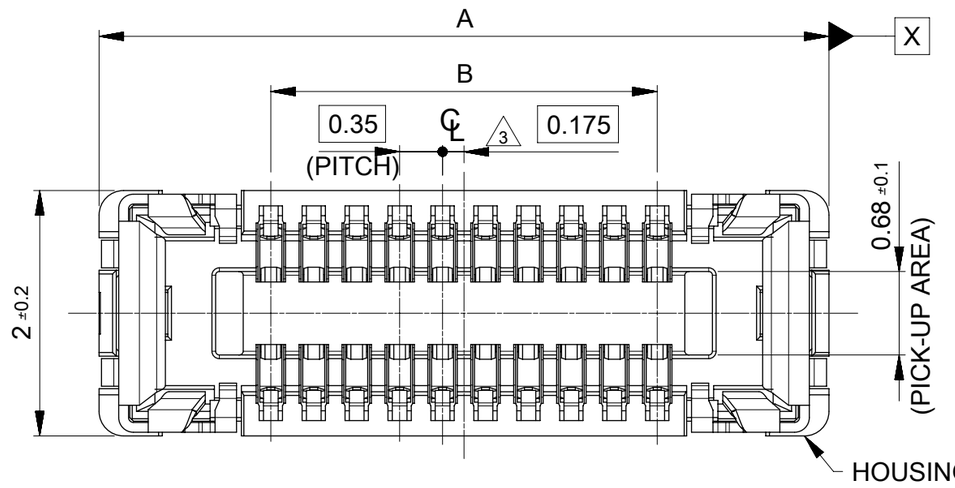

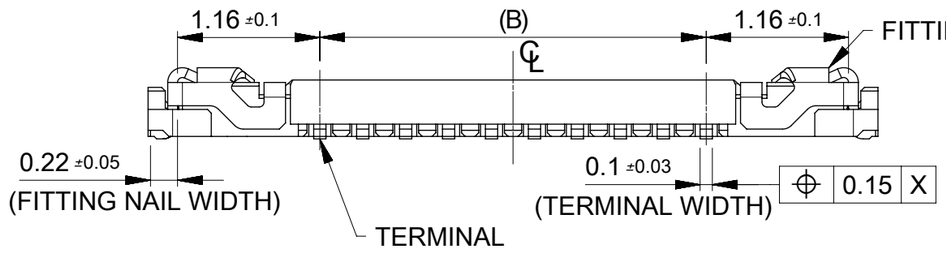

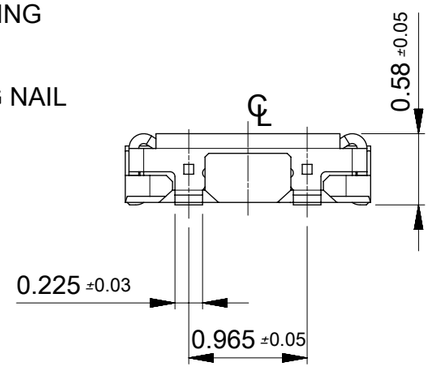

NOTES

1 MATERIAL
WAFER:LIQUID CRYSTAL POLYMER UL94V-0(COLOR :BLACK)
TERMINAL:COPPER ALLOY
FITTING NAIL : COPPER ALOY

2 PLATING
TERMINAL :
CONTACT AREA: SEPARATED GOLD PLATING
(0.1 MICROMETER MINIMUM).
SOLDER TAIL AREA: SEPARATED GOLD PLATING.
UNDERPLATE: NICKEL OVERALL.
*DIVIDE INTO PARTS THE GOLD PLATING OF THE CONTACT
AND THE TAIL PART BY THE NICKEL PLATING.
FITTING NAIL :
CONTACT AREA: SEPARATED GOLD PLATING
(0.1 MICROMETER MINIMUM).
SOLDER TAIL AREA: SEPARATED GOLD PLATING.
UNDERPLATE: NICKEL OVERALL.
*DIVIDE INTO PARTS THE GOLD PALATING OF THE CONTACT
AND THE TAIL PART BY THE NICKEL PLATING.
*EVEN THOUGH GOLD PLATING ON THE TOP SURFACE OF NAIL
MIGHT BE THIN, NO FUNCTIONAL PROBLEM.

△3 APPLY FOR (CIRCUIT/2)=EVEN.

4 MATE WITH : 505070-**22/ 505070-**42

5 TAIL AND FITTING NAIL COPLANARITY TO BE 0.08MAXIMUM.

△6 PROHIITED AREA OF PATTERN WIRING AND SOLDER.
(FOR EACH AREA, THE WIRING THAT TOUCHES ON THE SOLDER
CAN BE ATTACHED, THEN COVERED WITH A FILMTO KEEP SOLDER OUT).

11.90	14.70	505066-7022	---	---	70
10.85	13.65	505066-6422	---	---	64
10.15	12.95	505066-6022	---	---	60
9.80	12.60	505066-5822	---	---	58
9.10	11.90	505066-5422	○	---	54
8.40	11.20	505066-5022	○	---	50
8.05	10.85	505066-4822	○	---	48
7.70	10.50	505066-4622	---	---	46
7.00	9.80	505066-4222	○	---	42
6.65	9.45	505066-4022	○	---	40
6.30	9.10	505066-3822	---	---	38
5.60	8.40	505066-3422	○	---	34
5.25	8.05	505066-3222	---	---	32
4.90	7.70	505066-3022	○	---	30
3.85	6.65	505066-2422	○	---	24
3.50	6.30	505066-2222	○	---	22
3.15	5.95	505066-2022	○	---	20
2.80	5.60	505066-1822	---	---	18
2.45	5.25	505066-1622	○	---	16
2.10	4.90	505066-1422	○	---	14
1.75	4.55	505066-1222	○	---	12
1.40	4.20	505066-1022	○	---	10
1.05	3.85	505066-0822	○	---	8
0.70	3.50	505066-0622	○	---	6
B	A	EMBOSSED TAPE PACKAGE	HIGH VOL. TOOL	LOW VOL. TOOL	CIRCUIT
		ORDER NO.	SAMPLE PREPARATION ○ :TOOLED △ :WORK IN PROCESS --- :TOOLING TO BE CONFIRMED		

CONNECTOR SERIES No. : 505066-**09

THIS DRAWING CONTAINS INFORMATION THAT IS PROPRIETARY TO MOLEX ELECTRONIC TECHNOLOGIES, LLC AND SHOULD NOT BE USED WITHOUT WRITTEN PERMISSION

DIMENSION UNITS	SCALE
mm	20:1

GENERAL TOLERANCES (UNLESS SPECIFIED)

ANGULAR TOL	± 1.0 °
4 PLACES	± 0.001
3 PLACES	± 0.003
2 PLACES	± 0.03
1 PLACE	± 0.1
0 PLACES	± 0.2

DRAFT WHERE APPLICABLE MUST REMAIN WITHIN DIMENSIONS

CURRENT REV DESC: REVISED

EC NO: 612826
DRWN: GSHARMA 2019/02/22
CHK'D: MSASAO 2019/02/27
APPR: MSASAO 2019/02/27

INITIAL REVISION:
DRWN: TNISHIDA02 2017/03/28
APPR: TKUSUHARA01 2017/04/03

THIRD ANGLE PROJECTION | DRAWING: A3-SIZE | SERIES: 505066

molex

0.35 BB CONN. H=0.6 SSB6 RP

PRODUCT CUSTOMER DRAWING

DOCUMENT NUMBER	DOC TYPE	DOC PART	REVISION
5050661000	PSD	016	C

MATERIAL NUMBER	CUSTOMER	SHEET NUMBER
	GENERAL	1 OF 2

DOCUMENT STATUS	P1	RELEASE DATE	2019/02/27 05:28:33

FORMAT: master_sheet-A3
REVISION: H
DATE: 2018/01/16

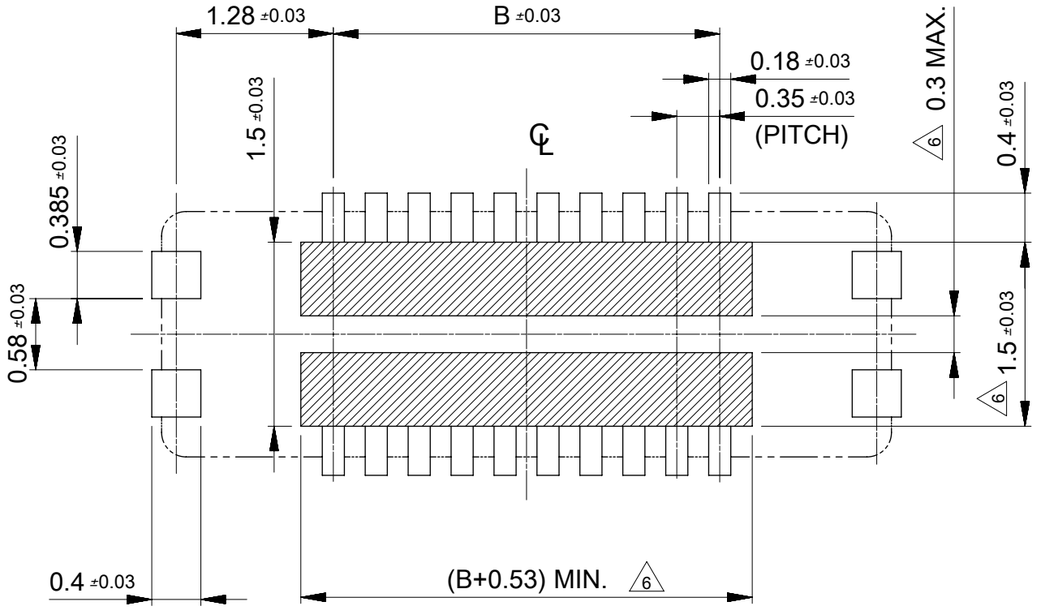

RECOMMENDED P.W.BOARD PATTERN LAYOUT (REFERENCE)

6 PROHIBITED AREA OF PATTERN WIRING AND SOLDER
(FOR EACH AREA, THE WIRING THAT TOUCHES ON THE SOLDER
CAN BE ATTACHED, THEN COVERED WITH A FILM TO KEEP SOLDER OUT)

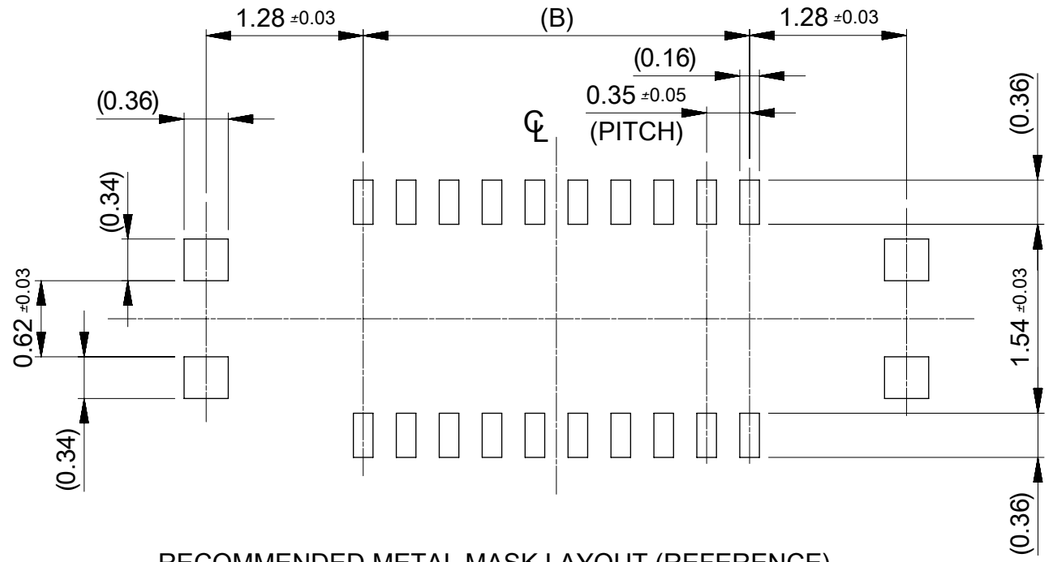

RECOMMENDED METAL MASK LAYOUT (REFERENCE)

RECOMMENDED THICKNESS OF METAL MASK : t=0.08mm
RECEMMENDED OPEN APERTURE RATIO OF METAL MASK : 80%

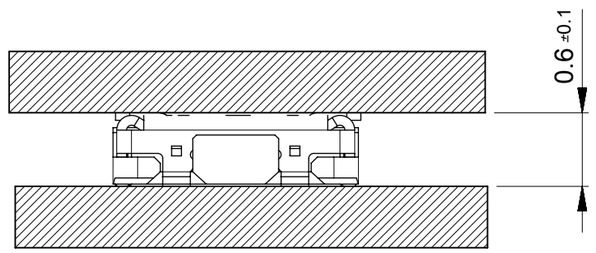

MATED CONDITION

DOCUMENT STATUS	P1	RELEASE DATE	2019/02/27	05:28:33

THIS DRAWING CONTAINS INFORMATION THAT IS PROPRIETARY TO MOLEX ELECTRONIC TECHNOLOGIES, LLC AND SHOULD NOT BE USED WITHOUT WRITTEN PERMISSION

DIMENSION UNITS	SCALE
mm	20:1

GENERAL TOLERANCES (UNLESS SPECIFIED)

ANGULAR TOL	±	1.0 °
4 PLACES	±	0.001
3 PLACES	±	0.003
2 PLACES	±	0.03
1 PLACE	±	0.1
0 PLACES	±	0.2

DRAFT WHERE APPLICABLE MUST REMAIN WITHIN DIMENSIONS

CURRENT REV DESC: REVISED

EC NO: 612826
DRWN: GSHARMA 2019/02/22
CHK'D: MSASAO 2019/02/27
APPR: MSASAO 2019/02/27

INITIAL REVISION:
DRWN: TNISHIDA02 2017/03/28
APPR: TKUSUHARA01 2017/04/03

THIRD ANGLE PROJECTION | DRAWING: A3-SIZE | SERIES: 505066

molex

0.35 BB CONN. H=0.6 SSB6 RP

PRODUCT CUSTOMER DRAWING

DOCUMENT NUMBER	DOC TYPE	DOC PART	REVISION
5050661000	PSD	016	C

MATERIAL NUMBER	CUSTOMER	SHEET NUMBER
	GENERAL	2 OF 2

FORMAT: master-thumbnail-A3
REVISION: H
DATE: 2018/01/18