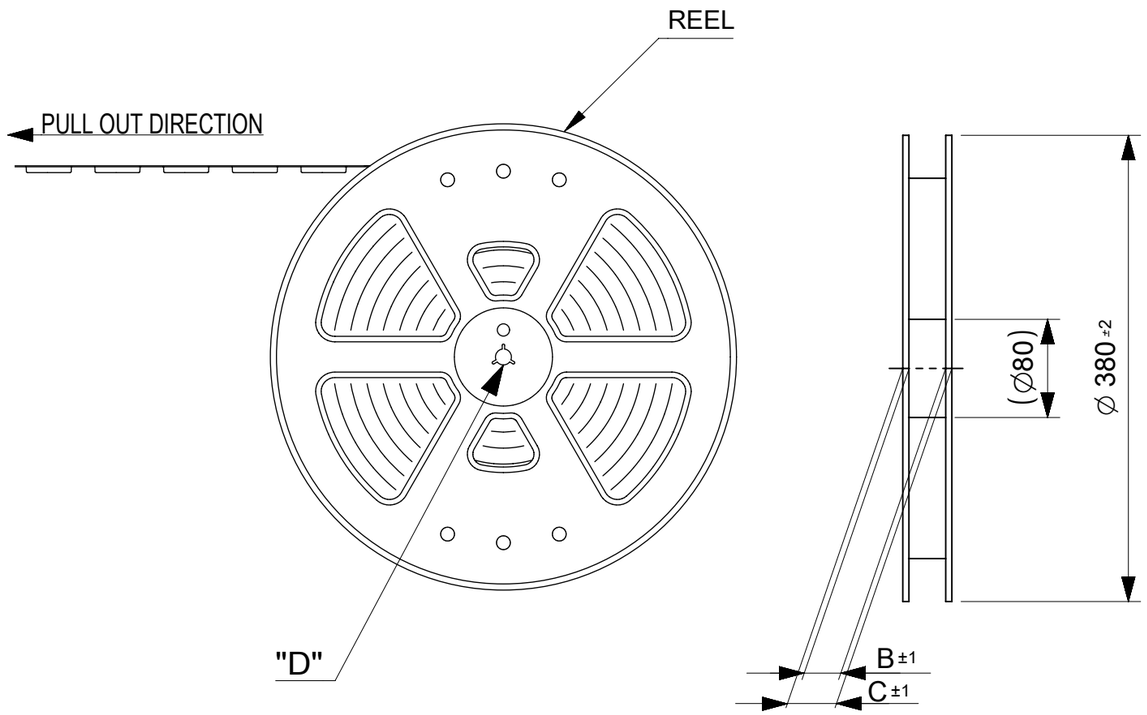

NOTES

1. FOR DIMENSION OF PRODUCT, REFER TO PRODUCT DRAWING.
2. NUMBER OF CONNECTORS : 7000PCS/REEL
3. LEAD TAPE LENGTH

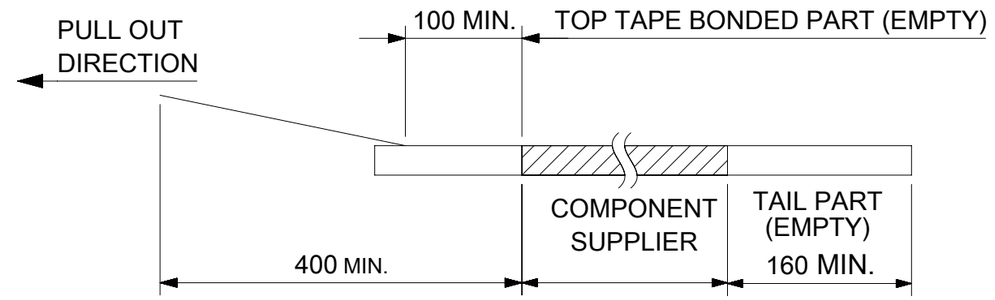

4. TOP TAPE PEEL FORCE IS DEFINED BY IEC60286-3.
5. MATERIAL
   CARRIER TAPE : POLYSTYRENE
   TOP TAPE : PET , OTHER
   REEL : POLYSTYRENE (PS) < RECYCLE MATERIAL CONTAINED >

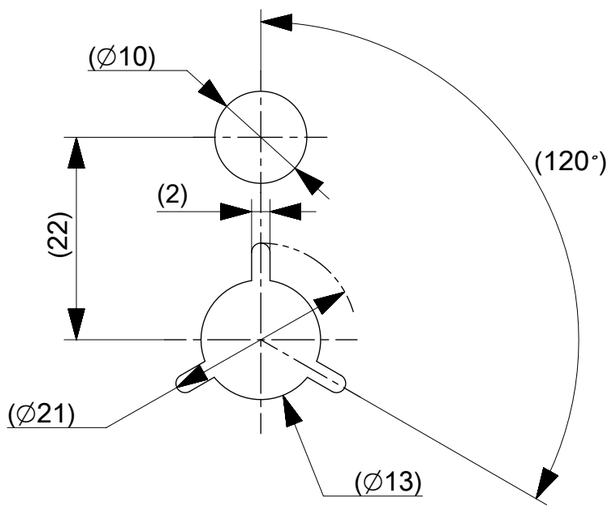

DETAIL "D"

CONNECTOR SERIES NO. 505274**39

THIS DRAWING CONTAINS INFORMATION THAT IS PROPRIETARY TO MOLEX ELECTRONIC TECHNOLOGIES, LLC AND SHOULD NOT BE USED WITHOUT WRITTEN PERMISSION

RELEASED	2017/10/23		
	2017/11/01		
	2017/11/02		
EC NO:	123537		
DRWN:	FSATO		
CHK'D:	MSASAO		
APPR:	MSASAO		
REV	A		

GENERAL TOLERANCES (UNLESS SPECIFIED)

ANGULAR TOL ±	3.0 °
4 PLACES	± 0.03
3 PLACES	± 0.03
2 PLACES	± 0.05
1 PLACE	± 0.1
0 PLACES	± 0.2

DRAFT WHERE APPLICABLE MUST REMAIN WITHIN DIMENSIONS

DIMENSION UNITS	mm
SCALE	NTS
DRWN BY	FSATO
DATE	2017/10/23
CHK'D BY	MSASAO
DATE	2017/11/01
APPR BY	MSASAO
DATE	2017/11/02
DRAWING SIZE	A3
	THIRD ANGLE PROJECTION

molex®

0.35 BB H=0.8 SSB8RP PLUG EMBSTP PKG

PRODUCT CUSTOMER DRAWING

SERIES	MATERIAL NUMBER	CUSTOMER
505274	SEE CHART	GENERAL

DOCUMENT NUMBER	DOC TYPE	DOC PART	SHEET NUMBER
5052740002-SD	PSD	000	1 OF 3

RELEASE STATUS	P1	RELEASE DATE	02.11.2017 01:50:54

FORMAT: master-tb-prod-A3
REVISION: G
DATE: 2017/02/06

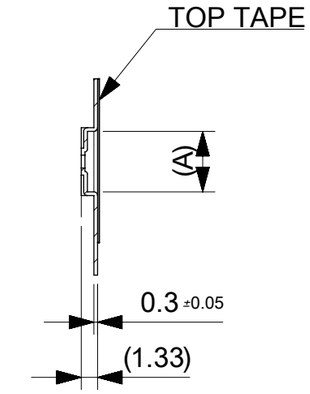

SECTION A-A

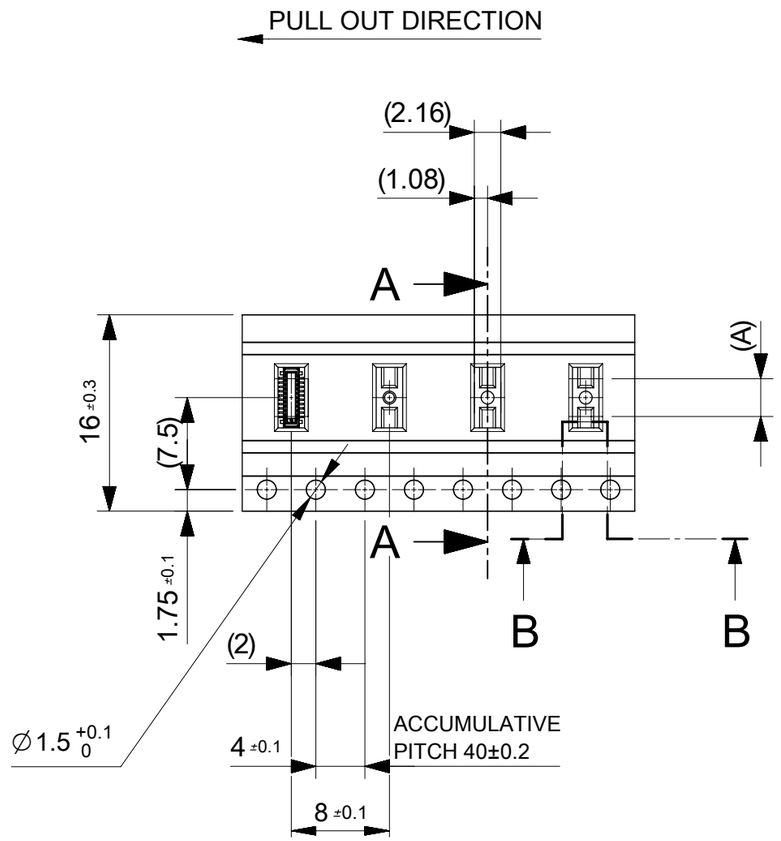

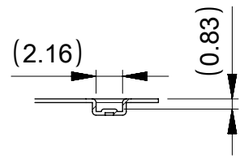

SECTION B-B

キャリアテープ幅 CARRIER TAPE WIDTH	C	B	(A)	EMBOSSED TAPE PACKAGE / ORDER NO.	HIGH VOL. TOOL	LOW VOL. TOOL	CIRCUIT
16	21.4	17.4	6.68	5052743042	○	---	30
			5.63	5052742442	○	---	24
			4.93	5052742042	○	---	20
			4.23	5052741642	○	---	16
			3.18	5052741042	○	---	10
			2.48	5052740642	○	---	6

SAMPLE PREPARATION
○:TOOLED
△:WOOK IN PROCESS
---:TOOLING TO BE CONFIRMED

THIS DRAWING CONTAINS INFORMATION THAT IS PROPRIETARY TO MOLEX ELECTRONIC TECHNOLOGIES, LLC AND SHOULD NOT BE USED WITHOUT WRITTEN PERMISSION

RELEASED
EC NO: 123537 2017/10/23
DRWN: FSATO 2017/11/01
CHK'D: MSASAO 2017/11/02
APPR: MSASAO

GENERAL TOLERANCES (UNLESS SPECIFIED)	
ANGULAR TOL ± 3.0 °	
4 PLACES	± 0.03
3 PLACES	± 0.03
2 PLACES	± 0.05
1 PLACE	± 0.1
0 PLACES	± 0.2

DRAFT WHERE APPLICABLE MUST REMAIN WITHIN DIMENSIONS

DIMENSION UNITS	SCALE
mm	NTS
DRWN BY: FSATO	DATE: 2017/10/23
CHK'D BY: MSASAO	DATE: 2017/11/01
APPR BY: MSASAO	DATE: 2017/11/02
DRAWING SIZE: A3	THIRD ANGLE PROJECTION

molex®

0.35 BB H=0.8 SSB8RP PLUG EMBSTP PKG

PRODUCT CUSTOMER DRAWING

SERIES	MATERIAL NUMBER	CUSTOMER
505274	SEE CHART	GENERAL

DOCUMENT NUMBER	DOC TYPE	DOC PART	SHEET NUMBER
5052740002-SD	PSD	000	2 OF 3

REV: A

RELEASE STATUS	P1	RELEASE DATE	02.11.2017 01:50:54

FORMAT: master-tb-prod-A3
REVISION: G
DATE: 2017/02/06

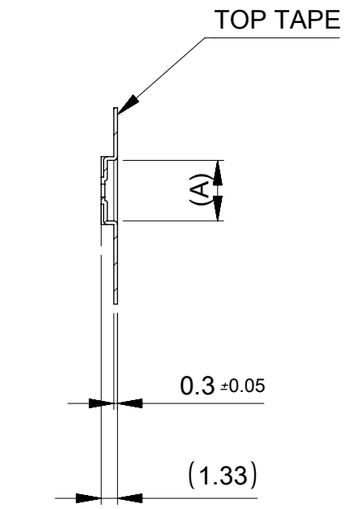

SECTION C-C

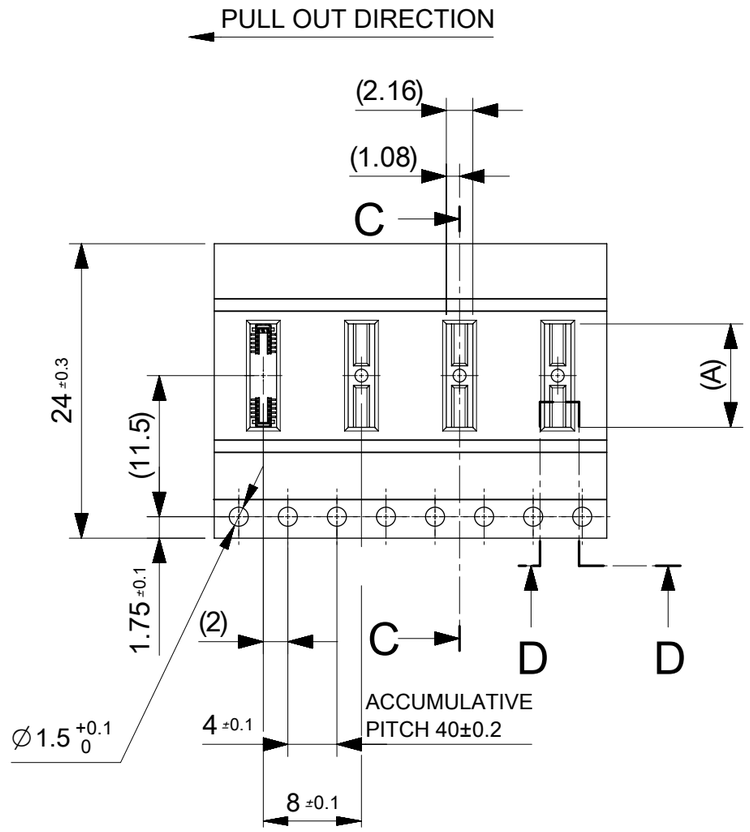

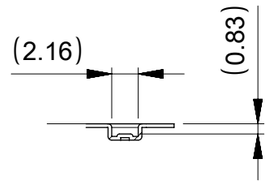

SECTION D-D

24	29.4	25.4	10.88	5052745442	○	---	54
			8.43	5052744042	○	---	40
			7.38	5052743442	○	---	34
キャリアテープ幅 CARRIER TAPE WIDTH	C	B	(A)	EMBOSSED TAPE PACKAGE	HIGH VOL. TOOL	LOW VOL. TOOL	CIRCUIT
				ORDER NO.	SAMPLE PREPARATION ○:TOOLED △:WOOK IN PROCESS ---:TOOLING TO BE CONFIRMED		

THIS DRAWING CONTAINS INFORMATION THAT IS PROPRIETARY TO MOLEX ELECTRONIC TECHNOLOGIES, LLC AND SHOULD NOT BE USED WITHOUT WRITTEN PERMISSION

RELEASED
EC NO: 123537 2017/10/23
DRWN: FSATO 2017/11/01
CHK'D: MSASAO 2017/11/01
APPR: MSASAO 2017/11/02

REV
A

GENERAL TOLERANCES (UNLESS SPECIFIED)

ANGULAR TOL ± 3.0 °	
4 PLACES	± 0.03
3 PLACES	± 0.03
2 PLACES	± 0.05
1 PLACE	± 0.1
0 PLACES	± 0.2

DRAFT WHERE APPLICABLE MUST REMAIN WITHIN DIMENSIONS

DIMENSION UNITS	mm
SCALE	NTS
DRWN BY	FSATO
DATE	2017/10/23
CHK'D BY	MSASAO
DATE	2017/11/01
APPR BY	MSASAO
DATE	2017/11/02
DRAWING SIZE	A3
THIRD ANGLE PROJECTION	

molex®

0.35 BB H=0.8 SSB8RP PLUG EMBSTP PKG

PRODUCT CUSTOMER DRAWING

SERIES	MATERIAL NUMBER	CUSTOMER
505274	SEE CHART	GENERAL

DOCUMENT NUMBER	DOC TYPE	DOC PART	SHEET NUMBER
5052740002-SD	PSD	000	3 OF 3

RELEASE STATUS	P1	RELEASE DATE	02.11.2017 01:50:54

FORMAT: master-tb-prod-A3
REVISION: G
DATE: 2017/02/06

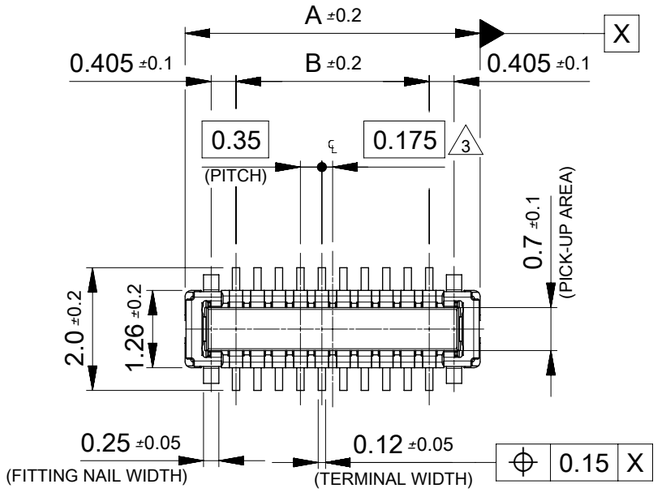

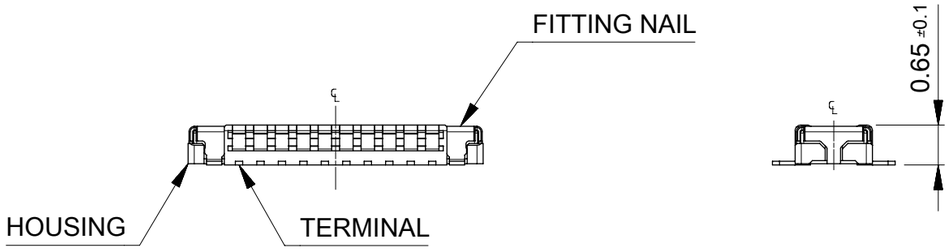

NOTES

1. MATERIAL
   HOUSING : LIQUID CRYSTAL POLYMER UL94V-0 (COLOR : BLACK)
   TERMINAL : COPPER ALLOY
   FITTING NAIL : COPPER ALLOY
2. PLATING
   TERMINAL :
   GOLD
   UNDER PLATING NICKEL
   *DIVIDE INTO PARTS THE GOLD PLATING OF CONTACT
   FITTING NAIL :
   GOLD(ONLY CONTACT AND TAIL PART)
   UNDER PLATING NICKEL
   *GOLD PLATING WILL BE DIVIDED THE CONTACT FROM THE TAIL PART BY THE NICKEL PLATING. THERE MAY BE SLIGHT DIFFERENCES IN THE OTHER PART COLORING. BUT THERE WILL BE NO INFLUENCE ON THE PRODUCT'S PAERFORMANCE.

△3 APPLY FOR (CIRCUIT/2)=EVEN

4. MATE WITH : 505270**12 (H=0.8) , 505413**10 (H=0.9)
5. TAIL AND FITTING NAIL COPLANARITY TO BE 0.08MAXIMUM.

△6 PROHIBITED AREA OF PATTERN WIRING AND SOLDER.
(FOR EACH AREA, THE WIRING THAT TOUCHES ON THE SOLDER CAN BE ATTACHED, THEN COVERED WITH A FILM TO KEEP SOLDER OUT.)

△7 THIS DIMENSION SHOWS THE DIMENSION BETWEEN SOLDERING SURFACE OF SOLDER TAILS.

11.96	11.36	9.1	10.76	5052745442	○	---	54
9.51	8.91	6.65	8.31	5052744042	○	---	40
8.46	7.86	5.6	7.26	5052743442	○	---	34
7.76	7.16	4.9	6.56	5052743042	○	---	30
6.71	6.11	3.85	5.51	5052742442	○	---	24
6.01	5.41	3.15	4.81	5052742042	○	---	20
5.31	4.71	2.45	4.11	5052741642	○	---	16
4.26	3.66	1.4	3.06	5052741042	○	---	10
3.56	2.96	0.7	2.36	5052740642	○	---	6
D	C	B	A	EMBOSSED TAPE PACKAGE	MASS PRODUCTION	LOW VOL. TOOL	CIRCUIT
				ORDER No.	SMAPLE PREPARATION ○: TOOLED △: WORK IN PROCESS ---: TOOLING TO BE CONFIRMED		
				CONNECTOR No. : 505274**39			

THIS DRAWING CONTAINS INFORMATION THAT IS PROPRIETARY TO MOLEX ELECTRONIC TECHNOLOGIES, LLC AND SHOULD NOT BE USED WITHOUT WRITTEN PERMISSION

DIMENSION UNITS	SCALE
mm	10:1

GENERAL TOLERANCES (UNLESS SPECIFIED)

ANGULAR TOL	±	3.0 °
4 PLACES	±	0.03
3 PLACES	±	0.03
2 PLACES	±	0.05
1 PLACE	±	0.1
0 PLACES	±	0.2

DRAFT WHERE APPLICABLE MUST REMAIN WITHIN DIMENSIONS

CURRENT REV DESC: RELEASED

EC NO: 646122
DRWN: YSEKI01 2019/09/12
CHK'D: STERUKI 2020/09/28
APPR: YNAITO 2020/09/28

INITIAL REVISION:
DRWN: FSATO 2017/10/23
APPR: MSASAO 2017/11/02

THIRD ANGLE PROJECTION | DRAWING: A3-SIZE | SERIES: 505274

molex

0.35 BB CONN. H=0.8 SSB8RP PLUG ASSY

PRODUCT CUSTOMER DRAWING

DOCUMENT NUMBER	DOC TYPE	DOC PART	REVISION
5052741002-SD	PSD	000	B

MATERIAL NUMBER	CUSTOMER	SHEET NUMBER
SEE CHART	GENERAL	1 OF 2

DOCUMENT STATUS	P1	RELEASE DATE	2020/09/28 11:59:59

FORMAT: master-lb-prod-A3
REVISION: J
DATE: 2020/01/14

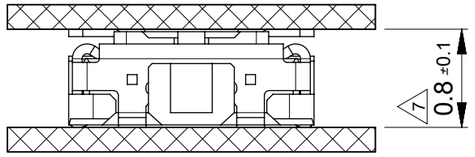

MATED CONDITION (505270/505274)

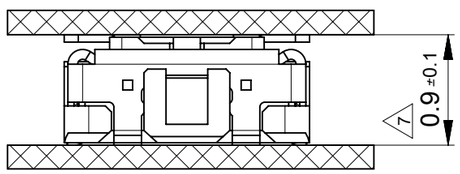

MATED CONDITION (505413/505274)

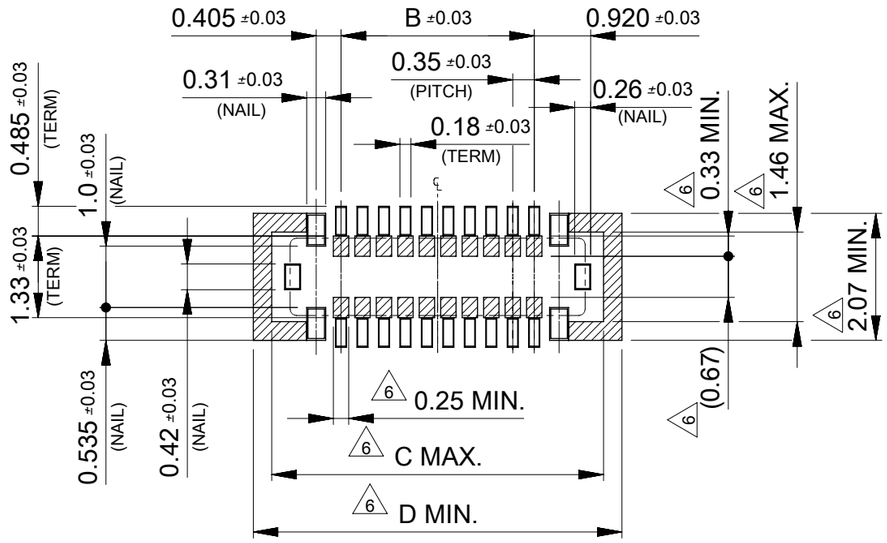

RECOMMENDED P.W.BOARD PATTERN LAYOUT (REFERENCE)

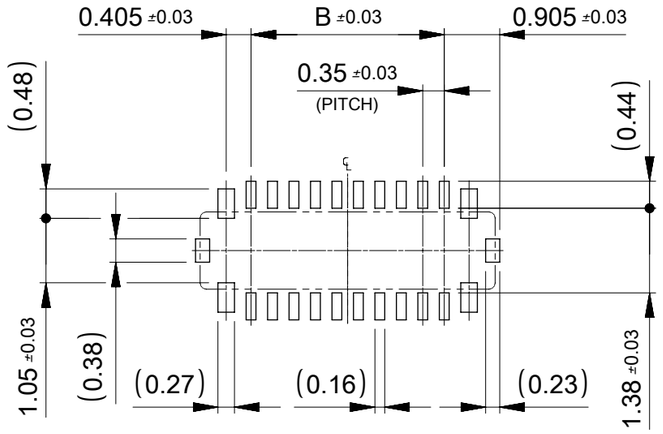

RECOMMENDED METAL MASK LAYOUT (REFERENCE)

RECOMMENDED THICKNESS OF METAL MASK : t=0.08mm
RECOMMENDED OPEN APERTURE RATIO OF METAL MASK : 80%

THIS DRAWING CONTAINS INFORMATION THAT IS PROPRIETARY TO MOLEX ELECTRONIC TECHNOLOGIES, LLC AND SHOULD NOT BE USED WITHOUT WRITTEN PERMISSION

DIMENSION UNITS	SCALE
mm	10:1

GENERAL TOLERANCES (UNLESS SPECIFIED)		
ANGULAR TOL	±	3.0 °
4 PLACES	±	0.03
3 PLACES	±	0.03
2 PLACES	±	0.05
1 PLACE	±	0.1
0 PLACES	±	0.2

DRAFT WHERE APPLICABLE MUST REMAIN WITHIN DIMENSIONS

CURRENT REV DESC: RELEASED

EC NO: 646122
DRWN: YSEKI01 2019/09/12
CHK'D: STERUKI 2020/09/28
APPR: YNAITO 2020/09/28

INITIAL REVISION:
DRWN: FSATO 2017/10/23
APPR: MSASAO 2017/11/02

THIRD ANGLE PROJECTION | DRAWING: A3-SIZE | SERIES: 505274

molex

0.35 BB CONN. H=0.8 SSB8RP PLUG ASSY

PRODUCT CUSTOMER DRAWING

DOCUMENT NUMBER	DOC TYPE	DOC PART	REVISION
5052741002-SD	PSD	000	B

MATERIAL NUMBER	CUSTOMER	SHEET NUMBER
SEE SHEET 1	GENERAL	2 OF 2

DOCUMENT STATUS	P1	RELEASE DATE	2020/09/28 11:59:59

FORMAT: master-lb-prod-A3
REVISION: J
DATE: 2020/01/14