NOTES:
1. COIL WOUND USING COPPER MAGNET WIRE WITH CLASS 155 SINGLE BUILD POLYURETHANE INSULATION.
2. FINISH WIRE ON COIL IS SECURED WITH BLUE DOT OF PAINT.
3. BOBBIN IS FULLY ANNEALED HYMU80 WITH PARYLENE COATING.
4. WITH A POSITIVE DC VOLTAGE APPLIED TO THE "FINISH" WIRE, THE MAGNETIC FIELD WILL ATTRACT A COMPASS NEEDLE AS SHOWN.
5. START & FINISH WIRE TO LIE TIGHT AGAINST COIL.
6. COIL TO BE DIPPED AT LEAST **2** TIMES WITH 13-863 (CONATHANE CE-1164) TO PROVIDE A UNIFORM LAYER OF PROTECTION ON COIL WIRES.
7. Q VALUE OVER 4 AT FREQUENCY 50KHZ.
8. SENSITIVITY MEASUREMENT IN dB re 1.0 VOLT WITH A MAGNETIC FIELD STRENGTH OF 1 A/M APPLIED TO THE COIL, LONG AXIS OF THE TELECOIL IS PARALLEL TO THE TEST MAGNETIC FIELD.
9. SOLDER SHALL NOT CONTAIN LEAD. MUST BE ROHS COMPLIANT.

ELECTRICAL CHARACTERISTICS

# OF TURNS	WIRE SIZE	INDUCTANCE @ 1KHZ (mH) ±15%	DCR@25°C (ohms) ±10%	SENSITIVITY @ 1KHZ (dB) ±2dB	w/10k Ω LOAD
5300	56H HIGH RESISTANCE	115	2200	-62.5	-64.5

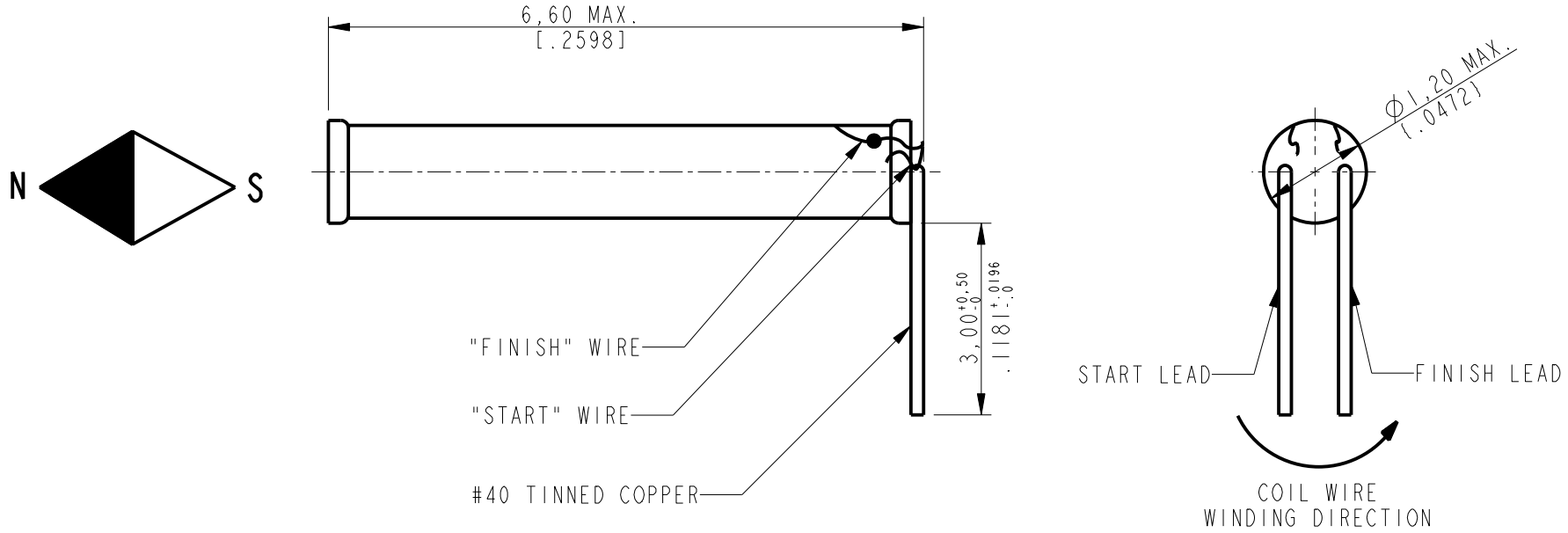

RED CONTROLLED

REV.	CHANGE #	DATE	NAME
C	C10110669	1-7-10	SDZ
B	C10104995	11/02/06	BCS
A	C10103768	01/10/06	BCS

SCALE: 15:1

FUNDAMENTAL TOLERANCE: ± 0,03 [0.001]

ANGLE TOLERANCE: ± 1°

MISMATCH TOLERANCE: ± 0,03 [0.001]

	DATE	NAME
DESIGNED	01/10/06	BCS
CHECKED	01/10/06	BCS
RELEASED	01/10/06	TDS

PROPRIETARY NOTE: THIS DOCUMENT CONTAINS INFORMATION WHICH IS THE PROPRIETARY PROPERTY OF KNOWLES ELECTRONICS, LLC. OR ITS AFFILIATED ENTITIES. IT IS ISSUED IN STRICT CONFIDENCE AND SHALL NOT BE REPRODUCED, COPIED, USED, OR DISCLOSED TO ANY THIRD PARTY PARTIALLY OR WHOLLY IN ANY MANNER WITHOUT PRIOR WRITTEN PERMISSION OF, AND MUST BE RETURNED UPON REQUEST BY, KNOWLES ELECTRONICS, LLC.

KNOWLES

MATERIAL: - - -

HEAT TREATMENT:

FINISH:

TITLE: **FINISHED 07 COIL W/RADIAL TERMINAL PAD**

RELEASED LEVEL: Active

REVISION: C

DRAWING NUMBER: 5100-253335

SHEETS: 1 of 1