5100H1/5
Bi-color LED Panel Mount Indicator with Hi Dome Lens



Red/Green 510x Series LED Round Panel Mount Indicator that snap fit into 0.25″ (6.35mm) panel hole diameter

Application

- Aircraft and Military
- Panel Indication
- Electrical Control Panels
- Industrial Machinery
- Instrument Panels
- Automation & Control
- Appliances
- Transportation Dashboards
- Displays

Key Features

- LED output color: Red/Green
- LED Size: 5mm (T-1 3/4)
- Low current
- Voltage: 2.2 V
- Panel hole diameter: 0.25″ (6.35mm)
- Panel Thickness: 0.031″ to 0.062″ (.79mm to 1.58mm)
- Available wire gauge: 24 AWG
- Snap in front panel mounting
- For additional options please contact VCC
- RoHS and REACH Compliant

Product Dimensions

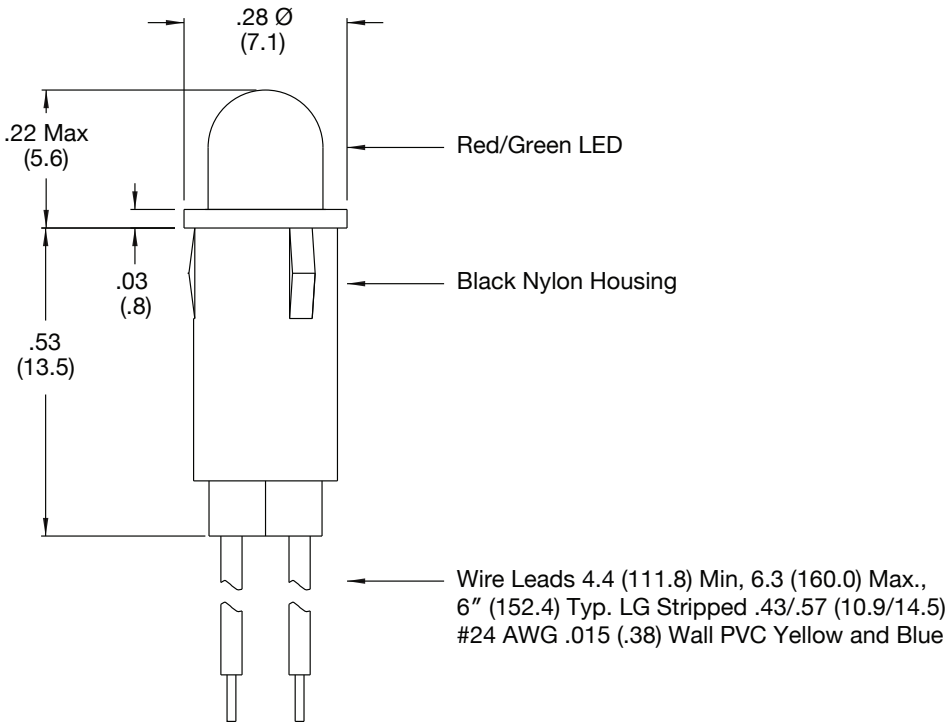

Recommended Mounting Hole

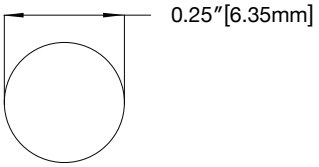

Internal Circuitry

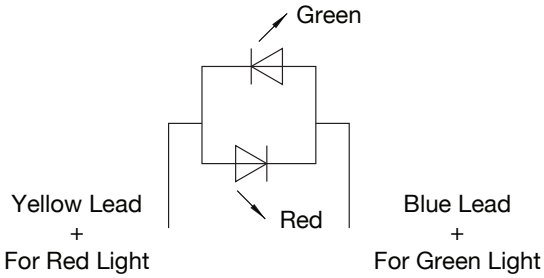

Notes:
1. All dimensions are in inches (millimeters)
2. Tolerance is ± .015 [.3] unless otherwise noted

Product Specifications

Part Number	Emitted Color	Typical Intensity (mcd)	Rated Current (mA)	Continuous Forward Current Max (mA)	Forward Voltage		Peak Forward Current@1ms-300 PPS (A)	Reverse Breakdown Voltage Min.	Peak Wavelength (nm)
					Typ. (V)	Max. (V)			
5100H1/5	Red/Green	6	20	10	2.2	2.8	-	-	650

Compliances and Approvals