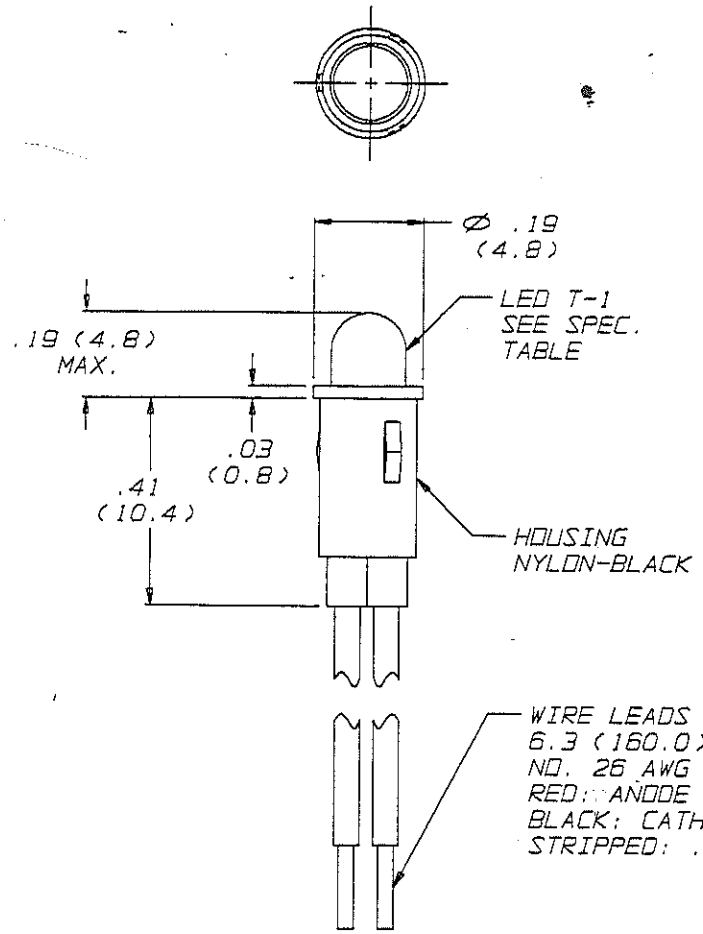

MODEL NO.	COLOR	INCORPORATES LED NO.
5110F1	RED	4303F1
(P) 5110F1-12V	RED	4302F1-12V
5110F3	AMBER	4303F3
5110F5	GREEN	4303F5
5110F7	YELLOW	4303F7
5110F1LC	RED	4300F1LC
5110F5LC	GREEN	4300F5LC
5110F7LC	YELLOW	4300F7LC
5110F1-5V	RED	4302F1-5V
(M) 5110F3-5V	AMBER	4302F3-5V
5110F3-12V	YELLOW	4302F3-12V
(N) 5110F5-5V	GREEN	4302F5-5V
5110F5-12V	GREEN	4302F5-12V
5110F6	BLUE	CMD264-UBD
5110F1/5	RED/GRN	4301F1/5-A

REV	ECR NO./DESCRIPTION	DATE
M	21483 RHW REDRAWN IN CAD. ADDED MODEL NO. 5110F3-12V. DWG. NO. WAS A7757.	04/05/02
N	21737 RHW ADDED MODEL NO. 5110F5-12V.	06/12/02
P	22883 RHW ADDED MODEL NO. 5110F1-12V.	10/06/03

IDI INTERNACIONAL S.A.

PLANOS ORIGINALES

ORIGINAL
WHEN RED

NOTES:
1. MOUNTING HOLE .155/.158 (3.94/4.01) DIA. IN PANELS .031/.062 (.79/1.58) THICK.

DO NOT SCALE

THIS DWG IS THE PROPERTY OF CHICAGO MINIATURE LAMP INC. AND IS PROPRIETARY IN GENERAL AND IN DETAIL. IT SHALL NOT BE COPIED OR ITS CONTENTS REVEALED TO OUTSIDE PARTIES WITHOUT THE WRITTEN CONSENT OF CHICAGO MINIATURE LAMP INC.

(Q) FOR INSPECTION USE ONLY
(X) SPC DOCUMENTATION REQ. (X R CHARTS)

OCT 10 2003

DIST. C

PART NO. SEE TABLE
MODEL NO.
MOLD NO.
MATERIAL:
FINISH:
TOLERANCE UNLESS OTHERWISE SPECIFIED:
FRACTION ± 1/64
INCHES .xx ±.010 (0.25)
.xxx ±.010 (0.25)
ANGLE ± 1 deg.

TITLE
GLO-DOT 5110 SERIES
INDICATOR LIGHT

CHICAGO MINIATURE LAMP INC.
147 CENTRAL AVE. HACKENSACK, NJ 07601

DRAWN R.H. Wiggins
CHECKED 10/6/03
ENG. APPRV

SCALE: NONE
B7757 REV P

SHEET 1 OF 1