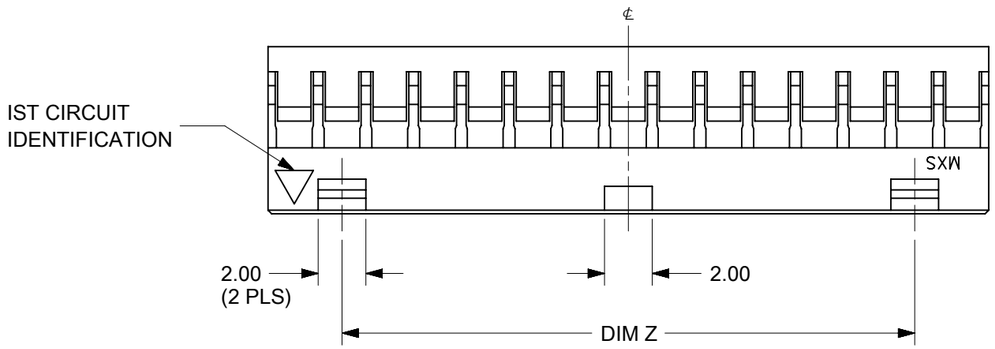

NOTES:
1. MATERIAL: GLASS-FILLED POLYESTER UL RATED 94V-0
   COLOR: BLACK
2. PART TO BE USED WITH CRIMP TERMINAL
   PART NUMBER 50394-8*** AND 87396-****
3. APPLICABLE WIRE RANGE:
   FOR 50394 SERIES, AWG #24 - #30,
   FOR 87396 SERIES, AWG #22 - #28.
4. WIRE INSULATION RANGE: DIAMETER 1.40MM MAXIMUM.
5. 30 CKT SHOWN FOR ILLUSTRATION ONLY.
6. MATES WITH: 87758, 87759, 87760, 87831, 87832, 151013, 151117, 151118, 151119, 151120 & 87833.

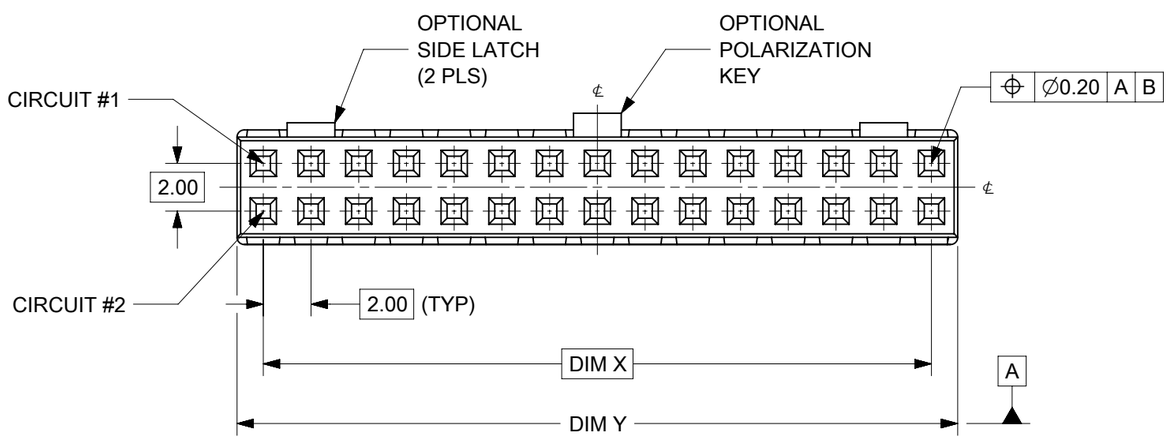

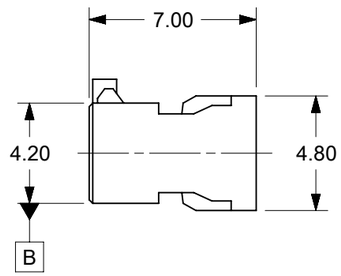

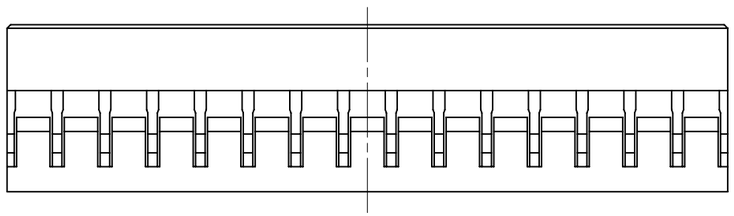

THIS DRAWING CONTAINS INFORMATION THAT IS PROPRIETARY TO MOLEX ELECTRONIC TECHNOLOGIES, LLC AND SHOULD NOT BE USED WITHOUT WRITTEN PERMISSION

DIMENSION UNITS	SCALE
mm	NTS

GENERAL TOLERANCES (UNLESS SPECIFIED)

ANGULAR TOL	± 3.0 °
4 PLACES	±
3 PLACES	±
2 PLACES	± 0.2
1 PLACE	±
0 PLACES	±

DRAFT WHERE APPLICABLE MUST REMAIN WITHIN DIMENSIONS

CURRENT REV DESC: REMOVED OBSOLETED PART NUMBER AS PER PCN #517549

EC NO:	839452	
DRWN:	PRANAA	2025/11/04
CHK'D:	GGA	2025/11/21
APPR:	GGA	2025/11/21

INITIAL REVISION:

DRWN:	SKTOH	1993/10/26
APPR:	LBLEE	2014/07/22

THIRD ANGLE PROJECTION | DRAWING: B-SIZE | SERIES: 51110

molex

2MM GRID, WIRE TO BOARD
CONNECTOR, CRIMP RECEPT. HOUSING

PRODUCT CUSTOMER DRAWING

DOCUMENT NUMBER	DOC TYPE	DOC PART	REVISION
SD-51110-XX5X	PSD	001	B12

MATERIAL NUMBER	CUSTOMER	SHEET NUMBER
SEE TABLE	GENERAL MARKET	1 OF 2

DOCUMENT STATUS	P1	RELEASE DATE	2025/11/21 08:28:36

FORMAT: master-lb-prod-B
REVISION: J1
DATE: 2021/05/01

WITHOUT CENTER POLARIZATION KEY & SIDE LATCHES

PART NUMBER	CKT SIZE	DIM X	DIM Y
51110-0450	4	2.00	4.20
51110-0650	6	4.00	6.20
51110-0850	8	6.00	8.20
51110-1050	10	8.00	10.20
51110-1250	12	10.00	12.20
51110-1450	14	12.00	14.20
51110-1650	16	14.00	16.20
51110-1850	18	16.00	18.20
51110-2050	20	18.00	20.20
51110-2250	22	20.00	22.20
51110-2450	24	22.00	24.20
51110-2650	26	24.00	26.20
51110-3050	30	28.00	30.20
51110-3450	34	32.00	34.20

WITH CENTER POLARIZATION KEY & SIDE LATCHES

PART NUMBER	CKT SIZE	DIM X	DIM Y	DIM Z
51110-1451	14	12.00	14.20	8.00
51110-1651	16	14.00	16.20	10.00
51110-1851	18	16.00	18.20	12.00
51110-2051	20	18.00	20.20	14.00
51110-2251	22	20.00	22.20	16.00
51110-2451	24	22.00	24.20	18.00
51110-2651	26	24.00	26.20	20.00
51110-2851	28	26.00	28.20	22.00
51110-3051	30	28.00	30.20	24.00
51110-3251	32	30.00	32.20	26.00
51110-3451	34	32.00	34.20	28.00

WITH CENTER POLARIZATION KEY

PART NUMBER	CKT SIZE	DIM X	DIM Y
51110-0452	4	2.00	4.20
51110-0652	6	4.00	6.20
51110-0851	8	6.00	8.20
51110-1051	10	8.00	10.20
51110-1251	12	10.00	12.20
51110-1452	14	12.00	14.20
51110-1652	16	14.00	16.20
51110-2052	20	18.00	20.20
51110-2252	22	20.00	22.20

PART NUMBER LEGEND:

51110 - * * 5 *

CIRCUIT SIZE

0 - WITHOUT CENTER POLARIZATION KEY AND SIDE LATCH.

1 - WITH CENTER POLARIZATION KEY AND SIDE LATCH. (14 TO 34 CIRCUITS ONLY) WITH CENTER POLARIZATION KEY ONLY. (8 TO 12 CIRCUITS ONLY)

2 - WITH CENTER POLARIZATION KEY ONLY. (4 TO 6 CIRCUITS AND 14 TO 22 CIRCUITS ONLY)

THIS DRAWING CONTAINS INFORMATION THAT IS PROPRIETARY TO MOLEX ELECTRONIC TECHNOLOGIES, LLC AND SHOULD NOT BE USED WITHOUT WRITTEN PERMISSION

DIMENSION UNITS	SCALE
mm	NTS

GENERAL TOLERANCES (UNLESS SPECIFIED)

ANGULAR TOL	± 3.0 °
4 PLACES	±
3 PLACES	±
2 PLACES	± 0.2
1 PLACE	±
0 PLACES	±

DRAFT WHERE APPLICABLE MUST REMAIN WITHIN DIMENSIONS

CURRENT REV DESC: REMOVED OBSOLETED PART NUMBER AS PER PCN #517549

EC NO: 839452
DRWN: PRANAA 2025/11/04
CHK'D: GGA 2025/11/21
APPR: GGA 2025/11/21

INITIAL REVISION:
DRWN: SKTOH 1993/10/26
APPR: LBLEE 2014/07/22

molex

2MM GRID, WIRE TO BOARD CONNECTOR, CRIMP RECEPT. HOUSING

PRODUCT CUSTOMER DRAWING

DOCUMENT NUMBER	DOC TYPE	DOC PART	REVISION
SD-51110-XX5X	PSD	001	B12

THIRD ANGLE PROJECTION	DRAWING	SERIES	MATERIAL NUMBER	CUSTOMER	SHEET NUMBER
	A3-SIZE	51110	SEE TABLE	GENERAL MARKET	2 OF 2

DOCUMENT STATUS	P1	RELEASE DATE	2025/11/21 08:28:36

FORMAT: master-tb-prod-A3
REVISION: J1
DATE: 2021/05/01