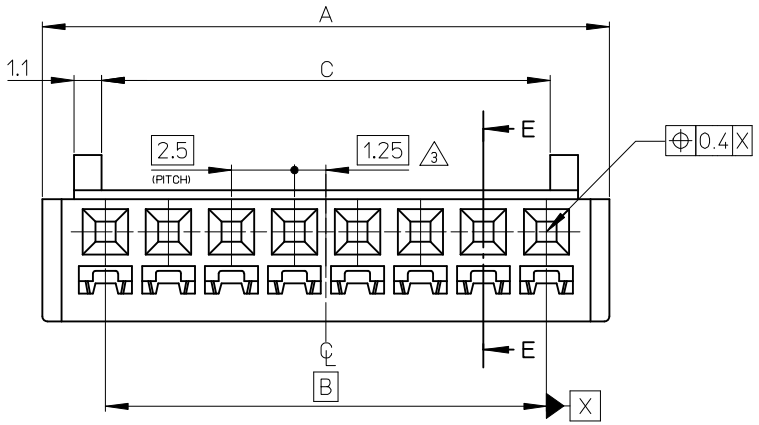

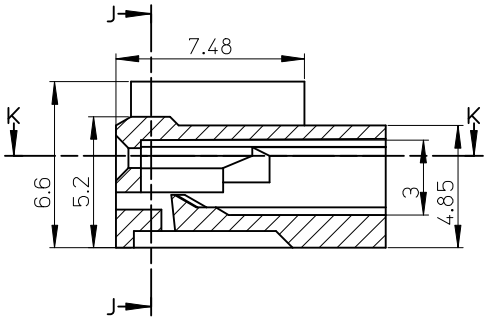

断面 E-E
SECTION E-E

NOTES:
1. 適合ターミナル：50802-****
APPLICABLE TERMINAL：50802-****
2. 嵌合相手：5045,5046,5240シリーズ
MATE WITH：5045,5046,5240 SERIES
△3 偶数極の製品に適用
APPLY EVEN CIRCUITS PRODUCTS

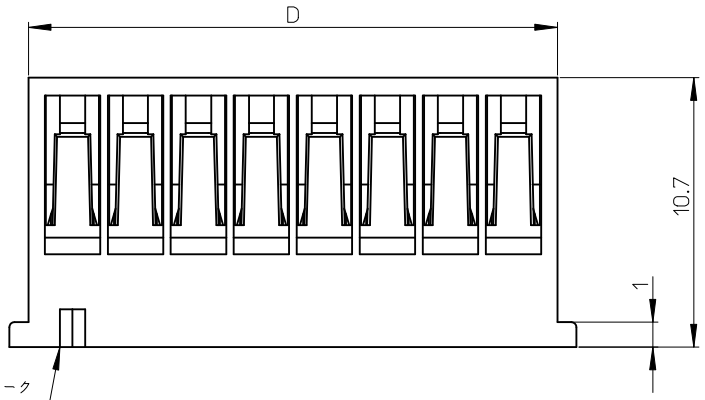

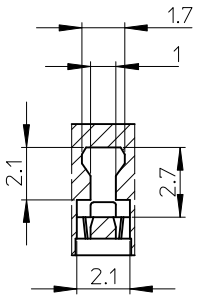

断面 J-J
SECTION J-J

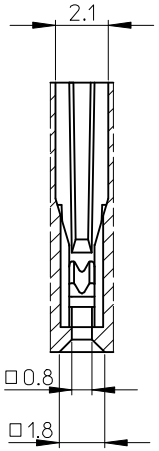

断面 K-K
SECTION K-K

回路番号1マーク
CKT.NO.1MARK

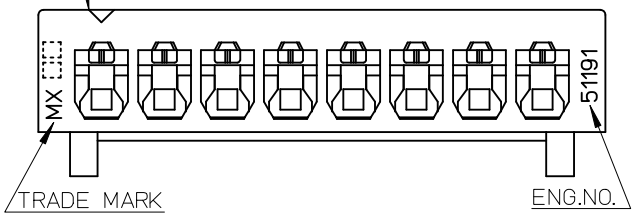

41	37.8	37.5	42.5	51191-1600	16
38.5	35.3	35	40	51191-1500	15
36	32.8	32.5	37.5	51191-1400	14
33.5	30.3	30	35	51191-1300	13
31	27.8	27.5	32.5	51191-1200	12
28.5	25.3	25	30	51191-1100	11
26	22.8	22.5	27.5	51191-1000	10
23.5	20.3	20	25	51191-0900	9
21	17.8	17.5	22.5	51191-0800	8
18.5	15.3	15	20	51191-0700	7
16	12.8	12.5	17.5	51191-0600	6
13.5	10.3	10	15	51191-0500	5
11	7.8	7.5	12.5	51191-0400	4
8.5	5.3	5	10	51191-0300	3
6	2.8	2.5	7.5	51191-0200	2
D	C	B	A	MATERIAL NO.	CKT.
51191-**00				MODEL NO.	

材料 MATERIAL: NYLON66.UL94V-0
仕上げ FINISH
適用電線範囲 WIRE RANGE
被覆外径 INS. RANGE

REVISED
EC NO: J2009-1227 2008/12/19
DRWN:YOSHIDAM 2008/12/19
CH'KD:THARUYAMA 2009/01/16
APPR:NUKITA
DESCRIPTION
REV

GENERAL TOLERANCES (UNLESS SPECIFIED)

10 UNDER	±0.2
10 OVER 30 UNDER	±0.25
30 OVER	±0.3
ANGULAR	±--- °

DRAFT WHERE APPLICABLE MUST REMAIN WITHIN DIMENSIONS

DIMENSION STYLE: MM ONLY
SCALE: 5:1
DESIGN UNITS: METRIC
THIRD ANGLE PROJECTION

DRAWN BY: S.MATSUZAKI DATE: 1998/04/09
CHECKED BY: S.KUNISHI DATE: 1998/04/10
APPROVED BY: M.FUKUSHIMA DATE: 1998/04/10

TITLE: 2.5 WIRE TO BOARD CONN. HOUSING

MOLEX INCORPORATED

MATERIAL NO.: SEE TABLE
DOCUMENT NO.: SD-51191-004
SHEET NO.: 1 OF 1

SIZE A3

THIS DRAWING CONTAINS INFORMATION THAT IS PROPRIETARY TO MOLEX INCORPORATED AND SHOULD NOT BE USED WITHOUT WRITTEN PERMISSION