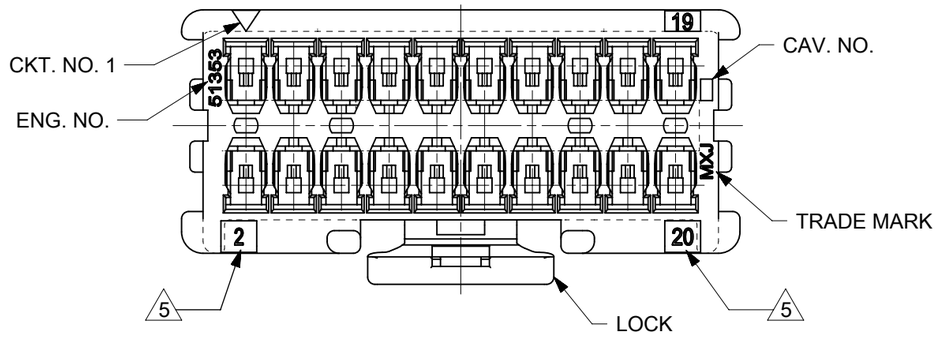

NOTES :
1. APPLICABLE TERMINAL : SERIES 56134, 59370
2. MATE WITH : SERIES 55917, 55959
3. APPLY FOR (CIRCUIT/2)=EVEN
4. MATERIAL NO.

51353-**0*

CIRCUIT SIZE — COLOR

NATURAL(WHITE)	0
BLACK	1
RED	2
YELLOW	3
BLUE	4
GREEN	6
BROWN	7
ORANGE	8

5. LOCK SIDE CKT.NO. DIDN'T INDICATED 8~14CKT, INDICATE 16~40CKT.
6. MATERIAL : 66 NYLON, UL94V-0

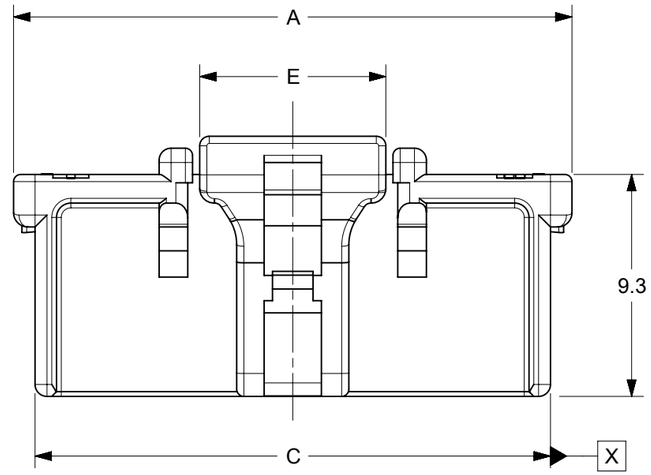

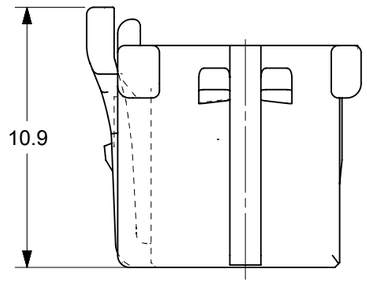

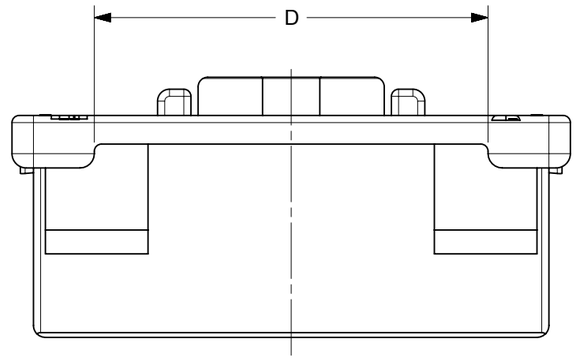

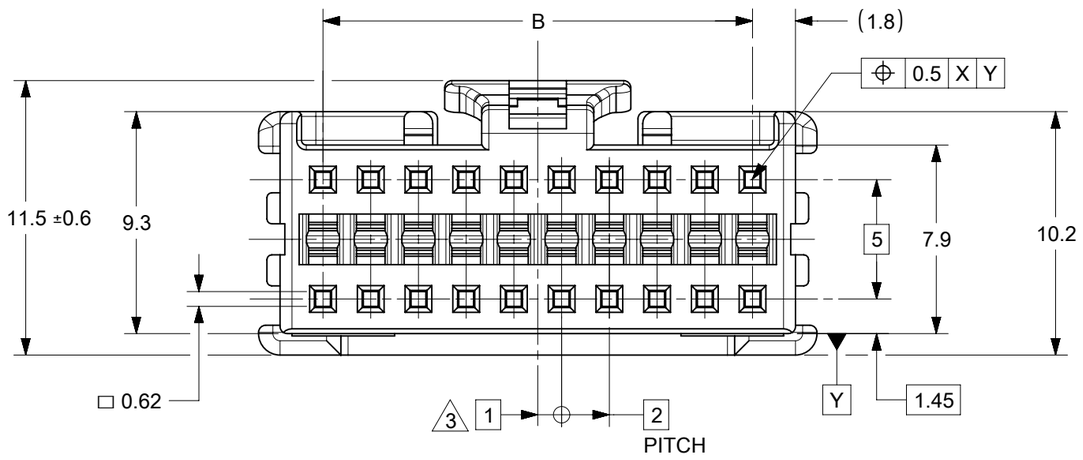

THIS DRAWING CONTAINS INFORMATION THAT IS PROPRIETARY TO MOLEX ELECTRONIC TECHNOLOGIES, LLC AND SHOULD NOT BE USED WITHOUT WRITTEN PERMISSION

DIMENSION UNITS	mm
SCALE	NTS

GENERAL TOLERANCES (UNLESS SPECIFIED)

ANGULAR TOL	±	3.0 °
4 PLACES	±	
3 PLACES	±	
2 PLACES	±	0.2
1 PLACE	±	0.2
0 PLACES	±	0.2

DRAFT WHERE APPLICABLE MUST REMAIN WITHIN DIMENSIONS

CURRENT REV DESC: OBSOLETED PART NUMBERS AS PER PCN#512131 AND REPLACED 513530800 001 PDM WITH 513530800 002 PDM.

EC NO: 727779
DRWN: ANIKES1 2022/11/07
CHK'D: GGA 2022/11/29
APPR: GGA 2022/11/29

INITIAL REVISION:
DRWN: N.ITO 2001/12/17
APPR: T.YAMAGUCHI 2002/10/22

THIRD ANGLE PROJECTION | DRAWING: B-SIZE | SERIES: 51353

molex

MICROCLASP 2.0 W-B CONN.
DUAL ROW RCPT HSG

PRODUCT CUSTOMER DRAWING

DOCUMENT NUMBER	DOC TYPE	DOC PART	REVISION
SD-51353-002	PSD	001	D1

MATERIAL NUMBER	CUSTOMER	SHEET NUMBER
SEE TABLE	GENERAL MARKET	1 OF 2

DOCUMENT STATUS	P1	RELEASE DATE	2022/11/29 12:45:26

FORMAT: master-tb-prod-B
REVISION: J1
DATE: 2021/05/01

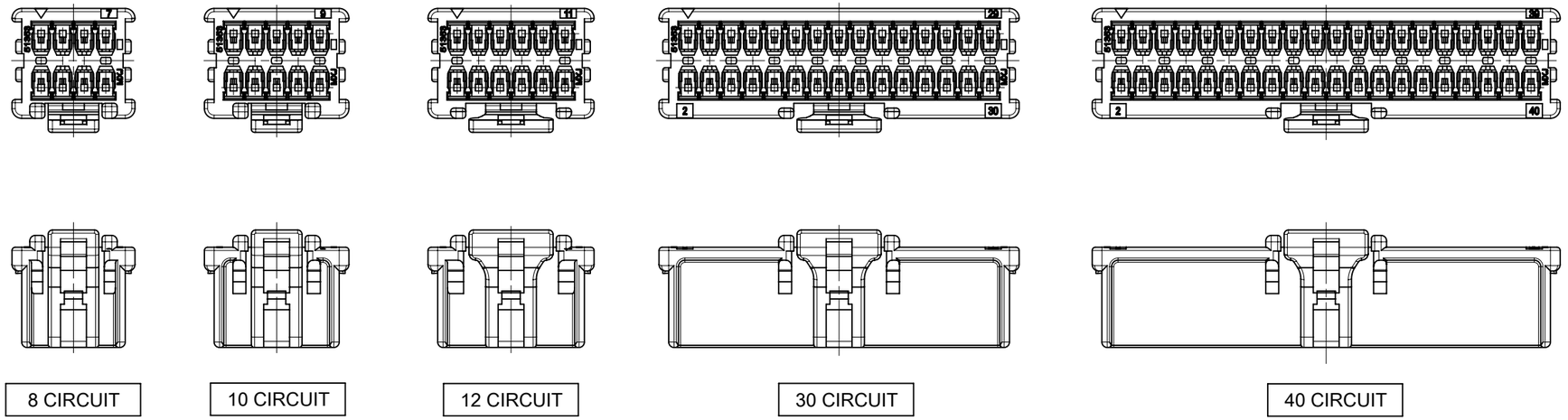

VIEW OF 8,10,12,30,40 CIRCUIT
(2:1)

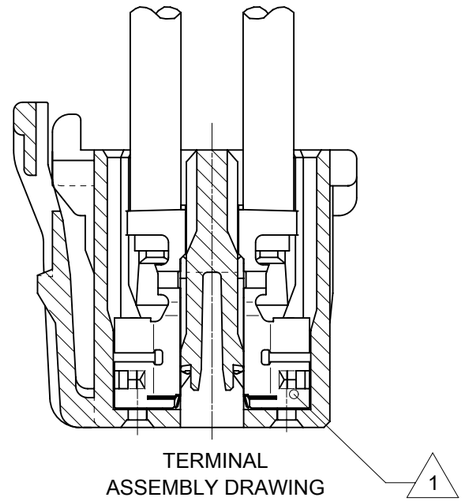

TERMINAL
ASSEMBLY DRAWING
SCALE 5:1

CKT.	4 MATERIAL NO.	A	B	C	D	E
40	51353-400*	43.4	38	41.6	36.5	7.8
38	51353-380*	41.4	36	39.6	34.5	7.8
36	51353-360*	39.4	34	37.6	32.5	7.8
34	51353-340*	37.4	32	35.6	30.5	7.8
32	51353-320*	35.4	30	33.6	28.5	7.8
30	51353-300*	33.4	28	31.6	26.5	7.8
28	51353-280*	31.4	26	29.6	24.5	7.8
26	51353-260*	29.4	24	27.6	22.5	7.8
24	51353-240*	27.4	22	25.6	20.5	7.8
22	51353-220*	25.4	20	23.6	18.5	7.8
20	51353-200*	23.4	18	21.6	16.5	7.8
18	51353-180*	21.4	16	19.6	14.5	7.8
16	51353-160*	19.4	14	17.6	12.5	7.8
14	51353-140*	17.4	12	15.6	10.5	7.8
12	51353-120*	15.4	10	13.6	8.5	7.8
10	51353-100*	13.4	8	11.6	6.5	4.7
8	51353-080*	11.4	6	9.6	4.5	4.7

DOCUMENT STATUS | P1 | RELEASE DATE | 2022/11/29 12:45:26

THIS DRAWING CONTAINS INFORMATION THAT IS PROPRIETARY TO MOLEX ELECTRONIC TECHNOLOGIES, LLC AND SHOULD NOT BE USED WITHOUT WRITTEN PERMISSION

DIMENSION UNITS: mm | SCALE: NTS

GENERAL TOLERANCES (UNLESS SPECIFIED)

ANGULAR TOL	± 3.0 °
4 PLACES	±
3 PLACES	±
2 PLACES	± 0.2
1 PLACE	± 0.2
0 PLACES	± 0.2

DRAFT WHERE APPLICABLE MUST REMAIN WITHIN DIMENSIONS

CURRENT REV DESC: OBSOLETED PART NUMBERS AS PER PCN#512131 AND REPLACED 513530800 001 PDM WITH 513530800 002 PDM.

EC NO: 727779
DRWN: ANIKES1 2022/11/07
CHK'D: GGA 2022/11/29
APPR: GGA 2022/11/29

INITIAL REVISION:
DRWN: N.ITO 2001/12/17
APPR: T.YAMAMGUCHI 2002/10/22

THIRD ANGLE PROJECTION | DRAWING: B-SIZE | SERIES: 51353

molex

MICROCLASP 2.0 W-B CONN.
DUAL ROW RCPT HSG

PRODUCT CUSTOMER DRAWING

DOCUMENT NUMBER	DOC TYPE	DOC PART	REVISION
SD-51353-002	PSD	001	D1

MATERIAL NUMBER	CUSTOMER	SHEET NUMBER
SEE TABLE	GENERAL MARKET	2 OF 2

FORMAT: master-tb-prod-B
REVISION: J1
DATE: 2021/05/01