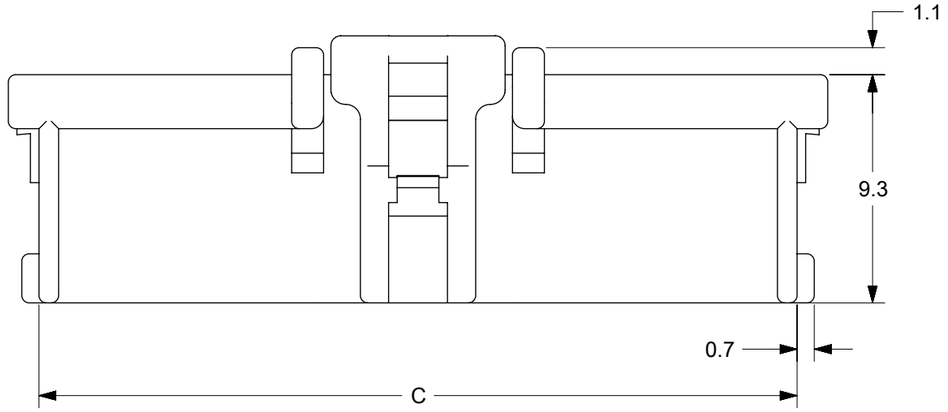

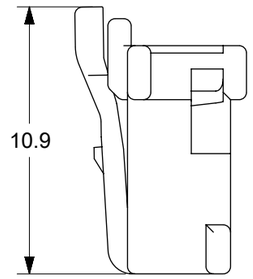

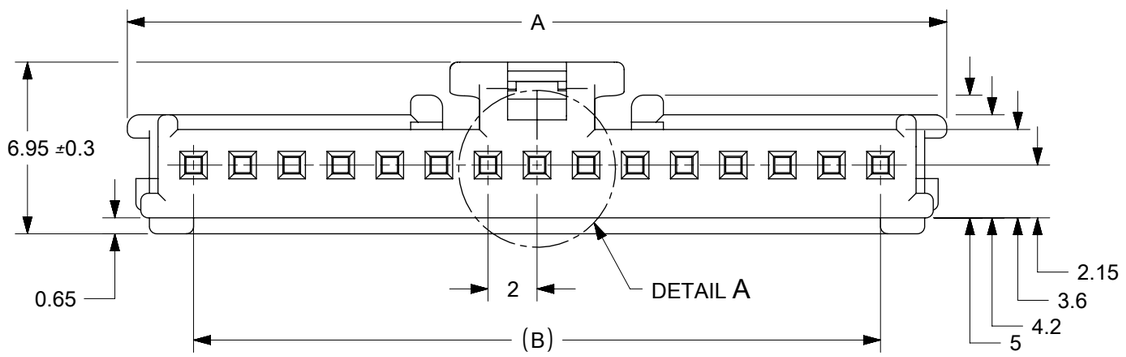

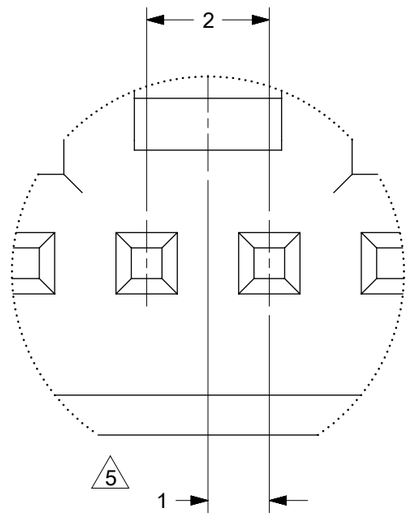

DETAIL A
SCALE 10:1

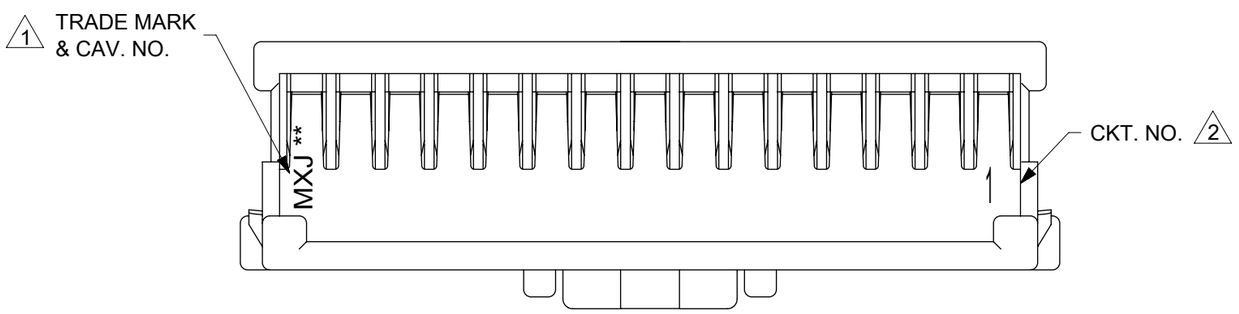

NOTES
1. SIZE OF LETTERS 0.7 AND CLEAR.
2. SIZE OF LETTERS 1 AND CLEAR
3. APPLICABLE TERM. : 59370,56134 SERIES.
4. MATE WITH : 55932,55935 SERIES.
5. APPLY EVEN CIRCUIT
6. MATERIAL : 66NYLON, UL94V-0
7. MATERIAL NO.

51382- X X X X
CKT — COLOR

NATURAL (WHITE)	00
BLACK	01
RED	02
YELLOW	03
BLUE	04
PINK	05
GREEN	06
BROWN	07
ORANGE	08
VIOLET	09
GRAY	11
FLUORESCENCE YELLOW	13
PALE BLUE	14
(H2) ~~YELLOWISH GREEN~~ VO	~~16~~

CKT	MATERIAL NO.	A	B	C
2	51382-02XX	7.4	2	4.9
3	51382-03XX	9.4	4	6.9
4	51382-04XX	11.4	6	8.9
5	51382-05XX	13.4	8	10.9
6	51382-06XX	15.4	10	12.9
7	51382-07XX	17.4	12	14.9
8	51382-08XX	19.4	14	16.9
9	51382-09XX	21.4	16	18.9
10	51382-10XX	23.4	18	20.9
11	51382-11XX	25.4	20	22.9
12	51382-12XX	27.4	22	24.9
13	51382-13XX	29.4	24	26.9
14	51382-14XX	31.4	26	28.9
15	51382-15XX	33.4	28	30.9

THIS DRAWING CONTAINS INFORMATION THAT IS PROPRIETARY TO MOLEX ELECTRONIC TECHNOLOGIES, LLC AND SHOULD NOT BE USED WITHOUT WRITTEN PERMISSION

FUNCTIONAL SYMBOLS
FA = 0
FC = 0
FB = 0
DIVISIONAL SYMBOLS

DIMENSION UNITS | SCALE 4:1

GENERAL TOLERANCES (UNLESS SPECIFIED)

ANGULAR TOL	± 3.0 °
4 PLACES	±
3 PLACES	±
2 PLACES	± 0.2
1 PLACE	± 0.2
0 PLACES	± 0.2

DRAFT WHERE APPLICABLE MUST REMAIN WITHIN DIMENSIONS

CURRENT REV DESC:

EC NO: 800553
DRWN: VKAMAK 2024/10/07
CHK'D: ISHWARG 2024/10/08
APPR: ISHWARG 2024/10/08

INITIAL REVISION:
DRWN: TNIITSU 2002/02/18
APPR: KASAKAWA 2002/02/20

THIRD ANGLE PROJECTION | DRAWING: A3-SIZE | SERIES: 51382

molex

2.0 W/B CONN. HOUSING

PRODUCT CUSTOMER DRAWING

DOCUMENT NUMBER	DOC TYPE	DOC PART	REVISION
SD-51382-002	PSD	001	H3

MATERIAL NUMBER	CUSTOMER	SHEET NUMBER
SEE TABLE	GENERAL MARKET	1 OF 2

DOCUMENT STATUS	P1	RELEASE DATE	2024/10/08 12:34:14

FORMAT: master-lb-prod-A3
REVISION: J
DATE: 2020/01/14

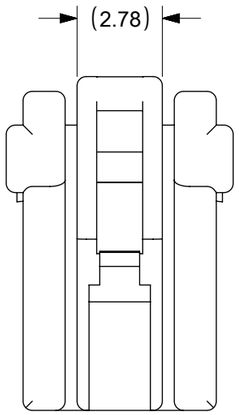

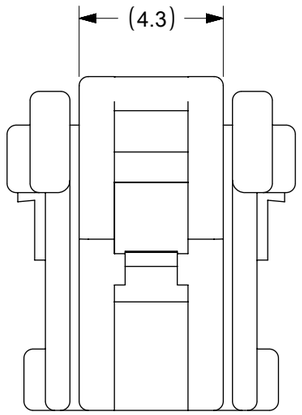

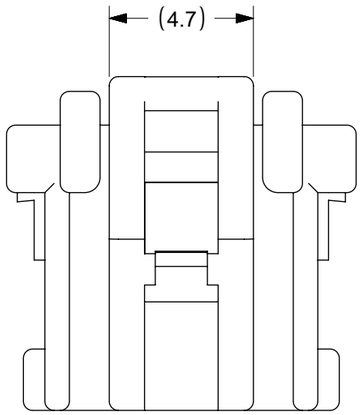

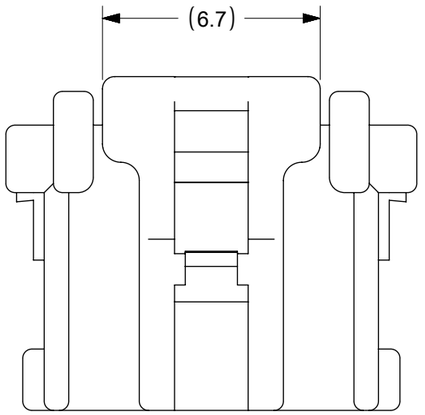

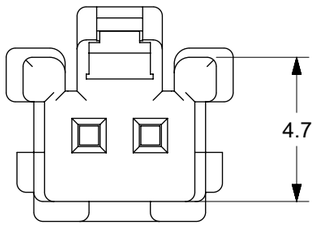

2 CIRCUIT

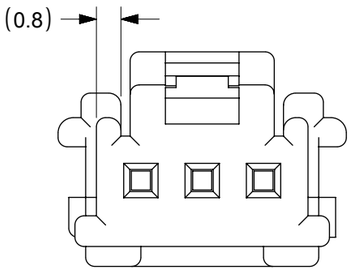

3 CIRCUIT

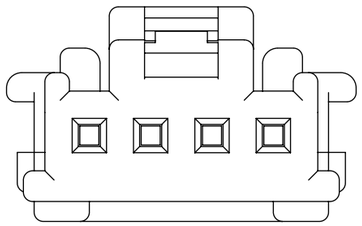

4 CIRCUIT

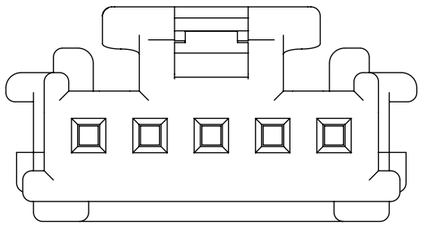

5 CIRCUIT

THIS DRAWING CONTAINS INFORMATION THAT IS PROPRIETARY TO MOLEX ELECTRONIC TECHNOLOGIES, LLC AND SHOULD NOT BE USED WITHOUT WRITTEN PERMISSION

FUNCTIONAL SYMBOLS	FA = 0, FC = 0, FD = 0
DIVISIONAL SYMBOLS	
DIMENSION UNITS	
SCALE	5:1
GENERAL TOLERANCES (UNLESS SPECIFIED)	
ANGULAR TOL	± 3.0 °
4 PLACES	±
3 PLACES	±
2 PLACES	± 0.2
1 PLACE	± 0.2
0 PLACES	± 0.2
DRAFT WHERE APPLICABLE MUST REMAIN WITHIN DIMENSIONS	

CURRENT REV DESC:

EC NO: 800553
DRWN: VKAMAK 2024/10/07
CHK'D: ISHWARG 2024/10/08
APPR: ISHWARG 2024/10/08

INITIAL REVISION:
DRWN: TNIITSU 2002/02/18
APPR: KASAKAWA 2002/02/20

THIRD ANGLE PROJECTION | DRAWING: A3-SIZE | SERIES: 51382

molex

2.0 W/B CONN. HOUSING

PRODUCT CUSTOMER DRAWING

DOCUMENT NUMBER	DOC TYPE	DOC PART	REVISION
SD-51382-002	PSD	001	H3

MATERIAL NUMBER	CUSTOMER	SHEET NUMBER
SEE SHEET 1	GENERAL MARKET	2 OF 2

DOCUMENT STATUS	P1	RELEASE DATE	2024/10/08 12:34:14

FORMAT: master-tb-prod-A3
REVISION: J
DATE: 2020/01/14