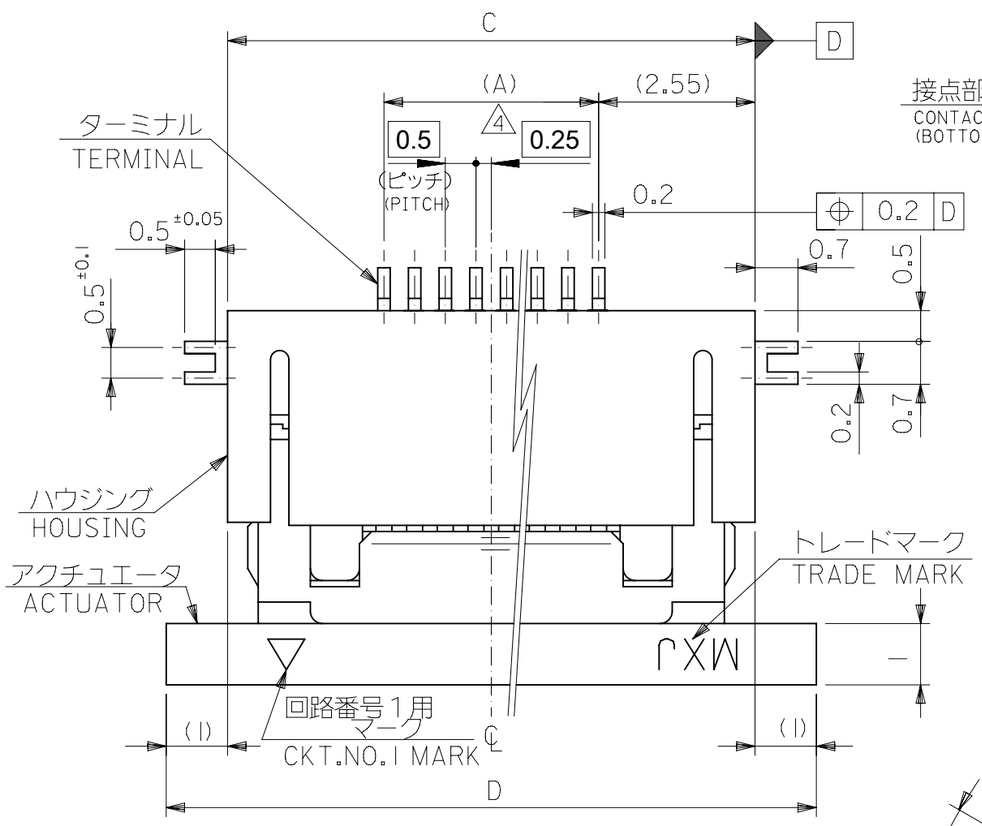

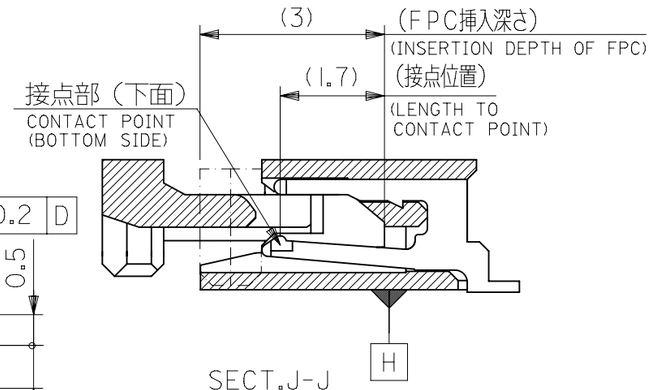

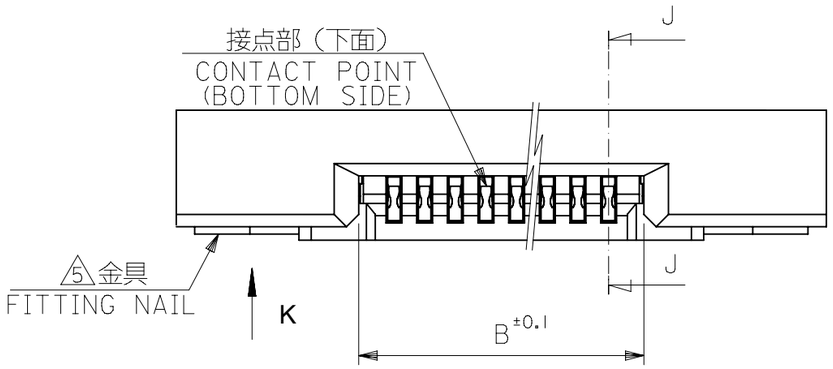

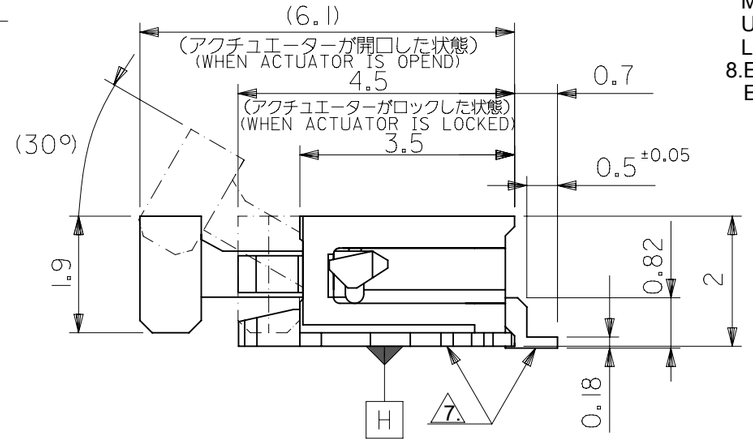

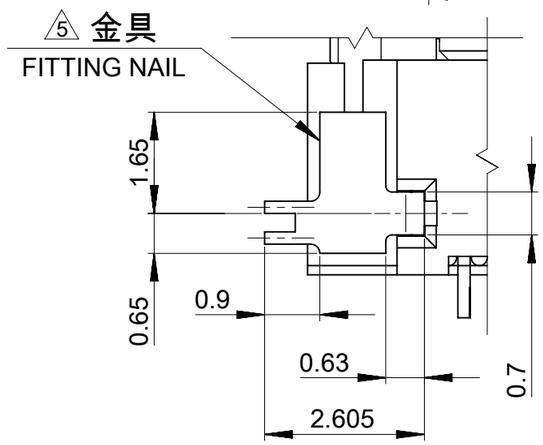

VIEW K
(金具部投影図)
(DETAIL OF FITTING NAIL)

NOTES

1.使用材料
MATERIAL
ハウジング：ポリアミド(PA) 、ナチュラル(白色)、ガラス充填、UL94V-0
HOUSING:POLYAMIDE NATURAL(WHITE)、GLASS FILLED,UL94V-0
アクチュエータ：ポリフェニレンサルファイド(PPS)、ナチュラル(茶色)、ガラス充填、UL94V-0
ACTUATOR: PPS ,NATURAL(BROWN), GLASS FILLED, UL94V-0
ターミナル：リン青銅(t = 0.2)
TERMINAL:PHOSPHOR BRONZE(t = 0.2)
金具：リン青銅(t = 0.2)
FITTING NAIL: PHOSPHOR BRONZE(t = 0.2)

2.メッキ仕様 PLATING
ターミナル TERMINAL
錫銀ビスマスメッキ (1.0μm以上)
TIN SILVER BISMUTH PLATING (1.0 MICROMETER MINIMUM)
下地メッキ：ニッケルメッキ (1.0μm以上)
UNDER PLATING : NICKEL PLATING (1.0 MICROMETER MINIMUM)
金具 NAIL
錫メッキ (1.0μm以上)
TIN PLATING (1.0 MICROMETER MINIMUM)
下地メッキ：ニッケルメッキ (1.0μm以上)
UNDER PLATING : NICKEL PLATING (1.0 MICROMETER MINIMUM)

3.エンボステープ梱包時は、アクチュエータがロックした状態になります。
IN THE PACKAGE,ACTUATOR OF PART NO.52437-**22 SHOULD BE LOCKED.

4 偶数極に適用
APPLY FOR EVEN CIRCUIT.

5 ﾊﾟﾀｰﾝ剥離止め金具
FITTING NAIL FOR PREVENTION OF PEELING OF P.W.B. PATTERN.

6 R0.3は、FPCの導体部にかからないこと
R0.3 MUST NOT BE OVERLAPED TO PATTERN OF FPC.

7 ソルダーテール半田付け面のズレ量、及び金具半田付け面のズレ量は、基準面 H に対して上方向に0.1MAXIMUM、下方向に0.15MAXIMUMとする。
MISALIGNMENT OF SOLDER TAILS AND FITTING NAILS FROM DATUM H.
UPPER DIRECTION : 0.1 MAXIMUM
LOWER DORECTION : 0.15MAXIMUM

8.ELV及びRoHS適合品
ELV AND RoHS COMPLIANT

D	C	B	(A)	EMBOSSED PACKAGE	極数
				ORDER No. オーダー番号	CKT.
17.1	15.1	11.15	10.0	52437-2133	21
17.6	15.6	11.65	10.5	52437-2233	22
18.1	16.1	12.15	11.0	52437-2333	23
18.6	16.6	12.65	11.5	52437-2433	24
19.1	17.1	13.15	12.0	52437-2533	25
19.6	17.6	13.65	12.5	52437-2633	26
20.1	18.1	14.15	13.0	52437-2733	27
20.6	18.6	14.65	13.5	52437-2833	28
21.1	19.1	15.15	14.0	52437-2933	29
21.6	19.6	15.65	14.5	52437-3033	30

CONNECTOR SERIES NO. : 52437-**22

GENERAL TOLERANCES (UNLESS SPECIFIED)	
10 UNDER	± 0.2
10 OVER 30 UNDER	± 0.25
30 OVER	± 0.3
ANGULAR ± 3 °	
DRAFT WHERE APPLICABLE MUST REMAIN WITHIN DIMENSIONS	

THIS DRAWING CONTAINS INFORMATION THAT IS PROPRIETARY TO MOLEX ELECTRONIC TECHNOLOGIES, LLC AND SHOULD NOT BE USED WITHOUT WRITTEN PERMISSION

DIMENSION UNITS: mm | SCALE: 10:1

GENERAL TOLERANCES (UNLESS SPECIFIED)	
ANGULAR TOL ±	±0 °
4 PLACES	± 0.2
3 PLACES	± 0.25
2 PLACES	± 0.3
1 PLACE	±
0 PLACES	±

DRAFT WHERE APPLICABLE MUST REMAIN WITHIN DIMENSIONS

CURRENT REV DESC: REMOVED OBSOLETED PART NUMBER AS PER PCN#512672.

EC NO: 724799
DRWN: SANTHN 2022/10/14
CHK'D: GGA 2022/11/03
APPR: GGA 2022/11/03

INITIAL REVISION:
DRWN: KMIYAHARA 2012/09/05
APPR: KMORIKAWA 2013/04/05

THIRD ANGLE PROJECTION | DRAWING: A3-SIZE | SERIES: 52437

molex

0.5MM FPC CONN ZIF R/A
HOUSING ASSY (LOWER CONTACT)

PRODUCT CUSTOMER DRAWING

DOCUMENT NUMBER	DOC TYPE	DOC PART	REVISION
SD-52437-023	PSD	001	A1

MATERIAL NUMBER	CUSTOMER	SHEET NUMBER
SEE TABLE	GENERAL MARKET	1 OF 2

DOCUMENT STATUS	P1	RELEASE DATE	2022/11/03 08:33:20

FORMAT: master-tb-prod-A3
REVISION: J1
DATE: 2021/05/01

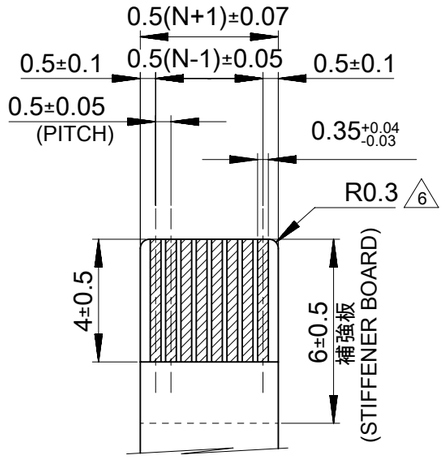

適合FPC推奨寸法

APPLICABLE FPC
PLATING RECOMMENDED DIMENSION

仕上がり厚さ：0.3±0.05
THICKNESS: 0.3+0.05/-0.05

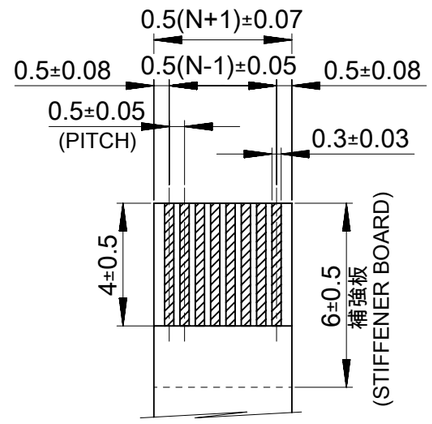

適合FFC推奨寸法

APPLICABLE FFC
PLATING RECOMMENDED DIMENSION

仕上がり厚さ：0.3±0.05
THICKNESS: 0.3+0.05/-0.05

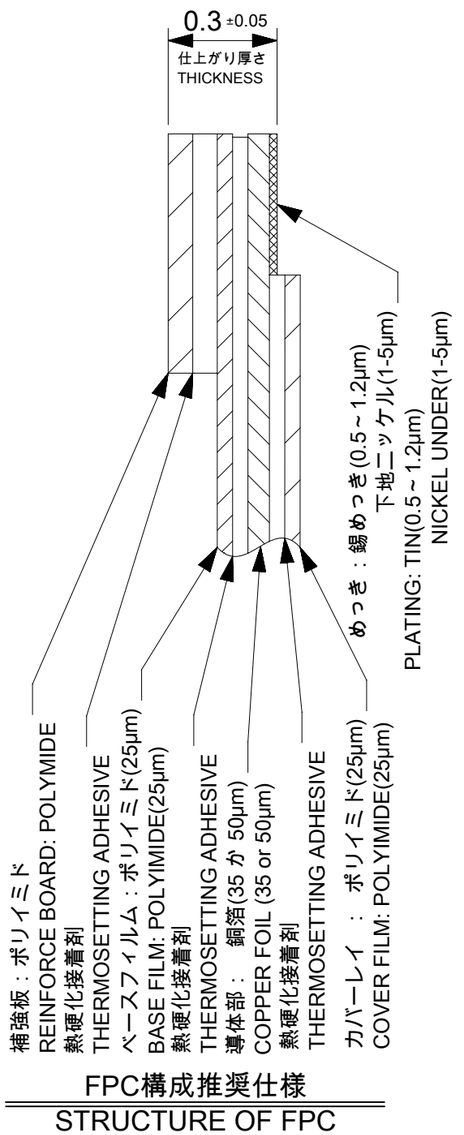

FPC構成推奨仕様

STRUCTURE OF FPC

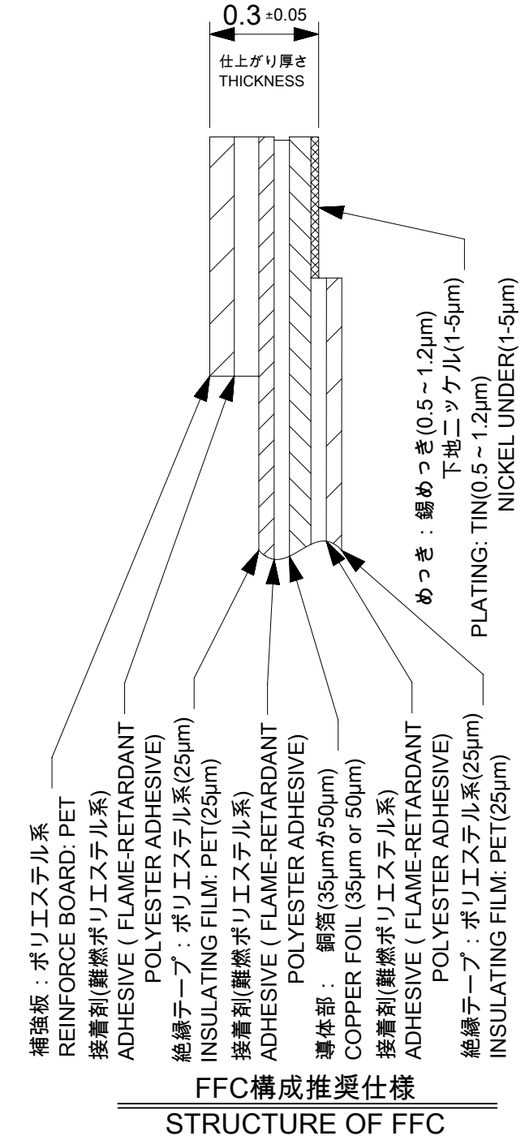

FFC構成推奨仕様

STRUCTURE OF FFC

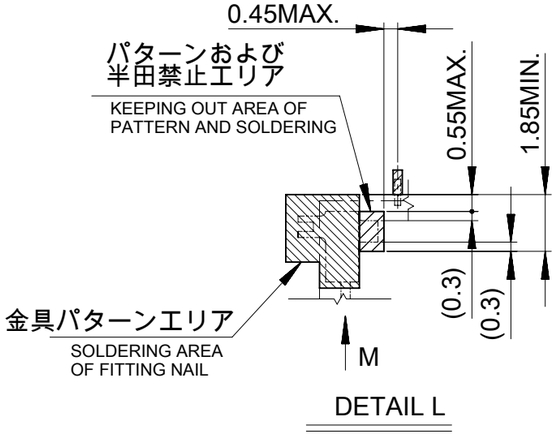

DETAIL L

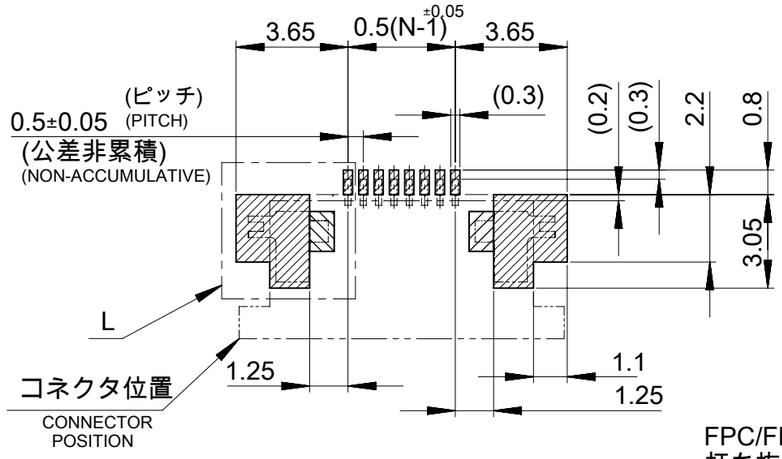

推奨基板レイアウト
（マウンド面）

RECOMMENDED P.C.BOARD
PATTERN DIMENSION
(MOUNTING SIDE)

FPC/FFCについて　ABOUT FPC/FFC

打ち抜き方向は導体側から補強板側を推奨します。
接着剤の接点部への付着は導通不良の原因になりますので、染み出しが無い様、お願い致します。
RECOMMENDED PUNCHING DIRECTION: FROM CONDUCTOR SIDE TO STIFFENER SIDE
PLEASE PUT APPROPRIATE AMOUNT OF ADHESIVE ON ADHEREND BECAUSE
THERE IS A POSSIBILITY THAT THE EXTRA ADHESIVE CAUSES THE DEFECT IN
ELECTRICAL CONTINUITY.

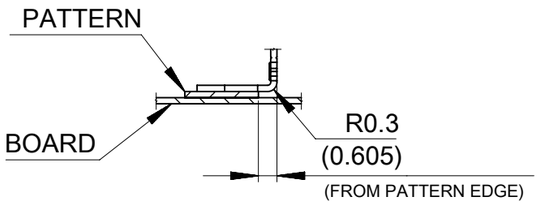

VIEW M

(DETAIL OF FITTING NAIL
ON PATTERN)

マスク厚　：　100μm
マスク開口率　：　100%
SCREEN THICKNESS : 100μm
SCREEN OPEN RATIO : 100%

GENERAL TOLERANCES (UNLESS SPECIFIED)	
10 UNDER	± 0.2
10 OVER 30 UNDER	± 0.25
30 OVER	± 0.3
ANGULAR ± 3 °	
DRAFT WHERE APPLICABLE MUST REMAIN WITHIN DIMENSIONS	

THIS DRAWING CONTAINS INFORMATION THAT IS PROPRIETARY TO MOLEX ELECTRONIC TECHNOLOGIES, LLC AND SHOULD NOT BE USED WITHOUT WRITTEN PERMISSION

DIMENSION UNITS	SCALE
mm	5:1

GENERAL TOLERANCES (UNLESS SPECIFIED)	
ANGULAR TOL	± 2.0 °
4 PLACES	± 0.2
3 PLACES	± 0.25
2 PLACES	± 0.3
1 PLACE	±
0 PLACES	±

DRAFT WHERE APPLICABLE MUST REMAIN WITHIN DIMENSIONS

CURRENT REV DESC: REMOVED OBSOLETED PART NUMBER AS PER PCN#512672.

EC NO: 724799
DRWN: SANTHN 2022/10/14
CHK'D: GGA 2022/11/03
APPR: GGA 2022/11/03

INITIAL REVISION:
DRWN: KMIYAHARA 2012/09/05
APPR: KMORIKAWA 2013/04/05

molex

0.5MM FPC CONN ZIF R/A
HOUSING ASSY (LOWER CONTACT)

PRODUCT CUSTOMER DRAWING

THIRD ANGLE PROJECTION	DRAWING	SERIES
	A3-SIZE	52437

DOCUMENT NUMBER	DOC TYPE	DOC PART	REVISION
SD-52437-023	PSD	001	A1

MATERIAL NUMBER	CUSTOMER	SHEET NUMBER
SEE TABLE	GENERAL MARKET	2 OF 2

DOCUMENT STATUS	P1	RELEASE DATE	2022/11/03 08:33:20

FORMAT: master-lb-prod-A3
REVISION: J1
DATE: 2021/05/01