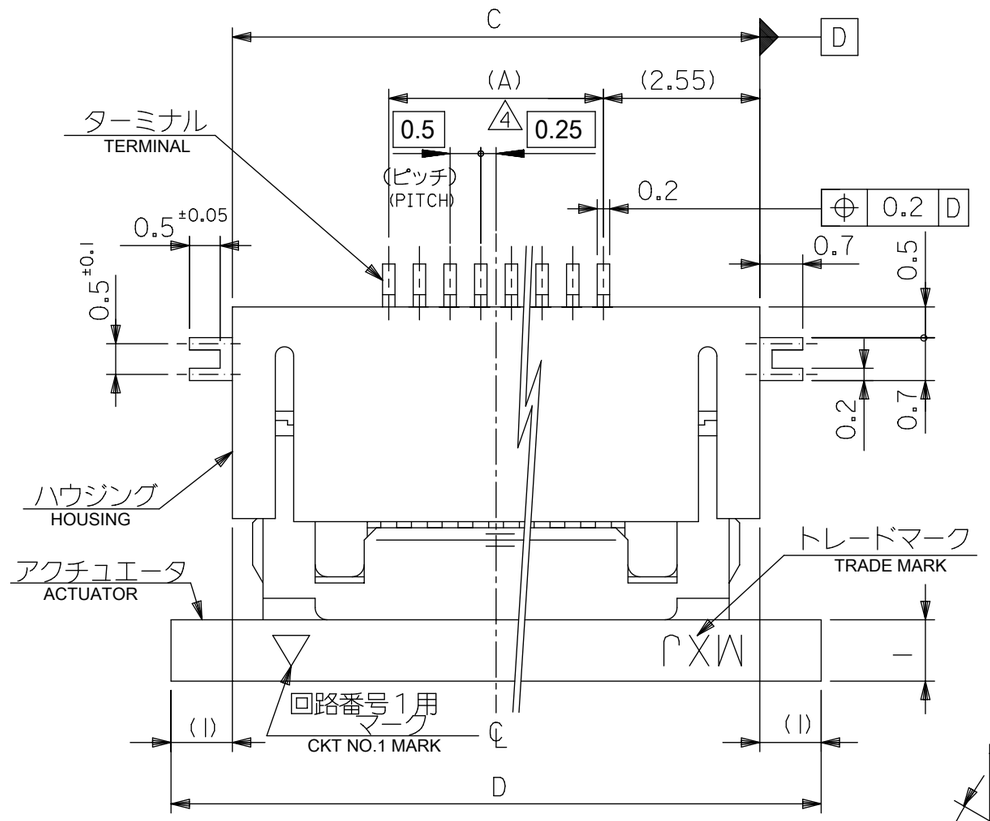

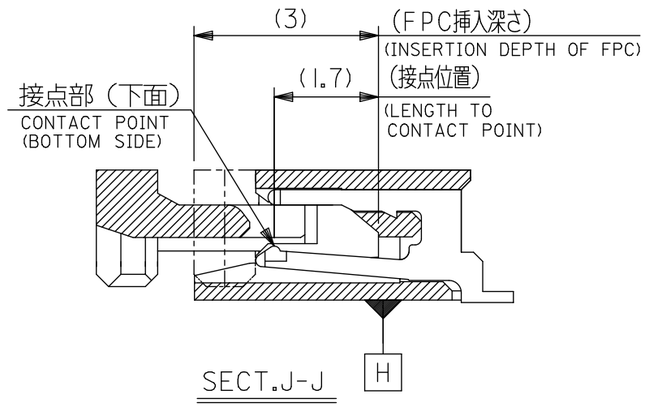

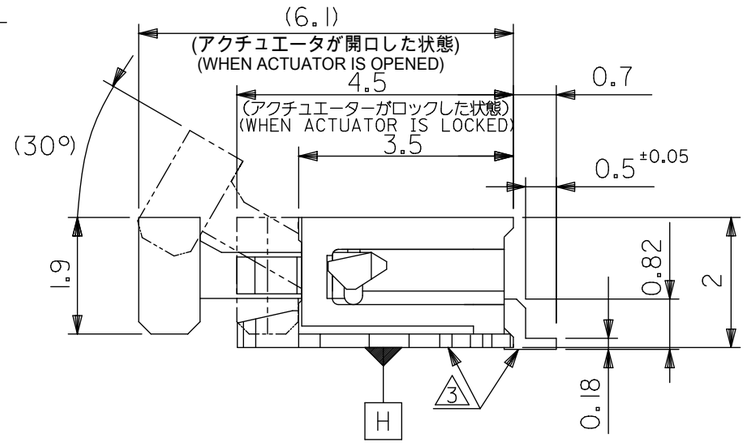

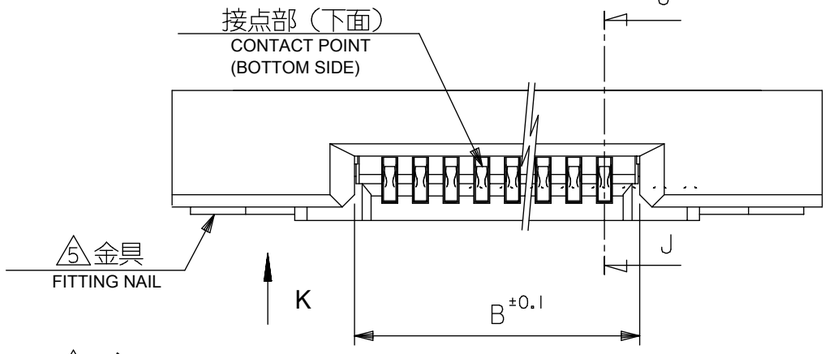

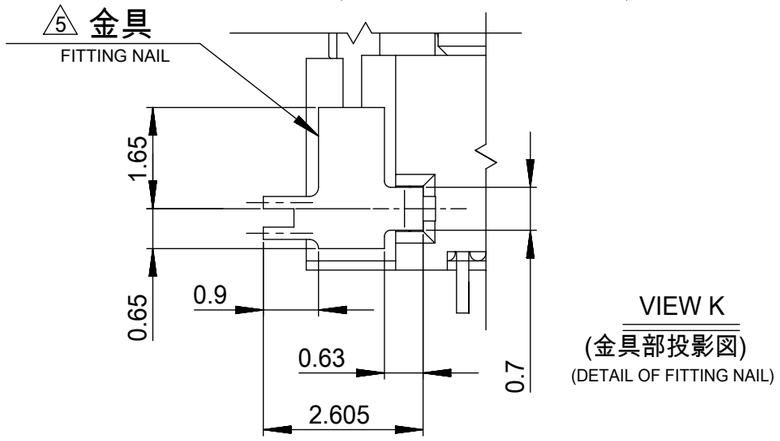

VIEW K
(金具部投影図)
(DETAIL OF FITTING NAIL)

注記NOTES
1.使用材料
MATERIAL
ハウジング：46ナイロン、ガラス充填、UL94V-0、白
HOUSING:PA46,GLASS FILLED,UL94V-0,WHITE
アクチュエータ：ポリフェニレンサルフィド（PPS）、ガラス充填、UL94V-0、茶色
ACTUATOR:POLYPHENYLENE SULFIDE,GLASS FILLED,UL94V-0,BROWN
ターミナル：リン青銅、ニッケル下地錫ビスマスめっき（t=0.2）
TERMINAL:PHOSPHOR BRONZE,TIN BISMUTH OVER NICKEL PLATING
金具：リン青銅、ニッケル下地錫めっき（t=0.2）
FITTING NAIL: PHOSPHOR BRONZE,TIN OVER NICKEL PLATING
2.エンボステープ梱包時は、アクチュエータがロックした状態になります。
IN THE PACKAGE,ACTUATOR OF PART NO.52437-**26 SHOULD BE LOCKED.
3 ソルダーテール半田付け面のズレ量、及び金具半田付け面のズレ量は、基準面Hに対して上方向に0.1MAXIMUM、下方向0.15MAXIMUMとする。
MISALIGNMENT OF SOLDER TAILS AND FITTING NAILS FROM DATUM-H.
UPPER DIRECTON:0.1MAXIMUM
LOWER DIRECTION:0.15 MAXIMUM
4 偶数極に適用
APPLY FOR EVEN CIRCUIT.
5 ﾊﾟﾀｰﾝ剥離止め金具
FITTING NAIL FOR PREVENTION OF PEELING OF P.W.B. PATTERN.
6 R0.3は、FPCの導体部にかからないこと
R0.3 MUST NOT BE OVERLAPED TO PATTERN OF FPC.
7.ソルダーテールの平坦度は、0.1MAXIMUMとする。
SOLDER TAIL COPLANARITY IS 0.1 MAXIMUM.
8.ELV 及び RoHS 適合品
ELV AND RoHS COMPLIANT

D	C	B	(A)	EMBOSSED PACKAGE	極数
				ORDER No. オーダー番号	CKT.
21.6	19.6	15.65	14.5	52437-3072	30
21.1	19.1	15.15	14.0	52437-2972	29
20.6	18.6	14.65	13.5	52437-2872	28
20.1	18.1	14.15	13.0	52437-2772	27
19.6	17.6	13.65	12.5	52437-2672	26
19.1	17.1	13.15	12.0	52437-2572	25
18.6	16.6	12.65	11.5	52437-2472	24
18.1	16.1	12.15	11.0	52437-2372	23
17.6	15.6	11.65	10.5	52437-2272	22
17.1	15.1	11.15	10.0	52437-2172	21

CONNECTOR SERIES NO. : 52437-**26

GENERAL TOLERANCES (UNLESS SPECIFIED)	
10^{UNDER}	±0.2
10^{OVER} 30^{UNDER}	±0.25
30^{OVER}	±0.3
ANGULAR	±3 °

THIS DRAWING CONTAINS INFORMATION THAT IS PROPRIETARY TO MOLEX ELECTRONIC TECHNOLOGIES, LLC AND SHOULD NOT BE USED WITHOUT WRITTEN PERMISSION

DIMENSION UNITS: mm
SCALE: NTS
GENERAL TOLERANCES (UNLESS SPECIFIED)
ANGULAR TOL ± °
4 PLACES ±
3 PLACES ±
2 PLACES ±
1 PLACE ±
0 PLACES ±
DRAFT WHERE APPLICABLE MUST REMAIN WITHIN DIMENSIONS

CURRENT REV DESC:
EC NO: 758488
DRWN: RAJMOK 2023/07/27
CHK'D: HSHIMOYAMA 2023/08/03
APPR: YNAITO 2023/08/03
INITIAL REVISION:
DRWN: YSAKIYAMA 2004/01/16
APPR: MSASAO 2004/01/19

molex

0.5 FPC CONN. ZIF FOR SMT R/A (BOTTOM CONTACT) TIN-BISMUTH PLATING

PRODUCT CUSTOMER DRAWING

DOCUMENT NUMBER	DOC TYPE	DOC PART	REVISION
SD-52437-017	PSD	001	G

THIRD ANGLE PROJECTION | DRAWING: A3-SIZE | SERIES: 52437

MATERIAL NUMBER	CUSTOMER	SHEET NUMBER
SEE TABLE	GENERAL MARKET	1 OF 2

DOCUMENT STATUS	P1	RELEASE DATE	2023/08/03 11:20:29

FORMAT: master-lb-prod-A3
REVISION: J1
DATE: 2021/05/01

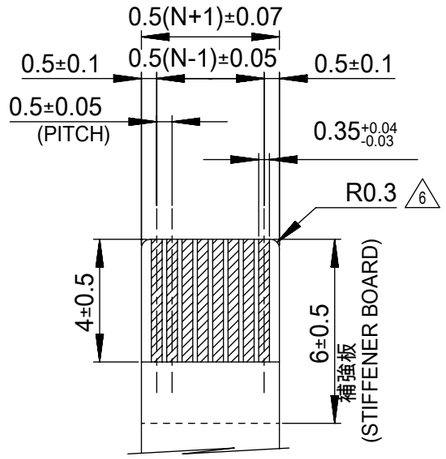

適合錫系めっきFPC推奨寸法

APPLICABLE FPC OF TIN PLATING RECOMMENDED DIMENSION

仕上がり厚さ：0.3±0.05

THICKNESS: 0.3+0.05/-0.05

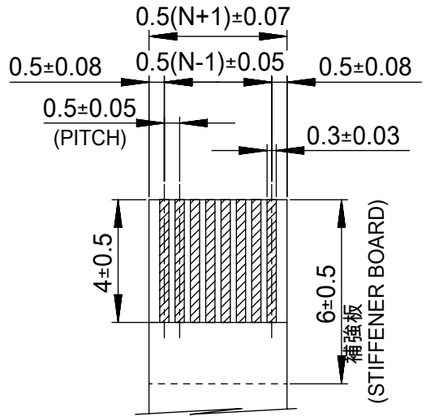

適合錫系めっきFFC推奨寸法

APPLICABLE FFC OF TIN PLATING RECOMMENDED DIMENSION

仕上がり厚さ：0.3±0.05

THICKNESS: 0.3+0.05/-0.05

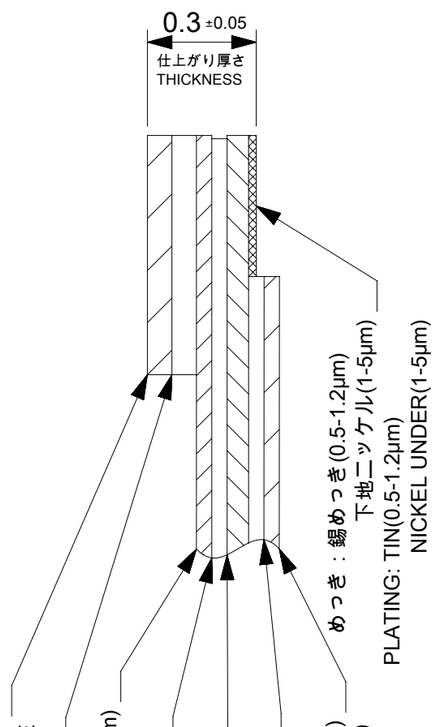

FPC構成推奨仕様

RECOMMENDED STRUCTURE OF FPC

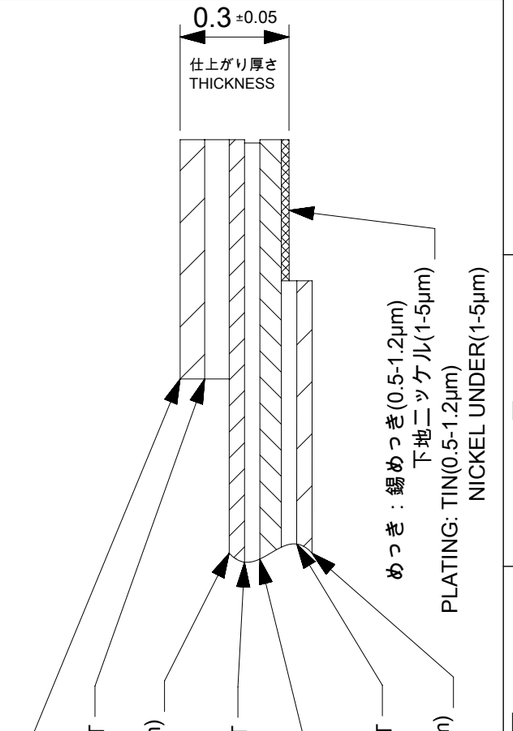

FFC構成推奨仕様

RECOMMENDED STRUCTURE OF FFC

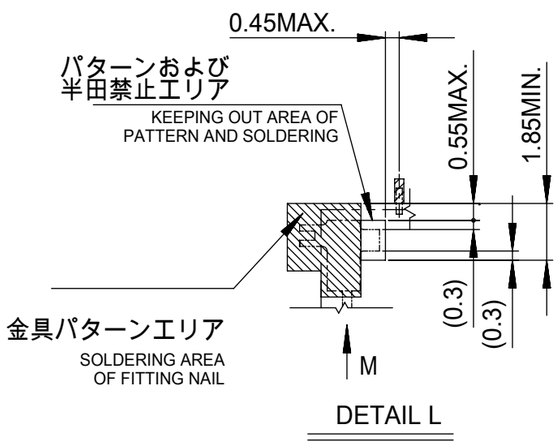

DETAIL L

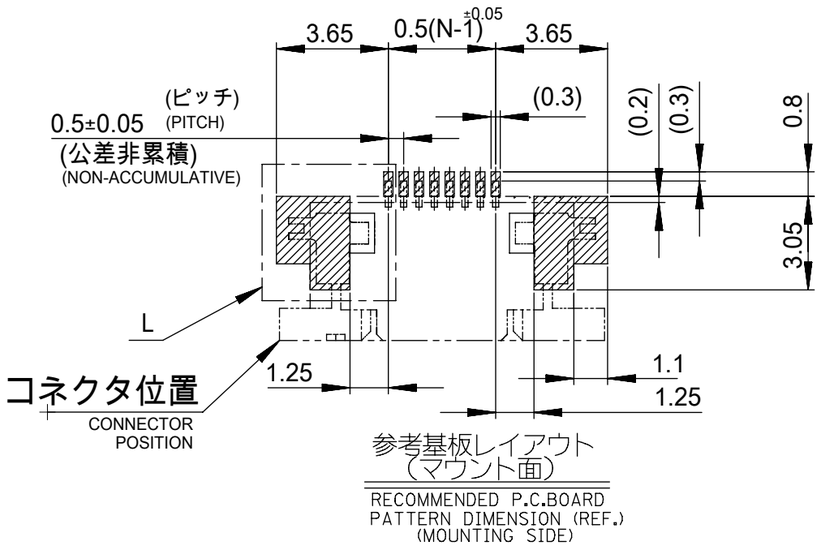

参考基板レイアウト
（マウント面）

RECOMMENDED P.C.BOARD PATTERN DIMENSION (REF.)
(MOUNTING SIDE)

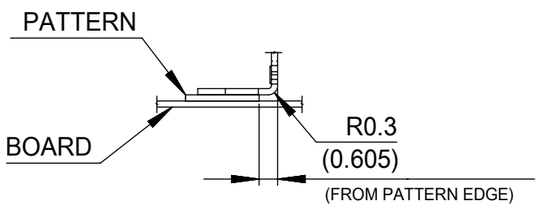

VIEW M

(DETAIL OF FITTING NAIL ON PATTERN)

FPCについて：

打抜き方向は導体側から補強板側を推奨致します。

補強フィルム材質はポリイミドを推奨致します。

接着剤は熱硬化接着剤を推奨致します。

ABOUT FPC:

RECOMMENDED PUNCHER DIRECTION :
FROM CONDUCTOR SIDE TO STIFFENER BOARD SIDE.

RECOMMENDED MATERIAL:
STIFFENER FILM : POLYIMIDE
BONDING AGENT : THERMOSETTING BONDING AGENT

GENERAL TOLERANCES (UNLESS SPECIFIED)	
10^{UNDER}	±0.2
10^{OVER} 30^{UNDER}	±0.25
30^{OVER}	±0.3
ANGULAR	±3 °

THIS DRAWING CONTAINS INFORMATION THAT IS PROPRIETARY TO MOLEX ELECTRONIC TECHNOLOGIES, LLC AND SHOULD NOT BE USED WITHOUT WRITTEN PERMISSION

DIMENSION UNITS	SCALE
mm	NTS

GENERAL TOLERANCES (UNLESS SPECIFIED)

ANGULAR TOL	± °
4 PLACES	±
3 PLACES	±
2 PLACES	±
1 PLACE	±
0 PLACES	±

DRAFT WHERE APPLICABLE MUST REMAIN WITHIN DIMENSIONS

CURRENT REV DESC:

EC NO: 758488
DRWN: RAJMOK 2023/07/27
CHK'D: HSHIMOYAMA 2023/08/03
APPR: YNAITO 2023/08/03

INITIAL REVISION:
DRWN: YSAKIYAMA 2004/01/16
APPR: MSASAO 2004/01/19

THIRD ANGLE PROJECTION | DRAWING: A3-SIZE | SERIES: 52437

molex

0.5 FPC CONN. ZIF FOR SMT R/A (BOTTOM CONTACT) TIN-BISMUTH PLATING

PRODUCT CUSTOMER DRAWING

DOCUMENT NUMBER	DOC TYPE	DOC PART	REVISION
SD-52437-017	PSD	001	G

MATERIAL NUMBER	CUSTOMER	SHEET NUMBER
SEE SHEET 1	GENERAL MARKET	2 OF 2

DOCUMENT STATUS	P1	RELEASE DATE	2023/08/03 11:20:29

FORMAT: master-ib-prod-A3
REVISION: J1
DATE: 2021/05/01

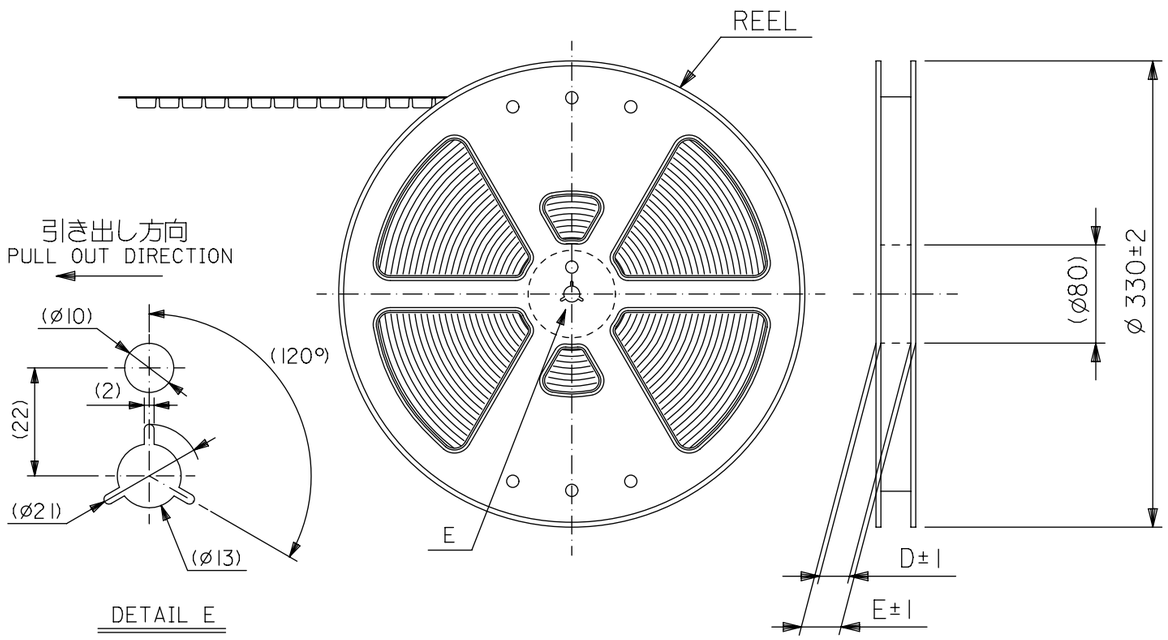

注記 NOTES

1. 製品番号 52437-**26 の梱包状態はアクチュエータがロックした状態とする。
   詳細寸法については図面 SD-52437-017 を参照下さい。
   IN THE PACKAGE,ACTUATOR OF PART NO.52437-**26 SHOULD BE LOCKED
   RE DETAILED DIMENSIONS,SEE SD-52437-017.
2. 梱包数量：１０００個／リール
   NUMBER OF CONNECTORS:1000PCS/REEL
3. リードテープ長さ LEAD TAPE LENGTH

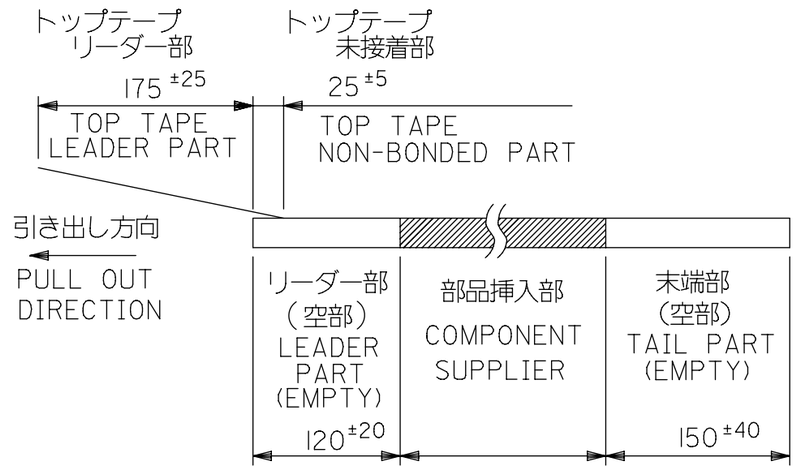

4. トップテープの剥離強度：（剥離方向は下図参照）
   ０．１N～１．３N {１０ｇｆ～１３０ｇｆ}尚、本規格値は、出荷時に適用。
   （但し、輸送時に剥離が発生しない事。）

PEELING OFF FORCE OF TOP TAPE
0.1N ～1.3N{10gf ～130gf}(PEELING DIRECTION AS SHOWN IN FOLLOWING FIG.)
THIS REQUIREMENT SHOULD BE APPLIED AT SHIPMENT
PEEL OFF SHOULD NOT BE ALLOWED,
DURING TRANSPORTATION

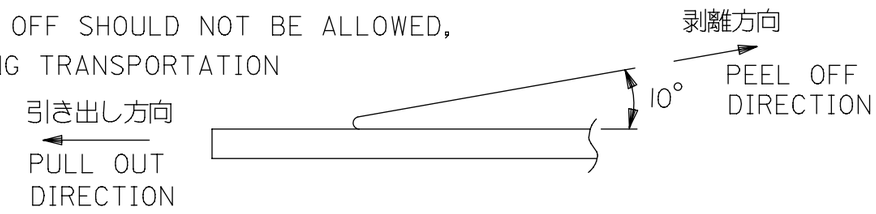

5. 材料 (MATERIAL)
   キャリアテープ (CARRIER TAPE) :ポリプロピレン(POLYPROPYLENE)
   トップテープ (TOPTAPE) : PET, PE, PEF
   リール (REEL): ポリスチレン (PS) <リサイクル材を含む>
   POLYSTYREN (PS) <RECYCLE MATERIAL CONTAINED>

6. 本製品は 52437-**91 の鉛フリー品である。
   THIS PRODUCT IS LEAD FREE OF 52437-**91.

GENERAL TOLERANCES (UNLESS SPECIFIED)	
10 UNDER	±0.2
10 OVER 30 UNDER	±0.25
30 OVER	±0.3
ANGULAR	±3 °

THIS DRAWING CONTAINS INFORMATION THAT IS PROPRIETARY TO MOLEX ELECTRONIC TECHNOLOGIES, LLC AND SHOULD NOT BE USED WITHOUT WRITTEN PERMISSION

DIMENSION UNITS	SCALE
mm	NTS

GENERAL TOLERANCES (UNLESS SPECIFIED)
ANGULAR TOL ± °
4 PLACES ±
3 PLACES ±
2 PLACES ±
1 PLACE ±
0 PLACES ±
DRAFT WHERE APPLICABLE MUST REMAIN WITHIN DIMENSIONS

CURRENT REV DESC:
EC NO: 719890
DRWN: NARENC 2022/08/23
CHK'D: SMARUYAMA 2022/09/05
APPR: YNAITO 2022/09/05
INITIAL REVISION:
DRWN: YSAKIYAMA 2004/01/16
APPR: MSASAO 2004/01/19

molex

0.5 FPC CONN ZIF SMT RA
EMBSTP PKG -LEAD FREE-

PRODUCT CUSTOMER DRAWING

DOCUMENT NUMBER	DOC TYPE	DOC PART	REVISION
SD-52437-018	PSD	001	B

THIRD ANGLE PROJECTION	DRAWING	SERIES	MATERIAL NUMBER	CUSTOMER	SHEET NUMBER
	A3-SIZE	52437	SEE TABLE	GENERAL MARKET	1 OF 3

DOCUMENT STATUS	P1	RELEASE DATE	2022/09/05 05:51:50

FORMAT: master_tb_mod-A3
REVISION: J1
DATE: 2021/05/01

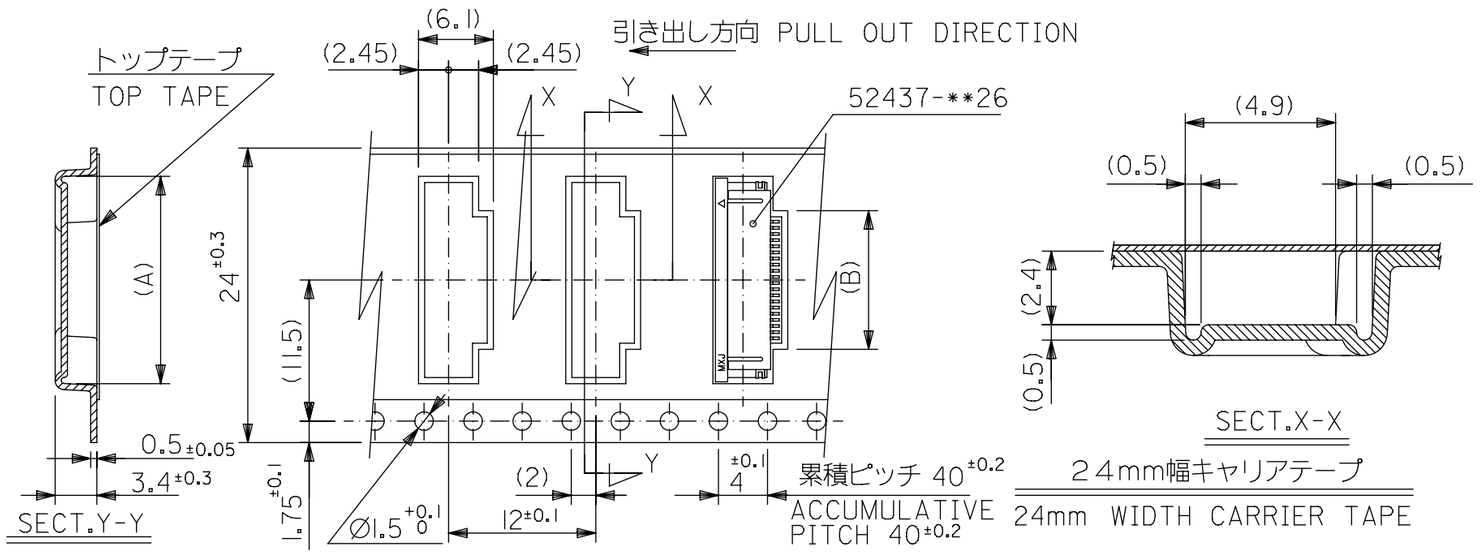

24	29.4	25.4	11.8	17.4	52437-2172	21
キャリアテープ幅 CARRIER TAPE WIDTH	E	D	(B)	(A)	MATERIAL NO.	極数 CIRCUIT

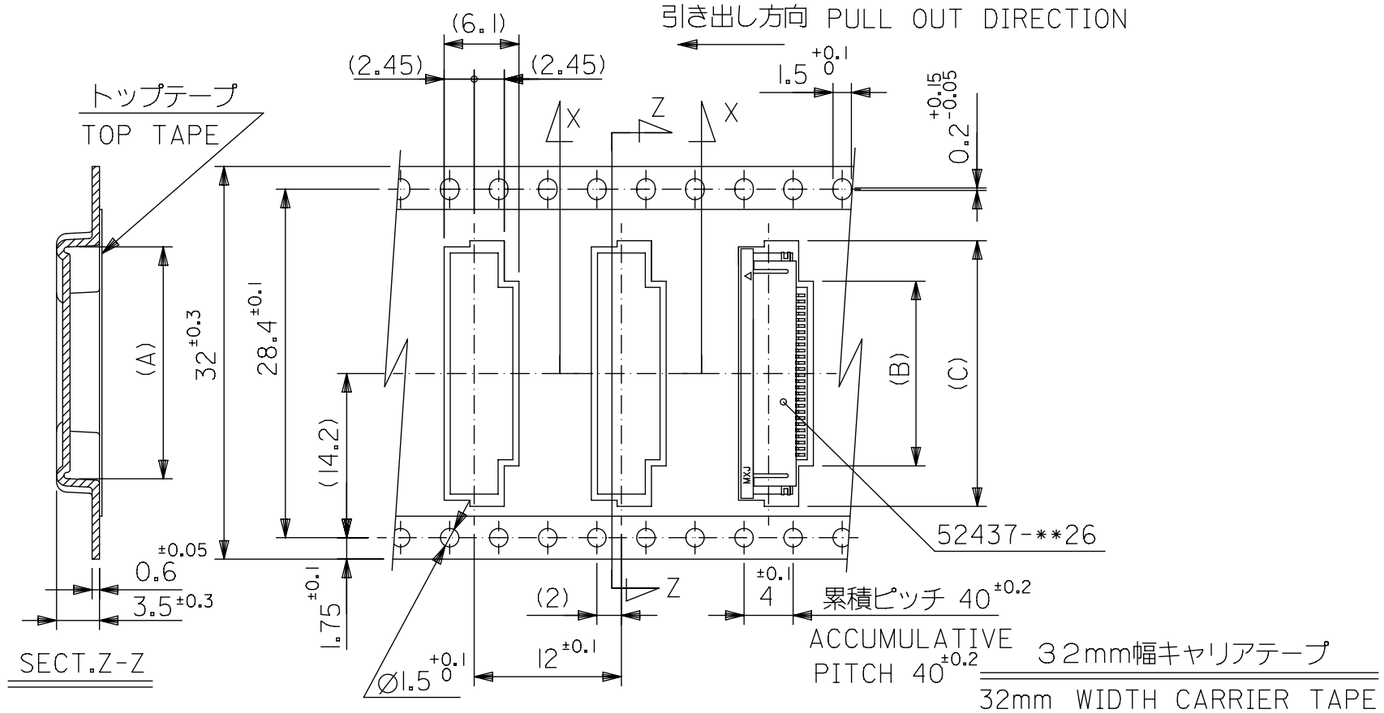

32	37.4	33.4	22.4	15.8	21.4	52437-2972	29
			21.9	15.3	20.9	-2872	28
			21.4	14.8	20.4	-2772	27
			20.9	14.3	19.9	-2672	26
			20.4	13.8	19.4	-2572	25
			19.9	13.3	18.9	-2472	24
			19.4	12.8	18.4	-2372	23
			18.9	12.3	17.9	52437-2272	22
キャリアテープ幅 CARRIER TAPE WIDTH	E	D	(C)	(B)	(A)	MATERIAL NO.	極数 CIRCUIT

GENERAL TOLERANCES (UNLESS SPECIFIED)	
10^{UNDER}	±0.2
10^{OVER} 30^{UNDER}	±0.25
30^{OVER}	±0.3
ANGULAR	±3 °

THIS DRAWING CONTAINS INFORMATION THAT IS PROPRIETARY TO MOLEX ELECTRONIC TECHNOLOGIES, LLC AND SHOULD NOT BE USED WITHOUT WRITTEN PERMISSION

DIMENSION UNITS: mm
SCALE: NTS
GENERAL TOLERANCES (UNLESS SPECIFIED)
ANGULAR TOL ±
4 PLACES ±
3 PLACES ±
2 PLACES ±
1 PLACE ±
0 PLACES ±
DRAFT WHERE APPLICABLE MUST REMAIN WITHIN DIMENSIONS

CURRENT REV DESC:

EC NO: 719890
DRWN: NARENC 2022/08/23
CHK'D: SMARUYAMA 2022/09/05
APPR: YNAITO 2022/09/05

INITIAL REVISION:
DRWN: YSAKIYAMA 2004/01/16
APPR: MSASAO 2004/01/19

THIRD ANGLE PROJECTION
DRAWING: A3-SIZE
SERIES: 52437

molex

0.5 FPC CONN ZIF SMT RA
EMBSTP PKG -LEAD FREE-

PRODUCT CUSTOMER DRAWING

DOCUMENT NUMBER	DOC TYPE	DOC PART	REVISION
SD-52437-018	PSD	001	B

MATERIAL NUMBER	CUSTOMER	SHEET NUMBER
SEE TABLE	GENERAL MARKET	2 OF 3

DOCUMENT STATUS	P1	RELEASE DATE	2022/09/05 05:51:50

FORMAT: master_B_size-A3
REVISION: J1
DATE: 2021/05/07

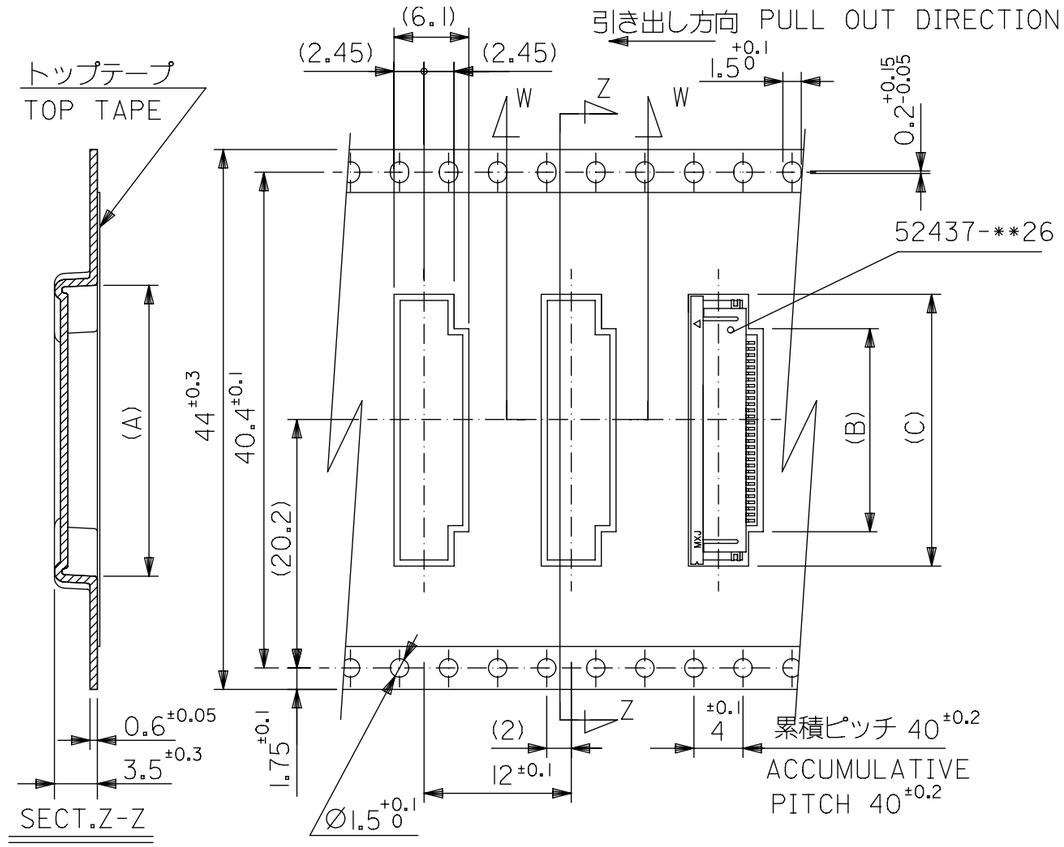

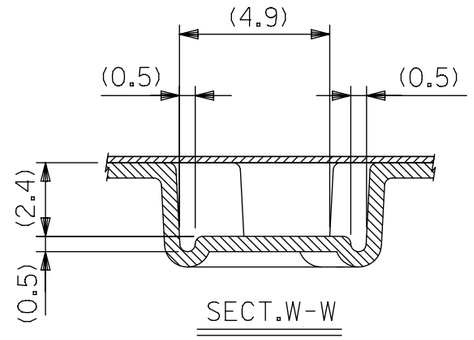

44mm幅キャリアテープ

44mm WIDTH CARRIER TAPE

44	49.4	45.4	22.9	16.3	21.9	52437-3072	30
キャリアテープ幅 CARRIER TAPE WIDTH	E	D	(C)	(B)	(A)	MATERIAL NO.	極数 CIRCUIT

GENERAL TOLERANCES (UNLESS SPECIFIED)	
10 UNDER	±0.2
10 OVER 30 UNDER	±0.25
30 OVER	±0.3
ANGULAR	±3 °

THIS DRAWING CONTAINS INFORMATION THAT IS PROPRIETARY TO MOLEX ELECTRONIC TECHNOLOGIES, LLC AND SHOULD NOT BE USED WITHOUT WRITTEN PERMISSION

DIMENSION UNITS: mm | SCALE: NTS

GENERAL TOLERANCES (UNLESS SPECIFIED)
ANGULAR TOL ± °
4 PLACES ±
3 PLACES ±
2 PLACES ±
1 PLACE ±
0 PLACES ±
DRAFT WHERE APPLICABLE MUST REMAIN WITHIN DIMENSIONS

CURRENT REV DESC:
EC NO: 719890
DRWN: NARENC 2022/08/23
CHK'D: SMARUYAMA 2022/09/05
APPR: YNAITO 2022/09/05
INITIAL REVISION:
DRWN: YSAKIYAMA 2004/01/16
APPR: MSASAO 2004/01/19

THIRD ANGLE PROJECTION | DRAWING: A3-SIZE | SERIES: 52437

molex

0.5 FPC CONN ZIF SMT RA
EMBSTP PKG -LEAD FREE-

PRODUCT CUSTOMER DRAWING

DOCUMENT NUMBER	DOC TYPE	DOC PART	REVISION
SD-52437-018	PSD	001	B

MATERIAL NUMBER	CUSTOMER	SHEET NUMBER
SEE TABLE	GENERAL MARKET	3 OF 3

DOCUMENT STATUS	P1	RELEASE DATE	2022/09/05 05:51:50

FORMAT: master_tb_mod-A3
REVISION: J1
DATE: 2021/05/01