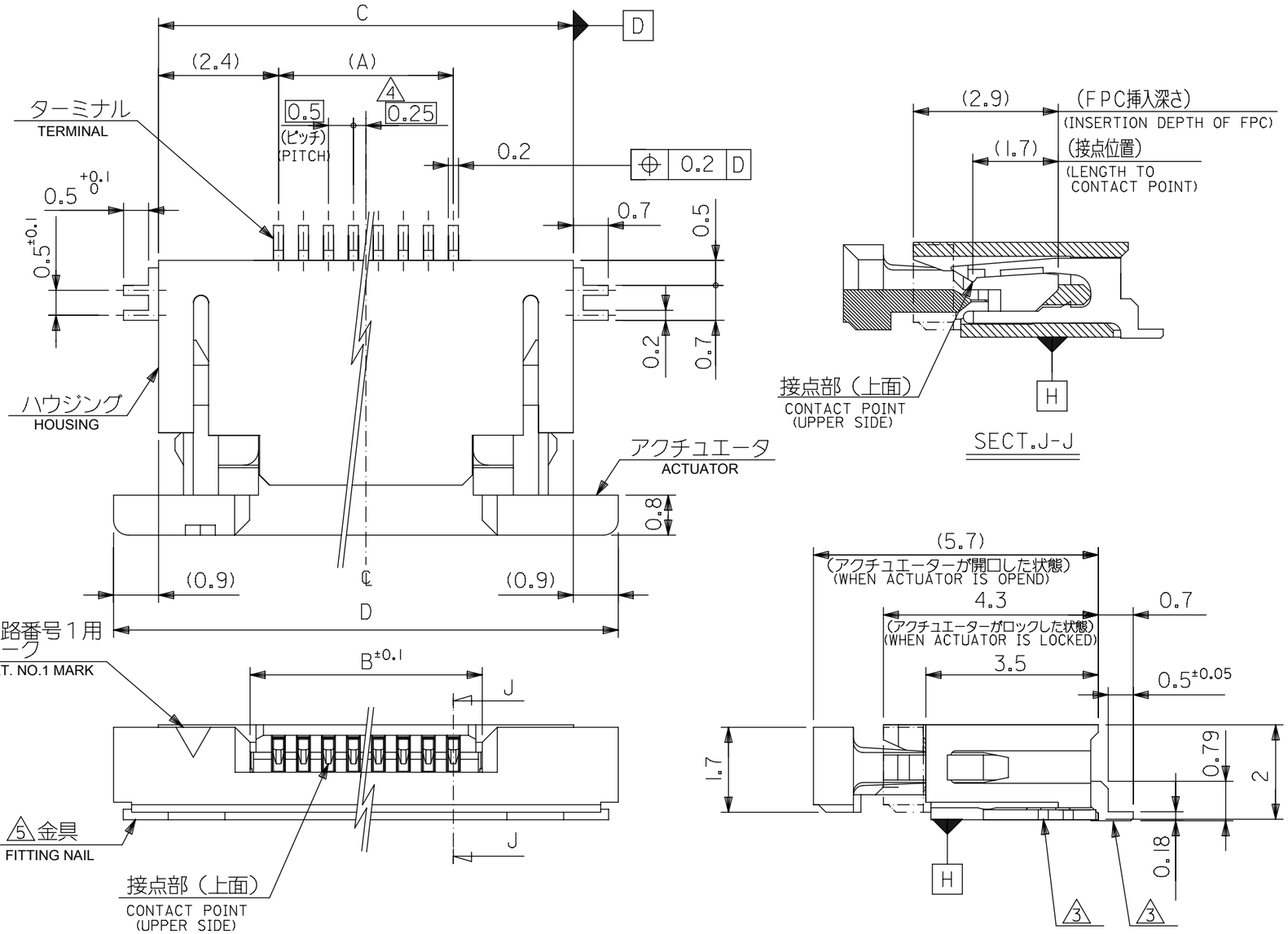

SECT.J-J

注記 NOTES

1. 使用材料　MATERIAL

ハウジング HOUSING	：ポリアミド４６、ガラス充填、ＵＬ９４Ｖ－０（白） POLYAMIDE46, GLASS FILLED, UL94V-0(WHITE)
アクチュエータ ACTUATOR	：ポリフェニレンサルファイド　ガラス充填、ＵＬ９４Ｖ－０（黒） POLYPHENYLENE SULFIDE ,GLASS FILLED, UL94V-0(BLACK)
ターミナル TERMINAL	：リン青銅、ニッケル下地錫ビスマスメッキ（ｔ＝０．２） PHOSPOR BRONZE ,TIN-BISMUTH OVER NICKEL PLATING
金具 FITTING NAIL	：リン青銅、ニッケル下地純錫メッキ（ｔ＝０．２） PHOSPOR BRONZE ,TIN OVER NICKEL PLATING

2. エンボステープ梱包時は、アクチュエータがロックした状態とする。
IN THE PACKAGE,ACTUATOR OF PART NO. 52745-**19 SHOULD BE LOCKED.

3 ソルダーテール半田付け面のズレ量、及び金具半田付け面のズレ量は、基準面 H に対し上方向 ０．１ ＭＡＸ．下方向 ０．１５ＭＡＸ．とする。
MISALIGNMENT OF SOLDER TAILS AND FITTING NAILS FROM H
UPPER DIRECTION: 0.1 MAX. , LOWER DIRECTION: 0.15MAX.

4 偶数極に適用。
APPLY FOR EVEN CIRCUIT.

5 パターンはくり止め用金具
FITTING NAIL FOR PREVENTION OF PEELING
OF P.C.B. PATTERN.

6. 本製品は　５２７４５－＊＊１７　の鉛フリー品である。
THIS PRODUCT IS LEAD FREE OF 52745-**17

7 ＲＯ．３は、ＦＰＣの導体部にかからないこと。
RO.3 MUST NOT BE OVERLAPPED TO PATTERN OF FPC.

D	C	B	(A)	EMBOSSED TAPE / ORDER No. オーダー番号	MATERIAL NO.	極数 CIRCUIT
16.1	14.3	10.65	9.5	52745-2096	52745-2019	20
15.6	13.8	10.15	9.0	-1996	-1919	19
15.1	13.3	9.65	8.5	-1896	-1819	18
14.6	12.8	9.15	8.0	-1796	-1719	17
14.1	12.3	8.65	7.5	-1696	-1619	16
13.6	11.8	8.15	7.0	-1596	-1519	15
13.1	11.3	7.65	6.5	-1496	-1419	14
12.6	10.8	7.15	6.0	-1396	-1319	13
12.1	10.3	6.65	5.5	-1296	-1219	12
11.6	9.8	6.15	5.0	-1196	-1119	11
11.1	9.3	5.65	4.5	-1096	-1019	10
10.6	8.8	5.15	4.0	-0996	-0919	9
10.1	8.3	4.65	3.5	-0896	-0819	8
9.6	7.8	4.15	3.0	-0796	-0719	7
9.1	7.3	3.65	2.5	-0696	-0619	6
8.1	6.3	2.65	1.5	52745-0496	52745-0419	4

52745-**19 MODEL NO.

GENERAL TOLERANCES (UNLESS SPECIFIED)	
10^{UNDER}	±0.2
10^{OVER} 30^{UNDER}	±0.25
30^{OVER}	±0.3
ANGULAR	±3 °

GENERAL TOLERANCES (UNLESS SPECIFIED)	
ANGULAR TOL	± °
4 PLACES	±
3 PLACES	±
2 PLACES	±
1 PLACE	±
0 PLACES	±

DRAFT WHERE APPLICABLE MUST REMAIN WITHIN DIMENSIONS

THIS DRAWING CONTAINS INFORMATION THAT IS PROPRIETARY TO MOLEX ELECTRONIC TECHNOLOGIES, LLC AND SHOULD NOT BE USED WITHOUT WRITTEN PERMISSION

DIMENSION UNITS: mm　SCALE: NTS

CURRENT REV DESC:

EC NO: 758488
DRWN: RAJMOK 2023/07/27
CHK'D: HSHIMOYAMA 2023/08/03
APPR: YNAITO 2023/08/03

INITIAL REVISION:
DRWN: TUENO 2004/01/14
APPR: MSASAO 2004/01/19

THIRD ANGLE PROJECTION　DRAWING: A3-SIZE　SERIES: 52745

molex

0.5 FPC CONN ASSY ZIF
UPR CONT -LEAD FREE-

PRODUCT CUSTOMER DRAWING

DOCUMENT NUMBER	DOC TYPE	DOC PART	REVISION
SD-52745-048	PSD	001	E

MATERIAL NUMBER	CUSTOMER	SHEET NUMBER
SEE TABLE	GENERAL MARKET	1 OF 2

DOCUMENT STATUS	P1	RELEASE DATE	2023/08/03 11:20:33

FORMAT: master-ib-prod-A3
REVISION: J1
DATE: 2021/05/01

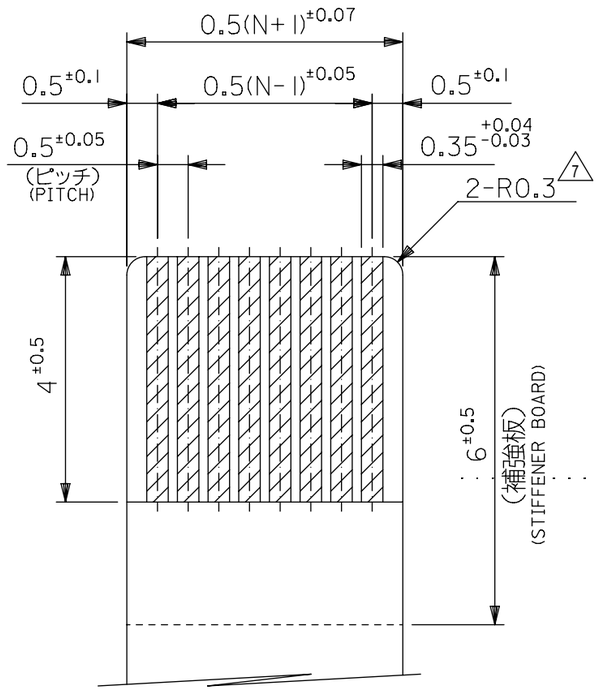

適合ＦＰＣ推奨寸法
APPLICABLE FPC
RECOMMENDED DIMENSION
（仕上がり厚さ：0.3±0.03）
（THICKNESS:0.3±0.03）

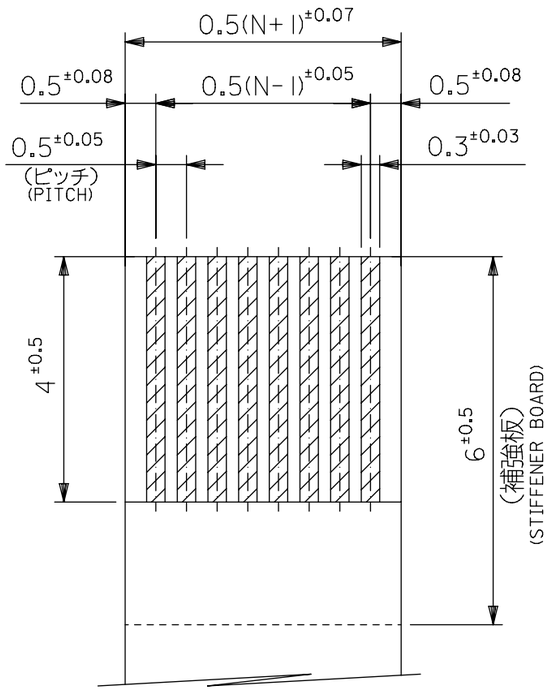

適合ＦＦＣ推奨寸法
APPLICABLE FFC
RECOMMENDED DIMENSION
（仕上がり厚さ：0.3±0.03）
（THICKNESS:0.3±0.03）

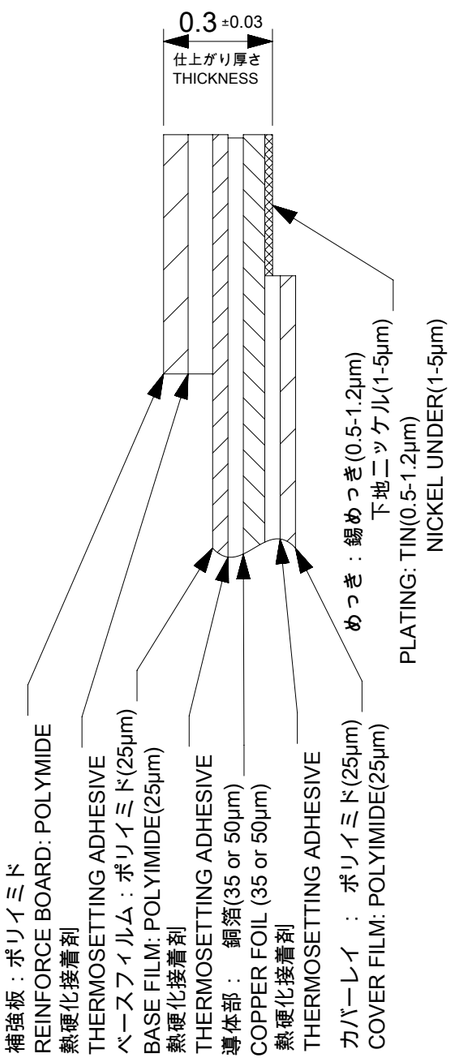

FPC構成推奨仕様
RECOMMENDED STRUCTURE OF FPC

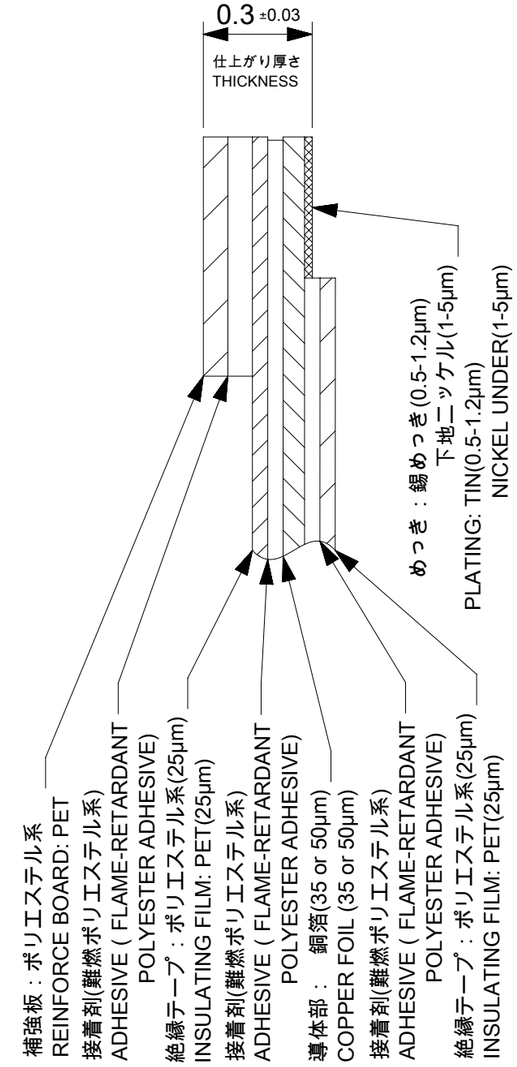

FFC構成推奨仕様
RECOMMENDED STRUCTURE OF FFC

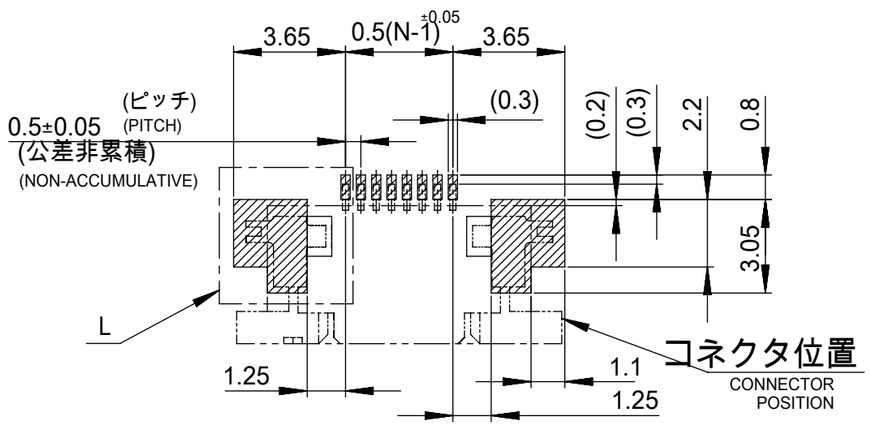

参考基板レイアウト
(マウント面)
RECOMMENDED P.C.BOARD
PATTERN DIMENSION (REF.)
(MOUNTING SIDE)

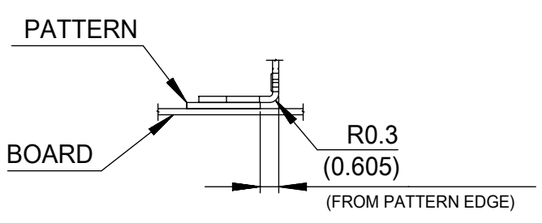

VIEW M
(DETAIL OF FITTING NAIL
ON PATTERN)

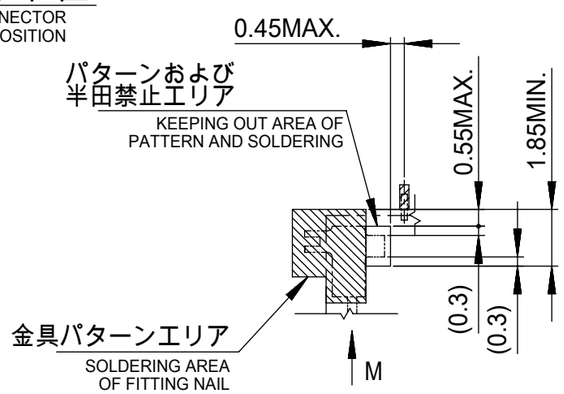

DETAIL L

ＦＰＣについて：
打抜き方向は導体側から補強板側を推奨致します。
補強フィルム材質はポリイミドを推奨致します。
接着剤は熱硬化接着剤を推奨致します。

ABOUT FPC :
RECOMMENDED PUNCHER DIRECTION : FROM CONDUCTOR SIDE TO STIFFENER BOARD SIDE.
RECOMMENDED MATERIAL :
STIFFENER FILM : POLYIMIDE
BONDING AGENT : THERMOSETTING BONDING AGENT

GENERAL TOLERANCES (UNLESS SPECIFIED)	
10^{UNDER}	±0.2
10^{OVER} 30^{UNDER}	±0.25
30^{OVER}	±0.3
ANGULAR	±3 °

THIS DRAWING CONTAINS INFORMATION THAT IS PROPRIETARY TO MOLEX ELECTRONIC TECHNOLOGIES, LLC AND SHOULD NOT BE USED WITHOUT WRITTEN PERMISSION

DIMENSION UNITS: mm
SCALE: NTS
GENERAL TOLERANCES (UNLESS SPECIFIED)
ANGULAR TOL ± °
4 PLACES ±
3 PLACES ±
2 PLACES ±
1 PLACE ±
0 PLACES ±
DRAFT WHERE APPLICABLE MUST REMAIN WITHIN DIMENSIONS

CURRENT REV DESC:

EC NO: 758488
DRWN: RAJMOK 2023/07/27
CHK'D: HSHIMOYAMA 2023/08/03
APPR: YNAITO 2023/08/03

INITIAL REVISION:
DRWN: TUENO 2004/01/14
APPR: MSASAO 2004/01/19

THIRD ANGLE PROJECTION | DRAWING: A3-SIZE | SERIES: 52745

molex

0.5 FPC CONN ASSY ZIF
UPR CONT -LEAD FREE-

PRODUCT CUSTOMER DRAWING

DOCUMENT NUMBER	DOC TYPE	DOC PART	REVISION
SD-52745-048	PSD	001	E

MATERIAL NUMBER	CUSTOMER	SHEET NUMBER
SEE SHEET-1	GENERAL MARKET	2 OF 2

DOCUMENT STATUS	P1	RELEASE DATE	2023/08/03 11:20:33

FORMAT: master-lb-prod-A3
REVISION: J1
DATE: 2021/05/01

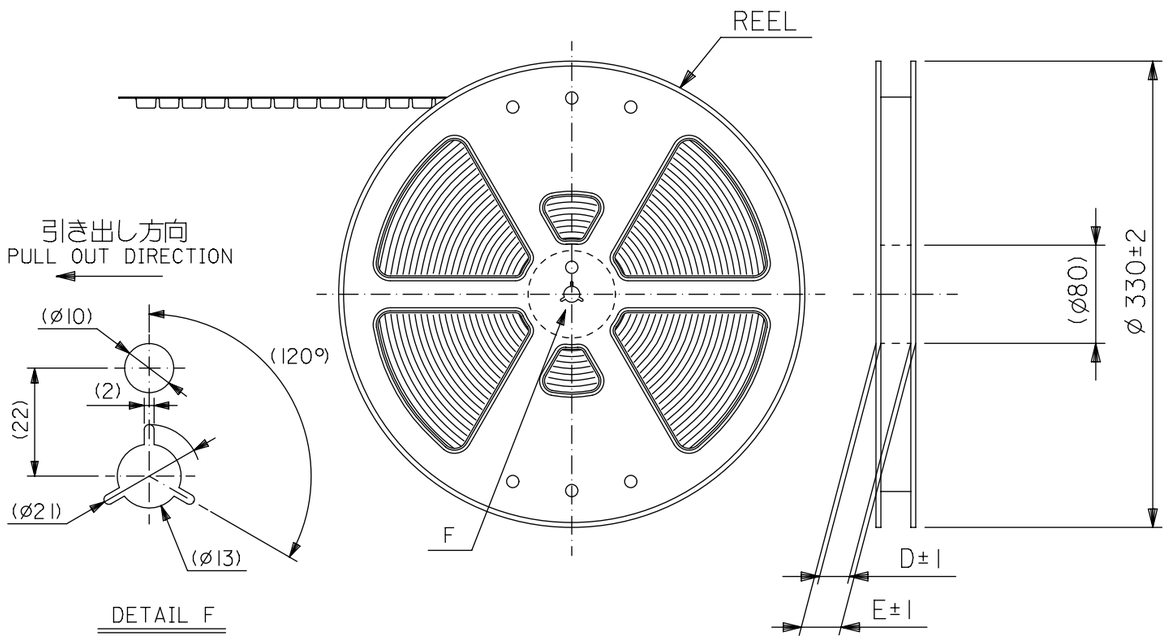

DETAIL F

注記 NOTES

1. 製品番号 52745-**19 の梱包状態はアクチュエータがロックした状態とする。
   詳細寸法については図面 SD-52745-048 を参照下さい。
   IN THE PACKAGE,ACTUATOR OF PART NO.52745-**19 SHOULD BE LOCKED
   RE DETAILED DIMENSIONS,SEE SD-52745-048.
2. 梱包数量：１０００個／リール
   NUMBER OF CONNECTORS:1000PCS/REEL
3. リードテープ長さ LEAD TAPE LENGTH

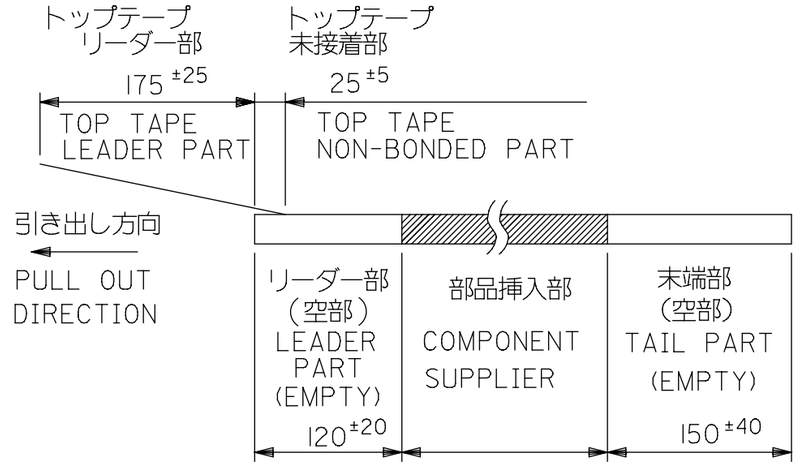

4. トップテープの剥離強度：（剥離方向は下図参照）
   ０．１N～１．３N（１０ｇｆ～１３０ｇｆ）尚、本規格値は、出荷時に適用。
   （但し、輸送時に剥離が発生しない事。）
   PEELING OFF FORCE OF TOP TAPE:
   0.1N～1.3N(10gf～130gf)(PEELING DIRECTION AS SHOWN IN FOLLOWING FIG.)
   THIS REQUIREMENT SHOULD BE APPLIED AT SHIPMENT
   PEEL OFF SHOULD NOT BE ALLOWED,
   DURING TRANSPORTATION.

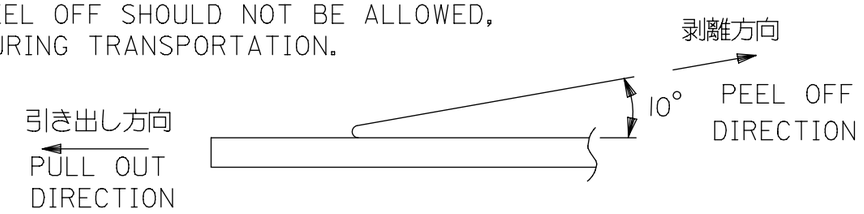

5. 材料　　キャリアテープ：ポリプロピレン（ＰＰ）
   トップテープ：ＰＥＴ，ＰＥ，ＰＥＦ
   リール：ポリスチレン（ＰＳ）<リサイクル材を含む>
   MATERIAL CARRIER TAPE:POLYPROPYLENE
   TOP TAPE:PET,PE,PEF
   REEL:POLYSTYRENE(PS)
   <RECYCLE MATERIAL CONTAINED>

6. 本製品は　５２７４５-＊＊９０　の鉛フリー品である。
   THIS PRODUCT IS LEAD FREE OF 52745-**90

7.本製品は乾燥剤入り、ハイバリア梱包仕様である。
THIS PRODUCT IS HIGH BARRIER PACKAGE WITH DESICCANT.

52745-**96 MODEL NO.

THIS DRAWING CONTAINS INFORMATION THAT IS PROPRIETARY TO MOLEX ELECTRONIC TECHNOLOGIES, LLC AND SHOULD NOT BE USED WITHOUT WRITTEN PERMISSION

GENERAL TOLERANCES (UNLESS SPECIFIED)	
10 UNDER	±0.2
10 OVER 30 UNDER	±0.25
30 OVER	±0.3
ANGULAR	±3 °

DIMENSION UNITS	SCALE
mm	NTS

GENERAL TOLERANCES (UNLESS SPECIFIED)
ANGULAR TOL ± °
4 PLACES ±
3 PLACES ±
2 PLACES ±
1 PLACE ±
0 PLACES ±
DRAFT WHERE APPLICABLE MUST REMAIN WITHIN DIMENSIONS

CURRENT REV DESC:
EC NO: 719890
DRWN: NARENC 2022/08/24
CHK'D: SMARUYAMA 2022/09/05
APPR: YNAITO 2022/09/05
INITIAL REVISION:
DRWN: TUENO 2004/01/14
APPR: MSASAO 2004/01/19

THIRD ANGLE PROJECTION | DRAWING A3-SIZE | SERIES 52745

molex

0.5 FPC CONN UPR CONT
EMBSTP PKG -LEAD FREE-

PRODUCT CUSTOMER DRAWING

DOCUMENT NUMBER	DOC TYPE	DOC PART	REVISION
SD-52745-049	PSD	001	C

MATERIAL NUMBER	CUSTOMER	SHEET NUMBER
SEE TABLE	GENERAL MARKET	1 OF 3

DOCUMENT STATUS	P1	RELEASE DATE	2022/09/05 05:51:55

FORMAT: master_tb_mod-A3
REVISION: J1
DATE: 2021/05/01

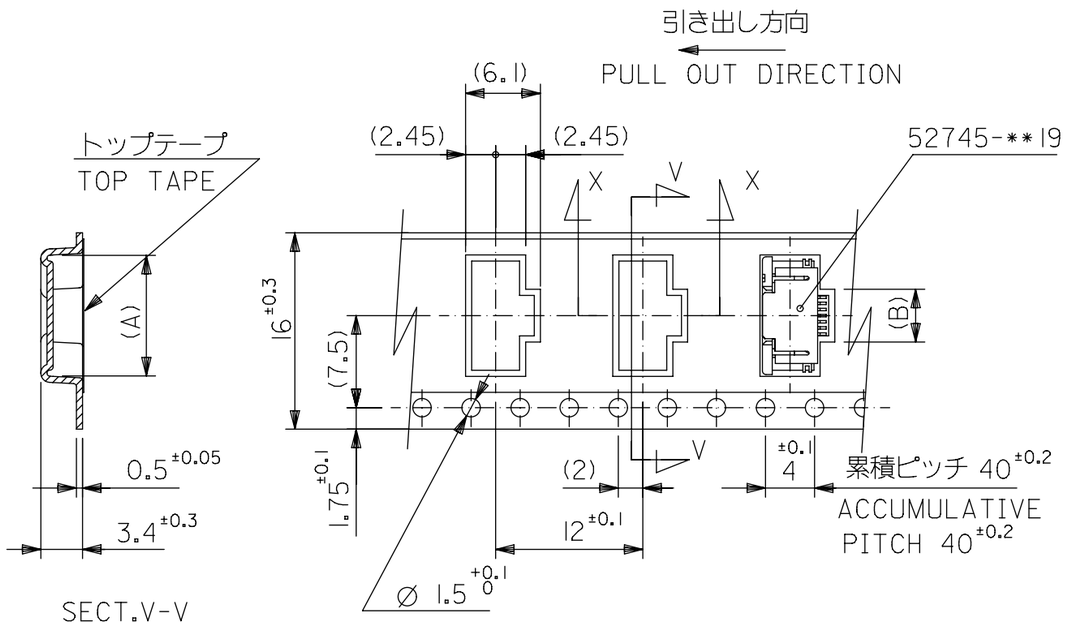

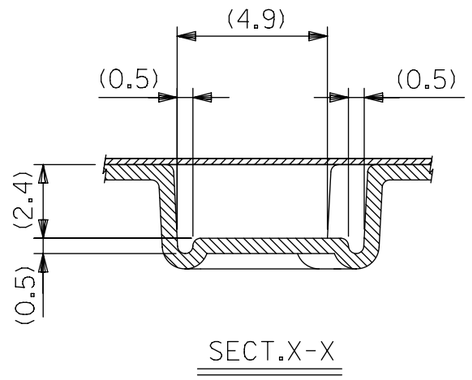

16mm 幅キャリアテープ

16mm WIDTH CARRIER TAPE

16	21.4	17.4	17.5	2.8	8.4	52745-0496	4
キャリアテープ幅 CARRIER TAPE WIDTH	E	D	(C)	(B)	(A)	MATERIAL NO.	極数 CIRCUIT

52745-**96 MODEL NO.

GENERAL TOLERANCES (UNLESS SPECIFIED)	
10 UNDER	±0.2
10 OVER 30 UNDER	±0.25
30 OVER	±0.3
ANGULAR	±3 °

THIS DRAWING CONTAINS INFORMATION THAT IS PROPRIETARY TO MOLEX ELECTRONIC TECHNOLOGIES, LLC AND SHOULD NOT BE USED WITHOUT WRITTEN PERMISSION

DIMENSION UNITS: mm | SCALE: NTS

GENERAL TOLERANCES (UNLESS SPECIFIED)

ANGULAR TOL	±	°
4 PLACES	±	
3 PLACES	±	
2 PLACES	±	
1 PLACE	±	
0 PLACES	±	

DRAFT WHERE APPLICABLE MUST REMAIN WITHIN DIMENSIONS

CURRENT REV DESC:

EC NO: 719890
DRWN: NARENC 2022/08/24
CHK'D: SMARUYAMA 2022/09/05
APPR: YNAITO 2022/09/05

INITIAL REVISION:
DRWN: TUENO 2004/01/14
APPR: MSASAO 2004/01/19

molex

0.5 FPC CONN UPR CONT
EMBSTP PKG -LEAD FREE-

PRODUCT CUSTOMER DRAWING

DOCUMENT NUMBER	DOC TYPE	DOC PART	REVISION
SD-52745-049	PSD	001	C

THIRD ANGLE PROJECTION | DRAWING: A3-SIZE | SERIES: 52745

MATERIAL NUMBER	CUSTOMER	SHEET NUMBER
SEE TABLE	GENERAL MARKET	2 OF 3

DOCUMENT STATUS	P1	RELEASE DATE	2022/09/05 05:51:55

FORMAT: master_B-size-A3
REVISION: J1
DATE: 2021/05/07

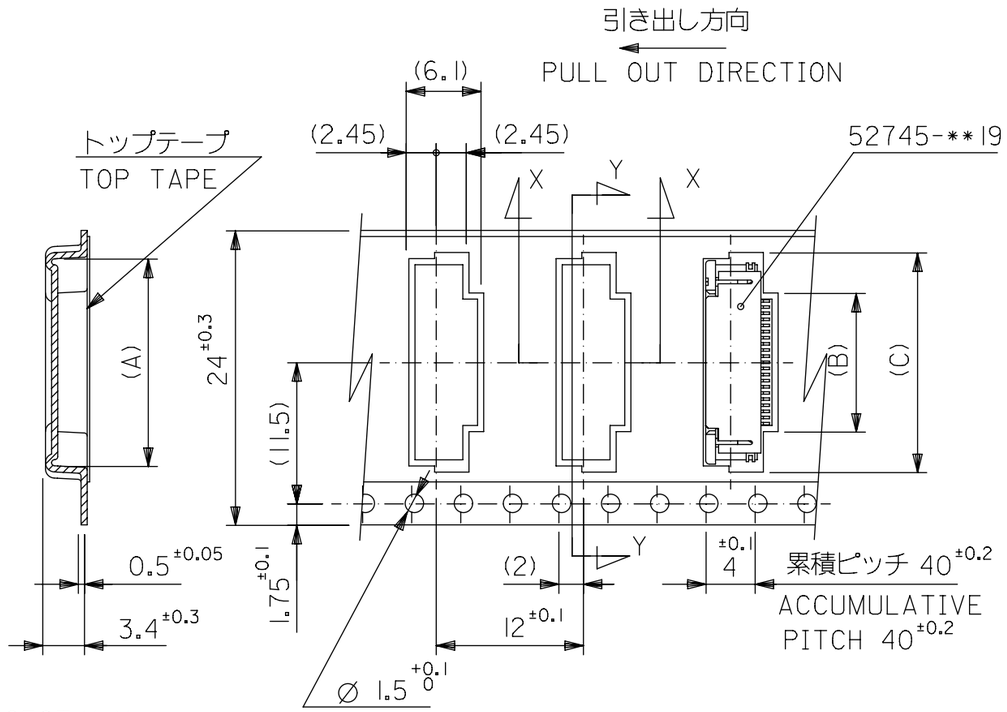

SECT.Y-Y

24mm幅キャリアテープ

24mm WIDTH CARRIER TAPE

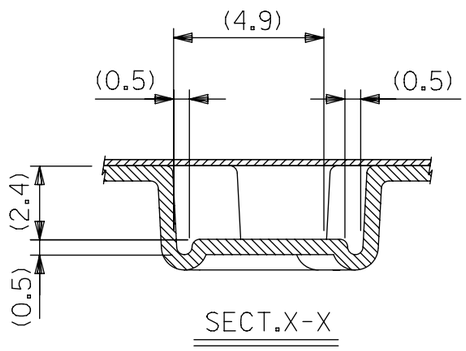

SECT.X-X

キャリアテープ幅 CARRIER TAPE WIDTH	E	D	(C)	(B)	(A)	MATERIAL NO.	極数 CIRCUIT
24	29.4	25.4	17.4	10.8	16.4	52745-2096	20
			16.9	10.3	15.9	-1996	19
			16.4	9.8	15.4	-1896	18
			15.9	9.3	14.9	-1796	17
			15.4	8.8	14.4	-1696	16
			14.9	8.3	13.9	-1596	15
			14.4	7.8	13.4	-1496	14
			13.9	7.3	12.9	-1396	13
			13.4	6.8	12.4	-1296	12
			12.9	6.3	11.9	-1196	11
			12.4	5.8	11.4	-1096	10
			11.9	5.3	10.9	-0996	9
			11.4	4.8	10.4	-0896	8
			10.9	4.3	9.9	-0796	7
			10.4	3.8	9.4	52745-0696	6

52745-**96 MODEL NO.

GENERAL TOLERANCES (UNLESS SPECIFIED)	
10 UNDER	±0.2
10 OVER 30 UNDER	±0.25
30 OVER	±0.3
ANGULAR	±3 °

THIS DRAWING CONTAINS INFORMATION THAT IS PROPRIETARY TO MOLEX ELECTRONIC TECHNOLOGIES, LLC AND SHOULD NOT BE USED WITHOUT WRITTEN PERMISSION

DIMENSION UNITS: mm | SCALE: NTS

GENERAL TOLERANCES (UNLESS SPECIFIED)
ANGULAR TOL ± °
4 PLACES ±
3 PLACES ±
2 PLACES ±
1 PLACE ±
0 PLACES ±

DRAFT WHERE APPLICABLE MUST REMAIN WITHIN DIMENSIONS

CURRENT REV DESC:

EC NO: 719890
DRWN: NARENC 2022/08/24
CHK'D: SMARUYAMA 2022/09/05
APPR: YNAITO 2022/09/05

INITIAL REVISION:
DRWN: TUENO 2004/01/14
APPR: MSASAO 2004/01/19

THIRD ANGLE PROJECTION | DRAWING: A3-SIZE | SERIES: 52745

molex

0.5 FPC CONN UPR CONT
EMBSTP PKG -LEAD FREE-

PRODUCT CUSTOMER DRAWING

DOCUMENT NUMBER	DOC TYPE	DOC PART	REVISION
SD-52745-049	PSD	001	C

MATERIAL NUMBER	CUSTOMER	SHEET NUMBER
SEE TABLE	GENERAL MARKET	3 OF 3

DOCUMENT STATUS	P1	RELEASE DATE	2022/09/05 05:51:55

FORMAT: master_tb_mod-A3
REVISION: J1
DATE: 2021/05/01