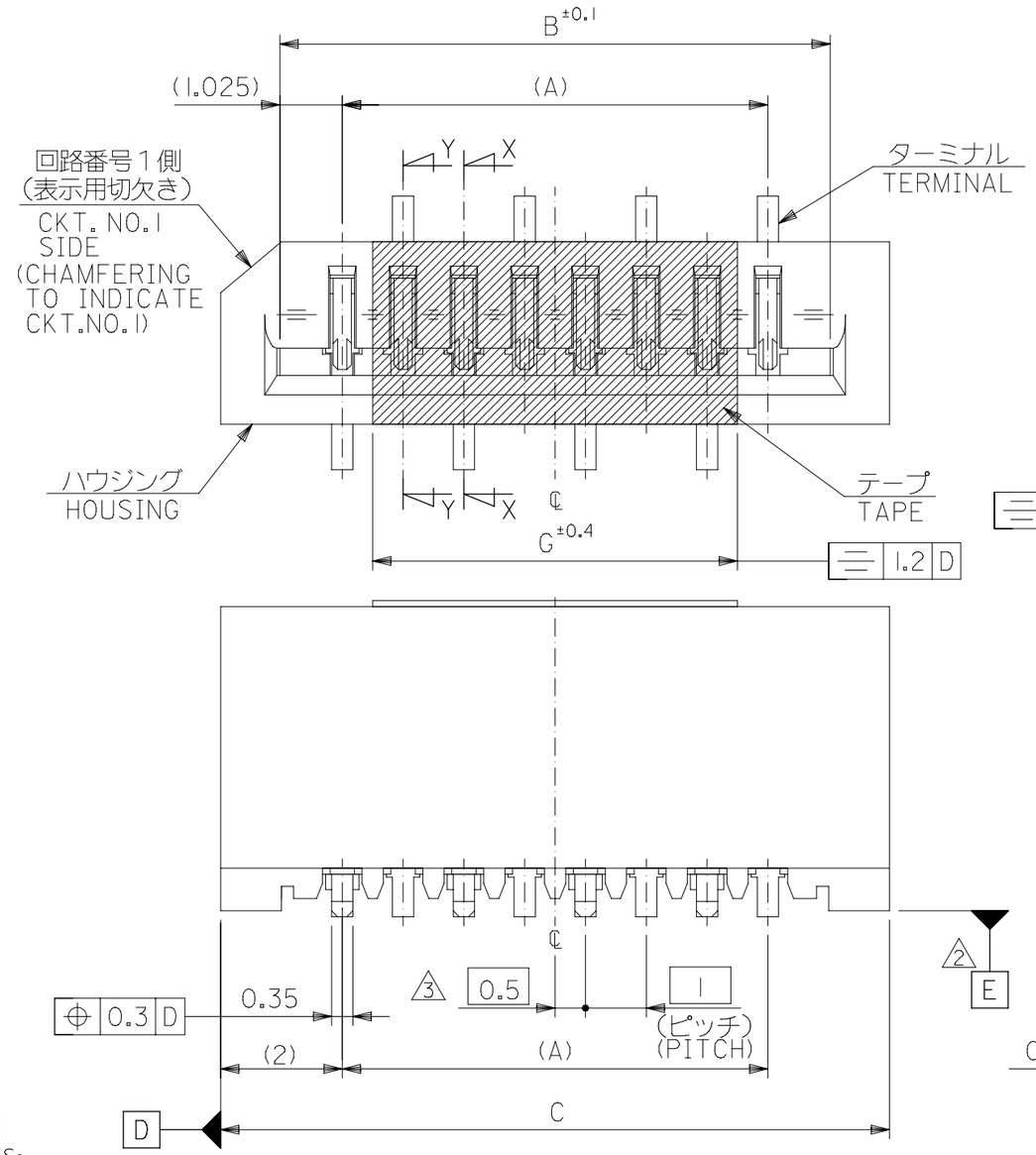

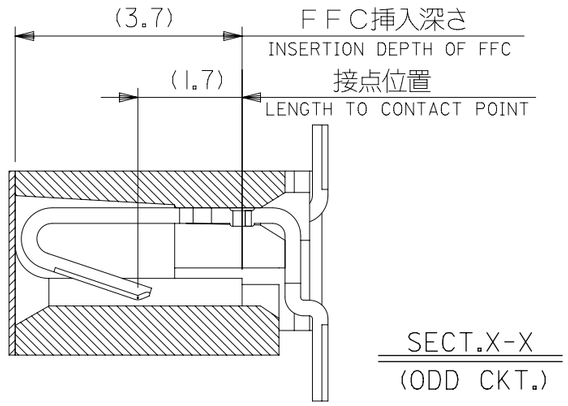

SECT.X-X
(ODD CKT.)

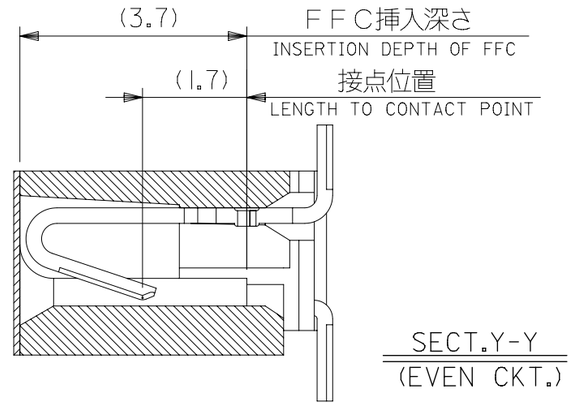

SECT.Y-Y
(EVEN CKT.)

	33	31.05	29	52808-3029	30
	32	30.05	28	-2929	29
	31	29.05	27	-2829	28
	30	28.05	26	-2729	27
	29	27.05	25	-2629	26
	28	26.05	24	-2529	25
	27	25.05	23	-2429	24
	26	24.05	22	-2329	23
	25	23.05	21	-2229	22
	24	22.05	20	-2129	21
	23	21.05	19	-2029	20
	22	20.05	18	-1929	19
6	21	19.05	17	-1829	18
	20	18.05	16	-1729	17
	19	17.05	15	-1629	16
	18	16.05	14	-1529	15
	17	15.05	13	-1429	14
	16	14.05	12	-1329	13
	15	13.05	11	-1229	12
	14	12.05	10	-1129	11
	13	11.05	9	-1029	10
	12	10.05	8	-0929	9
	11	9.05	7	-0829	8
	10	8.05	6	-0729	7
	9	7.05	5	-0629	6
4	8	6.05	4	-0529	5
	7	5.05	3	52808-0429	4
G	C	B	A	MATERIAL NO.	極数 CIRCUIT

注記
NOTES:

1. 使用材料 MATERIAL

ハウジング：PPS,UL94V-0	HOUSING :PPS, UL94V-0
ターミナル：リン青銅	TERMINAL :PHOSPHOR BRONZE
メッキ：ニッケル下地　錫ビスマスメッキ	PLATING :TIN-BISMUTH OVER NICKEL PLATING
テープ：ポリイミド（t＝50μm）	TAPE :PI (t=50μm)

2. 基準面 E からのソルダーテールの半田付け面のズレ量は、
上方向に0．1MAX．下方向0．15MAX．とする。
MISALIGNMENT OF SOLDER TAIL FROM E
: UPPER DIRECTION 0.1 MAX. , LOWER DIRECTION 0.15 MAX.
3. 偶数極に適用。
APPLY FOR EVEN CKT.
4. 本製品は　52808-**20　の鉛フリー品である。
THIS PRODUCT IS LEAD FREE OF 52808-**20.

ＦＰＣについて：
打抜き方向は導体側から補強板を推奨致します。
補強フィルム材質はポリイミドを推奨致します。
接着剤は熱硬化接着剤を推奨致します。
ABOUT FPC:
RECOMMENDED PUNCHER DIRECTION : FROM CONDUCTOR SIDE TO STIFFENER BOARD SIDE.
RECOMMENDED MATERIAL :
STIFFENER FILM : POLYIMIDE
BONDING AGENT : THERMOSETTING BONDING AGENT

GENERAL TOLERANCES (UNLESS SPECIFIED)			
0.25 UNDER		UNDER	±0.03
0.25 OVER	0.5	UNDER	±0.05
0.5 OVER	1.0	UNDER	±0.1
1.0 OVER	10	UNDER	±0.2
10 OVER	30	UNDER	±0.25
30 OVER			±0.3

DIMENSION UNITS	mm
SCALE	10:1
GENERAL TOLERANCES (UNLESS SPECIFIED)	
ANGULAR TOL ±	3.0 °
4 PLACES ±	
3 PLACES ±	
2 PLACES ±	
1 PLACE ±	
0 PLACES ±	
DRAFT WHERE APPLICABLE MUST REMAIN WITHIN DIMENSIONS	

THIS DRAWING CONTAINS INFORMATION THAT IS PROPRIETARY TO MOLEX ELECTRONIC TECHNOLOGIES, LLC AND SHOULD NOT BE USED WITHOUT WRITTEN PERMISSION

CURRENT REV DESC:

EC NO: 760212
DRWN: RAJMOK 2023/08/03
CHK'D: HSHIMOYAMA 2023/08/21
APPR: YNAITO 2023/08/21

INITIAL REVISION:
DRWN: MNINOMIYA 2004/02/18
APPR: MSASAO 2004/02/19

THIRD ANGLE PROJECTION | DRAWING: A3-SIZE | SERIES: 52808

molex

1.0 FFC CONN. NON ZIF
SMT ST (WITH TAPE) -LEAD FREE-

PRODUCT CUSTOMER DRAWING

DOCUMENT NUMBER	DOC TYPE	DOC PART	REVISION
SD-52808-025	PSD	001	F

MATERIAL NUMBER	CUSTOMER	SHEET NUMBER
SEE TABLE	GENERAL MARKET	1 OF 2

DOCUMENT STATUS	P1	RELEASE DATE	2023/08/21 09:52:47

FORMAT: master-tb-prod-A3
REVISION: J1
DATE: 2021/05/01

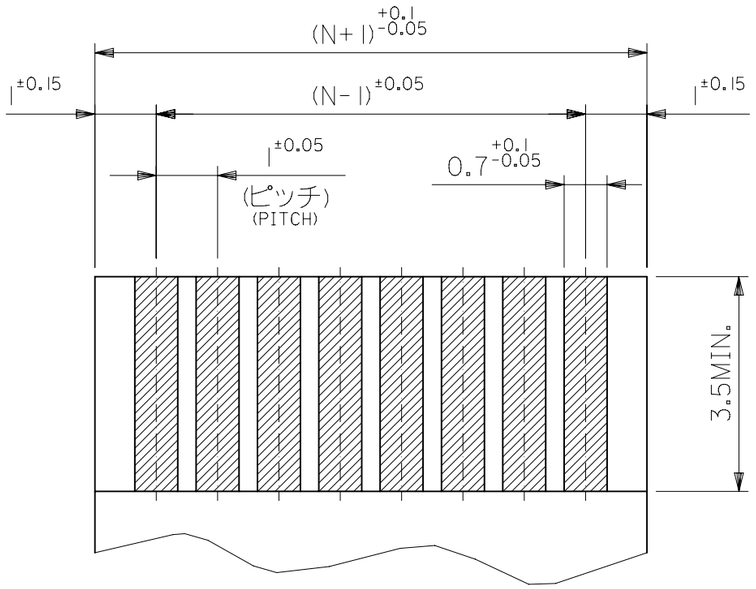

（仕上がり厚さ0.3±0.03）
THICKNESS
適合ＦＰＣ／ＦＦＣ推奨寸法
APPLICABLE FPC/FFC
RECOMMENDED DIMENSION.

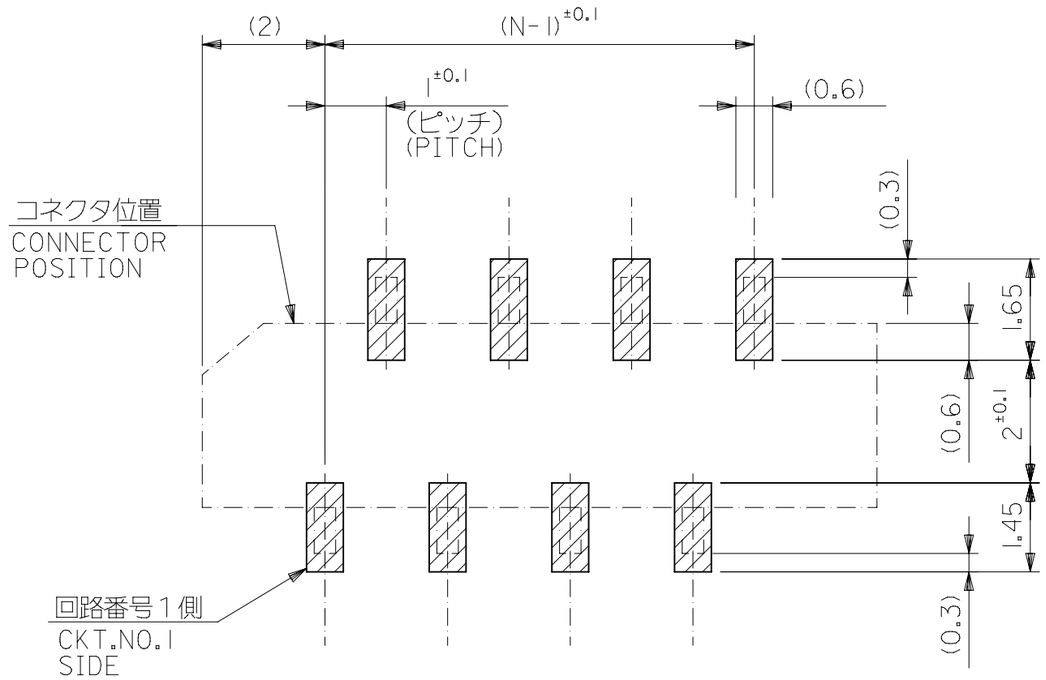

参考基板レイアウト（マウント面）
RECOMMENDED P.C.BOARD
PATTERN DIMENSION.(REF.)
(MOUNTING AREA)

THIS DRAWING CONTAINS INFORMATION THAT IS PROPRIETARY TO MOLEX ELECTRONIC TECHNOLOGIES, LLC AND SHOULD NOT BE USED WITHOUT WRITTEN PERMISSION

GENERAL TOLERANCES (UNLESS SPECIFIED)			
0.25 UNDER		UNDER	±0.03
0.25 OVER	0.5	UNDER	±0.05
0.5 OVER	1.0	UNDER	±0.1
1.0 OVER	10	UNDER	±0.2
10 OVER	30	UNDER	±0.25
30 OVER			±0.3

DIMENSION UNITS	mm
SCALE	10:1
GENERAL TOLERANCES (UNLESS SPECIFIED)	
ANGULAR TOL	± 3.0 °
4 PLACES	±
3 PLACES	±
2 PLACES	±
1 PLACE	±
0 PLACES	±
DRAFT WHERE APPLICABLE MUST REMAIN WITHIN DIMENSIONS	

CURRENT REV DESC:

EC NO: 760212
DRWN: RAJMOK 2023/08/03
CHK'D: HSHIMOYAMA 2023/08/21
APPR: YNAITO 2023/08/21

INITIAL REVISION:
DRWN: MNINOMIYA 2004/02/18
APPR: MSASAO 2004/02/19

molex

1.0 FFC CONN. NON ZIF
SMT ST (WITH TAPE) -LEAD FREE-

PRODUCT CUSTOMER DRAWING

DOCUMENT NUMBER	DOC TYPE	DOC PART	REVISION
SD-52808-025	PSD	001	F

THIRD ANGLE PROJECTION	DRAWING	SERIES	MATERIAL NUMBER	CUSTOMER	SHEET NUMBER
	A3-SIZE	52808	SEE SHEET-1	GENERAL MARKET	2 OF 2

DOCUMENT STATUS	P1	RELEASE DATE	2023/08/21 09:52:47

FORMAT: master-tb-prod-A3
REVISION: J1
DATE: 2021/05/01

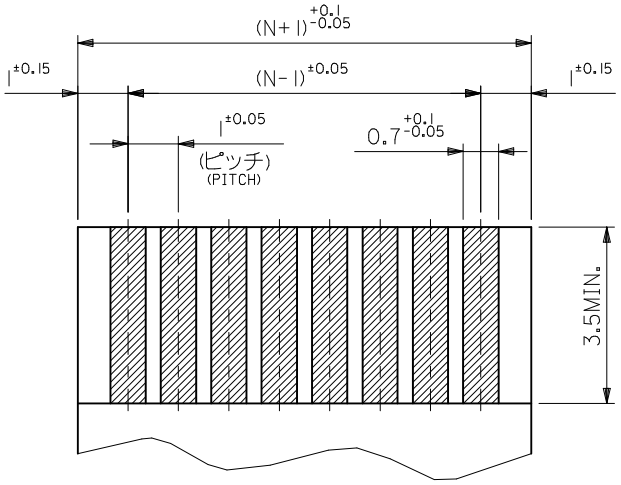

(仕上がり厚さ0．3 ±0.03 THICKNESS)

適合ＦＰＣ／ＦＦＣ推奨寸法

APPLICABLE FPC/FFC RECOMMENDED DIMENSION.

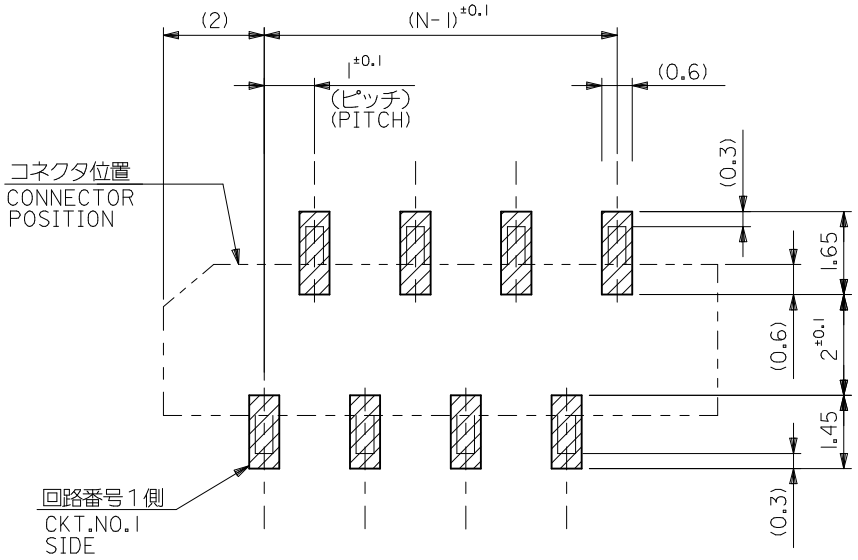

参考基板レイアウト（マウント面）

RECOMMENDED P.C.BOARD PATTERN DIMENSION.(REF.) (MOUNTING AREA)

SEE SHEET 1 OF 2

EC NO: J2015-0830 2014/12/19

DRWN:NASANUMA 2015/02/06

CH'KD:KTAKAHASHI 2015/02/23

APPR:YNOGAWA

DESCRIPTION

REV D

GENERAL TOLERANCES (UNLESS SPECIFIED)				
0.25	UNDER		UNDER	±0.03
0.25	OVER	0.5	UNDER	±0.05
0.5	OVER	1.0	UNDER	±0.1
1.0	OVER	10	UNDER	±0.2
10	OVER	30	UNDER	±0.25
30	OVER			±0.3
ANGULAR ±3 °				

DRAFT WHERE APPLICABLE MUST REMAIN WITHIN DIMENSIONS

DIMENSION STYLE	MM ONLY
SCALE	10:1
DESIGN UNITS	METRIC
	THIRD ANGLE PROJECTION
DRAWN BY / DATE	MNINOMIYA 2004/02/09
CHECKED BY / DATE	KTOJO 2004/02/09
APPROVED BY / DATE	MSASAO 2004/02/09
MATERIAL NO.	SEE SHEET 1 OF 2
TITLE	1.0 FFC CONN. NON ZIF SMT ST (WITH TAPE) -LEAD FREE-
	molex
DOCUMENT NO.	SD-52808-025
SHEET NO.	2 OF 2
SIZE	A3

THIS DRAWING CONTAINS INFORMATION THAT IS PROPRIETARY TO MOLEX INCORPORATED AND SHOULD NOT BE USED WITHOUT WRITTEN PERMISSION

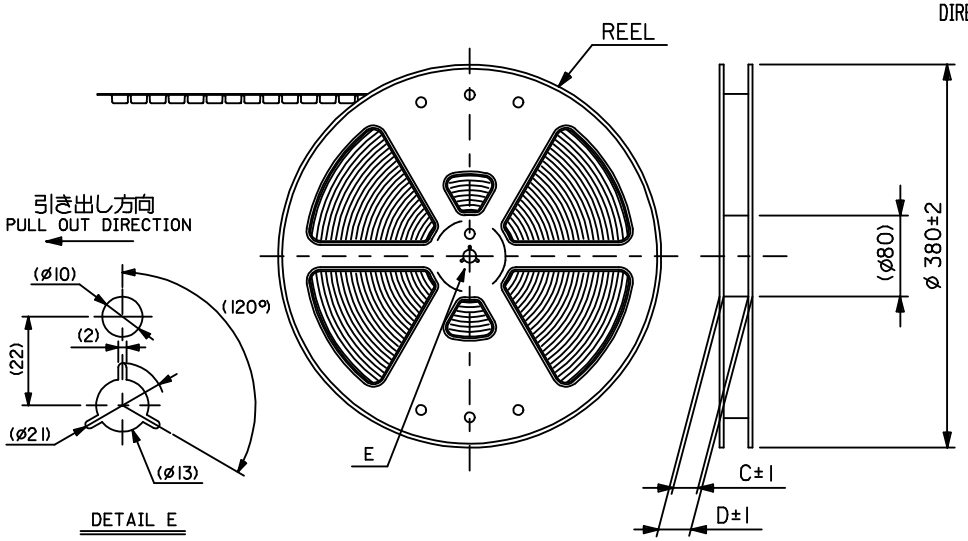

NOTES

1. 製品詳細寸法については図面 SD-52808-025 を参照下さい。
   RE DETAILED DIMENSION, SEE SD-52808-025.
2. 梱包数量：1000個／リール
   NUMBER OF CONNECTORS : 1000PCS/REEL
3. リードテープ長さ LEAD TAPE LENGTH

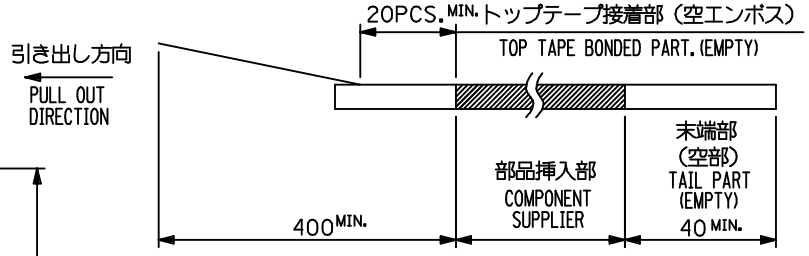

4. トップテープの剥離強度： 0.1N ～ 1.3N{10gf ～ 130gf}
   （剥離方向は下図参照）
   尚、本規格値は出荷時に適用。（但し、輸送時に剥離が発生しないこと。）
   PEELING OFF FORCE OF TOP TAPE : 0.1N ～ 1.3N{10gf ～ 130gf}
   (PEELING DIRECTION AS SHOWN IN FOLLOWING FIG.)
   THIS REQUIREMENT SHOULD BE APPLIED AT SHIPMENT.
   PEEL OFF SHOULD NOT BE ALLOWED , DURING TRANSPORTATION.

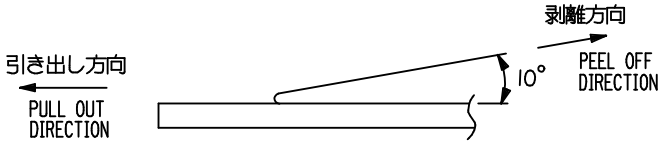

5. 材料(MATERIAL)
   キャリアテープ(CARRIER TAPE)：ポリプロピレン(POLYPROPYLENE)
   トップテープ(TOPTAPE)： PET , PE , PEF
   リール(REEL)：ポリスチレン（ＰＳ）<リサイクル材を含む>
   POLYSTYRENE(PS) <RECYCLE MATERIAL CONTAINED>

6. ＭＸＩ製造製品は紙リールを使用すること。
   ONLY MXI PRODUCT ITEM SHOULD USE CARD BOARD REEL.

7. 本製品は 52808-**91 の鉛フリー品である。
   THIS PRODUCT IS LEAD FREE OF 52808-**91.

REVISED	EC NO:	DESCRIPTION	REV
DRWN:NASANUMA	2014/12/18		
CH'KD:KTAKAHASHI	2015/02/06		
APPR:YNOGAWA	2015/02/23		
	J2015-0830		C

GENERAL TOLERANCES (UNLESS SPECIFIED)

0.25	UNDER		UNDER	±0.03
0.25	OVER	0.5	UNDER	±0.05
0.5	OVER	1.0	UNDER	±0.1
1.0	OVER	10	UNDER	±---
10	OVER	30	UNDER	±---
30	OVER			±---
ANGULAR		±--- °		

DRAFT WHERE APPLICABLE MUST REMAIN WITHIN DIMENSIONS

MODEL NO.		52808-**71	
DIMENSION STYLE: MM ONLY	SCALE: ---	DESIGN UNITS: METRIC	THIRD ANGLE PROJECTION
DRAWN BY: MNINOMIYA	DATE: 2004/02/09	TITLE: 1.0 FFC CONN NON ZIF SMT ST WITH TAPE EMBSTP PKG -LEAD FREE-	
CHECKED BY: KTOJO	DATE: 2004/02/09		
APPROVED BY	DATE	molex	
MATERIAL NO.: SEE CHART		DOCUMENT NO.: SD-52808-026	SHEET NO.: 1 OF 6
SIZE: A3		THIS DRAWING CONTAINS INFORMATION THAT IS PROPRIETARY TO MOLEX INCORPORATED AND SHOULD NOT BE USED WITHOUT WRITTEN PERMISSION	

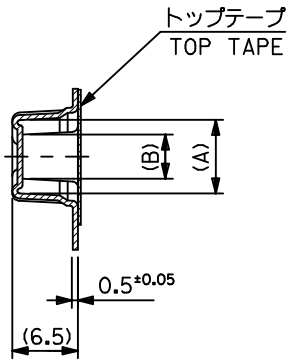

SECT:Y-Y

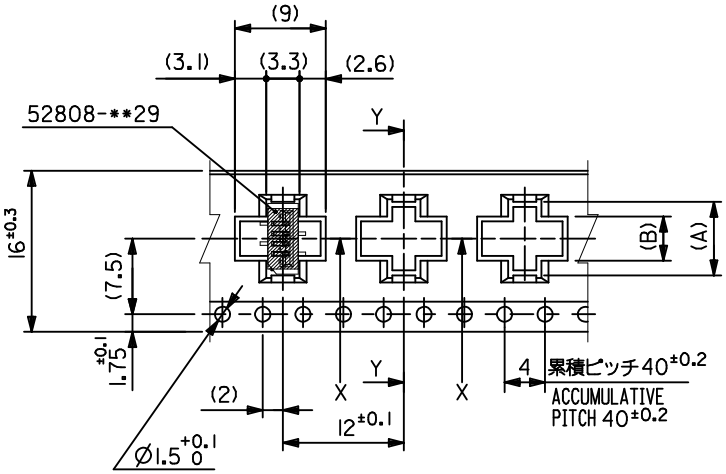

引き出し方向
PULL OUT DIRECTION

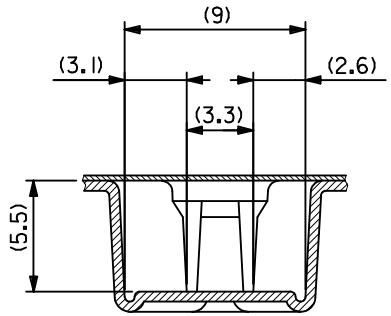

SECT:X-X

16mm幅キャリアテープ
16mm WIDTH CARRIER TAPE

16	21.4	17.4	5.4	8.3	52808-0571	5
			4.4	7.3	52808-0471	4
キャリアテープ幅 CARRIER TAPE WIDTH	D	C	(B)	(A)	MATERIAL NO.	極数 CKT.
MODEL NO.			52808-**71			

SEE SHEET 1 OF 6
EC NO: J2015-0830 2014/12/18
DRWN:NASANUMA 2015/02/06
CH'KD:KTAKAHASHI 2015/02/23
APPR:YNOGAWA
DESCRIPTION
REV

GENERAL TOLERANCES (UNLESS SPECIFIED)

0.25	UNDER	UNDER	±0.03
0.25	OVER 0.5	UNDER	±0.05
0.5	OVER 1.0	UNDER	±0.1
1.0	OVER 10	UNDER	±---
10	OVER 30	UNDER	±---
30	OVER		±---
ANGULAR	±--- °		

DRAFT WHERE APPLICABLE MUST REMAIN WITHIN DIMENSIONS

DIMENSION STYLE: MM ONLY
SCALE: ---
DESIGN UNITS: METRIC
THIRD ANGLE PROJECTION

DRAWN BY: MNINOMIYA DATE: 2004/02/09
CHECKED BY: KTOJO DATE: 2004/02/09
APPROVED BY: DATE

TITLE: 1.0 FFC CONN NON ZIF SMT ST WITH TAPE EMBSTP PKG -LEAD FREE-

molex

MATERIAL NO.: SEE CHART
DOCUMENT NO.: SD-52808-026
SHEET NO.: 2 OF 6
SIZE: A3

THIS DRAWING CONTAINS INFORMATION THAT IS PROPRIETARY TO MOLEX INCORPORATED AND SHOULD NOT BE USED WITHOUT WRITTEN PERMISSION

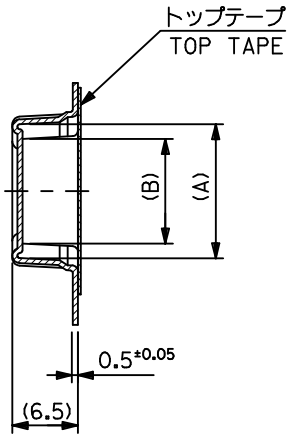

SECT:Y-Y

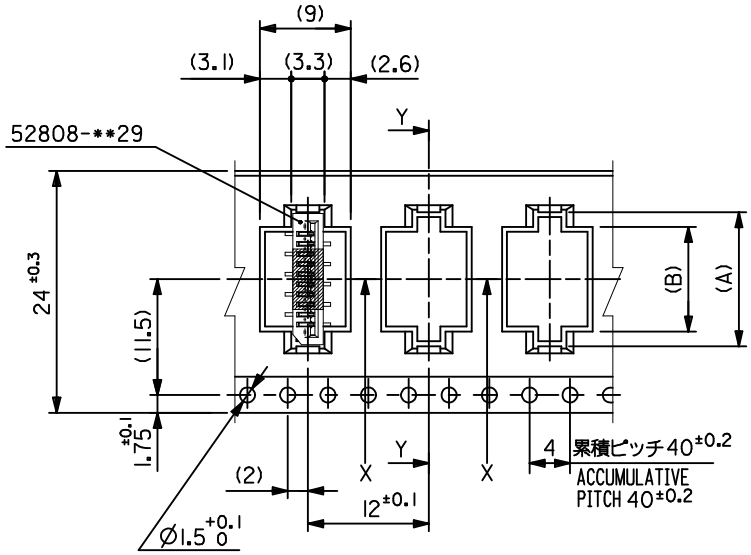

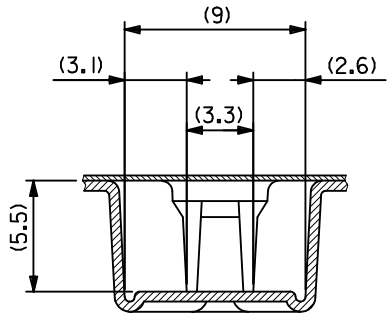

SECT:X-X

24mm幅キャリアテープ
24mm WIDTH CARRIER TAPE

キャリアテープ幅 CARRIER TAPE WIDTH	D	C	(B)	(A)	MATERIAL NO.	極数 CKT.
24	29.4	25.4	10.4	13.3	52808-1071	10
			9.4	12.3	52808-0971	9
			8.4	11.3	52808-0871	8
			7.4	10.3	52808-0771	7
			6.4	9.3	52808-0671	6
MODEL NO.			52808-**71			

SEE SHEET 1 OF 6
EC NO: J2015-0830 2014/12/18
DRWN:NASANUMA 2015/02/06
CH'KD:KTAKAHASHI 2015/02/23
APPR:YNOGAWA
DESCRIPTION
REV

GENERAL TOLERANCES (UNLESS SPECIFIED)

0.25	UNDER	UNDER	±0.03
0.25	OVER 0.5	UNDER	±0.05
0.5	OVER 1.0	UNDER	±0.1
1.0	OVER 10	UNDER	±---
10	OVER 30	UNDER	±---
30	OVER		±---
ANGULAR	±--- °		

DRAFT WHERE APPLICABLE MUST REMAIN WITHIN DIMENSIONS

DIMENSION STYLE: MM ONLY
SCALE: ---
DESIGN UNITS: METRIC
THIRD ANGLE PROJECTION

DRAWN BY: MNINOMIYA DATE: 2004/02/09
CHECKED BY: KTOJO DATE: 2004/02/09
APPROVED BY: DATE:

TITLE: 1.0 FFC CONN NON ZIF SMT ST WITH TAPE EMBSTP PKG -LEAD FREE-

molex

MATERIAL NO.: SEE CHART
DOCUMENT NO.: SD-52808-026
SHEET NO.: 3 OF 6
SIZE: A3

THIS DRAWING CONTAINS INFORMATION THAT IS PROPRIETARY TO MOLEX INCORPORATED AND SHOULD NOT BE USED WITHOUT WRITTEN PERMISSION

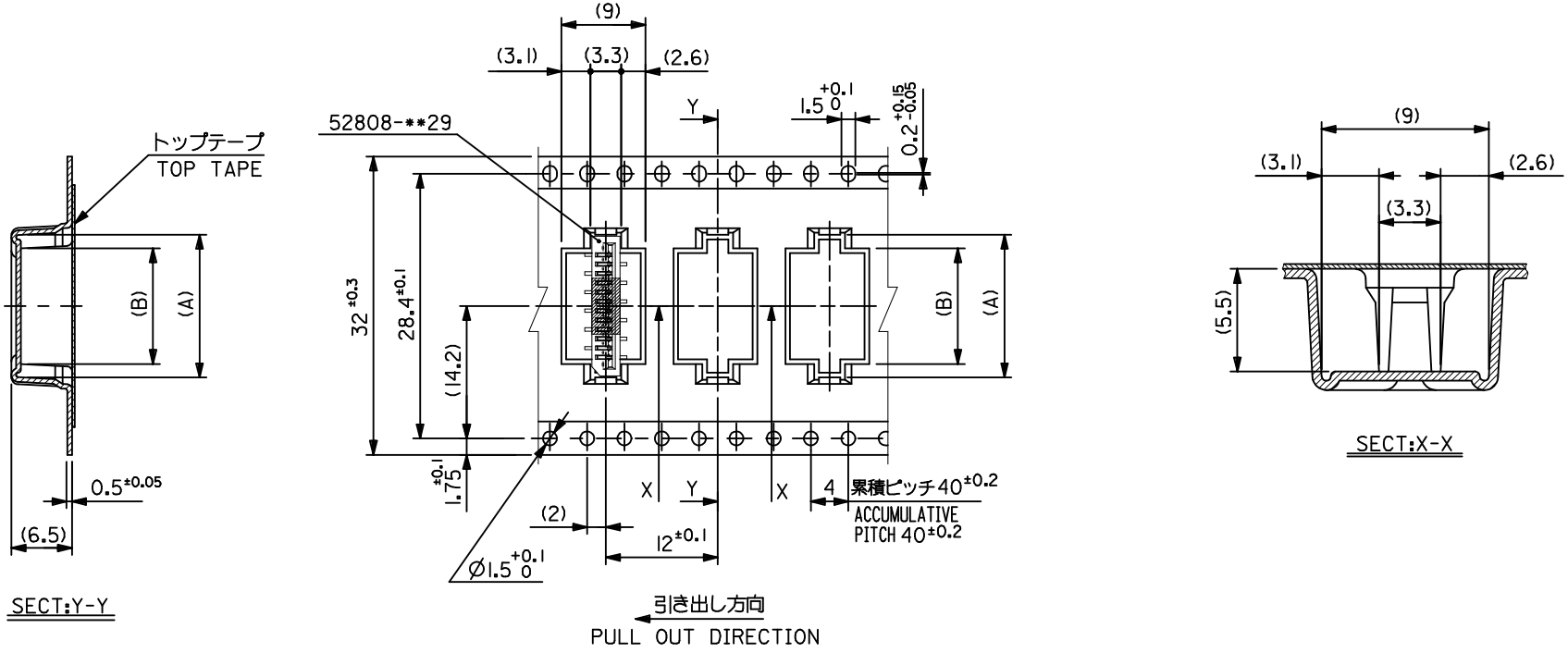

32mm幅キャリアテープ
32mm WIDTH CARRIER TAPE

キャリアテープ幅 CARRIER TAPE WIDTH	D	C	(B)	(A)	MATERIAL NO.	極数 CKT.
32	37.4	33.4	15.4	18.3	52808-1571	15
			14.4	17.3	52808-1471	14
			13.4	16.3	52808-1371	13
			12.4	15.3	52808-1271	12
			11.4	14.3	52808-1171	11
MODEL NO.			52808-**71			

SEE SHEET 1 OF 6
EC NO: J2015-0830 2014/12/18
DRWN:NASANUMA 2015/02/06
CH'KD:KTAKAHASHI 2015/02/23
APPR:YNOGAWA
DESCRIPTION
REV

GENERAL TOLERANCES (UNLESS SPECIFIED)

0.25	UNDER	UNDER	±0.03
0.25	OVER 0.5	UNDER	±0.05
0.5	OVER 1.0	UNDER	±0.1
1.0	OVER 10	UNDER	±---
10	OVER 30	UNDER	±---
30	OVER		±---
ANGULAR	±--- °		

DRAFT WHERE APPLICABLE MUST REMAIN WITHIN DIMENSIONS

DIMENSION STYLE: MM ONLY
SCALE: ---
DESIGN UNITS: METRIC
THIRD ANGLE PROJECTION

DRAWN BY: MNINOMIYA DATE: 2004/02/09
CHECKED BY: KTOJO DATE: 2004/02/09
APPROVED BY: DATE

TITLE: 1.0 FFC CONN NON ZIF SMT ST WITH TAPE EMBSTP PKG -LEAD FREE-

molex

MATERIAL NO.: SEE CHART
DOCUMENT NO.: SD-52808-026
SHEET NO.: 4 OF 6
SIZE: A3

THIS DRAWING CONTAINS INFORMATION THAT IS PROPRIETARY TO MOLEX INCORPORATED AND SHOULD NOT BE USED WITHOUT WRITTEN PERMISSION

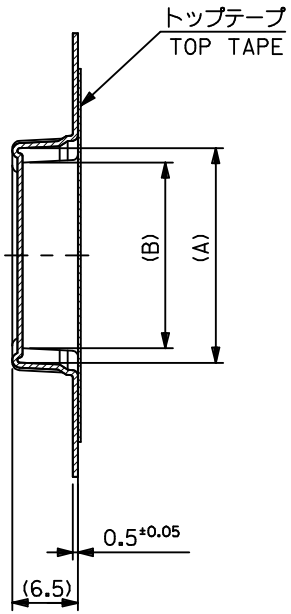

SECT:Y-Y

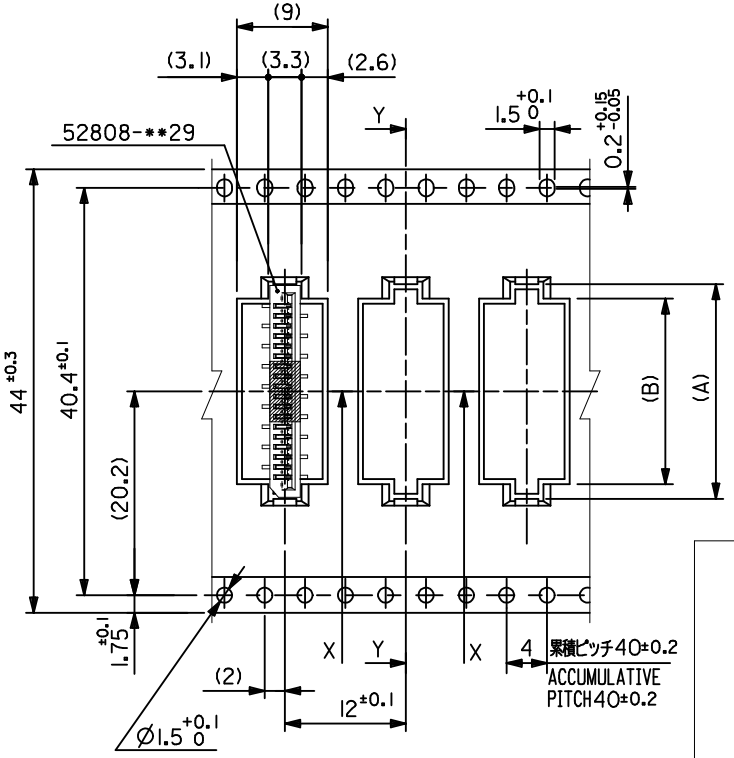

引き出し方向
PULL OUT DIRECTION

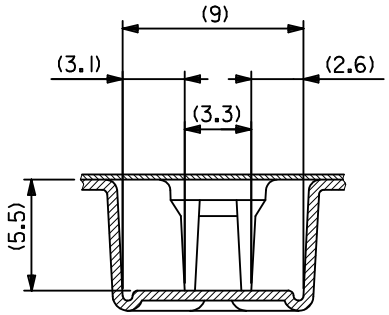

SECT:X-X

44mm幅キャリアテープ
44mm WIDTH CARRIER TAPE

キャリアテープ幅 CARRIER TAPE WIDTH	D	C	(B)	(A)	MATERIAL NO.	極数 CKT.
44	49.4	45.4	28.4	31.3	52808-2871	28
			27.4	30.3	52808-2771	27
			26.4	29.3	52808-2671	26
			25.4	28.3	52808-2571	25
			24.4	27.3	52808-2471	24
			23.4	26.3	52808-2371	23
			22.4	25.3	52808-2271	22
			21.4	24.3	52808-2171	21
			20.4	23.3	52808-2071	20
			19.4	22.3	52808-1971	19
			18.4	21.3	52808-1871	18
			17.4	20.3	52808-1771	17
			16.4	19.3	52808-1671	16
MODEL NO.			52808-**71			

SEE SHEET 1 OF 6
EC NO: J2015-0830 2014/12/18
DRWN:NASANUMA 2015/02/06
CH'KD:KTAKAHASHI 2015/02/23
APPR:YNOGAWA
DESCRIPTION
REV

GENERAL TOLERANCES (UNLESS SPECIFIED)

0.25	UNDER	UNDER	±0.03
0.25	OVER 0.5	UNDER	±0.05
0.5	OVER 1.0	UNDER	±0.1
1.0	OVER 10	UNDER	±---
10	OVER 30	UNDER	±---
30	OVER		±---
ANGULAR	±--- °		

DRAFT WHERE APPLICABLE MUST REMAIN WITHIN DIMENSIONS

DIMENSION STYLE: MM ONLY
SCALE: ---
DESIGN UNITS: METRIC
THIRD ANGLE PROJECTION

DRAWN BY: MNINOMIYA DATE: 2004/02/09
CHECKED BY: KTOJO DATE: 2004/02/09
APPROVED BY: DATE:
MATERIAL NO.: SEE CHART

TITLE: 1.0 FFC CONN NON ZIF SMT ST WITH TAPE EMBSTP PKG -LEAD FREE-

molex

DOCUMENT NO.: SD-52808-026
SHEET NO.: 5 OF 6
SIZE: A3

THIS DRAWING CONTAINS INFORMATION THAT IS PROPRIETARY TO MOLEX INCORPORATED AND SHOULD NOT BE USED WITHOUT WRITTEN PERMISSION

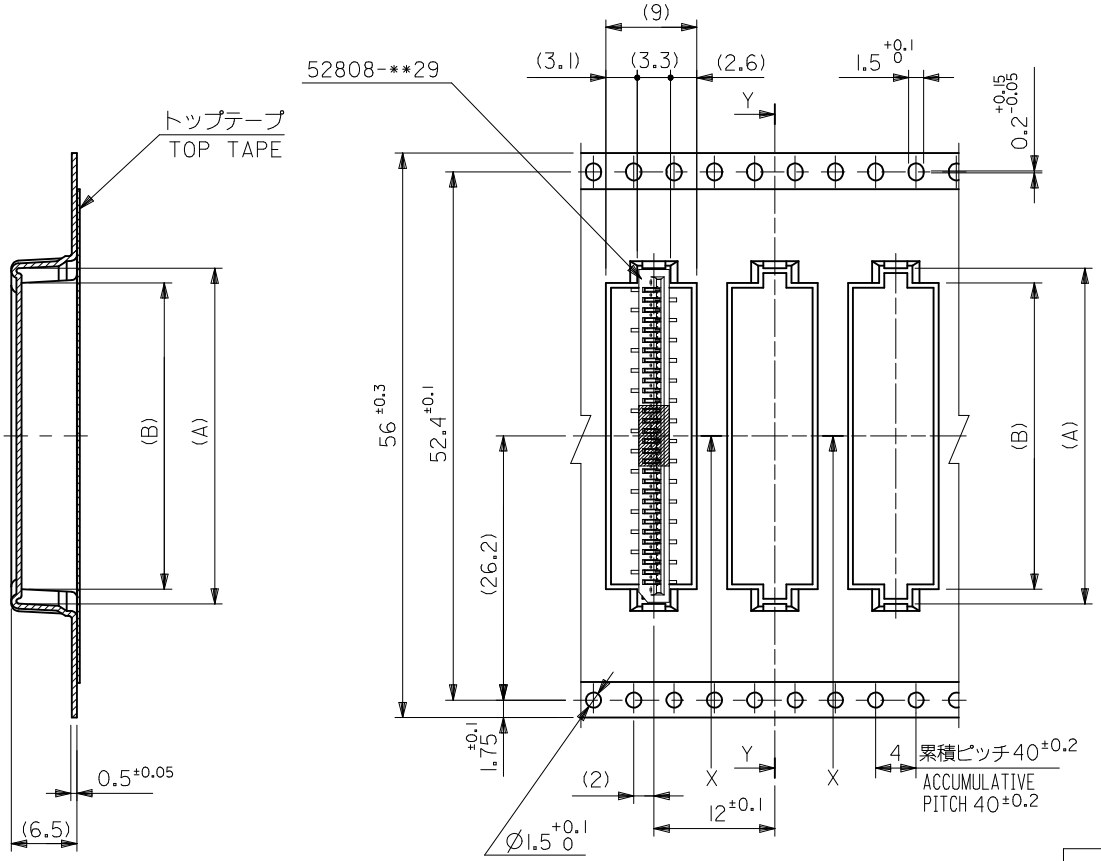

SECT:Y-Y

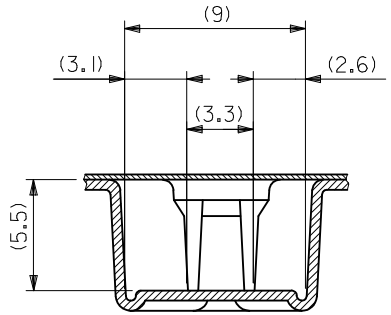

SECT:X-X

56mm幅キャリアテープ

56mm WIDTH CARRIER TAPE

56	61.4	57.4	30.4 29.4	33.3 32.3	52808-3071 52808-2971	30 29
キャリアテープ幅 CARRIER TAPE WIDTH	D	C	(B)	(A)	MATERIAL NO.	極数 CKT.
MODEL NO.			52808-**71			

SEE SHEET 1 OF 6

EC NO: J2015-0830 2014/12/18

DRWN:NASANUMA 2015/02/06

CH'KD:KTAKAHASHI 2015/02/23

APPR:YNOGAWA

DESCRIPTION

REV

GENERAL TOLERANCES (UNLESS SPECIFIED)

0.25	UNDER		UNDER	±0.03
0.25	OVER	0.5	UNDER	±0.05
0.5	OVER	1.0	UNDER	±0.1
1.0	OVER	10	UNDER	±---
10	OVER	30	UNDER	±---
30	OVER			±---
ANGULAR		±--- °		

DRAFT WHERE APPLICABLE MUST REMAIN WITHIN DIMENSIONS

DIMENSION STYLE: MM ONLY

SCALE: ---

DESIGN UNITS: METRIC

THIRD ANGLE PROJECTION

DRAWN BY: MNINOMIYA DATE: 2004/02/09

CHECKED BY: KTOJO DATE: 2004/02/09

APPROVED BY: DATE:

TITLE: 1.0 FFC CONN NON ZIF SMT ST WITH TAPE EMBSTP PKG -LEAD FREE-

molex

MATERIAL NO.: SEE CHART

DOCUMENT NO.: SD-52808-026

SHEET NO.: 6 OF 6

SIZE: A3

THIS DRAWING CONTAINS INFORMATION THAT IS PROPRIETARY TO MOLEX INCORPORATED AND SHOULD NOT BE USED WITHOUT WRITTEN PERMISSION