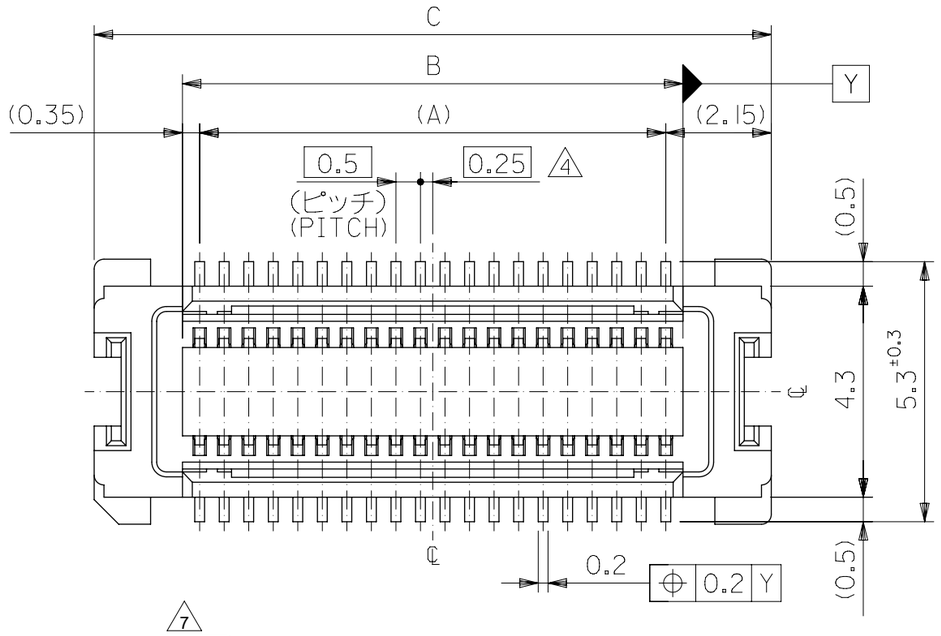

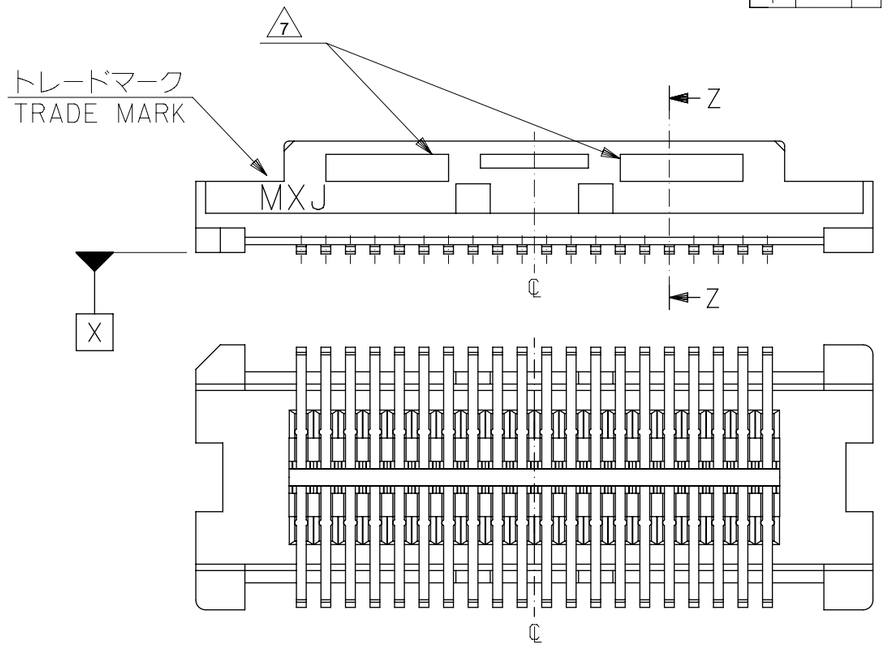

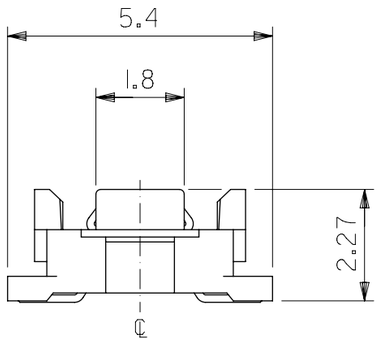

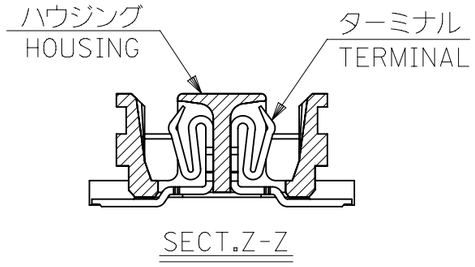

SECT.Z-Z

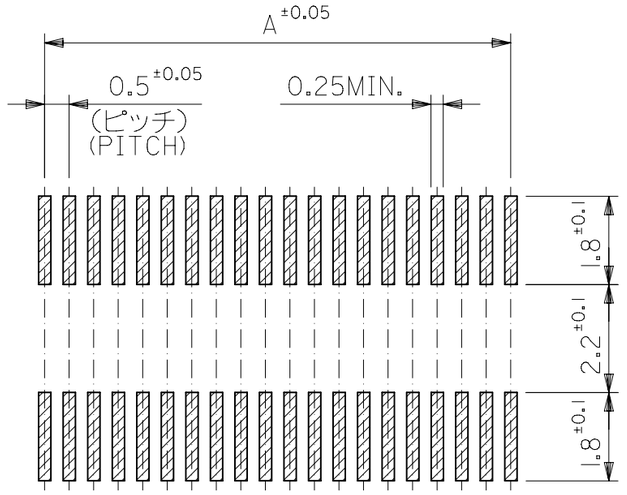

参考基板レイアウト（マウント面）

P.C.BOARD PATTERN
DIMENSION.(REF.)
(MOUNTING AREA)

23.8	20.2	19.5	52991-0808	80
21.3	17.7	17.0	52991-0708	70
18.8	15.2	14.5	52991-0608	60
16.3	12.7	12.0	52991-0508	50
13.8	10.2	9.5	52991-0408	40
11.3	7.7	7.0	52991-0308	30
8.8	5.2	4.5	52991-0208	20
C	B	A	EMBOSSED TAPE	極数 CIRCUIT
			ORDER No.	
CONNECTOR SERIES No.			52991-***0	

注記 NOTES:

1. 使用材料 MATERIAL
   ハウジング：ＬＣＰガラス入り（白）,UL94V-0
   HOUSING :LCP(G.F.)(COLOR:WHITE),UL94V-0
   ターミナル：リン青銅（t=0. 15)
   TERMINAL:PHOSPHOR BRONZE (t=0.15)
2. メッキ仕様 PLATING
   全体仕上げ：金メッキ 0.1 MICROMETER MIN.
   ALL OVER :GOLD 0.1 MICROMETER MIN.
   下地メッキ：ニッケルメッキ 1.5 MICROMETER MIN.
   UNDER PLATNG : NICKEL 1.5 MICROMETER MIN.
3. 基準面 X からのソルダーテールの半田付け面のズレ量は、上方向 0
   下方向 0.15MAX．とする。
   MISALIGNMENT OF SOLDER TAIL FROM X
   : UPPER DRECTION 0, LOWER DIRECTION 0.15 MAX.

△4 (全極数/2)＝偶数の場合に適用。
APPLY FOR (CIRCUIT/2)=EVEN.

5. 嵌合相手： 53748シリーズ (嵌合高さ = 3mm)、53916シリーズ (嵌合高さ = 4mm)、501920シリーズ (嵌合高さ = 4mm)
   MATE WITH: 53748 SERIES (HEIGHT = 3mm), 53916 SERIES (HEIGHT = 4mm), AND 501920 SERIES (HEIGHT = 4mm)
6. テール平坦度は、0.1MAX.
   TAIL COPLANARITY TO BE 0.1MAX.

△7 肉抜き形状は40極以上に存在。
THESE CORE-OUT EXIST FOR 40 CIRCUIT AND OVER.

GENERAL TOLERANCES (UNLESS SPECIFIED)	
10^{UNDER}	±0.2
$10^{OVER}30^{UNDER}$	±0.25
30^{OVER}	±0.3
ANGULAR±3°	
DRAFT WHERE APPLICABLE MUST REMAIN WITHIN DIMENSIONS	

DIMENSION UNITS	SCALE
mm	8:1

GENERAL TOLERANCES (UNLESS SPECIFIED)		
ANGULAR TOL	±	3.0 °
4 PLACES	±	0.2
3 PLACES	±	0.25
2 PLACES	±	0.3
1 PLACE	±	
0 PLACES	±	
DRAFT WHERE APPLICABLE MUST REMAIN WITHIN DIMENSIONS		

THIS DRAWING CONTAINS INFORMATION THAT IS PROPRIETARY TO MOLEX ELECTRONIC TECHNOLOGIES, LLC AND SHOULD NOT BE USED WITHOUT WRITTEN PERMISSION

CURRENT REV DESC: REVISED

EC NO: 642297
DRWN: SUDAYGUNAGI 2020/08/19
CHK'D: HSHIMOYAMA 2020/11/30
APPR: SHOSHIKAWA 2020/11/30

INITIAL REVISION:
DRWN: NAIDA 2005/08/31
APPR: NUKITA 2005/09/09

THIRD ANGLE PROJECTION | DRAWING: A3-SIZE | SERIES: 52991

molex

0.5 MM PITCH B-TO-B CONN.
HEIGHT = 3 & 4 RECEPTACLE

PRODUCT CUSTOMER DRAWING

DOCUMENT NUMBER	DOC TYPE	DOC PART	REVISION
SD-52991-004	PSD	001	G

MATERIAL NUMBER	CUSTOMER	SHEET NUMBER
SEE TABLE	GENERAL	1 OF 2

DOCUMENT STATUS	P1	RELEASE DATE	2020/11/30 03:37:32

FORMAT: master-SD-A3
REVISION: J
DATE: 2020/01/14

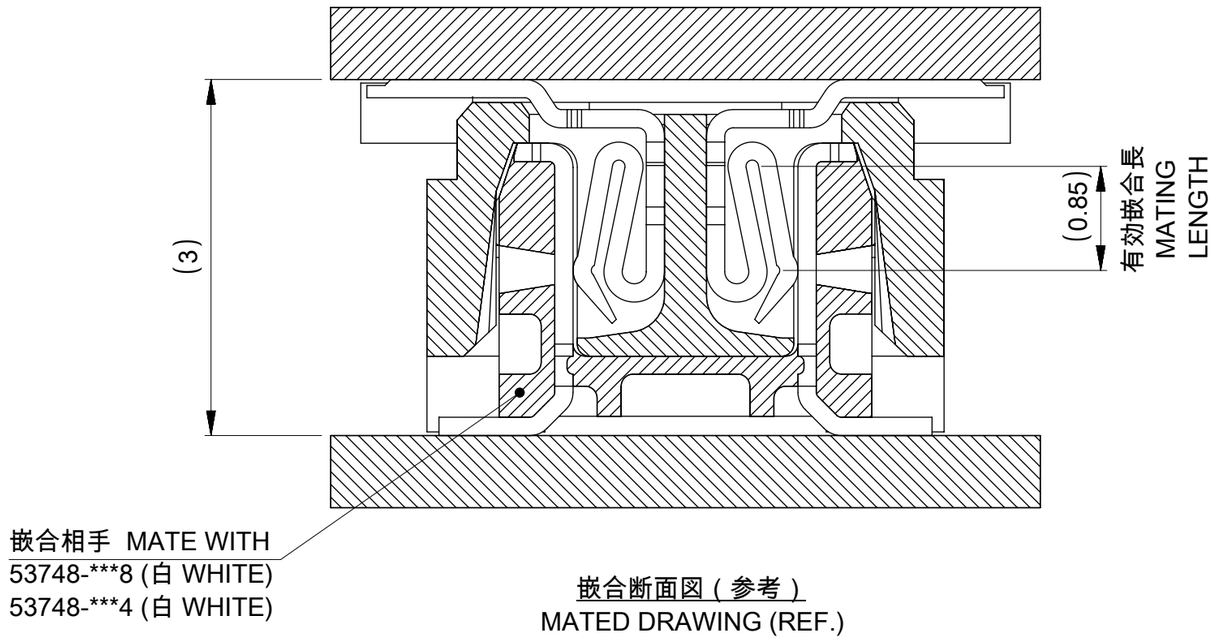

嵌合断面図（参考）
MATED DRAWING (REF.)

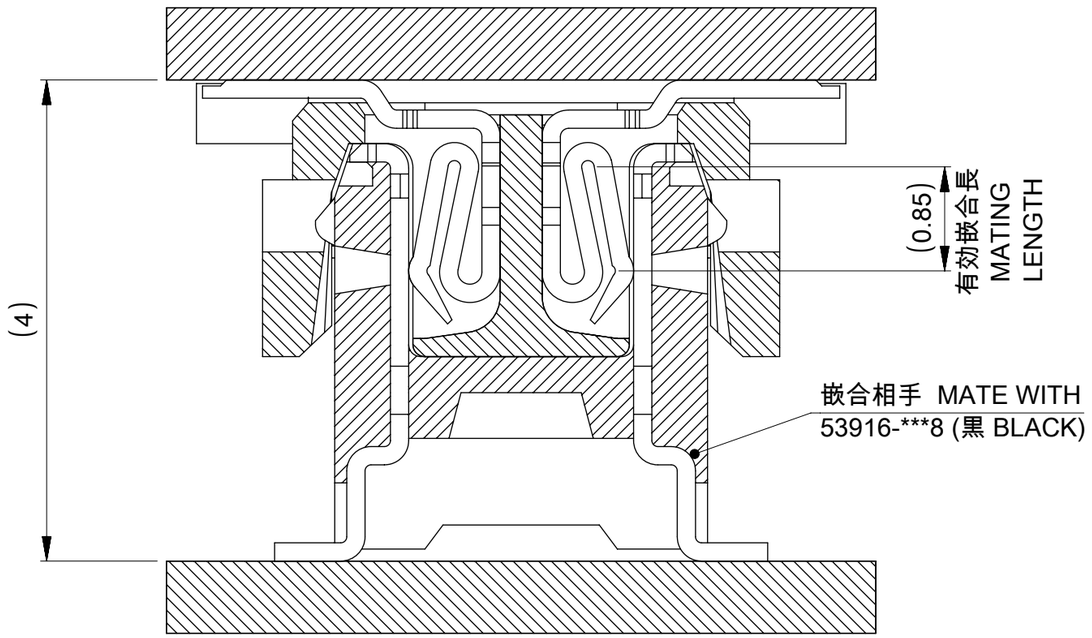

嵌合断面図（参考）
MATED DRAWING (REF.)

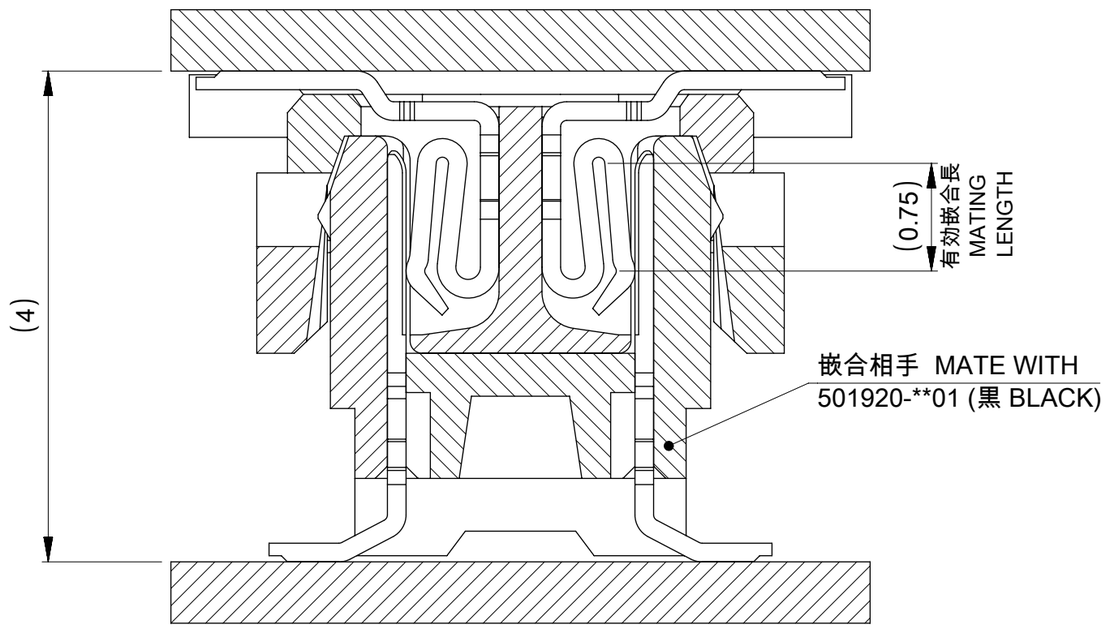

嵌合断面図（参考）
MATED DRAWING (REF.)

THIS DRAWING CONTAINS INFORMATION THAT IS PROPRIETARY TO MOLEX ELECTRONIC TECHNOLOGIES, LLC AND SHOULD NOT BE USED WITHOUT WRITTEN PERMISSION

DIMENSION UNITS	SCALE
mm	20:1

CURRENT REV DESC: REVISED

GENERAL TOLERANCES (UNLESS SPECIFIED)	
10 UNDER	±0.2
10 OVER 30 UNDER	±0.25
30 OVER	±0.3
ANGULAR±3°	
DRAFT WHERE APPLICABLE MUST REMAIN WITHIN DIMENSIONS	

GENERAL TOLERANCES (UNLESS SPECIFIED)		
ANGULAR TOL	±	3.0 °
4 PLACES	±	0.2
3 PLACES	±	0.25
2 PLACES	±	0.3
1 PLACE	±	
0 PLACES	±	
DRAFT WHERE APPLICABLE MUST REMAIN WITHIN DIMENSIONS		

EC NO: 642297
DRWN: SUDAYGUNAGI 2020/08/19
CHK'D: HSHIMOYAMA 2020/11/30
APPR: SHOSHIKAWA 2020/11/30

INITIAL REVISION:
DRWN: NAIDA 2005/08/31
APPR: NUKITA 2005/09/09

molex

0.5 MM PITCH B-TO-B CONN.
HEIGHT = 3 & 4 RECEPTACLE

PRODUCT CUSTOMER DRAWING

DOCUMENT NUMBER	DOC TYPE	DOC PART	REVISION
SD-52991-004	PSD	001	G

THIRD ANGLE PROJECTION	DRAWING	SERIES	MATERIAL NUMBER	CUSTOMER	SHEET NUMBER
	A3-SIZE	52991	SEE SHEET 1	GENERAL	2 OF 2

DOCUMENT STATUS	P1	RELEASE DATE	2020/11/30	03:37:32

FORMAT: master_tb_mod-A3
REVISION: J
DATE: 2020/01/14

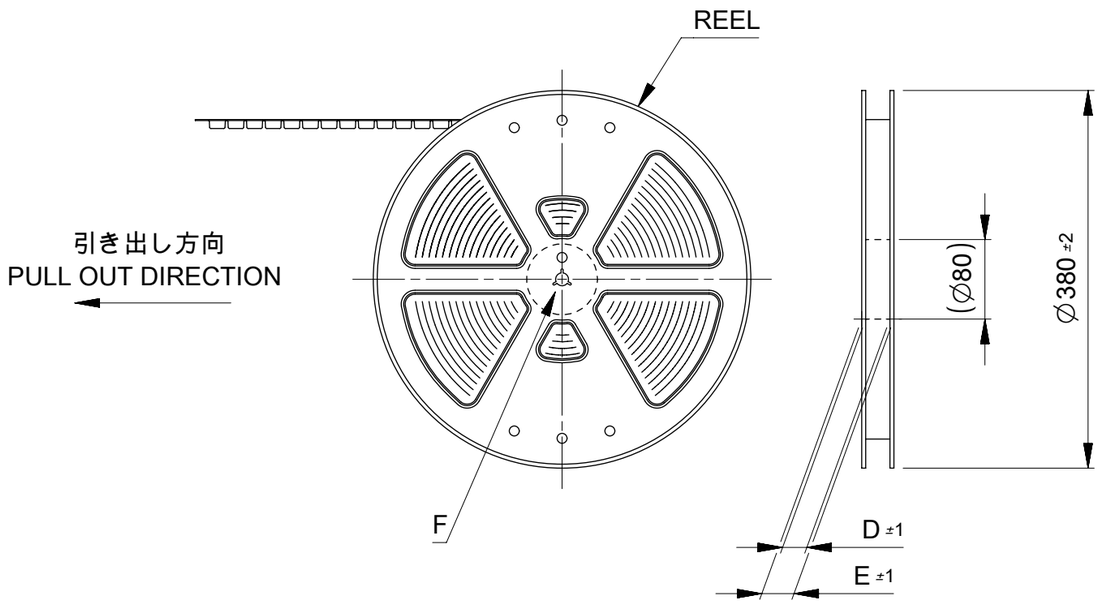

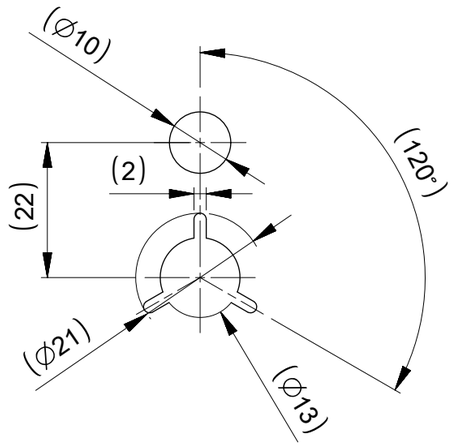

DETAIL "F"

NOTES
1. 製品詳細寸法については図面 SD-52991-004を参照下さい。
   DETAIL DIMENSION, SEE SD-52991-004
2. 梱包数量 : 3000個 / リール
   NUMBER OF CONNECTORS : 3000PCS/REEL
3. リードテープ長さ LEAD TAPE LENGTH

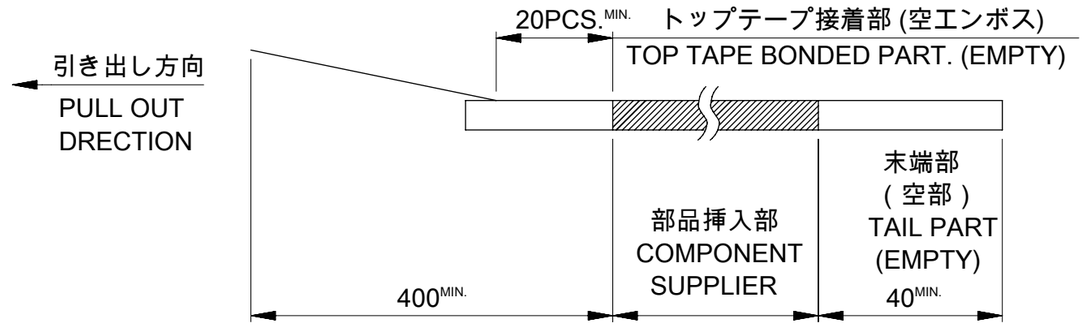

4. カバーテープの剥離強度については、IEC60286-3に準拠
   COVER TAPE PEEL FORCE IS DEFINED BY IEC60286-3.
5. 材料 (MATERIAL)
   キャリアテープ (CARRIER TAPE) : ポリプロピレン (POLYPROPYLENE)
   トップテープ (TOPTAPE) : PET , PE , PEF
   リール(REEL) : ポリスチレン (PS) <リサイクル材を含む >
   POLYSTYREN(PS) <RECYCLE MATERIAL CONTAINED>

GENERAL TOLERANCES (UNLESS SPECIFIED)	
10^{UNDER}	±0.2
$10^{OVER}30^{UNDER}$	±0.25
30^{OVER}	±0.3
ANGULAR	±3°
DRAFT WHERE APPLICABLE MUST REMAIN WITHIN DIMENSIONS	

DIMENSION UNITS	SCALE
mm	---

GENERAL TOLERANCES (UNLESS SPECIFIED)		
ANGULAR TOL	±	3.0 °
4 PLACES	±	0.2
3 PLACES	±	0.25
2 PLACES	±	0.3
1 PLACE	±	
0 PLACES	±	
DRAFT WHERE APPLICABLE MUST REMAIN WITHIN DIMENSIONS		

THIS DRAWING CONTAINS INFORMATION THAT IS PROPRIETARY TO MOLEX ELECTRONIC TECHNOLOGIES, LLC AND SHOULD NOT BE USED WITHOUT WRITTEN PERMISSION

CURRENT REV DESC: REVISED

EC NO: 649457
DRWN: SUDAYGUNAGI 2020/08/19
CHK'D: HSHIMOYAMA 2020/12/02
APPR: SHOSHIKAWA 2020/12/02

INITIAL REVISION:
DRWN: T . NIITSU 1995/10/17
APPR: M . FUKUSHIMA 2001/01/31

THIRD ANGLE PROJECTION | DRAWING: A3-SIZE | SERIES: 52991

molex

0.5 MM PITCH B-TO-B CONN.
HEIGHT = 3 & 4 RECEPTACLE EMBOSS TAPE PACKAGE

PRODUCT CUSTOMER DRAWING

DOCUMENT NUMBER	DOC TYPE	DOC PART	REVISION
SD-52991-005	PSD	001	E

MATERIAL NUMBER	CUSTOMER	SHEET NUMBER
SEE SHEET 2-6	GENERAL	1 OF 6

DOCUMENT STATUS	P1	RELEASE DATE	2020/12/02 10:53:43

FORMAT: master-lb-prod-A3
REVISION: J
DATE: 2020/01/14

引き出し方向
PULL OUT DIRECTION

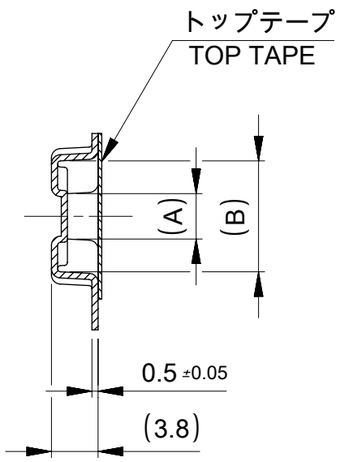

SECT:Y-Y

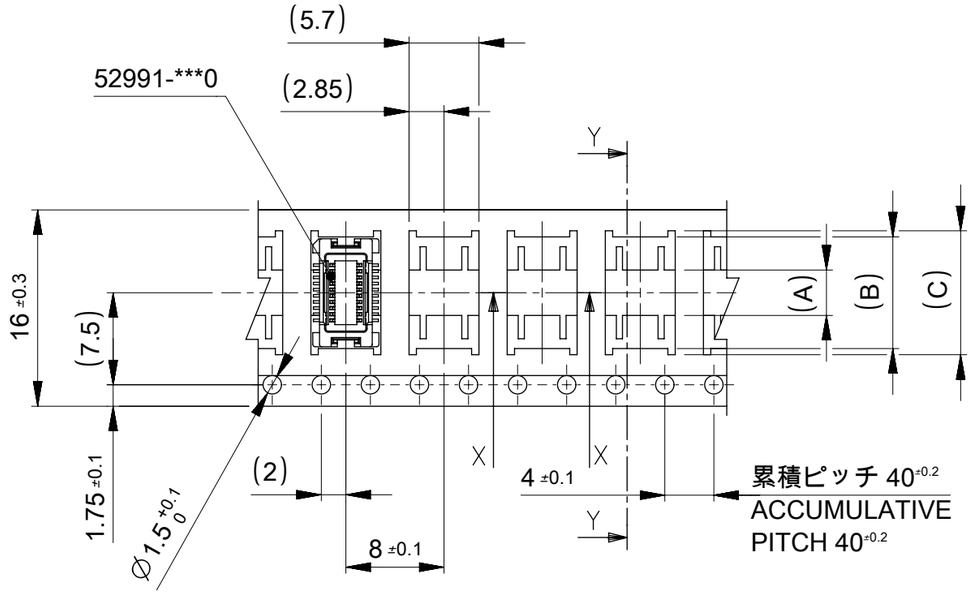

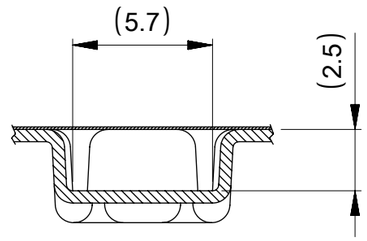

SECT:X-X
(SCALE:4-1)

16mm 幅キャリアテープ
16mm WIDTH CARRIER TAPE

16	21.4	17.4	10.1	9.1	3.7	52991-0208	20
キャリアテープ幅 CARRIER TAPE WIDTH	E	D	(C)	(B)	(A)	MATERIAL NO.	極数 CKT.

THIS DRAWING CONTAINS INFORMATION THAT IS PROPRIETARY TO MOLEX ELECTRONIC TECHNOLOGIES, LLC AND SHOULD NOT BE USED WITHOUT WRITTEN PERMISSION

DIMENSION UNITS	SCALE
mm	---

GENERAL TOLERANCES (UNLESS SPECIFIED)	
10 UNDER	±0.2
10 OVER 30 UNDER	±0.25
30 OVER	±0.3
ANGULAR	±3°
DRAFT WHERE APPLICABLE MUST REMAIN WITHIN DIMENSIONS	

GENERAL TOLERANCES (UNLESS SPECIFIED)		
ANGULAR TOL	±	3.0 °
4 PLACES	±	0.2
3 PLACES	±	0.25
2 PLACES	±	0.3
1 PLACE	±	
0 PLACES	±	
DRAFT WHERE APPLICABLE MUST REMAIN WITHIN DIMENSIONS		

CURRENT REV DESC: REVISED

EC NO: 649457
DRWN: SUDAYGUNAGI 2020/08/19
CHK'D: HSHIMOYAMA 2020/12/02
APPR: SHOSHIKAWA 2020/12/02

INITIAL REVISION:
DRWN: T . NIITSU 1995/10/17
APPR: M . FUKUSHIMA 2001/01/31

THIRD ANGLE PROJECTION | DRAWING: A3-SIZE | SERIES: 52991

molex

0.5 MM PITCH B-TO-B CONN.
HEIGHT = 3 & 4 RECEPTACLE EMBOSS TAPE PACKAGE

PRODUCT CUSTOMER DRAWING

DOCUMENT NUMBER	DOC TYPE	DOC PART	REVISION
SD-52991-005	PSD	001	E

MATERIAL NUMBER	CUSTOMER	SHEET NUMBER
SEE TABLE	GENERAL	2 OF 6

DOCUMENT STATUS	P1	RELEASE DATE	2020/12/02 10:53:43

FORMAT: master-tb-prod-A3
REVISION: J
DATE: 2020/01/14

引き出し方向
PULL OUT DIRECTION

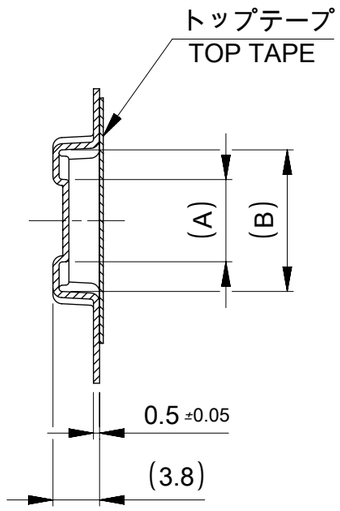

SECT:Y-Y

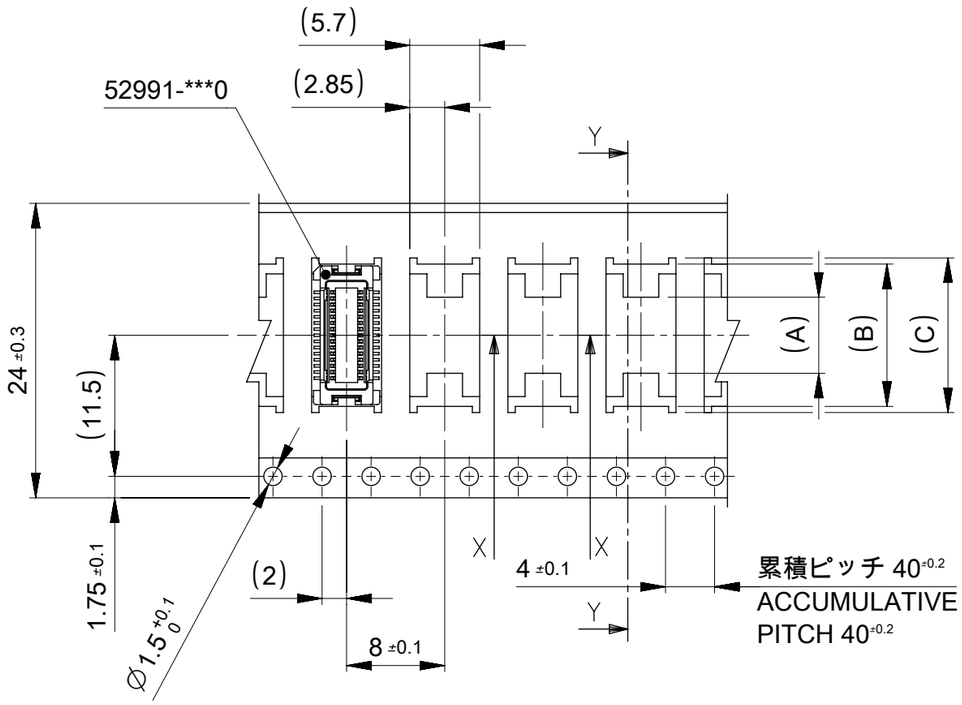

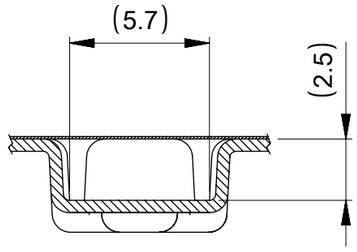

SECT:X-X
(SCALE:4-1)

24mm 幅キャリアテープ
24mm WIDTH CARRIER TAPE

24	29.4	25.4	15.1	14.1	7.4	52991-0408	40
			12.6	11.6	4.9	52991-0308	30
キャリアテープ幅 CARRIER TAPE WIDTH	E	D	(C)	(B)	(A)	MATERIAL NO.	極数 CKT.

THIS DRAWING CONTAINS INFORMATION THAT IS PROPRIETARY TO MOLEX ELECTRONIC TECHNOLOGIES, LLC AND SHOULD NOT BE USED WITHOUT WRITTEN PERMISSION

GENERAL TOLERANCES (UNLESS SPECIFIED)	
10^{UNDER}	±0.2
$10^{OVER}30^{UNDER}$	±0.25
30^{OVER}	±0.3
ANGULAR	±3°
DRAFT WHERE APPLICABLE MUST REMAIN WITHIN DIMENSIONS	

GENERAL TOLERANCES (UNLESS SPECIFIED)	
ANGULAR TOL	± 3.0 °
4 PLACES	± 0.2
3 PLACES	± 0.25
2 PLACES	± 0.3
1 PLACE	±
0 PLACES	±
DRAFT WHERE APPLICABLE MUST REMAIN WITHIN DIMENSIONS	

DIMENSION UNITS: mm
SCALE: ---

CURRENT REV DESC: REVISED

EC NO: 649457
DRWN: SUDAYGUNAGI 2020/08/19
CHK'D: HSHIMOYAMA 2020/12/02
APPR: SHOSHIKAWA 2020/12/02

INITIAL REVISION:
DRWN: T . NIITSU 1995/10/17
APPR: M . FUKUSHIMA 2001/01/31

THIRD ANGLE PROJECTION | DRAWING: A3-SIZE | SERIES: 52991

molex

0.5 MM PITCH B-TO-B CONN.
HEIGHT = 3 & 4 RECEPTACLE EMBOSS TAPE PACKAGE

PRODUCT CUSTOMER DRAWING

DOCUMENT NUMBER	DOC TYPE	DOC PART	REVISION
SD-52991-005	PSD	001	E

MATERIAL NUMBER	CUSTOMER	SHEET NUMBER
SEE TABLE	GENERAL	3 OF 6

DOCUMENT STATUS	P1	RELEASE DATE	2020/12/02 10:53:43

FORMAT: master-tb-prod-A3
REVISION: J
DATE: 2020/01/14

引き出し方向
PULL OUT DIRECTION

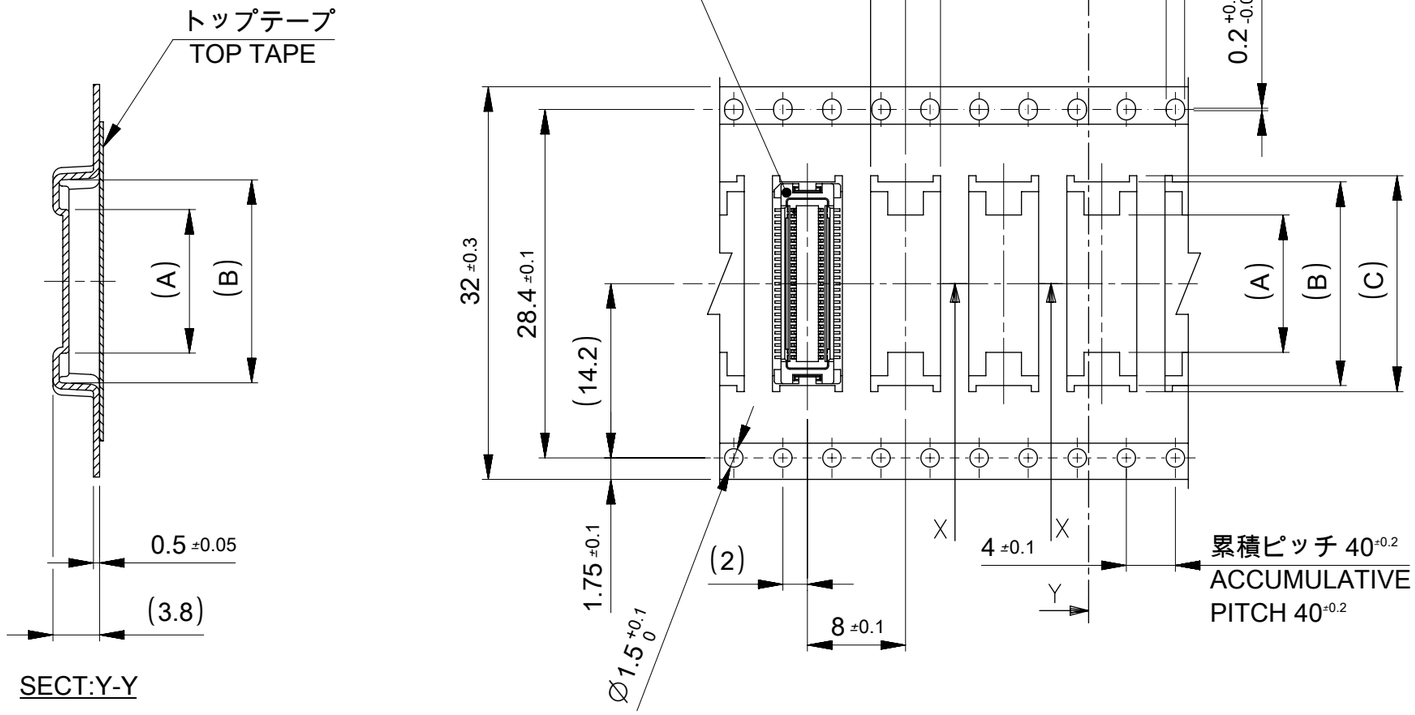

SECT:Y-Y

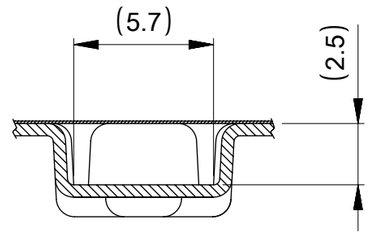

SECT:X-X
(SCALE:4-1)

32mm 幅キャリアテープ
32mm WIDTH CARRIER TAPE

32	37.4	33.4	17.6	16.6	11.2	52991-0508	50
キャリアテープ幅 CARRIER TAPE WIDTH	E	D	(C)	(B)	(A)	MATERIAL NO.	極数 CKT.

THIS DRAWING CONTAINS INFORMATION THAT IS PROPRIETARY TO MOLEX ELECTRONIC TECHNOLOGIES, LLC AND SHOULD NOT BE USED WITHOUT WRITTEN PERMISSION

GENERAL TOLERANCES (UNLESS SPECIFIED)	
10 UNDER	±0.2
10 OVER 30 UNDER	±0.25
30 OVER	±0.3
ANGULAR	±°

DRAFT WHERE APPLICABLE MUST REMAIN WITHIN DIMENSIONS

GENERAL TOLERANCES (UNLESS SPECIFIED)		
ANGULAR TOL	±	3.0 °
4 PLACES	±	0.2
3 PLACES	±	0.25
2 PLACES	±	0.3
1 PLACE	±	
0 PLACES	±	

DRAFT WHERE APPLICABLE MUST REMAIN WITHIN DIMENSIONS

DIMENSION UNITS: mm
SCALE: ---

CURRENT REV DESC: REVISED

EC NO: 649457
DRWN: SUDAYGUNAGI 2020/08/19
CHK'D: HSHIMOYAMA 2020/12/02
APPR: SHOSHIKAWA 2020/12/02

INITIAL REVISION:
DRWN: T . NIITSU 1995/10/17
APPR: M . FUKUSHIMA 2001/01/31

THIRD ANGLE PROJECTION | DRAWING: A3-SIZE | SERIES: 52991

molex

0.5 MM PITCH B-TO-B CONN.
HEIGHT = 3 & 4 RECEPTACLE EMBOSS TAPE PACKAGE

PRODUCT CUSTOMER DRAWING

DOCUMENT NUMBER	DOC TYPE	DOC PART	REVISION
SD-52991-005	PSD	001	E

MATERIAL NUMBER	CUSTOMER	SHEET NUMBER
SEE TABLE	GENERAL	4 OF 6

DOCUMENT STATUS	P1	RELEASE DATE	2020/12/02 10:53:43

FORMAT: master-lb-prod-A3
REVISION: J
DATE: 2020/01/14

引き出し方向
PULL OUT DIRECTION

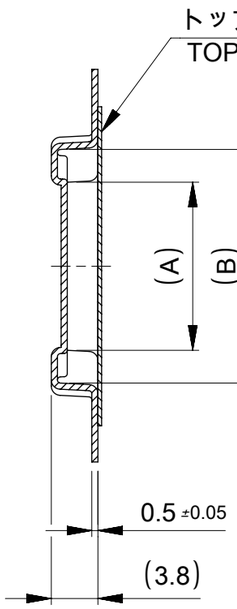

SECT:Y-Y

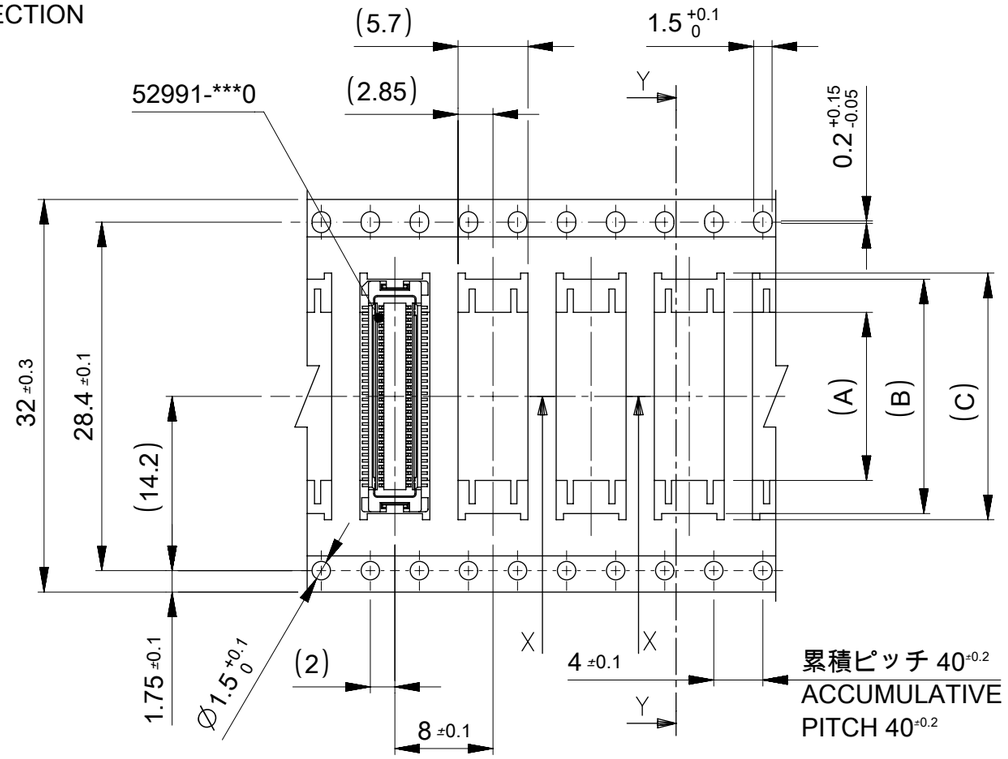

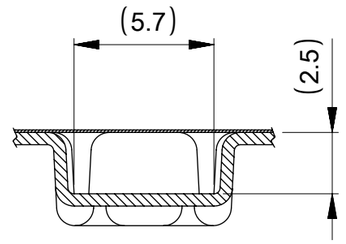

SECT:X-X
(SCALE:4-1)

32mm 幅キャリアテープ
32mm WIDTH CARRIER TAPE

32	37.4	33.4	20.1	19.1	13.7	52991-0608	60
キャリアテープ幅 CARRIER TAPE WIDTH	E	D	(C)	(B)	(A)	MATERIAL NO.	極数 CKT.

THIS DRAWING CONTAINS INFORMATION THAT IS PROPRIETARY TO MOLEX ELECTRONIC TECHNOLOGIES, LLC AND SHOULD NOT BE USED WITHOUT WRITTEN PERMISSION

GENERAL TOLERANCES (UNLESS SPECIFIED)	
10 UNDER	±0.2
10 OVER 30 UNDER	±0.25
30 OVER	±0.3
ANGULAR	±3°

DRAFT WHERE APPLICABLE MUST REMAIN WITHIN DIMENSIONS

GENERAL TOLERANCES (UNLESS SPECIFIED)	
ANGULAR TOL	± 3.0 °
4 PLACES	± 0.2
3 PLACES	± 0.25
2 PLACES	± 0.3
1 PLACE	±
0 PLACES	±

DRAFT WHERE APPLICABLE MUST REMAIN WITHIN DIMENSIONS

DIMENSION UNITS: mm
SCALE: ---

CURRENT REV DESC: REVISED

EC NO: 649457
DRWN: SUDAYGUNAGI 2020/08/19
CHK'D: HSHIMOYAMA 2020/12/02
APPR: SHOSHIKAWA 2020/12/02

INITIAL REVISION:
DRWN: T . NIITSU 1995/10/17
APPR: M . FUKUSHIMA 2001/01/31

molex

0.5 MM PITCH B-TO-B CONN.
HEIGHT = 3 & 4 RECEPTACLE EMBOSS TAPE PACKAGE

PRODUCT CUSTOMER DRAWING

DOCUMENT NUMBER	DOC TYPE	DOC PART	REVISION
SD-52991-005	PSD	001	E

THIRD ANGLE PROJECTION	DRAWING	SERIES	MATERIAL NUMBER	CUSTOMER	SHEET NUMBER
	A3-SIZE	52991	SEE TABLE	GENERAL	5 OF 6

DOCUMENT STATUS	P1	RELEASE DATE	2020/12/02 10:53:43

FORMAT: master-tb-prod-A3
REVISION: J
DATE: 2020/01/14

引き出し方向
PULL OUT DIRECTION

トップテープ
TOP TAPE

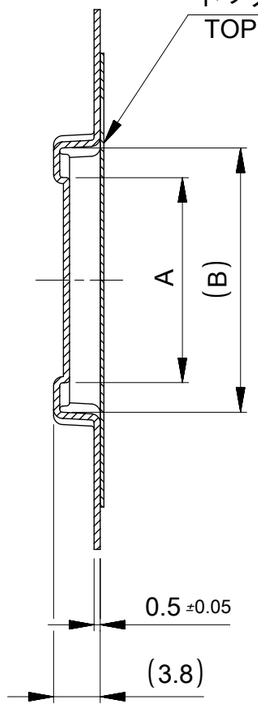

SECT:Y-Y

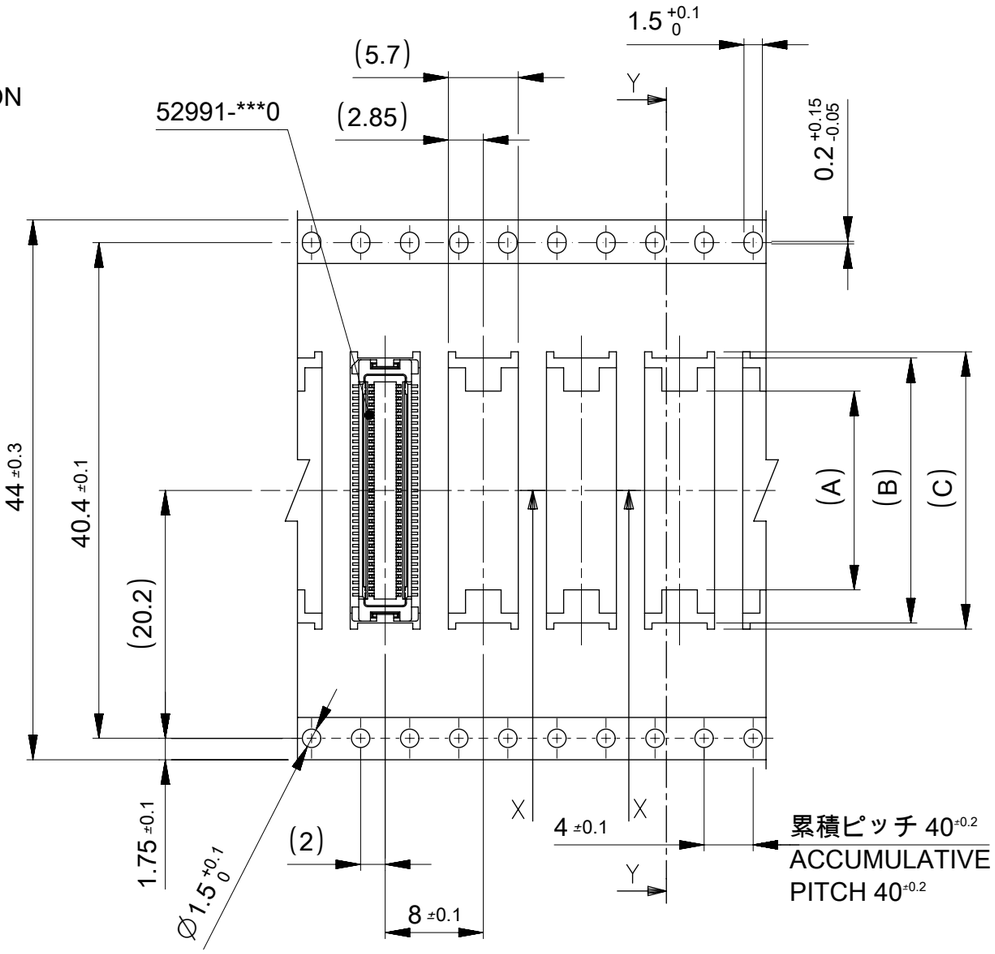

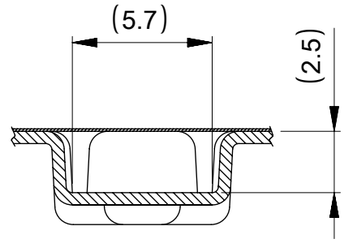

SECT:X-X
(SCALE:4-1)

44mm 幅キャリアテープ
44mm WIDTH CARRIER TAPE

キャリアテープ幅 CARRIER TAPE WIDTH	E	D	(C)	(B)	(A)	MATERIAL NO.	極数 CKT.
44	49.4	45.4	25.1	24.1	18.7	52991-0808	80
			22.6	21.6	16.2	52991-0708	70

THIS DRAWING CONTAINS INFORMATION THAT IS PROPRIETARY TO MOLEX ELECTRONIC TECHNOLOGIES, LLC AND SHOULD NOT BE USED WITHOUT WRITTEN PERMISSION

DIMENSION UNITS	SCALE
mm	---

GENERAL TOLERANCES (UNLESS SPECIFIED)	
10 UNDER	±0.2
10 OVER 30 UNDER	±0.25
30 OVER	±0.3
ANGULAR±3°	
DRAFT WHERE APPLICABLE MUST REMAIN WITHIN DIMENSIONS	

GENERAL TOLERANCES (UNLESS SPECIFIED)	
ANGULAR TOL	± 30 '
4 PLACES	± 0.2
3 PLACES	± 0.25
2 PLACES	± 0.3
1 PLACE	±
0 PLACES	±
DRAFT WHERE APPLICABLE MUST REMAIN WITHIN DIMENSIONS	

CURRENT REV DESC: REVISED

EC NO: 649457
DRWN: SUDAYGUNAGI 2020/08/19
CHK'D: HSHIMOYAMA 2020/12/02
APPR: SHOSHIKAWA 2020/12/02

INITIAL REVISION:
DRWN: T . NIITSU 1995/10/17
APPR: M . FUKUSHIMA 2001/01/31

THIRD ANGLE PROJECTION | DRAWING: A3-SIZE | SERIES: 52991

molex

0.5 MM PITCH B-TO-B CONN.
HEIGHT = 3 & 4 RECEPTACLE EMBOSS TAPE PACKAGE

PRODUCT CUSTOMER DRAWING

DOCUMENT NUMBER	DOC TYPE	DOC PART	REVISION
SD-52991-005	PSD	001	E

MATERIAL NUMBER	CUSTOMER	SHEET NUMBER
SEE TABLE	GENERAL	6 OF 6

DOCUMENT STATUS	P1	RELEASE DATE	2020/12/02 10:53:43

FORMAT: master-lb-prod-A3
REVISION: J
DATE: 2020/01/14