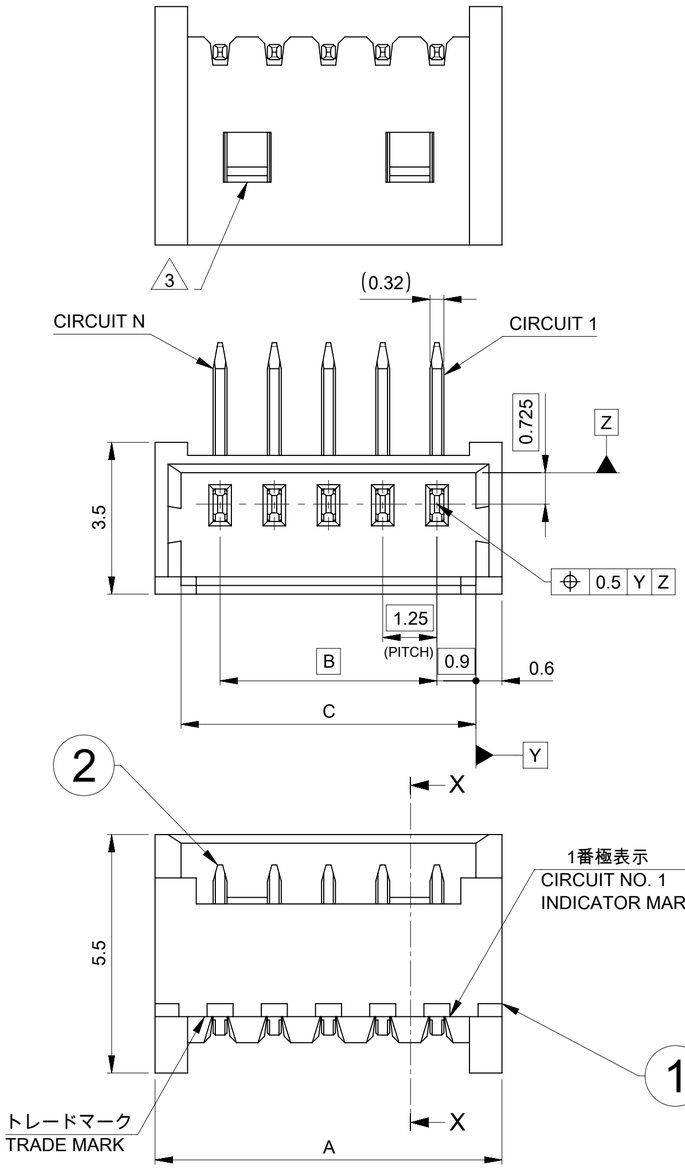

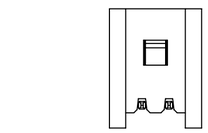

2, 3極形状 (1ロック)
FIGURE OF 2, 3 CIRCUIT (1 LOCK)

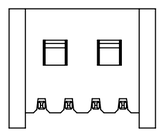

4~15極形状 (2ロック)
FIGURE OF 4-15 CIRCUIT (2 LOCKS)

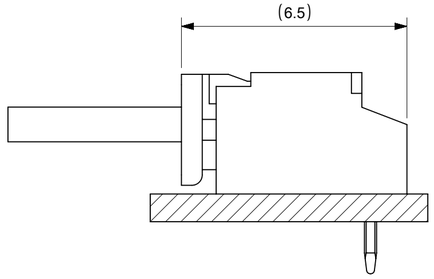

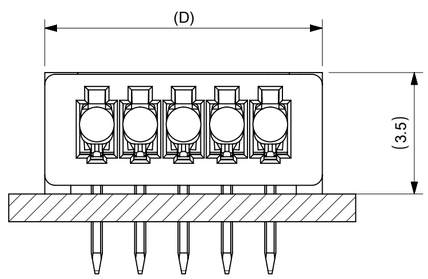

1 嵌合図
MATED CONNECTORES

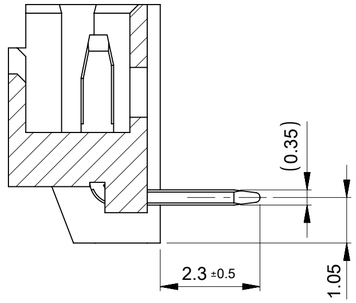

SECTION X-X

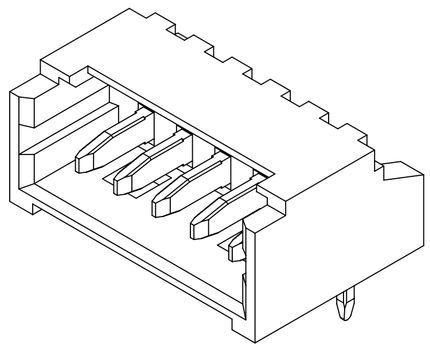

(公差非累積)
(NON-ACCUMULATE)

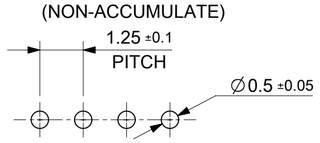

基板取付穴推奨寸法 (t=0.8)
RECOMMENDED PCB HOLE DIMENSION (t=0.8)

注記 NOTES

1. 材料及び仕上げ (めっき仕様) : TABLE 1参照
   MATERIAL AND FINISHES: SEE TABLE 1
2. 適合製品及び各種仕様書はSHEET 2 をご参考ください。
   PLEASE REFER TO SHEET 2 FOR APPLICABLE PRODUCTS AND VARIOUS SPECIFICATIONS.
3. ロック窓 LOCKING WINDOW:
   ロック窓は、2、3極では1ヶ所、4極以上では2ヶ所とする。
   ONE PLACE FOR 2 AND 3 CIRCUIT.
   TWO PLACES FOR 4 CIRCUIT AND MORE.
4. 本製品はすずめっき品です。金めっき品は530480000-SDをご参照ください。
   THIS PRODUCT IS TIN PLATING TYPE.
   PLEASE REFER TO 530480000-SD FOR GOLD PLATING TYPE.
5. 発注番号
   ORDER NO. 53048**10
   - 極数 CIRCUIT

1 TABLE1

番号 NO.	部品 PART	材質 MATERIAL	
①	ハウジング HOUSING	ポリアミド(PA), UL94V-0, 色：ナチュラル (ホワイト) POLYAMIDE(PA), UL94V-0, COLOR：NATURAL (WHITE)	
②	ターミナル TERMINAL	母材 MATERIAL	りん青銅 PHOSPHOR BRONZE
		コンタクト部 CONTACT AREA	無光沢錫めっき 0.9 MICRO-METER MIN. (リフロー処理、前めっき)
		テール部 TAIL AREA	MATTE TIN PLATING 0.9 MICRO-METER MIN. (REFLOW TREATMENT, PRE-PLATING)

DOCUMENT STATUS	P1	RELEASE DATE	2022/04/19 08:41:23

D	C	B	A	5 オーダー番号 ORDER NO.	極数 CIRCUIT
20.5	19.3	17.5	20.5	530481510	15
19.25	18.05	16.25	19.25	530481410	14
18	16.8	15	18	530481310	13
16.75	15.55	13.75	16.75	530481210	12
15.5	14.3	12.5	15.5	530481110	11
14.25	13.05	11.25	14.25	530481010	10
13	11.8	10	13	530480910	9
11.75	10.55	8.75	11.75	530480810	8
10.5	9.3	7.5	10.5	530480710	7
9.25	8.05	6.25	9.25	530480610	6
8	6.8	5	8	530480510	5
6.75	5.55	3.75	6.75	530480410	4
5.5	4.3	2.5	5.5	530480310	3
4.25	3.05	1.25	4.25	530480210	2
				梱包形態：トレイ梱包 PACKAGING: PLASTIC TRAY	

THIS DRAWING CONTAINS INFORMATION THAT IS PROPRIETARY TO MOLEX ELECTRONIC TECHNOLOGIES, LLC AND SHOULD NOT BE USED WITHOUT WRITTEN PERMISSION

DIMENSION UNITS	SCALE
mm	NTS

GENERAL TOLERANCES (UNLESS SPECIFIED)

ANGULAR TOL	±	3.0 °
4 PLACES	±	0.2
3 PLACES	±	0.2
2 PLACES	±	0.2
1 PLACE	±	0.2
0 PLACES	±	0.2

DRAFT WHERE APPLICABLE MUST REMAIN WITHIN DIMENSIONS

CURRENT REV DESC: REVISED

EC NO: 698818
DRWN: HHUSSIN 2022/02/16
CHK'D: SAKIYAMA 2022/04/19
APPR: AIDA 2022/04/19

INITIAL REVISION:
DRWN: SOBARA01 2019/09/26
APPR: AIDA 2019/10/15

molex

PICOBLADE 1.25
HEADER ASSY DIP R/A TIN PLATING TYPE

PRODUCT CUSTOMER DRAWING

DOCUMENT NUMBER	DOC TYPE	DOC PART	REVISION
530480001-SD	PSD	000	B

THIRD ANGLE PROJECTION	DRAWING	SERIES	MATERIAL NUMBER	CUSTOMER	SHEET NUMBER
	A2-SIZE	53048	SEE CHART	GENERAL	1 OF 2

△2 適合製品及び各種仕様書
APPLICABLE PRODUCTS AND SPECIFICATIONS

梱包仕様書 PACKING SPECIFICATION		PART NUMBER		SPECIFICATION NUMBER	
		53048**10		SPK-53048-001	
適合ハウジング APPLICABLE HOUSING		PART NUMBER			
		51021**00			
適合圧着端子 APPLICABLE TERMINAL	PLATING	TIN			
	PART NUMBER	500798*00	500588*00	500798001	500588001
	WIRE SIZE (AWG)	#26-28	#28-32	#26-28	#28-32
製品仕様書 PRODUCT SPECIFICATION		PS-51021-010 PS 001		510211111-PS PS 000	
アプリケーション仕様書 (取扱説明書) APPLICATION SPECIFICATION		510210000-AS PS 000			

THIS DRAWING CONTAINS INFORMATION THAT IS PROPRIETARY TO MOLEX ELECTRONIC TECHNOLOGIES, LLC AND SHOULD NOT BE USED WITHOUT WRITTEN PERMISSION

DIMENSION UNITS	SCALE
mm	NTS

GENERAL TOLERANCES (UNLESS SPECIFIED)

ANGULAR TOL	±	3.0 °
4 PLACES	±	0.2
3 PLACES	±	0.2
2 PLACES	±	0.2
1 PLACE	±	0.2
0 PLACES	±	0.2

DRAFT WHERE APPLICABLE MUST REMAIN WITHIN DIMENSIONS

CURRENT REV DESC: REVISED

EC NO: 698818

DRWN:	HHUSSIN	2022/02/16
CHK'D:	SAKIYAMA	2022/04/19
APPR:	AIDA	2022/04/19

INITIAL REVISION:

DRWN:	SOBARA01	2019/09/26
APPR:	AIDA	2019/10/15

molex

PICOBLADE 1.25
HEADER ASSY DIP R/A TIN PLATING TYPE

PRODUCT CUSTOMER DRAWING

DOCUMENT NUMBER	DOC TYPE	DOC PART	REVISION
530480001-SD	PSD	000	B

THIRD ANGLE PROJECTION	DRAWING	SERIES	MATERIAL NUMBER	CUSTOMER	SHEET NUMBER
	A2-SIZE	53048	SEE CHART	GENERAL	2 OF 2

DOCUMENT STATUS	P1	RELEASE DATE	2022/04/19 08:41:23

FORMAT: molex_landscape_mod-A2
REVISION: A
DATE: 2021/04/07