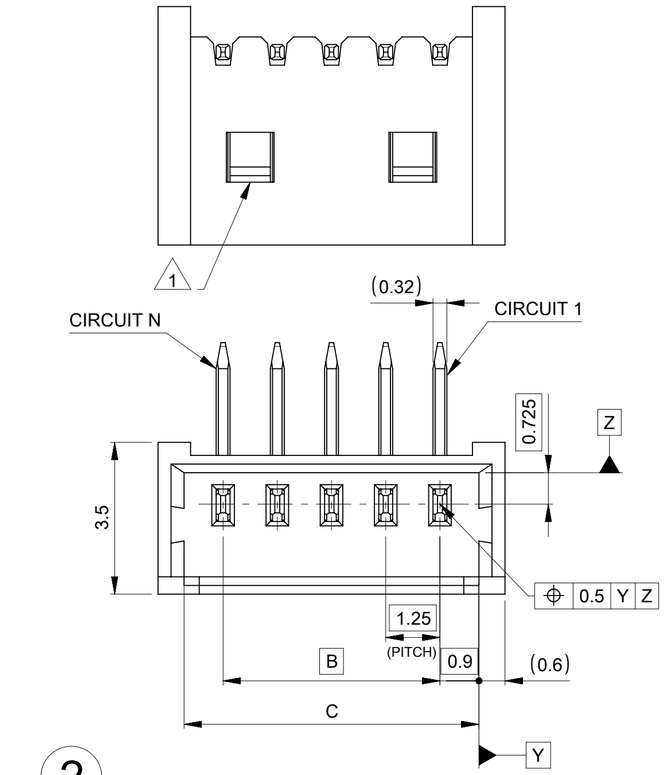

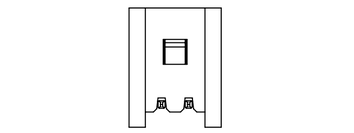

1 2, 3極形状 (1ロック)
FIGURE OF 2, 3 CIRCUIT (1 LOCK)

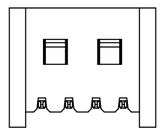

1 4~15極形状 (2ロック)
FIGURE OF 4-15 CIRCUIT (2 LOCKS)

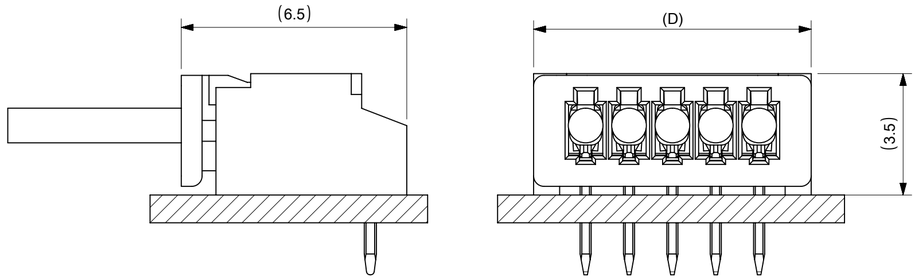

嵌合図
MATED CONNECTORES

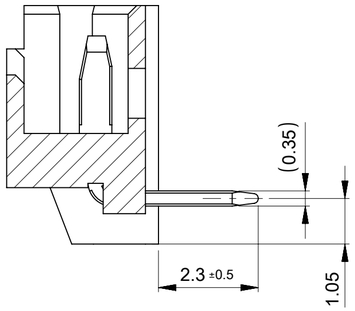

SECTION X-X

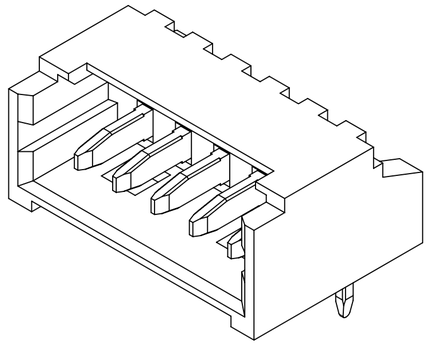

注記 NOTES

1. ロック窓 LOCKING WINDOW:
   ロック窓は、2、3極では1ヶ所、4極以上では2ヶ所とする。
   ONE PLACE FOR 2 AND 3 CIRCUIT.
   TWO PLACES FOR 4 CIRCUIT AND MORE.
2. 材料およびめっき仕様：TABLE1参照
   MATERIAL AND PLATING: REFER TO TABLE1
3. 適用製品及び各種仕様書はSHEET 2を参照のこと
   REFER TO SHEET 2 ABOUT APPLICABLE PRODUCTS
   AND VARIOUS SPECIFICATIONS
4. 本製品は金めっき品です。錫めっき品は530480001-SDをご参照ください。
   THIS PRODUCT IS GOLD PLATING TYPE.
   PLEASE REFER TO 530480001-SD FOR TIN PLATING TYPE.
5. 発注番号
   ORDER NO.

53048** * 0

番号	接点部 金めっき厚 CONTACT GOLD PLATING THICKNESS
6	FLASH
5	0.38 micro-meters MIN

極数
CIRCUIT

2 TABLE1

番号 NO.	部品 PART	材質 MATERIAL	
①	ハウジング HOUSING	ポリアミド(PA), UL94V-0, 色：ナチュラル (ホワイト) POLYAMIDE(PA), UL94V-0, COLOR：NATURAL (WHITE)	
②	ターミナル TERMINAL	母材 MATERIAL	りん青銅 PHOSPHOR BRONZE
		コンタクト部 CONTACT AREA	金めっき：めっき厚は注記5参照 GOLD PLATING PLATING THICKNESS : SEE NOTE 5.
		テール部 TAIL AREA	無光沢錫めっき 1.0 micro-meters MIN (リフロー処理) MATTE TIN PLATING 1.0 micro-meters MIN (REFLOW TREATMENT)
		下地めっき (コンタクト部、テール部) UNDER PLATING (CONTACT, TAIL AREA)	ニッケルめっき 0.5 micro-meters MIN NICKEL PLATING 0.5 micro-meters MIN

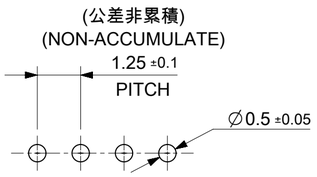

基板取付穴推奨寸法 (t=0.8)
RECOMMENDED P.W.B HOLE DIMENSION (t=0.8)

20.5	19.3	17.5	20.5	530481550	530481560	15
19.25	18.05	16.25	19.25	530481450	530481460	14
18	16.8	15	18	530481350	530481360	13
16.75	15.55	13.75	16.75	530481250	530481260	12
15.5	14.3	12.5	15.5	530481150	530481160	11
14.25	13.05	11.25	14.25	530481050	530481060	10
13	11.8	10	13	530480950	530480960	9
11.75	10.55	8.75	11.75	530480850	530480860	8
10.5	9.3	7.5	10.5	530480750	530480760	7
9.25	8.05	6.25	9.25	530480650	530480660	6
8	6.8	5	8	530480550	530480560	5
6.75	5.55	3.75	6.75	530480450	530480460	4
5.5	4.3	2.5	5.5	530480350	530480360	3
4.25	3.05	1.25	4.25	530480250	530480260	2
D	C	B	A	GOLD PLATING THICKNESS 0.38 micro-meters MIN	GOLD PLATING THICKNESS FLASH	極数 CRICUIT
				5 オーダー番号 ORDER NO.		
				梱包形態：トレイ梱包 PACKAGING: PLASTIC TRAY		

THIS DRAWING CONTAINS INFORMATION THAT IS PROPRIETARY TO MOLEX ELECTRONIC TECHNOLOGIES, LLC AND SHOULD NOT BE USED WITHOUT WRITTEN PERMISSION

DIMENSION UNITS	mm
SCALE	NTS
GENERAL TOLERANCES (UNLESS SPECIFIED)	
ANGULAR TOL	± 3.0 °
4 PLACES	± 0.2
3 PLACES	± 0.2
2 PLACES	± 0.2
1 PLACE	± 0.2
0 PLACES	± 0.2
DRAFT WHERE APPLICABLE MUST REMAIN WITHIN DIMENSIONS	

CURRENT REV DESC:

EC NO: 738324
DRWN: SSATO02 2023/01/12
CHK'D: KOMURAKAMI 2023/04/20
APPR: SAKIYAMA 2023/04/20

INITIAL REVISION:
DRWN: SOBARA01 2018/10/18
APPR: TKANEKO 2018/10/30

molex

PICOBLADE 1.25
HEADER ASSY TH RIGHT ANGLE GOLD PLATING TYPE

PRODUCT CUSTOMER DRAWING

DOCUMENT NUMBER	DOC TYPE	DOC PART	REVISION
530480000-SD	PSD	000	D

THIRD ANGLE PROJECTION	DRAWING	SERIES	MATERIAL NUMBER	CUSTOMER	SHEET NUMBER
	A2-SIZE	53048	SEE CHART	GENERAL	1 OF 2

DOCUMENT STATUS	P1	RELEASE DATE	2023/04/20 08:03:46

FORMAT: molex-prod-A2
REVISION: A
DATE: 2022/08/17

△3 適合製品および各種仕様書
APPLICABLE PRODUCTS AND SPECIFICATIONS

梱包仕様書 PACKING SPECIFICATION	PART NUMBER			SPECIFICATION NUMBER
	53048****			SPK-53048-001
適合嵌合相手 MATE WITH	HOUSING	CRIMP TREMINAL		
	51021****	WIRE SIZE (AWG)	GOLD PLATING THICKNESS	PART NUMBER
		#28-32	FLASH	500588020
			0.38 micro-meters	500588025
		#26-28	FLASH	500798020
			0.38 micro-meters	500798025
製品仕様書 PRODUCT SPECIFICATION	510210000-PS PS 000			
アプリケーション仕様書 (取扱説明書) APPLICATION SPECIFICATION	510210000-AS PS 000			

THIS DRAWING CONTAINS INFORMATION THAT IS PROPRIETARY TO MOLEX ELECTRONIC TECHNOLOGIES, LLC AND SHOULD NOT BE USED WITHOUT WRITTEN PERMISSION

DIMENSION UNITS	SCALE
mm	NTS

GENERAL TOLERANCES (UNLESS SPECIFIED)

ANGULAR TOL	±	3.0 °
4 PLACES	±	0.2
3 PLACES	±	0.2
2 PLACES	±	0.2
1 PLACE	±	0.2
0 PLACES	±	0.2

DRAFT WHERE APPLICABLE MUST REMAIN WITHIN DIMENSIONS

CURRENT REV DESC:

EC NO: 738324

DRWN:	SSATO02	2023/01/12
CHK'D:	KOMURAKAMI	2023/04/20
APPR:	SAKIYAMA	2023/04/20

INITIAL REVISION:

DRWN:	SOBARA01	2018/10/18
APPR:	TKANEKO	2018/10/30

THIRD ANGLE PROJECTION | DRAWING: A2-SIZE | SERIES: 53048

molex

PICOBLADE 1.25
HEADER ASSY TH RIGHT ANGLE GOLD PLATING TYPE

PRODUCT CUSTOMER DRAWING

DOCUMENT NUMBER	DOC TYPE	DOC PART	REVISION
530480000-SD	PSD	000	D

MATERIAL NUMBER	CUSTOMER	SHEET NUMBER
	GENERAL	2 OF 2

DOCUMENT STATUS	P1	RELEASE DATE	2023/04/20 08:03:46

FORMAT: Portrait-prod-A2
REVISION: 1.4
DATE: 2020/8/4