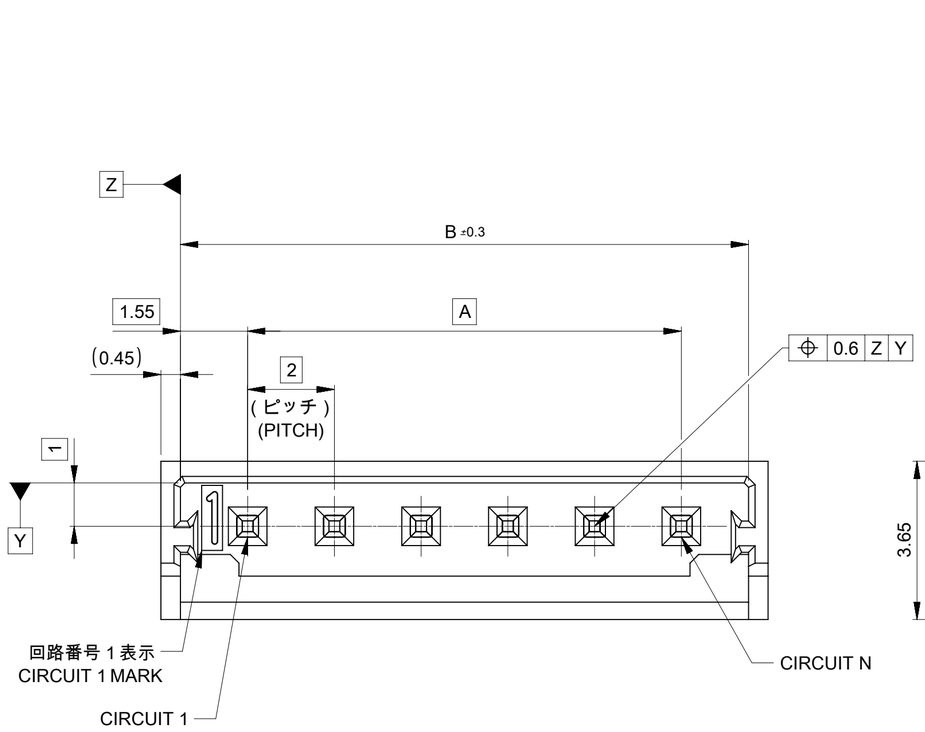

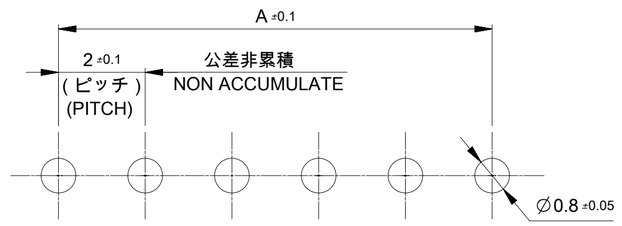

5 基板取付穴寸法 (参考) (t = 1.6)
RECOMMENDED P.C. BOARD HOLE DIMENSION (REFERENCE)

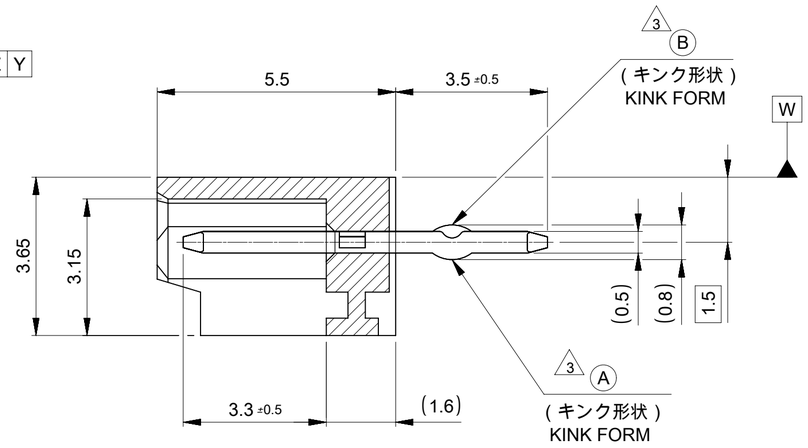

NOTES

1. 材料及び仕上げ (めっき仕様) : TABLE 1参照
   MATERIAL AND FINISHES: SEE TABLE 1
2. 適用製品及び各種仕様書はSHEET 2 をご参考ください。
   PLEASE REFER TO SHEET 2 FOR APPLICABLE PRODUCTS AND VARIOUS SPECIFICATIONS.
3. キンクは下記表の位置及び形状に付加のこと。 2 極はキンク無し。
   KINK TO BE APPLIED AS FOLLOWS, 2 CIRCUIT HAS NO KINK.

極数 CKT		回路番号 CIRCUIT NO							
		1	2	3	4	5	N-2	N-1	N
6極以上 MORE THAN 6 CKT		–	A	B	–	–	B	A	–
5極	5CKT	A	B	–	B	A			
4極	4CKT	A	B	B	A				
3極	3CKT	A	B	A					

4. 本製品は錫めっき品です。金めっきは5026030000-SD/PSD/000を御参照ください。
   THIS PRODUCT IS A TIN PLATING, PLEASE REFER TO 5026030000-SD/PSD/000 FOR GOLD PLATING.
5. PART-PCB間の実装には極性がありません :
   極数番号は記載していません。
   PART-TO-PCB MOUNTING IS NOT POLARIZED:
   NO CIRCUIT NUMBERING IS REQUIRED.

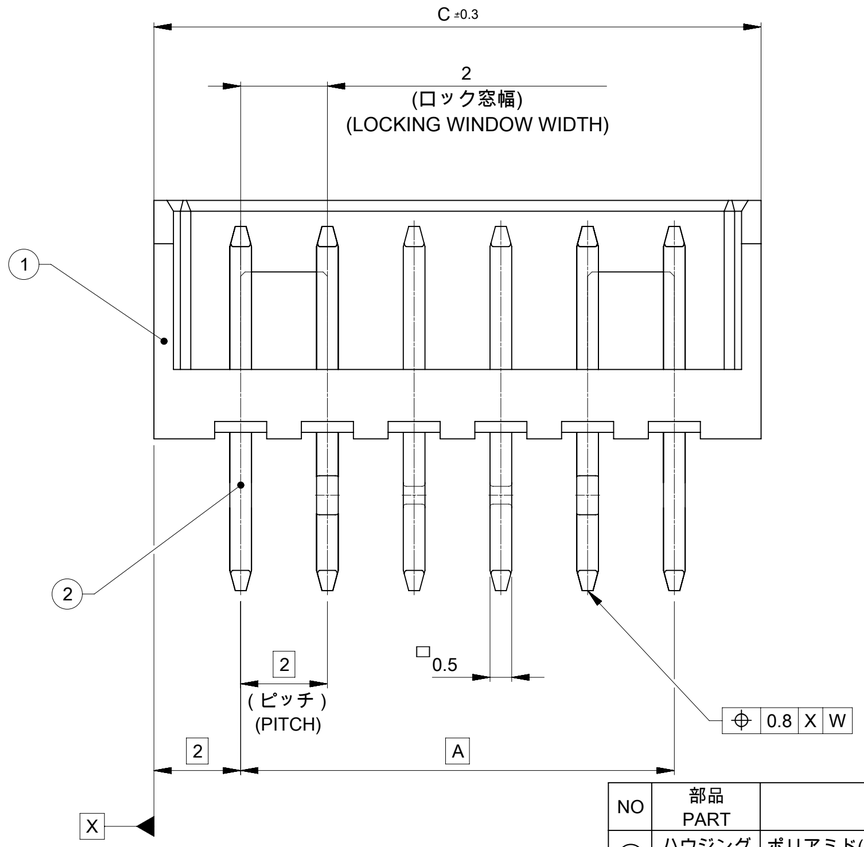

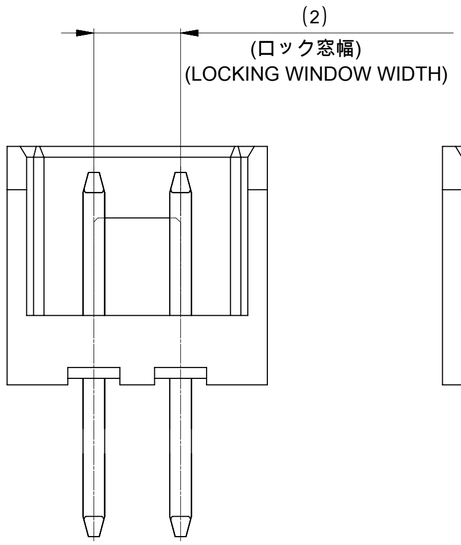

2極の場合
FOR 2 CKT

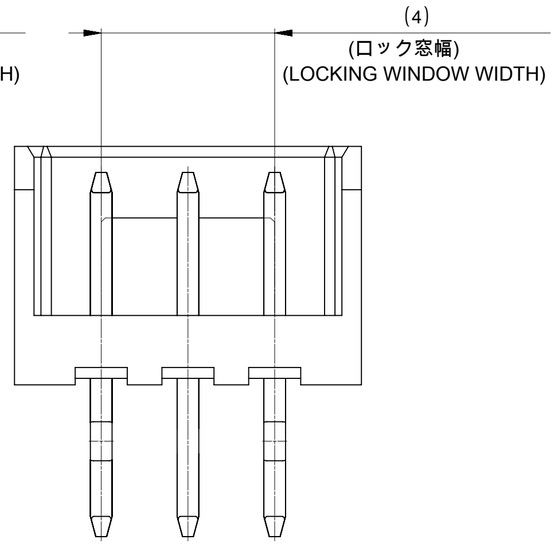

3極の場合
FOR 3 CKT

32	31.1	28	532531570	15
30	29.1	26	532531470	14
28	27.1	24	532531370	13
26	25.1	22	532531270	12
24	23.1	20	532531170	11
22	21.1	18	532531070	10
20	19.1	16	532530970	9
18	17.1	14	532530870	8
16	15.1	12	532530770	7
14	13.1	10	532530670	6
12	11.1	8	532530570	5
10	9.1	6	532530470	4
8	7.1	4	532530370	3
6	5.1	2	532530270	2
C	B	A	トレー TRAY	極数 CKT
			材料番号 MATERIAL NO	

1 TABLE 1

NO	部品 PART	材質 MATERIAL		
①	ハウジング HOUSING	ポリアミド(PA)、UL94V-0、 色: ナチュラル (ベージュ) POLYAMIDE(PA), UL94V-0, COLOR: NATURAL (BEIGE)		
②	ターミナル TERMINAL	黄銅 BRASS		
		下地めっき UNDER PLATING	ニッケルめっき : 0.5 micro-meters MIN NICKEL PLATING: 0.5 micro-meters MIN	
		めっき PLATING	錫めっき : 1.0 micro-meter MIN MATTE TIN: 1.0 micro-meter MIN	リフロー処理 (前めっき) REFLOW TREATMENT (PRE-PLATING)

DOCUMENT STATUS	P1	RELEASE DATE	2020/05/01 01:51:29

THIS DRAWING CONTAINS INFORMATION THAT IS PROPRIETARY TO MOLEX ELECTRONIC TECHNOLOGIES, LLC AND SHOULD NOT BE USED WITHOUT WRITTEN PERMISSION

DIMENSION UNITS	SCALE
mm	NTS

GENERAL TOLERANCES (UNLESS SPECIFIED)

ANGULAR TOL	± 3.0 °
4 PLACES	± 0.2
3 PLACES	± 0.2
2 PLACES	± 0.2
1 PLACE	± 0.2
0 PLACES	± 0.2

DRAFT WHERE APPLICABLE MUST REMAIN WITHIN DIMENSIONS

CURRENT REV DESC: REDRAWN AND REVISED

EC NO: 636761
DRWN: HHUSSIN 2019/09/24
CHK'D: SAKIYAMA 2020/04/30
APPR: KOMURAKAMI 2020/05/01

INITIAL REVISION:
DRWN: HHUSSIN 2019/09/24
APPR: KOMURAKAMI 2020/05/01

THIRD ANGLE PROJECTION | DRAWING: A2-SIZE | SERIES: 53253

molex

MICRO-LATCH 2.0 WTB
VERTICAL HEADER ASSY

PRODUCT CUSTOMER DRAWING

DOCUMENT NUMBER	DOC TYPE	DOC PART	REVISION
532530000-SD	PSD	000	A

MATERIAL NUMBER	CUSTOMER	SHEET NUMBER
	GENERAL	1 OF 2

FORMAT: master-tb-prod-A2
REVISION: J
DATE: 2020/01/14

△2 適用製品及び各種仕様書
APPLICABLE PRODUCTS AND VARIOUS SPECIFICATIONS

	PART NUMBER	SPECIFICATION NUMBER
梱包仕様書 PACKING SPECIFICATION	53253**70	SPK-53253-001

適用ハウジング APPLICABLE HOUSING	SINGLE TYPE
シリーズ番号　SERIES NO	51065
製品仕様書 PRODUCT SPECIFICATION	510650000-PS/PS/000

	PART NUMBER	PLATING TYPE	WIRE SIZE (AWG)
適用端子 APPLICABLE TERMINAL	502128*00	TIN	#24-30
	503728*00		#22-26

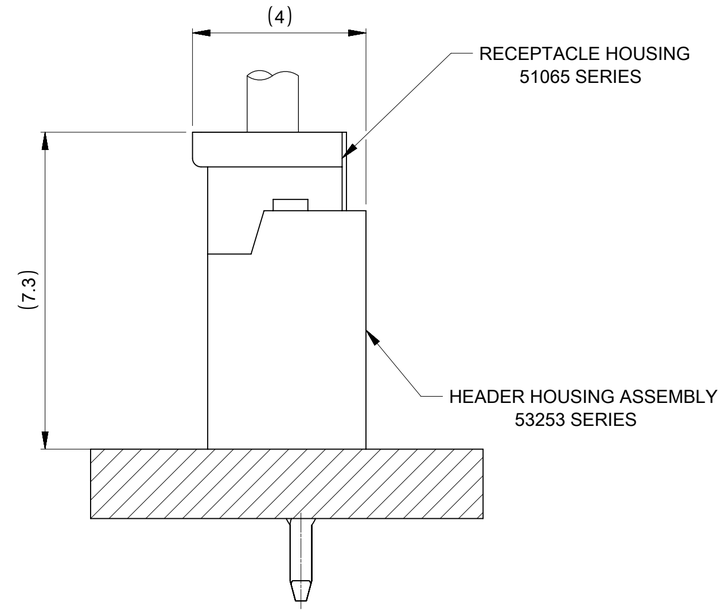

51065シリーズ/53253シリーズ　嵌合状態図　参考
51065 SERIES/ 53253 SERIES MATED DRAWING (REF)

THIS DRAWING CONTAINS INFORMATION THAT IS PROPRIETARY TO MOLEX ELECTRONIC TECHNOLOGIES, LLC AND SHOULD NOT BE USED WITHOUT WRITTEN PERMISSION

DIMENSION UNITS	SCALE
mm	NTS

GENERAL TOLERANCES (UNLESS SPECIFIED)

ANGULAR TOL	±	3.0 °
4 PLACES	±	0.2
3 PLACES	±	0.2
2 PLACES	±	0.2
1 PLACE	±	0.2
0 PLACES	±	0.2

DRAFT WHERE APPLICABLE MUST REMAIN WITHIN DIMENSIONS

CURRENT REV DESC: REDRAWN AND REVISED

EC NO: 636761
DRWN: HHUSSIN 2019/09/24
CHK'D: SAKIYAMA 2020/04/30
APPR: KOMURAKAMI 2020/05/01

INITIAL REVISION:
DRWN: HHUSSIN 2019/09/24
APPR: KOMURAKAMI 2020/05/01

THIRD ANGLE PROJECTION

DRAWING	SERIES
A2-SIZE	53253

molex

MICRO-LATCH 2.0 WTB
VERTICAL HEADER ASSY

PRODUCT CUSTOMER DRAWING

DOCUMENT NUMBER	DOC TYPE	DOC PART	REVISION
532530000-SD	PSD	000	A

MATERIAL NUMBER	CUSTOMER	SHEET NUMBER
	GENERAL	2 OF 2

DOCUMENT STATUS	P1	RELEASE DATE	2020/05/01 01:51:29

FORMAT: master-tb-prod-A2
REVISION: J
DATE: 2020/01/14