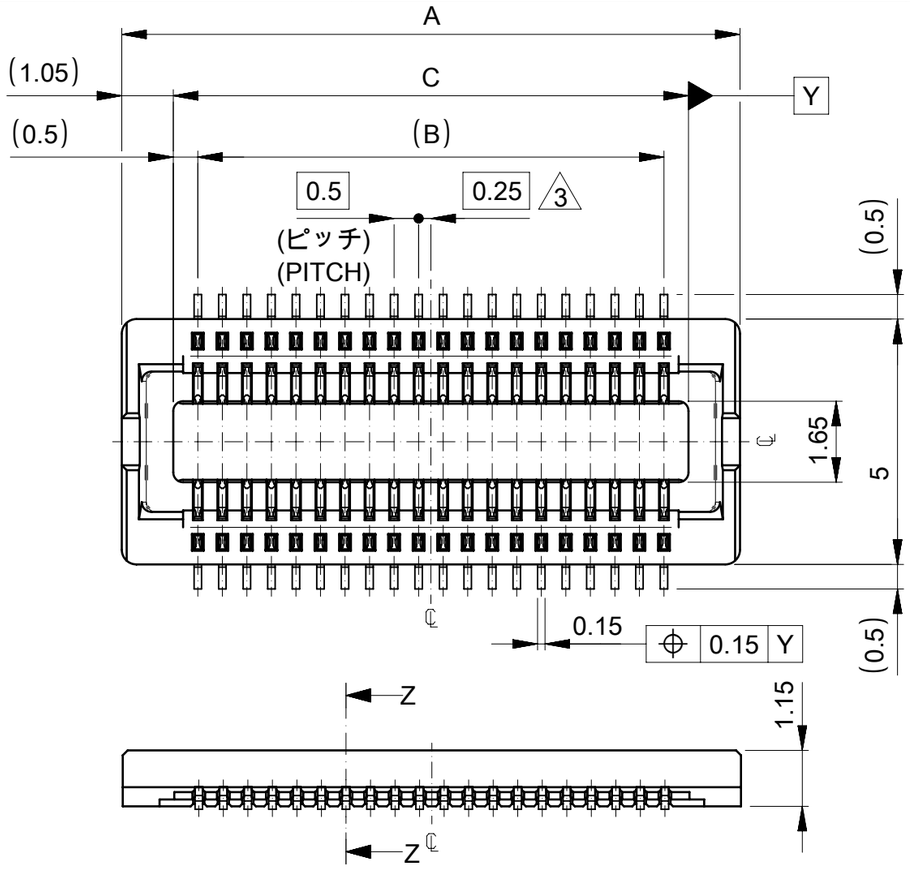

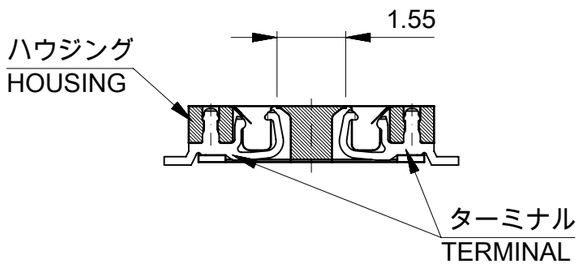

SECTION Z-Z

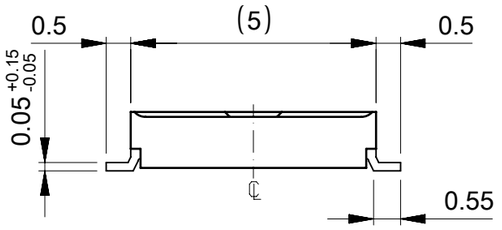

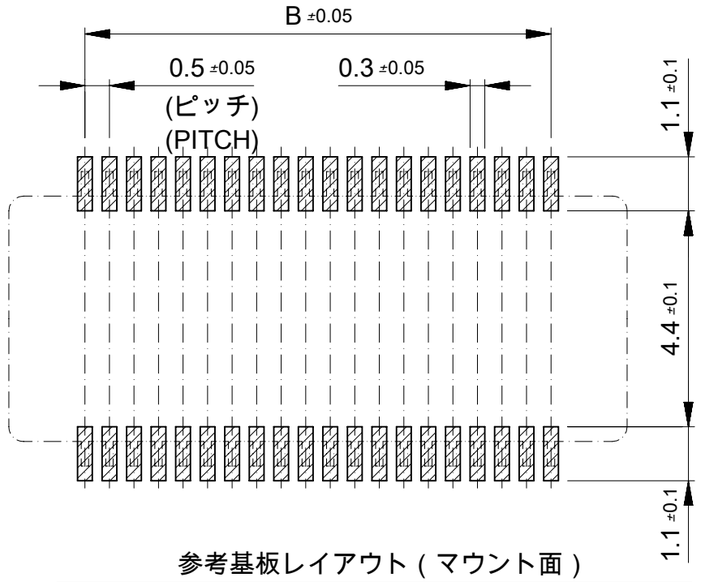

参考基板レイアウト（マウント面）

P.C.BOARD PATTERN DIMENSION (REFERENCE)
(MOUNTING AREA)

30 極以下品形状
SHAPE OF 30 CIRCUITS OR LESS

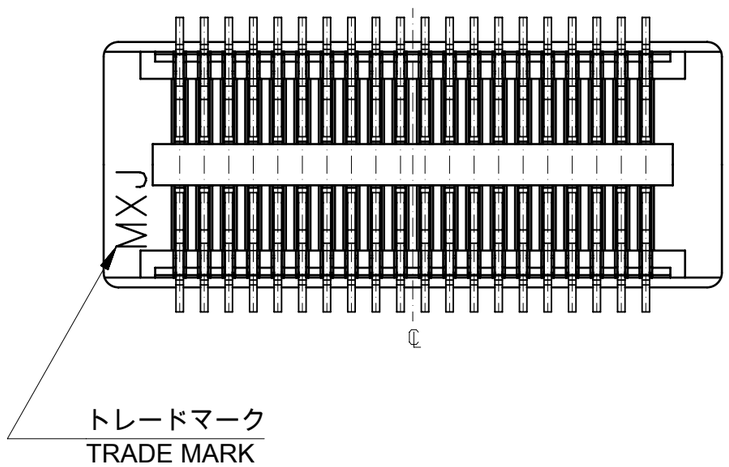

トレードマーク
TRADE MARK

注記 NOTES:

1. 使用材料 MATERIAL
   ハウジング：液晶ポリマーガラス充填, UL94V-0 (黒)
   HOUSING : LIQUID CRYSTRAL POLYMER (GLASS FILLED)
   UL94V-0 (COLOR:BLACK)
   ターミナル：リン青銅（t =0.15)
   TERMINAL : PHOSPHOR BRONZE (t=0.15)
2. メッキ仕様PLATING
   金メッキ 0.25 マイクロメートル以上（コンタクト部）
   GOLD 0.25 MICROMETER MINIMUM (CONTACT AREA).
   金メッキ 0.4 マイクロメートル以下（テール部）
   GOLD 0.4 MICROMETER MAXIMUM (TAIL AREA).
   下地メッキ: ニッケルメッキ 1.5 マイクロメートル以上
   UNDER PLATING : NICKEL 1.5 MICROMETER MINIMUM.
   *コンタクト部とテール部はニッケルメッキによって
   分断されている金メッキです.
   DIVIDE INTO PARTS THE GOLD PLATING OF THE CONTACT
   AND THE TAIL PART BY THE NICKEL PLATING.

△3.(全極数 / 2) = 偶数の場合に適用.
APPLY FOR (CIRCUIT/2)=EVEN.

4. 嵌合相手：55560シリーズ(嵌合高さ = 1.5mm)
   MATE WITH : 55560 SERIES.(HEIGHT=1.5mm)
5. テール平坦度は、0.1以下
   TAIL COPLANARITY TO BE 0.1 MAXIMUM.

8.0	7.0	10.1	54722-0304	30
6.5	5.5	8.6	54722-0244	24
6.0	5.0	8.1	54722-0224	22
5.5	4.5	7.6	54722-0204	20
4.5	3.5	6.6	54722-0164	16
C	B	A	Emboss tape Package ORDER No. オーダー番号	極数 CIRCUIT

CONNECTOR SERIES No. 54722-***3

THIS DRAWING CONTAINS INFORMATION THAT IS PROPRIETARY TO MOLEX ELECTRONIC TECHNOLOGIES, LLC AND SHOULD NOT BE USED WITHOUT WRITTEN PERMISSION

GENERAL TOLERANCES (UNLESS SPECIFIED)	
0.25 UNDER	±0.2
0.25 OVER 0.5 UNDER	±0.2
0.5 OVER 1.0 UNDER	±0.2
1.0 OVER 10 UNDER	±0.2
10 OVER 30 UNDER	±0.25
30 OVER	±0.3
ANGULAR±3°	

DRAFT WHERE APPLICABLE MUST REMAIN WITHIN DIMENSIONS

DIMENSION UNITS	SCALE
mm	8:1

GENERAL TOLERANCES (UNLESS SPECIFIED)	
ANGULAR TOL ±	°
4 PLACES	±
3 PLACES	±
2 PLACES	±
1 PLACE	±
0 PLACES	±

DRAFT WHERE APPLICABLE MUST REMAIN WITHIN DIMENSIONS

CURRENT REV DESC: REVISED

EC NO: 642297
DRWN: SCV 2020/07/29
CHK'D: HSHIMOYAMA 2020/11/30
APPR: SHOSHIKAWA 2020/11/30

INITIAL REVISION:
DRWN: T.ITO 2003/08/20
APPR: T.YAMAGUCHI 2003/08/20

THIRD ANGLE PROJECTION | DRAWING: A3-SIZE | SERIES: 54722

molex

0.5 MM PITCH B-TO-B CONN.
HEIGHT = 1.5 RECEPTACLE

PRODUCT CUSTOMER DRAWING

DOCUMENT NUMBER	DOC TYPE	DOC PART	REVISION
SD-54722-011	PSD	001	D

MATERIAL NUMBER	CUSTOMER	SHEET NUMBER
SEE TABLE	GENERAL	1 OF 3

DOCUMENT STATUS	P1	RELEASE DATE	2020/11/30 03:37:43

FORMAT: master-tb-prod-A3
REVISION: J
DATE: 2020/01/14

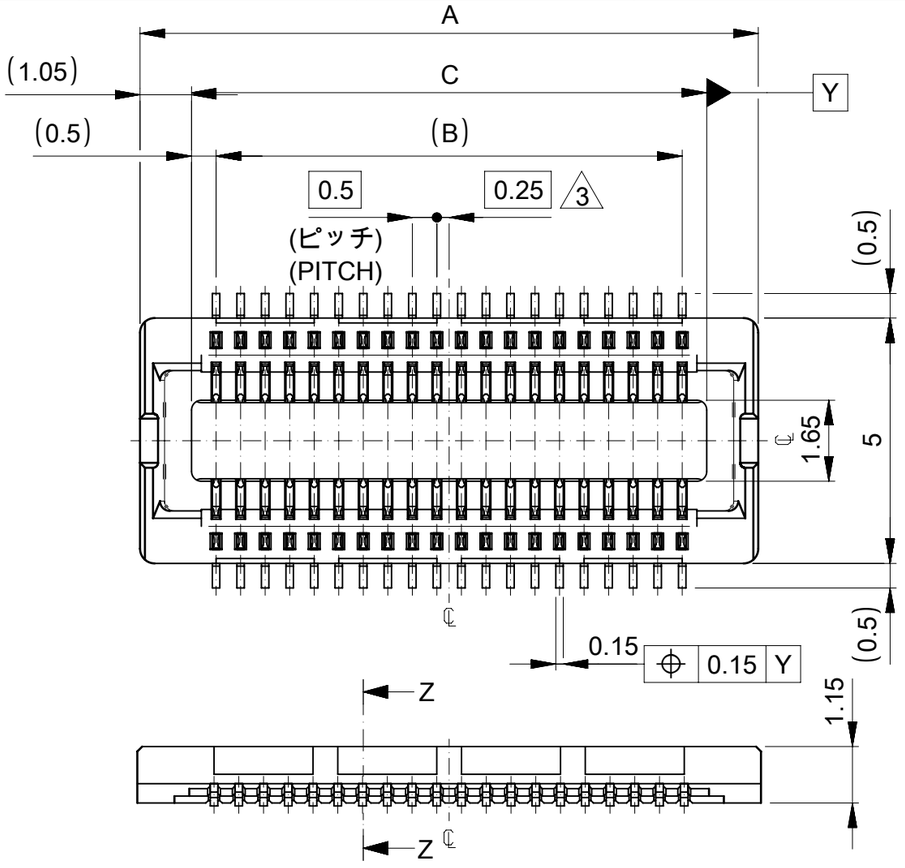

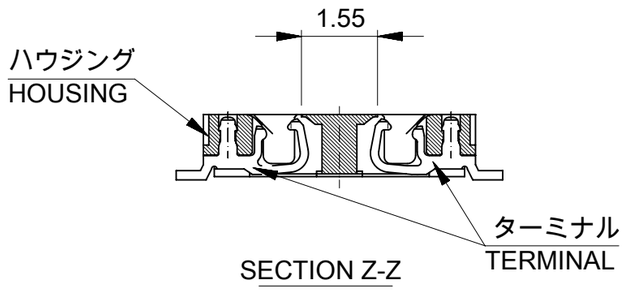

SECTION Z-Z

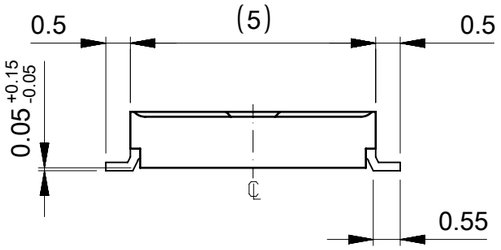

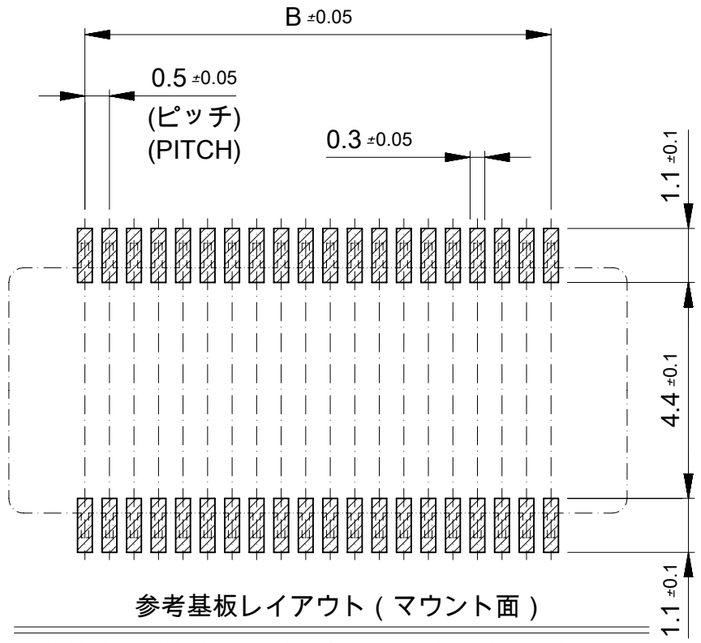

参考基板レイアウト (マウント面)

P.C.BOARD PATTERN DIMENSION (REFERENCE)
(MOUNTING AREA)

34 極以上品形状
SHAPE OF 34 CIRCUITS OR MORE

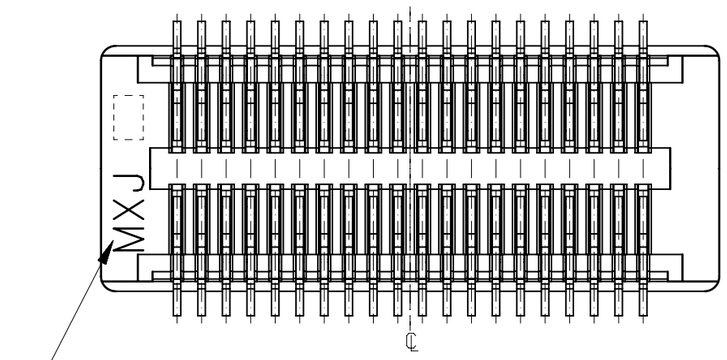

トレードマーク
TRADE MARK

注記 NOTES:

1. 使用材料 MATERIAL
   ハウジング：液晶ポリマーガラス充填, UL94V-0 (黒)
   HOUSING : LIQUID CRYSTRAL POLYMER (GLASS FILLED)
   UL94V-0 (COLOR:BLACK)
   ターミナル：リン青銅 (t =0.15)
   TERMINAL : PHOSPHOR BRONZE (t=0.15)
2. メッキ仕様PLATING
   金メッキ 0.25 マイクロメートル以上 (コンタクト部)
   GOLD 0.25 MICROMETER MINIMUM (CONTACT AREA).
   金メッキ 0.4 マイクロメートル以下 (テール部)
   GOLD 0.4 MICROMETER MAXIMUM (TAIL AREA).
   下地メッキ: ニッケルメッキ 1.5 マイクロメートル以上
   UNDER PLATING : NICKEL 1.5 MICROMETER MINIMUM.
   *コンタクト部とテール部はニッケルメッキによって
   分断されている金メッキです.
   DIVIDE INTO PARTS THE GOLD PLATING OF THE CONTACT
   AND THE TAIL PART BY THE NICKEL PLATING.

3. (全極数 / 2) = 偶数の場合に適用.
   APPLY FOR (CIRCUIT/2)=EVEN.
4. 嵌合相手：55560シリーズ(嵌合高さ = 1.5mm)
   MATE WITH : 55560 SERIES.(HEIGHT=1.5mm)
5. テール平坦度は、0.1以下
   TAIL COPLANARITY TO BE 0.1 MAXIMUM.

20.5	19.5	22.6	54722-0804	80
15.5	14.5	17.6	54722-0604	60
13.0	12.0	15.1	54722-0504	50
10.5	9.5	12.6	54722-0404	40
9.5	8.5	11.6	54722-0364	36
9.0	8.0	11.1	54722-0344	34
C	B	A	Emboss tape Package ORDER No. オーダー番号	極数 CIRCUIT

CONNECTOR SERIES No. 54722-***3

THIS DRAWING CONTAINS INFORMATION THAT IS PROPRIETARY TO MOLEX ELECTRONIC TECHNOLOGIES, LLC AND SHOULD NOT BE USED WITHOUT WRITTEN PERMISSION

GENERAL TOLERANCES (UNLESS SPECIFIED)	
0.25 UNDER	±0.2
0.25 OVER 0.5 UNDER	±0.2
0.5 OVER 1.0 UNDER	±0.2
1.0 OVER 10 UNDER	±0.2
10 OVER 30 UNDER	±0.25
30 OVER	±0.3
ANGULAR±3°	
DRAFT WHERE APPLICABLE MUST REMAIN WITHIN DIMENSIONS	

DIMENSION UNITS	SCALE
mm	8:1

GENERAL TOLERANCES (UNLESS SPECIFIED)	
ANGULAR TOL ±	°
4 PLACES	±
3 PLACES	±
2 PLACES	±
1 PLACE	±
0 PLACES	±
DRAFT WHERE APPLICABLE MUST REMAIN WITHIN DIMENSIONS	

CURRENT REV DESC: REVISED

EC NO: 642297
DRWN: SCV 2020/07/29
CHK'D: HSHIMOYAMA 2020/11/30
APPR: SHOSHIKAWA 2020/11/30

INITIAL REVISION:
DRWN: T.ITO 2003/08/20
APPR: T.YAMAGUCHI 2003/08/20

molex

0.5 MM PITCH B-TO-B CONN.
HEIGHT = 1.5 RECEPTACLE

PRODUCT CUSTOMER DRAWING

DOCUMENT NUMBER	DOC TYPE	DOC PART	REVISION
SD-54722-011	PSD	001	D

THIRD ANGLE PROJECTION	DRAWING	SERIES	MATERIAL NUMBER	CUSTOMER	SHEET NUMBER
	A3-SIZE	54722	SEE TABLE	GENERAL	2 OF 3

DOCUMENT STATUS	P1	RELEASE DATE	2020/11/30 03:37:43

FORMAT: master-tb-prod-A3
REVISION: J
DATE: 2020/01/14

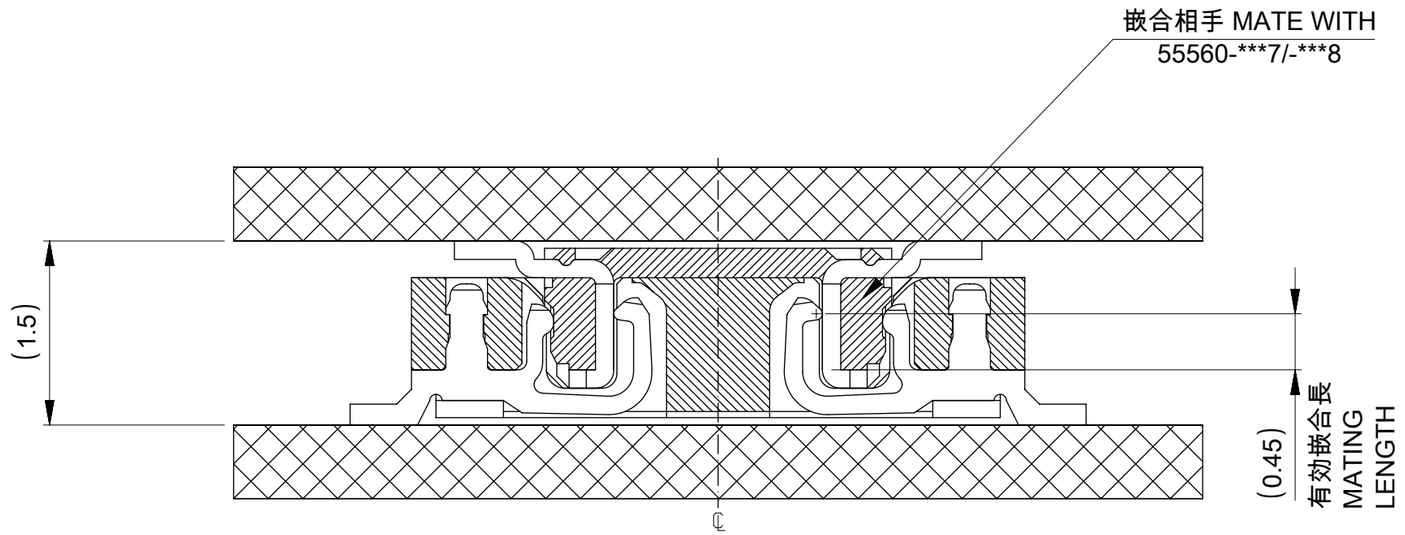

嵌合断面図（参考）

MATED DRAWING (REF.)

THIS DRAWING CONTAINS INFORMATION THAT IS PROPRIETARY TO MOLEX ELECTRONIC TECHNOLOGIES, LLC AND SHOULD NOT BE USED WITHOUT WRITTEN PERMISSION

GENERAL TOLERANCES (UNLESS SPECIFIED)	
0.25 UNDER	±0.2
0.25 OVER 0.5 UNDER	±0.2
0.5 OVER 1.0 UNDER	±0.2
1.0 OVER 10 UNDER	±0.2
10 OVER 30 UNDER	±0.25
30 OVER	±0.3
ANGULAR±3°	

DRAFT WHERE APPLICABLE MUST REMAIN WITHIN DIMENSIONS

DIMENSION UNITS	SCALE
mm	20:1

GENERAL TOLERANCES (UNLESS SPECIFIED)	
ANGULAR TOL ±	°
4 PLACES	±
3 PLACES	±
2 PLACES	±
1 PLACE	±
0 PLACES	±

DRAFT WHERE APPLICABLE MUST REMAIN WITHIN DIMENSIONS

CURRENT REV DESC: REVISED

EC NO: 642297
DRWN: SCV 2020/07/29
CHK'D: HSHIMOYAMA 2020/11/30
APPR: SHOSHIKAWA 2020/11/30

INITIAL REVISION:
DRWN: T.ITO 2003/08/20
APPR: T.YAMAGUCHI 2003/08/20

molex

0.5 MM PITCH B-TO-B CONN.
HEIGHT = 1.5 RECEPTACLE

PRODUCT CUSTOMER DRAWING

DOCUMENT NUMBER	DOC TYPE	DOC PART	REVISION
SD-54722-011	PSD	001	D

THIRD ANGLE PROJECTION	DRAWING	SERIES	MATERIAL NUMBER	CUSTOMER	SHEET NUMBER
	A3-SIZE	54722	SEE TABLE	GENERAL	3 OF 3

DOCUMENT STATUS	P1	RELEASE DATE	2020/11/30 03:37:43

FORMAT: master-lb-prod-A3
REVISION: J
DATE: 2020/01/14

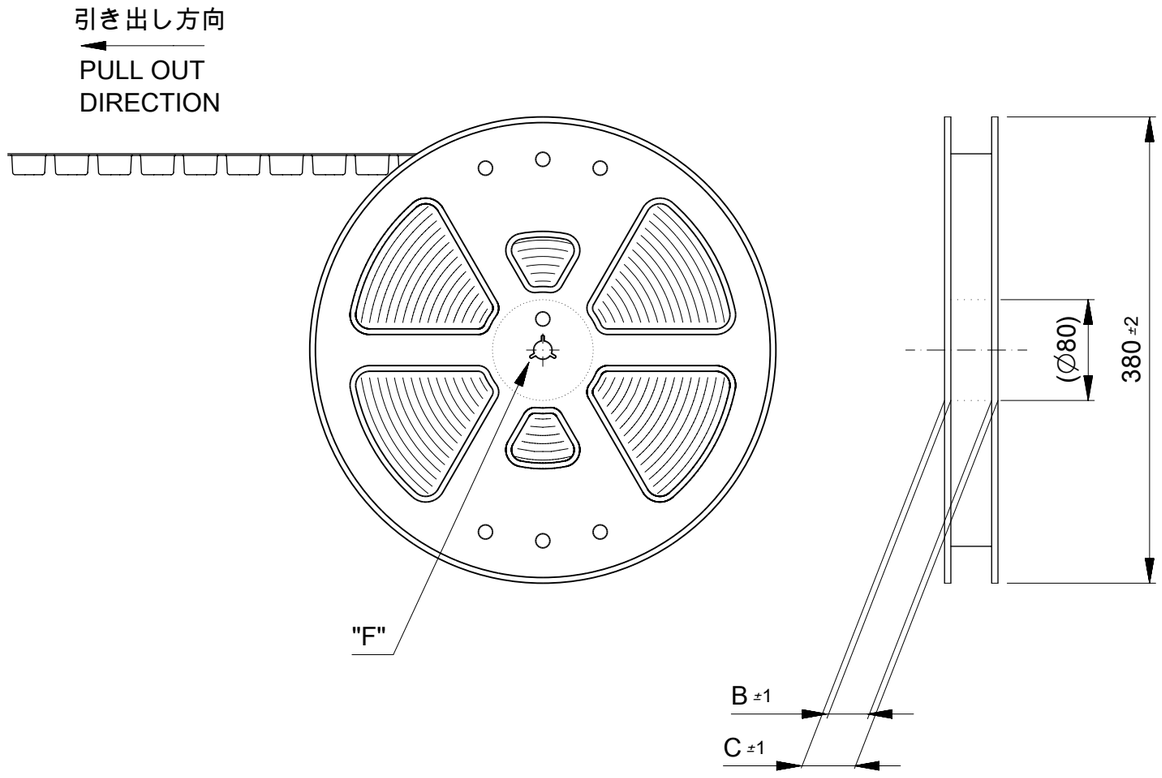

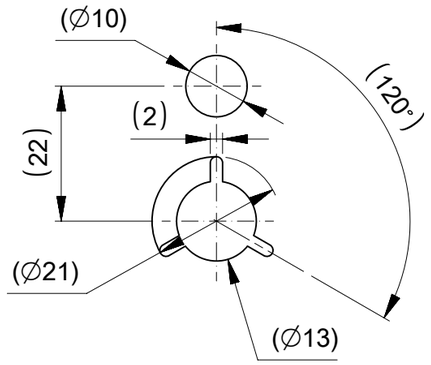

DETAIL "F"

注記 NOTE

1. 製品詳細寸法については図面 SD-54722-011 を参照下さい.
   DETAIL DIMENSIONS, SEE SD-54722-011
2. 梱包数量 : 3000個 / リール
   NUMBER OF CONNECTORS : 3000PCS/REEL
3. リードテープ長さ LEAD TAPE LENGTH

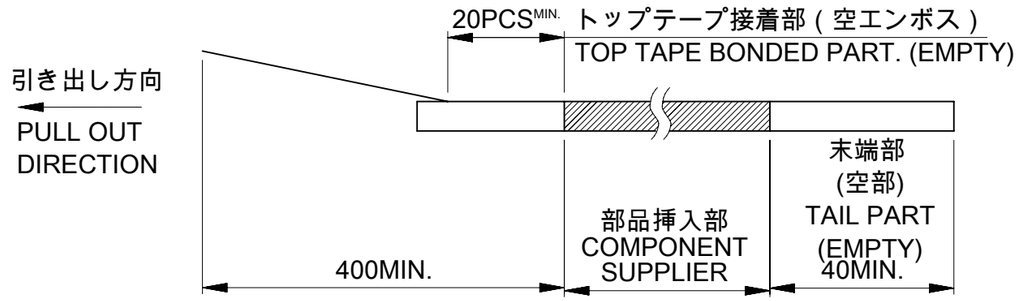

4. カバーテープの剥離強度については、IEC60286-3に準拠
   COVER TAPE PEEL FORCE IS DEFINED BY IEC60286-3.
5. FOR 16ckt ~ 40ckt
   材料 (MATERIAL)
   キャリアテープ (CARRIER TAPE) : ポリスチレン, POLYSTYRENE (PS)
   トップテープ (TOP TAPE) : PET
   リール (REEL) : ポリスチレン (PS) < リサイクル材を含む >
   POLYSTYRENE(PS) < RECYCLE MATERIAL CONTAINED >
   FOR 50ckt, 60ckt ,80ckt
   材料 (MATERIAL)
   キャリアテープ (CARRIER TAPE) : ポリプロピレン (POLYPROPYLENE)
   トップテープ (TOP TAPE) : PET,PE,PEF
   リール (REEL) : ポリスチレン (PS) < リサイクル材を含む >
   POLYSTYRENE(PS) < RECYCLE MATERIAL CONTAINED >

THIS DRAWING CONTAINS INFORMATION THAT IS PROPRIETARY TO MOLEX ELECTRONIC TECHNOLOGIES, LLC AND SHOULD NOT BE USED WITHOUT WRITTEN PERMISSION

GENERAL TOLERANCES (UNLESS SPECIFIED)	
10 UNDER	±0.2
10 OVER 30 UNDER	±0.25
30 OVER	±0.3
ANGULAR	±3°
DRAFT WHERE APPLICABLE MUST REMAIN WITHIN DIMENSIONS	

DIMENSION UNITS	SCALE
mm	NTS

GENERAL TOLERANCES (UNLESS SPECIFIED)	
ANGULAR TOL	± °
4 PLACES	±
3 PLACES	±
2 PLACES	±
1 PLACE	±
0 PLACES	±
DRAFT WHERE APPLICABLE MUST REMAIN WITHIN DIMENSIONS	

CURRENT REV DESC:

EC NO: 851965
DRWN: DGONDO 2026/01/27
CHK'D: SMARUYAMA 2026/03/31
APPR: YNAITO 2026/03/31

INITIAL REVISION:
DRWN: T.ITO 2003/08/20
APPR: Y.YAMAGUCHI 2003/08/20

THIRD ANGLE PROJECTION | DRAWING: A3-SIZE | SERIES: 54722

molex

0.5 MM PITCH B-TO-B CONN.
HEIGHT = 1.5 RECEPTACLE EMBOSS TAPE PACKAGE

PRODUCT CUSTOMER DRAWING

DOCUMENT NUMBER	DOC TYPE	DOC PART	REVISION
SD-54722-012	PSD	001	E

MATERIAL NUMBER	CUSTOMER	SHEET NUMBER
SEE SHEET 2-5	GENERAL	1 OF 5

DOCUMENT STATUS	P1	RELEASE DATE	2026/03/31 06:02:36

FORMAT: master-lb-prod-A3
REVISION: J
DATE: 2020/01/14

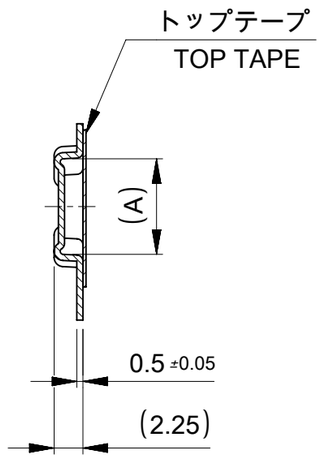

SECTION Y-Y

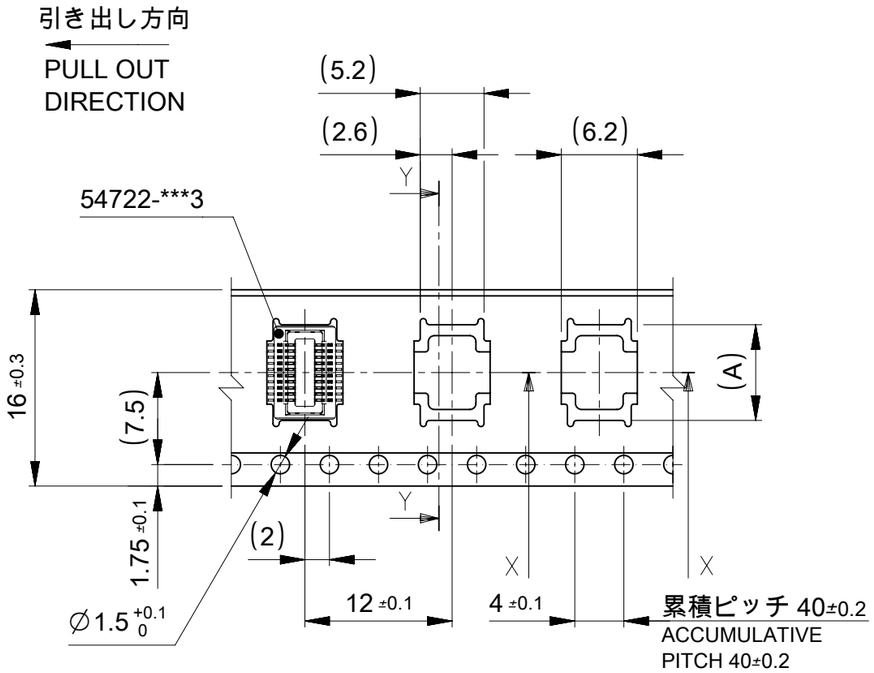

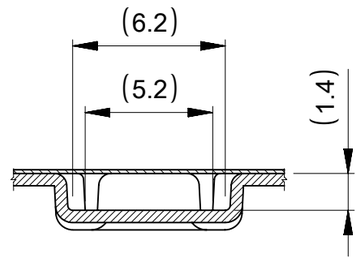

SECTION X-X

16 mm幅キャリアテープ

16mm WIDTH CARRIER TAPE

16	21.4	17.4	6.8	54722-0204	20
				54722-0164	16
キャリアテープ幅 CARRIER TAPE WIDTH	C	B	(A)	MATERIAL NO.	極数 CIRCUIT

THIS DRAWING CONTAINS INFORMATION THAT IS PROPRIETARY TO MOLEX ELECTRONIC TECHNOLOGIES, LLC AND SHOULD NOT BE USED WITHOUT WRITTEN PERMISSION

GENERAL TOLERANCES (UNLESS SPECIFIED)	
10^{UNDER}	±0.2
$10^{OVER}30^{UNDER}$	±0.25
30^{OVER}	±0.3
ANGULAR	±3°

DRAFT WHERE APPLICABLE MUST REMAIN WITHIN DIMENSIONS

DIMENSION UNITS	SCALE
mm	NTS

GENERAL TOLERANCES (UNLESS SPECIFIED)

ANGULAR TOL	± °
4 PLACES	±
3 PLACES	±
2 PLACES	±
1 PLACE	±
0 PLACES	±

DRAFT WHERE APPLICABLE MUST REMAIN WITHIN DIMENSIONS

CURRENT REV DESC:

EC NO: 851965

DRWN:	DGONDO	2026/01/27
CHK'D:	SMARUYAMA	2026/03/31
APPR:	YNAITO	2026/03/31

INITIAL REVISION:

DRWN:	T.ITO	2003/08/20
APPR:	Y.YAMAGUCHI	2003/08/20

molex

0.5 MM PITCH B-TO-B CONN.
HEIGHT = 1.5 RECEPTACLE EMBOSS TAPE PACKAGE

PRODUCT CUSTOMER DRAWING

DOCUMENT NUMBER	DOC TYPE	DOC PART	REVISION
SD-54722-012	PSD	001	E

THIRD ANGLE PROJECTION	DRAWING	SERIES	MATERIAL NUMBER	CUSTOMER	SHEET NUMBER
	A3-SIZE	54722	SEE TABLE	GENERAL	2 OF 5

DOCUMENT STATUS	P1	RELEASE DATE	2026/03/31 06:02:36

FORMAT: master-tb-prod-A3
REVISION: J
DATE: 2020/01/14

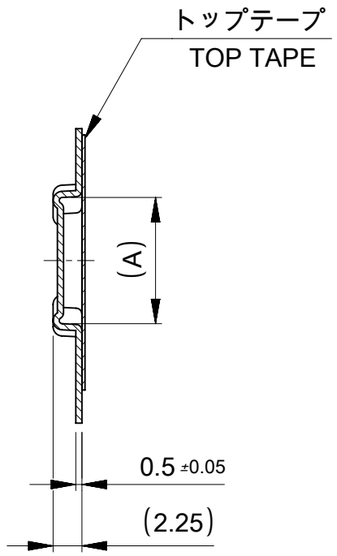

SECTION Y-Y

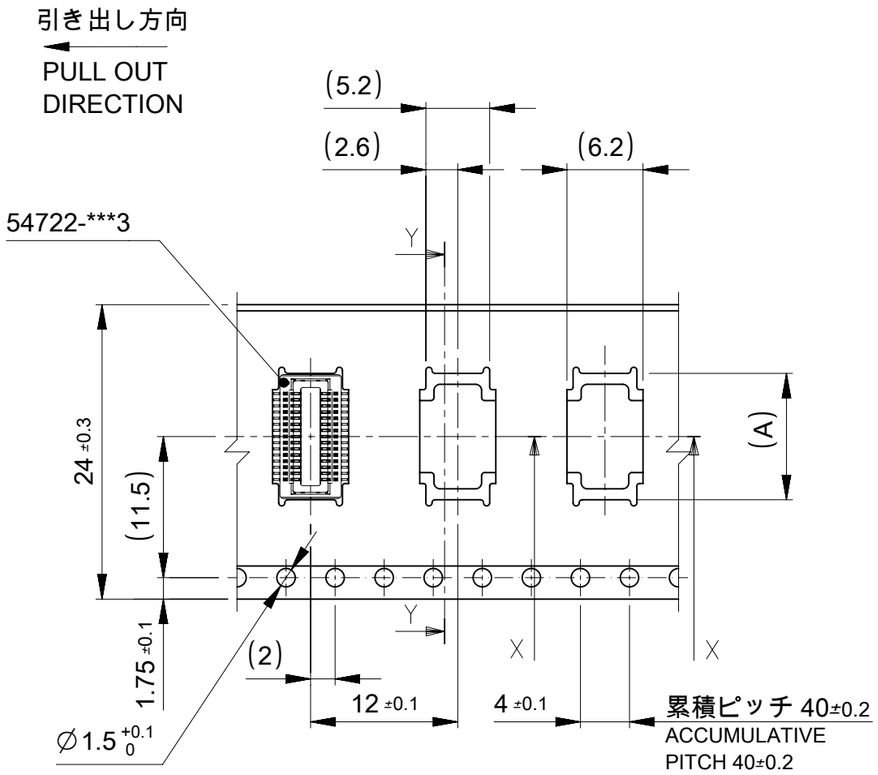

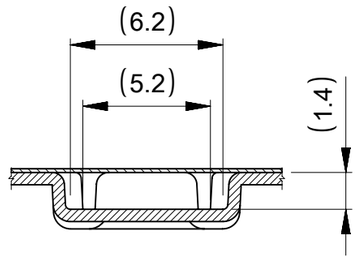

SECTION X-X

24 mm幅キャリアテープ

24mm WIDTH CARRIER TAPE

キャリアテープ幅 CARRIER TAPE WIDTH	C	B	(A)	MATERIAL NO.	極数 CIRCUIT
24	29.4	25.4	15.3	54722-0504	50
			12.8	54722-0404	40
			11.8	54722-0364	36
			11.3	54722-0344	34
			10.3	54722-0304	30
			8.8	54722-0244	24
			8.3	54722-0224	22

THIS DRAWING CONTAINS INFORMATION THAT IS PROPRIETARY TO MOLEX ELECTRONIC TECHNOLOGIES, LLC AND SHOULD NOT BE USED WITHOUT WRITTEN PERMISSION

GENERAL TOLERANCES (UNLESS SPECIFIED)	
10 UNDER	±0.2
10 OVER 30 UNDER	±0.25
30 OVER	±0.3
ANGULAR±3°	

DRAFT WHERE APPLICABLE MUST REMAIN WITHIN DIMENSIONS

GENERAL TOLERANCES (UNLESS SPECIFIED)	
ANGULAR TOL	± °
4 PLACES	±
3 PLACES	±
2 PLACES	±
1 PLACE	±
0 PLACES	±

DRAFT WHERE APPLICABLE MUST REMAIN WITHIN DIMENSIONS

DIMENSION UNITS	SCALE
mm	NTS

CURRENT REV DESC:

EC NO: 851965
DRWN: DGONDO 2026/01/27
CHK'D: SMARUYAMA 2026/03/31
APPR: YNAITO 2026/03/31

INITIAL REVISION:
DRWN: T.ITO 2003/08/20
APPR: Y.YAMAGUCHI 2003/08/20

THIRD ANGLE PROJECTION | DRAWING: A3-SIZE | SERIES: 54722

molex

0.5 MM PITCH B-TO-B CONN.
HEIGHT = 1.5 RECEPTACLE EMBOSS TAPE PACKAGE

PRODUCT CUSTOMER DRAWING

DOCUMENT NUMBER	DOC TYPE	DOC PART	REVISION
SD-54722-012	PSD	001	E

MATERIAL NUMBER	CUSTOMER	SHEET NUMBER
SEE TABLE	GENERAL	3 OF 5

DOCUMENT STATUS	P1	RELEASE DATE	2026/03/31 06:02:36

FORMAT: master-tb-prod-A3
REVISION: J
DATE: 2020/01/14

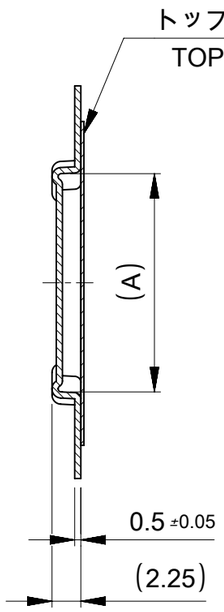

SECTION Y-Y

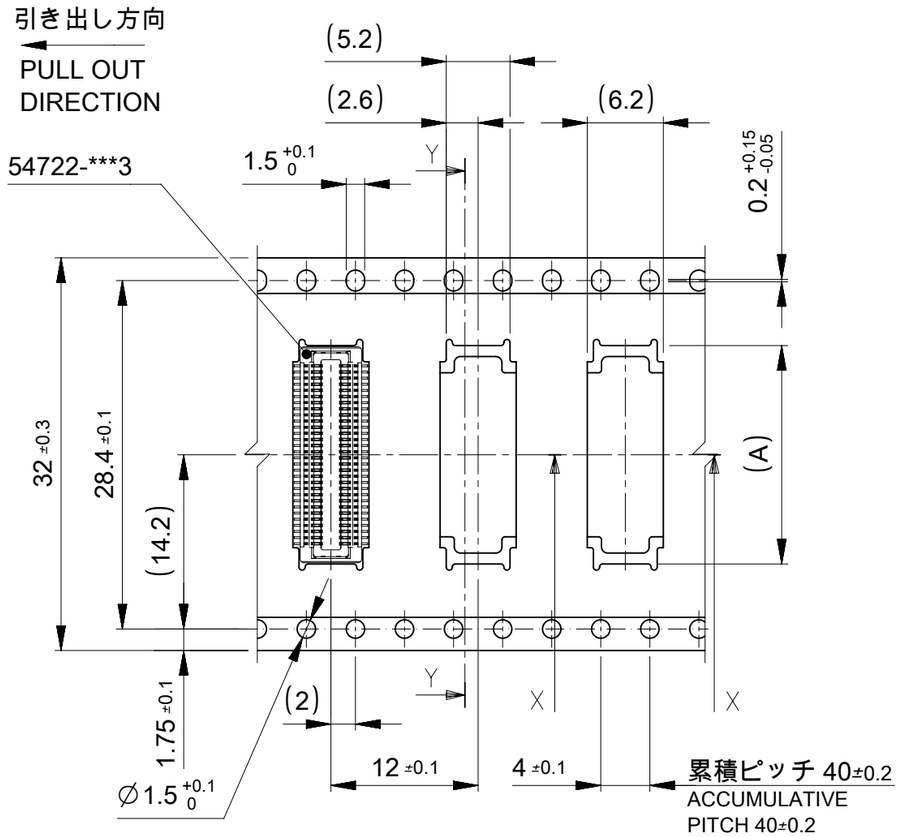

32 mm幅キャリアテープ

32mm WIDTH CARRIER TAPE

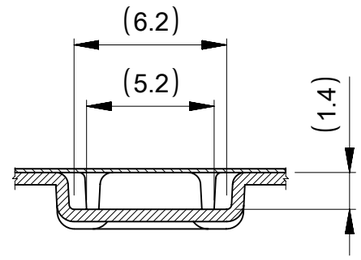

SECTION X-X

32	37.4	33.4	17.8	54722-0604	60
キャリアテープ幅 CARRIER TAPE WIDTH	C	B	(A)	MATERIAL NO.	極数 CIRCUIT

THIS DRAWING CONTAINS INFORMATION THAT IS PROPRIETARY TO MOLEX ELECTRONIC TECHNOLOGIES, LLC AND SHOULD NOT BE USED WITHOUT WRITTEN PERMISSION

GENERAL TOLERANCES (UNLESS SPECIFIED)	
10^{UNDER}	±0.2
$10^{OVER}30^{UNDER}$	±0.25
30^{OVER}	±0.3
ANGULAR	±3°

DRAFT WHERE APPLICABLE MUST REMAIN WITHIN DIMENSIONS

GENERAL TOLERANCES (UNLESS SPECIFIED)	
ANGULAR TOL	± °
4 PLACES	±
3 PLACES	±
2 PLACES	±
1 PLACE	±
0 PLACES	±

DRAFT WHERE APPLICABLE MUST REMAIN WITHIN DIMENSIONS

DIMENSION UNITS: mm
SCALE: NTS
THIRD ANGLE PROJECTION
DRAWING: A3-SIZE
SERIES: 54722

CURRENT REV DESC:

EC NO: 851965
DRWN: DGONDO 2026/01/27
CHK'D: SMARUYAMA 2026/03/31
APPR: YNAITO 2026/03/31

INITIAL REVISION:
DRWN: T.ITO 2003/08/20
APPR: Y.YAMAGUCHI 2003/08/20

molex

0.5 MM PITCH B-TO-B CONN.
HEIGHT = 1.5 RECEPTACLE EMBOSS TAPE PACKAGE

PRODUCT CUSTOMER DRAWING

DOCUMENT NUMBER	DOC TYPE	DOC PART	REVISION
SD-54722-012	PSD	001	E

MATERIAL NUMBER	CUSTOMER	SHEET NUMBER
SEE TABLE	GENERAL	4 OF 5

DOCUMENT STATUS	P1	RELEASE DATE	2026/03/31 06:02:36

FORMAT: master-lb-prod-A3
REVISION: J
DATE: 2020/01/14

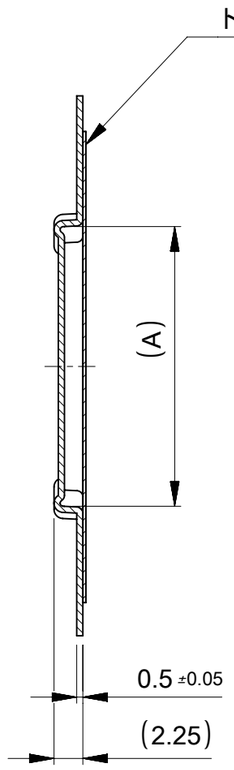

SECTION Y-Y

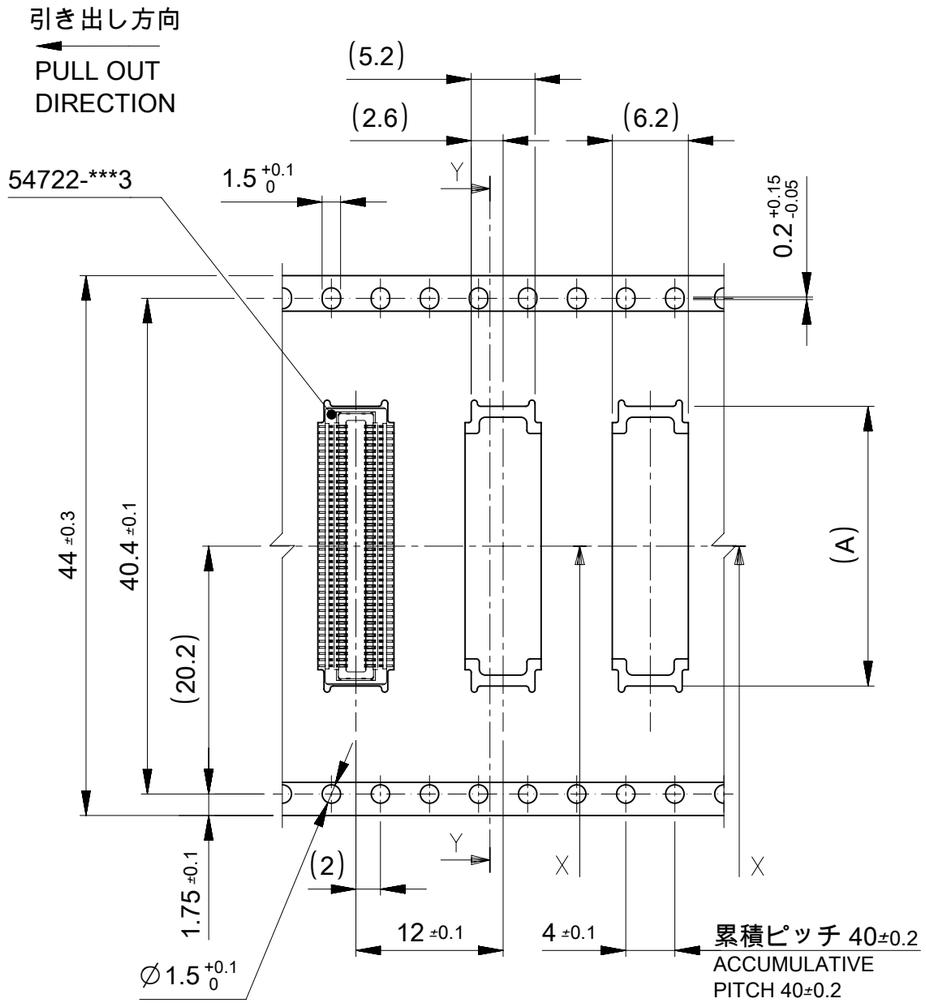

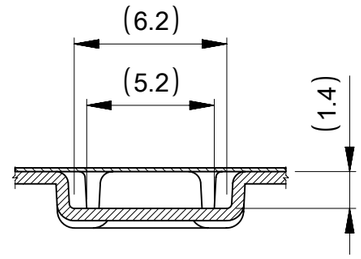

SECTION X-X

44 mm幅キャリアテープ

44mm WIDTH CARRIER TAPE

44	49.4	45.4	22.8	54722-0804	80
キャリアテープ幅 CARRIER TAPE WIDTH	C	B	(A)	MATERIAL NO.	極数 CIRCUIT

THIS DRAWING CONTAINS INFORMATION THAT IS PROPRIETARY TO MOLEX ELECTRONIC TECHNOLOGIES, LLC AND SHOULD NOT BE USED WITHOUT WRITTEN PERMISSION

DIMENSION UNITS	SCALE
mm	NTS

GENERAL TOLERANCES (UNLESS SPECIFIED)	
10 UNDER	±0.2
10 OVER 30 UNDER	±0.25
30 OVER	±0.3
ANGULAR	±3°

DRAFT WHERE APPLICABLE MUST REMAIN WITHIN DIMENSIONS

GENERAL TOLERANCES (UNLESS SPECIFIED)	
ANGULAR TOL	± °
4 PLACES	±
3 PLACES	±
2 PLACES	±
1 PLACE	±
0 PLACES	±

DRAFT WHERE APPLICABLE MUST REMAIN WITHIN DIMENSIONS

CURRENT REV DESC:

EC NO: 851965
DRWN: DGONDO 2026/01/27
CHK'D: SMARUYAMA 2026/03/31
APPR: YNAITO 2026/03/31

INITIAL REVISION:
DRWN: T.ITO 2003/08/20
APPR: Y.YAMAGUCHI 2003/08/20

molex

0.5 MM PITCH B-TO-B CONN.
HEIGHT = 1.5 RECEPTACLE EMBOSS TAPE
PACKAGE

PRODUCT CUSTOMER DRAWING

DOCUMENT NUMBER	DOC TYPE	DOC PART	REVISION
SD-54722-012	PSD	001	E

THIRD ANGLE PROJECTION	DRAWING	SERIES
	A3-SIZE	54722

MATERIAL NUMBER	CUSTOMER	SHEET NUMBER
SEE TABLE	GENERAL	5 OF 5

DOCUMENT STATUS	P1	RELEASE DATE	2026/03/31 06:02:36

FORMAT: master-lb-prod-A3
REVISION: J
DATE: 2020/01/14