Single-Turn Precision Potentiometer

Model 5610 Series

Features:
- 2” diameter
- Wirewound

RoHS 2 compliant



Models

5611	1/4" Shaft, 3/8" Bushing
5613	1/4" Shaft, Servo

Electrical

Resistance Range, Ohms	15 to 80K
Standard Resistance Tolerance	±5%
Minimum Practical Resistance Tolerance	±1.0%
Independent Linearity	±1.0%, <50 Ohms ±0.5%, ≥50 Ohms
Minimum Practical Independent Linearity	±1.0%, <50 Ohms ±0.5%, 50-499 Ohms ±0.25%, 500-4,999 Ohms ±0.1%, ≥5K Ohms
Power Rating, Watts	3.5 at 70°C derating to 0 at 125°C
Dielectric Strength	1,000V rms
Insulation Resistance, Minimum	1,000 Megohms
Noise, Maximum	100 Ohms
Actual Electrical Travel	356° + 1°
Tap Tolerance	±1°
End Voltage, Maximum	Linearity x Input Voltage

Environmental

Operating Temperature Range	Static: –65°C to +125°C Dynamic: –40°C to +125°C
Temperature Cycling	5 cycles, -65°C to +125°C (10% ΔR)
Shock, 6ms Sawtooth	50G's (0.1ms discontinuity max.)
Vibration	15G's, 10 to 2,000 Hz (5% ΔR, 0.1ms discontinuity max.)
Moisture Resistance	Ten 24 hour cycles (3% ΔR)
High Temperature Exposure	1,000 hours at 125°C (5% ΔR)
Rotational Life	1 Mil. Shaft Rev.
Rotational Load Life	1 mil. shaft rev. at rated wattage at 70°C (5% ΔR)

Specifications subject to change without notice.

General Note
TT Electronics reserves the right to make changes in product specification without notice or liability. All information is subject to TT Electronics' own data and is considered accurate at time of going to print.

© TT electronics plc

TT Electronics | BI Technologies
413 Rood RD, Suite 7
Calexico, CA 92231

Ph: +1 714 447 2345
www.ttelectronics.com/bi-technologies

Single-Turn Precision Potentiometer

Model 5311

Mechanical

Total Mechanical Travel		360° Continuous
Number of Gangs, Maximum		4
Weight, Nominal		3.7 oz. Single Gang 1.3 oz. Each Added Gang
Backlash, Maximum		1°
Shaft End Play, Maximum		.005"
	5611	**5613**
Shaft Runout, T.I.R., Maximum	.0005"	.001"
Pilot Diameter Runout, T.I.R., Maximum	.002"	.0015"
Lateral Runout, T.I.R., Maximum	.004"	.006"
Shaft Radial Play, Maximum	.004"	.002"
Starting Torque, Maximum (per gang)	1.5 oz.-in.	0.8 oz.-in.
Running Torque, Maximum (per gang)	1.1 oz.-in.	0.6 oz.-in.

Standard Resistance Values, Ohms

Total Resistance	Theoretical Resolution (% Nominal)	Tempco of Wire
1K	0.089	*±130 ppm/°C
2K	0.071	*±130 ppm/°C
5K	0.058	±20 ppm/°C
10K	0.053	±20 ppm/°C
20K	0.043	±20 ppm/°C
30K	0.040	± 20 ppm/°C
50K	0.040	± 20 ppm/°C

* Lower tempco available as a non-standard model (consult factory).

SPECIAL FEATURES

Center Tap	CT
Linearity Tape	LT
Rear Shaft Extension	RS
Flatted Shaft	FS
Slotted Shaft	SS
Shaft Lock (5611 only)	SL
Additional Gangs	2G or 3G or 4G

ORDERING INFORMATION

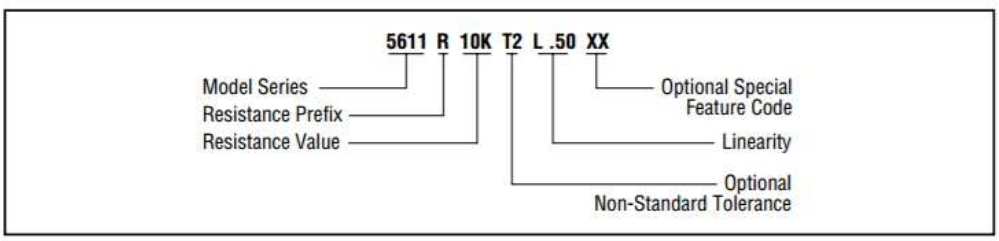

General Note
TT Electronics reserves the right to make changes in product specification without notice or liability. All information is subject to TT Electronics' own data and is considered accurate at time of going to print.

© TT electronics plc

TT Electronics | BI Technologies
413 Rood RD, Suite 7
Calexico, CA 92231
Ph: +1 714 447 2345
www.ttelectronics.com/bi-technologies

Single-Turn Precision Potentiometer

Model 5311

Model 5611
Bushing Mount with Sleeve Bearing

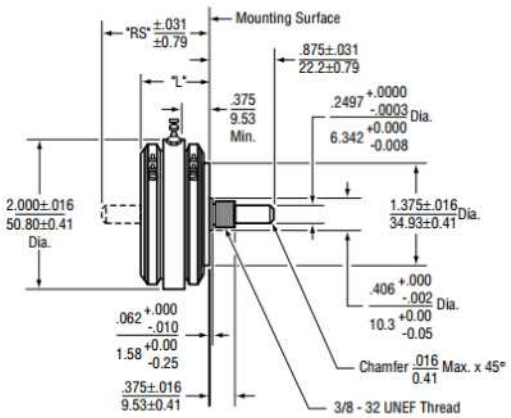

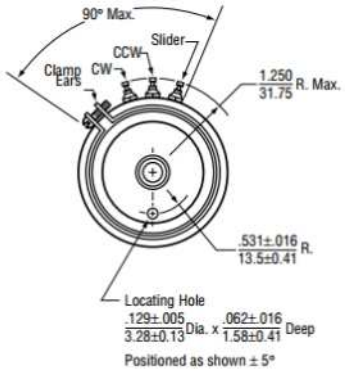

Dim. "L"	Dim. "RS"	No. of Cups
.905±.020 22.9±0.51	1.405 35.69	1
1.467±0.22 37.26±0.56	1.967 49.96	2
2.029±.024 51.54±0.61	2.529 64.24	3
2.591±.026 65.81±0.66	3.091 78.51	4

Model 5613
Servo Mount with Ball Bearing

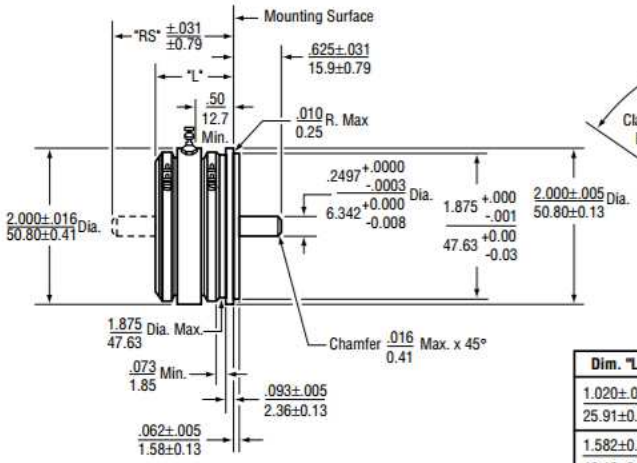

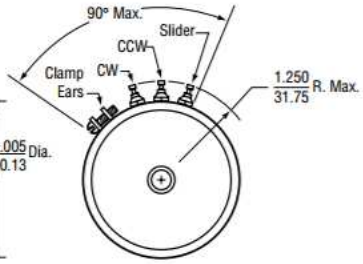

Dim. "L"	Dim. "RS"	No. of Cups
1.020±.015 25.91±0.38	1.520 38.61	1
1.582±0.17 40.18±0.43	2.082 52.88	2
2.144±.019 54.46±0.48	2.644 67.16	3
2.706±.021 68.73±0.53	3.206 81.43	4

METRIC CONVERSIONS

1 in.	25.4 mm	1 oz.-in.	0,007 N-m
1 oz.	28.4 gm	1 lb.-in.	0,113 N-m

General Note
TT Electronics reserves the right to make changes in product specification without notice or liability. All information is subject to TT Electronics' own data and is considered accurate at time of going to print.

© TT electronics plc

TT Electronics | BI Technologies
413 Rood RD, Suite 7
Calexico, CA 92231
Ph: +1 714 447 2345
www.ttelectronics.com/bi-technologies

CIRCUIT DIAGRAM

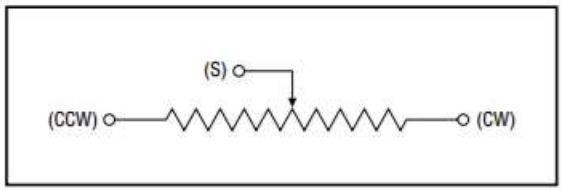

NOTES

Metric equivalents, based on 1 inch = 25.4mm are rounded to the same number of significant figures as in the original English units and are provided for general information only.

Tolerances unless otherwise specified:
Linear = ± .01 inches
(.25mm)
Angular = ± 2 degrees

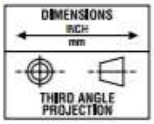

General Note
TT Electronics reserves the right to make changes in product specification without notice or liability. All information is subject to TT Electronics' own data and is considered accurate at time of going to print.

© TT electronics plc

TT Electronics | BI Technologies
413 Rood RD, Suite 7
Calexico, CA 92231
Ph: +1 714 447 2345
www.ttelectronics.com/bi-technologies