3.3 Wire To board Conn. receptacle terminal
製品名 PRODUCT NAME :3.3 Wire To Wire Conn. receptacle/plug terminal

## 1. 適用範囲 SCOPE

本仕様書は下記のターミナルの圧着に伴う諸元について規定する。
THIS STANDARD SPECIFIES THE DIMENSIONS AFTER CRIMPING OF THE TERMINALS UNDERMENTIONED.

| ターミナル番号 PARTS NUMBER | 適用電線範囲 WIRE SIZE | | 絶縁被覆外径 INSULATION DIA. |
|---|---|---|---|
| | AWG | mm² | |
| 501395-1*00<br>56187-8*00<br>(RECEPTACLE TERMINAL) | #20-18 | 0.51-0.87 | ∅ 1.75 ～ 2.6mm |
| 56265-8*00<br>(PLUG TERMINAL) | | | |

## 2. 各部の名称 DEFINITION

第1図
FIG.1

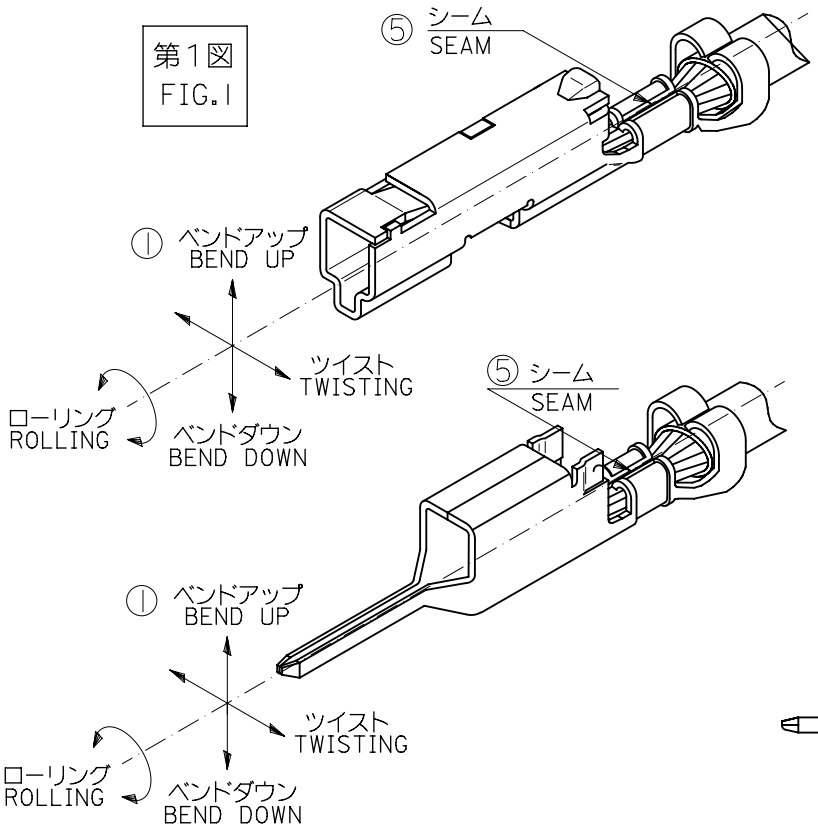


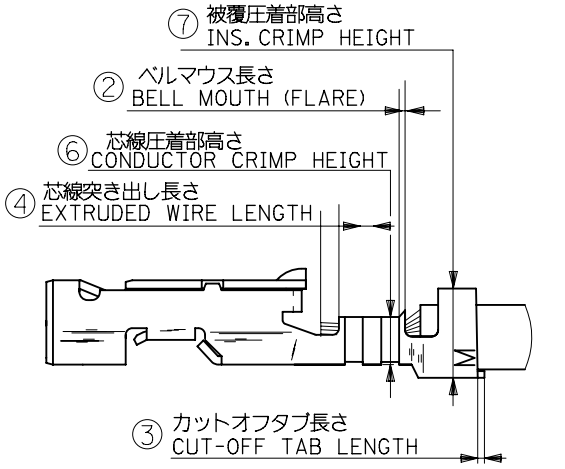


56187-8*00
501395-1*00 (RECEPTACLE TERMINAL)

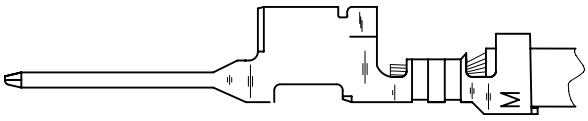

56265-8*00 (PLUG TERMINAL)

THIS DRAWING CONTAINS INFORMATION THAT IS PROPRIETARY TO MOLEX ELECTRONIC TECHNOLOGIES, LLC AND SHOULD NOT BE USED WITHOUT WRITTEN PERMISSION

| | |
|---|---|
| DIMENSION UNITS | MM |
| SCALE | NTS |
| GENERAL TOLERANCES (UNLESS SPECIFIED) | |
| ANGULAR TOL ± ° | |
| 4 PLACES ± | |
| 3 PLACES ± | |
| 2 PLACES ± | |
| 1 PLACE ± | |
| 0 PLACES ± | |
| DRAFT WHERE APPLICABLE MUST REMAIN WITHIN DIMENSIONS | |

CURRENT REV DESC: RETRACTED AS PER SFC#01257582

EC NO: 844044
DRWN: SAMPRS 2025/12/19
CHK'D: GGA 2026/01/06
APPR: GGA 2026/01/06

INITIAL REVISION:
DRWN: H.II 2002/03/25
APPR: T.YAMAGUCHI 2002/03/25

CRIMP SPEC.FOR 56187
501395 56265

PRODUCT CUSTOMER DRAWING

| DOCUMENT NUMBER | DOC TYPE | DOC PART | REVISION |
|---|---|---|---|
| CS-56187-001 | PSD | 001 | F |

| THIRD ANGLE PROJECTION | DRAWING | SERIES | MATERIAL NUMBER | CUSTOMER | SHEET NUMBER |
|---|---|---|---|---|---|
| | A-SIZE | 56187 | SEE TABLE | GENERAL MARKET | 1 OF 3 |

| DOCUMENT STATUS | P1 | RELEASE DATE | 2026/01/06 15:03:20 |
|---|---|---|---|

FORMAT: portrait-master-tb-prod-A
REVISION: D1
DATE: 2021/05/01

## 3. 仕様 SPECIFICATION

| 第1図の箇所 NO. OF FIG.1 | 項目 ITEM | 仕様 REQUIREMENT |
|---|---|---|
| ① | ベンドアップ BEND UP | 4° 以下 MAX. |
| | ベンドダウン BEND DOWN | 4° 以下 MAX. |
| | ツイスト TWISTING | 4° 以下 MAX. |
| | ローリング ROLLING | 8° 以下 MAX. |
| ② | ベルマウス（参考値） BELL MOUTH (REF.) | 0.05～ 0.6mm |
| ③ | カットオフタブ長さ ECUT-OFF TAB LENGTH | 0 ～0.25mm |
| ④ | 芯線突き出し長さ EXTRUDED WIRE LENGTH | 0 ～ 1.0mm |
| ⑤ | シーム SEAM | シームは閉じていること。ただし開きのある場合は芯線の飛び出しのないこと。 SEAM SHALL NOT BE OPENED AND NOT WIRE ALLOWED OUT OF CRIMPING THE AREA. |
| ——‖—— | 絶縁被覆むき長さ（参考） WIRE STRIP LENGTH (REF.) | 2.8～ 3.2mm |

## 4. 圧着条件（第1図の ⑥ 及び ⑦） CONDITIONS( ⑥ AND ⑦ OF FIG.1)

電線（UL1007相当）を 圧着した際の要件は、下記による。
AFTER CRIMPING THE WIRE (EQUIVALENT TO UL1007), THE CRIMPED AREAS SHOULD BE AS FOLLOWS.

| 電線番号 WIRE NO. | 圧着機番号 CRIMP DIE MODEL NO. | ターミナル番号 TERMINAL NO. | 芯線圧着部 CONDUCTOR (第1図 ⑥) (⑥OF FIG.1) 工具マーク TOOL MARK | 芯線圧着部 CONDUCTOR (第1図 ⑥) (⑥OF FIG.1) 高さ HEIGHT(mm) | 被覆圧着部（参考） INSULATUON (第1図 ⑦) (⑦OF FIG.1) 工具マーク TOOL MARK | 被覆圧着部（参考） INSULATUON (第1図 ⑦) (⑦OF FIG.1) 高さ HEIGHT(mm) | 圧着部引っ張り強度 CRIMP STRENGTH (N {kgf}) |
|---|---|---|---|---|---|---|---|
| #18 | 57411 -3000 | 56187-8*00 501395-1*00 & 56265-8*00 | D | 1.13 ～1.23 | 5 | 2.85 | 88.2(9.0) 以上 MIN. |
| #20 | | | C | 0.99 ～1.09 | 5 | 2.75 | 58.8(6.0) 以上 MIN. |

## 5. 消耗部品一覧表 PERISHABLE PARTS LIST

| 部品名称 PART NAME | 部品番号 PART NO. |
|---|---|
| アンビル ANVIL | 57411-2001 |
| 芯線パンチ COND. PUNCH | 57411-2002 |
| 被覆パンチ INS. PUNCH | 57411-2003 |
| フローティング シェアー FLOATING SHEAR | 57411-2004 |
| フロント ホルダー FRONT HOLDER | 57360-2002 |

THIS DRAWING CONTAINS INFORMATION THAT IS PROPRIETARY TO MOLEX ELECTRONIC TECHNOLOGIES, LLC AND SHOULD NOT BE USED WITHOUT WRITTEN PERMISSION

DIMENSION UNITS: MM | SCALE: NTS

GENERAL TOLERANCES (UNLESS SPECIFIED)

ANGULAR TOL ± °

| | |
|---|---|
| 4 PLACES | ± |
| 3 PLACES | ± |
| 2 PLACES | ± |
| 1 PLACE | ± |
| 0 PLACES | ± |

DRAFT WHERE APPLICABLE MUST REMAIN WITHIN DIMENSIONS

CURRENT REV DESC: RETRACTED AS PER SFC#01257582

EC NO: 844044

| | | |
|---|---|---|
| DRWN: | SAMPRS | 2025/12/19 |
| CHK'D: | GGA | 2026/01/06 |
| APPR: | GGA | 2026/01/06 |

INITIAL REVISION:

| | | |
|---|---|---|
| DRWN: | H.II | 2002/03/25 |
| APPR: | T.YAMAGUCHI | 2002/03/25 |

THIRD ANGLE PROJECTION | DRAWING: A-SIZE | SERIES: 56187

molex

CRIMP SPEC.FOR 56187
501395 56265

PRODUCT CUSTOMER DRAWING

| DOCUMENT NUMBER | DOC TYPE | DOC PART | REVISION |
|---|---|---|---|
| CS-56187-001 | PSD | 001 | F |

| MATERIAL NUMBER | CUSTOMER | SHEET NUMBER |
|---|---|---|
| SEE TABLE | GENERAL MARKET | 2 OF 3 |

| DOCUMENT STATUS | P1 | RELEASE DATE | 2026/01/06 15:03:20 |
|---|---|---|---|

FORMAT: portrait-master-tb-prod-A
REVISION: D1
DATE: 2021/05/01

molex

# CRIMPING SPECIFICATION

molex

LANGUAGE
JAPANESE
ENGLISH

| REV. | REV. RECORD | DATE | EC NO. | WRTTN: | CH'K: |
|---|---|---|---|---|---|
| A | RELEASED | '02/03/18 | J2002-2335 | H.II | T.YAMAGUCHI |
| B | REVISED | '02/08/21 | J2003-0456 | H.II | T.YAMAGUCHI |
| C | REVISED | 05/01/27 | J2005-2177 | T.ODA | K.ASAKAWA |
| D | REVISED | 05/04/15 | J2005-3082 | T.ODA | K.ASAKAWA |
| F | RETRACTED PART NUMBER: 561878000 | 25/12/22 | ER-844044 | SAMPRS | |
| | | | | | |
| | | | | | |
| | | | | | |
| | | | | | |
| | | | | | |
| | | | | | |
| | | | | | |
| | | | | | |
| | | | | | |

THIS DRAWING CONTAINS INFORMATION THAT IS PROPRIETARY TO MOLEX ELECTRONIC TECHNOLOGIES, LLC AND SHOULD NOT BE USED WITHOUT WRITTEN PERMISSION

| DIMENSION UNITS | SCALE |
|---|---|
| MM | NTS |

GENERAL TOLERANCES (UNLESS SPECIFIED)

| | |
|---|---|
| ANGULAR TOL | ± ° |
| 4 PLACES | ± |
| 3 PLACES | ± |
| 2 PLACES | ± |
| 1 PLACE | ± |
| 0 PLACES | ± |

DRAFT WHERE APPLICABLE MUST REMAIN WITHIN DIMENSIONS

CURRENT REV DESC: RETRACTED AS PER SFC#01257582

EC NO: 844044
DRWN: SAMPRS 2025/12/19
CHK'D: GGA 2026/01/06
APPR: GGA 2026/01/06

INITIAL REVISION:
DRWN: H.II 2002/03/25
APPR: T.YAMAGUCHI 2002/03/25

molex

CRIMP SPEC.FOR 56187
501395 56265

PRODUCT CUSTOMER DRAWING

| DOCUMENT NUMBER | DOC TYPE | DOC PART | REVISION |
|---|---|---|---|
| CS-56187-001 | PSD | 001 | F |

| THIRD ANGLE PROJECTION | DRAWING | SERIES | MATERIAL NUMBER | CUSTOMER | SHEET NUMBER |
|---|---|---|---|---|---|
| | A-SIZE | 56187 | SEE TABLE | GENERAL MARKET | 3 OF 3 |

| DOCUMENT STATUS | P1 | RELEASE DATE | 2026/01/06 15:03:20 |
|---|---|---|---|

FORMAT: portrait-master-tb-prod-A
REVISION: D1
DATE: 2021/05/01