HAND CRIMP TOOL SPECIFICATION SHEET Order No. 63811-0400

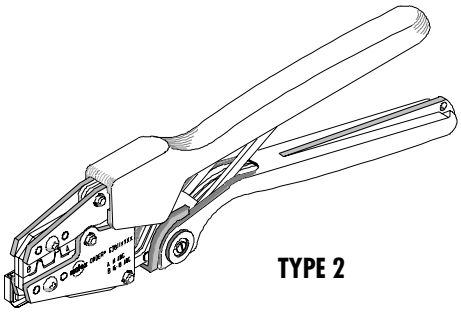

TYPE 2

FEATURES

- Small handle spread which make this style tool ideally suited for end users
- Ratchet with safety release that ensures consistent performance
- A precision user-friendly terminal locator wire stop holds terminals in the proper crimping position

SCOPE

Terminal Series No.	Wire Size		Insulation Diameter		Strip Length	
	AWG	mm^2	mm	In.	mm	In.
43374-0001	14-18	2.00-0.80	2.36-3.56	.093-.140	3.96-5.54	.156-.218
43375-0001	14-18	2.00-0.80	2.36-3.56	.093-.140	3.96-5.54	.156-.218

DEFINITION OF TERMS

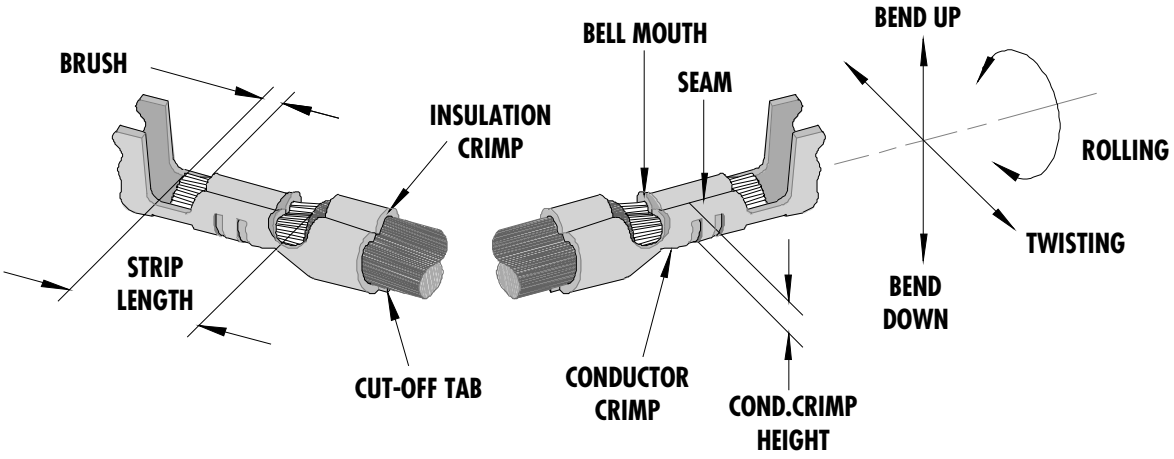

The above terminal drawing is a generic terminal representation. It is not an image of a terminal listed in the scope.

CONDITIONS:

After crimping, the conductor profiles should measure the following, see notes on page 3.

Terminal Series No.	Wire Size		Cond. Crimp Height (Ref)		Punch Width (Ref) Cond.		Pull Force Min.		Profile	
	AWG	mm^2	mm	In.	mm	In.	N	Lb.	A	B
43374-0001	14	2.00	1.65-1.75	.065-.069	2.50	.098	222.4	50.00	X	
43374-0001	16	1.30	1.47-1.57	.058-.062	2.50	.098	133.5	30.00		X
43374-0001	18	0.80	1.35-1.43	.053-.056	2.50	.098	89.0	20.00		X
43375-0001	14	2.00	1.65-1.75	.065-.069	2.50	.098	222.4	50.00	X	
43375-0001	16	1.30	1.47-1.57	.058-.062	2.50	.098	133.5	30.00		X
43375-0001	18	0.80	1.35-1.43	.053-.056	2.50	.098	89.0	20.00		X

OPERATION

Open the tool by squeezing the handles together, at the end of the closing stroke, the ratchet mechanism will release the handles and the hand tool will spring open.

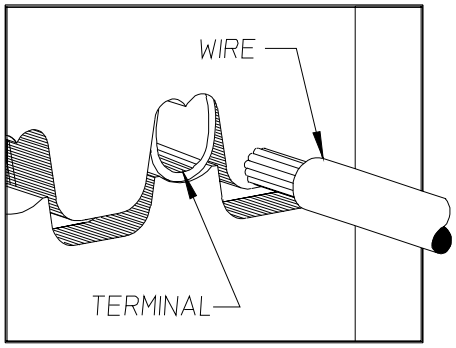

Figure 1

Crimping Terminals

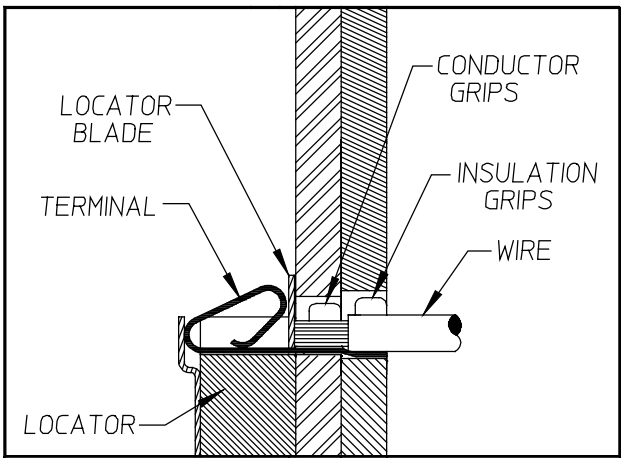

Figure 2

1. Lift the locator blade and place the terminal into the correct die profile (A or B), release the locator blade. Not all tools are equipped with a locator or locator blade.
2. Partially close the tool until the terminal is held in place, (See Figure 2).
3. Place a wire into the terminal and up against the locator blade. See Figure 3. On tools without locators line the wire up with the conductor and insulation grips visually.
4. Close the tool until the ratchet releases, (See Figure 4).
5. Lift the locator blade or wire stop up.
6. Carefully remove the crimped terminal.

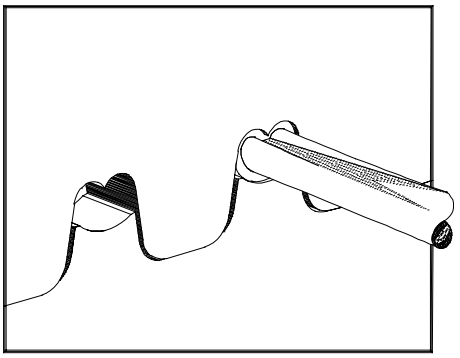

Figure 3

Maintenance

It is recommended that each operator of the tool be made aware of, and responsible for, the following maintenance steps:

1. Remove dust, moisture and other contaminants with a clean brush, or soft, lint free cloth.
2. Do not use any abrasive materials that could damage the tool.
3. Make certain all pins; pivot points and bearing surfaces are protected with a thin coat of high quality machine oil. Do not oil excessively.
4. When tool is not in use, keep the handles closed to prevent objects from becoming lodged in the crimping dies, and store the tool in a clean, dry area.

Miscrimps or Jams

Should this tool ever become stuck or jammed in a partially closed position, **Do Not** force the handles open or closed. The tool will open easily by lifting the ratchet release lever (See Figure 4).

How To Adjust Tool Crimp Force (See Figure 4)

It may be necessary over the life of the tool to adjust tool-crimping force. Listed below are the steps required to adjust the crimping force of the hand tool to obtain proper crimp conditions:

1. Remove the screw and plastic cover washer. Note the setting wheel position.
2. Lift the setting wheel off the axle. Turn the eccentric axle with a screwdriver.
3. Turning the eccentric axle counter-clockwise will increase handle force.
4. Replace the setting wheel to the axle, aligning the nearest notch in the setting wheel to the dowel pin.
5. Replace the plastic cover washer and screw.
6. Check to the crimp specifications after tool crimp force is adjusted.

Warranty

This tool is for electrical terminal crimping purposes only. This tool is made of the best quality materials. All vital components are long life tested. All tools are warranted to be free of manufacturing defects for a period of **30 days.** Should such a defect occur, we would exchange the tool free of charge. This will not be applicable to altered, misused, or damaged tools. This tool is designed for hand use only. Any clamping, fixturing, or use of handle extensions voids this warranty.

Hand held crimping tools are intended for low volume, prototyping, or repair requirements only.

Caution: Repetitive use of this tool should be avoided.

Notes:

1. This tool should only be used for the terminals and wire gauges specified on this sheet.
2. This tool is not adjustable for crimp height, however crimp force is adjustable (See instructions above). Variations in tools, terminals, wire stranding and insulation types may affect crimp height.
3. This tool is intended for standard conductor sizes. It may not give a good insulation crimp support for all insulation sizes.
4. Molex does not repair hand tools (see warranty above) The replacement parts listed are the only parts available for repair. If the handles or crimp tooling is damaged or worn, a new tool must be purchased.
5. Pull force should be used as the final criteria for an acceptable crimp. Pull force is measured with no influence from the insulation crimp. The insulation should be stripped long (1/2 in.) so the insulation grips on the terminal do not grip the wire insulation or the conductor. Refer to Molex Quality Crimping Handbook 63800-0029 for additional information on crimping and crimp testing.
6. Molex does not certify crimp hand tools.

CAUTION: Molex crimp specifications are valid only when used with Molex terminals, applicators and tooling.

PARTS LIST

Item Number	Order Number	Description	Quantity
1	63811-0475	Locator Assembly**	1
2	64000-0076	Repair Kit (Not included)	0

** Not all tools are equipped with a locator or locator blade.

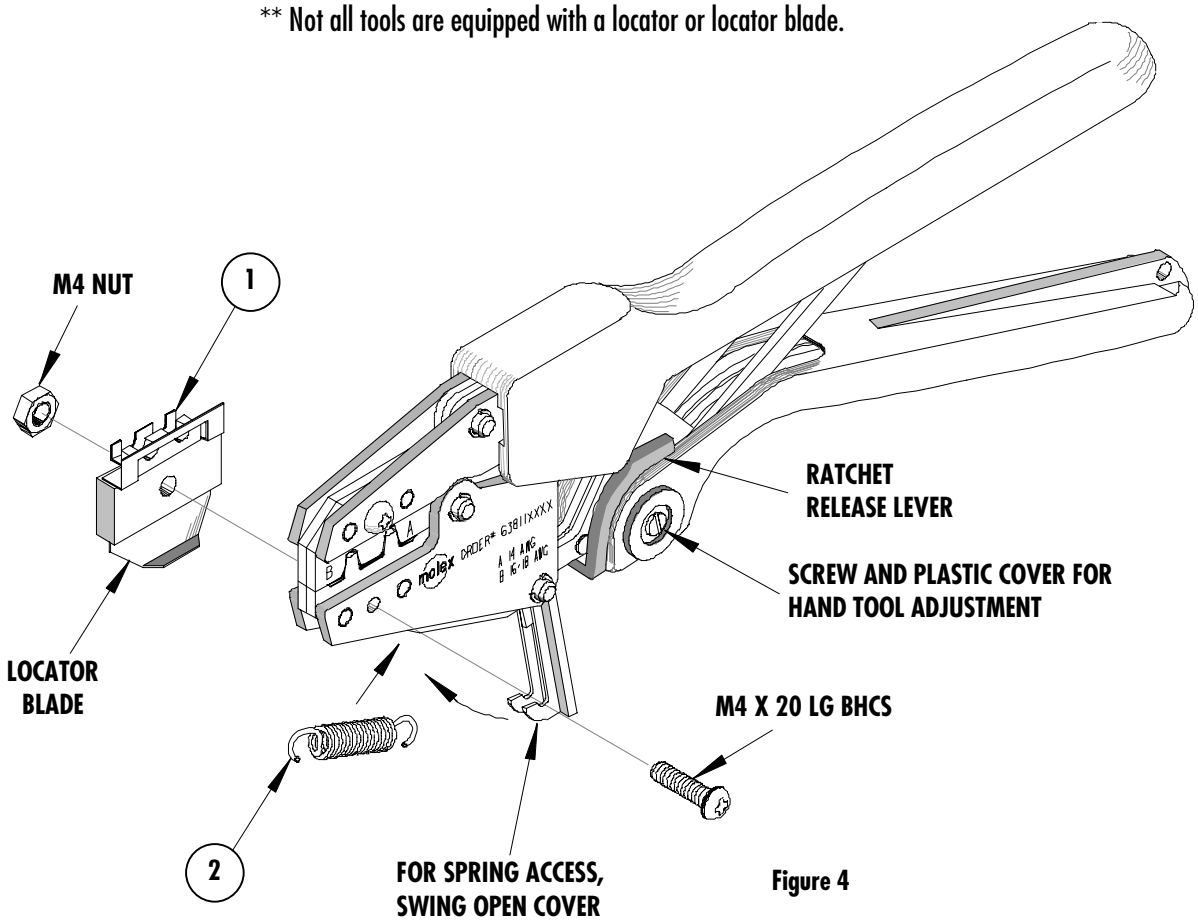

Figure 4

Molex Application Tooling Group
1150 E. Diehl Road
Naperville, IL, 60563
Tel: 630-969-4550
Fax: 630-505-0049

Visit our Web site at http://www.molex.com