HAND CRIMP TOOL
Operating Instruction and Specification Sheet
Order No. 63811-2300

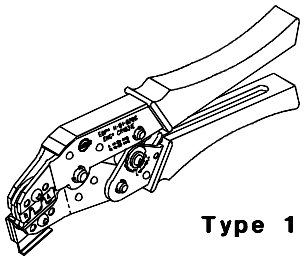
Type 1

FEATURES

- Small handle spread which make this style tool ideally suited for end users
- Ratchet with safety release that ensures consistent performance
- A precision user-friendly terminal locator wire stop holds terminals in the proper crimping position

SCOPE

Products: 3.96mm (.156") Pitch KK® Crimp Terminal for 22-26 AWG

The following is a partial list of the product part numbers and their specifications that this tool is designed to run. We will be adding to this list and an up to date copy is available on www.molex.com.

Terminal Series No.	Terminal Order No.		Wire Size		Insulation Diameter		Strip Length	
			AWG	mm²	mm	In.	mm	In.
2578	08-50-0019	08-56-0122	22 - 26	0.35-0.12	1.20-1.52	.047-.060	2.54-3.17	.100-.125
	08-50-0062	08-56-0163						
	08-50-0066	08-58-0126						
	08-50-0062	08-60-0004						
	08-50-0108	08-65-0107						
	08-50-0112	08-65-0111						
	08-50-0134	08-65-0117						
	08-52-0117	40-01-1119						
	08-55-0106	40-07-1106						
	08-55-0132	50-29-1878						
	08-56-0108							
5168	08-70-0019	08-70-0099	22 - 26	0.35-0.12	1.20-1.52	.047-.060	2.54-3.17	.100-.125
7258	08-50-0185	08-56-0182	22 - 26	0.35-0.12	1.20-1.52	.047-.060	2.54-3.17	.100-.125
	08-52-0125	08-58-0134						
	08-52-0127	08-65-0122						
	08-56-0124							

DEFINITION OF TERMS

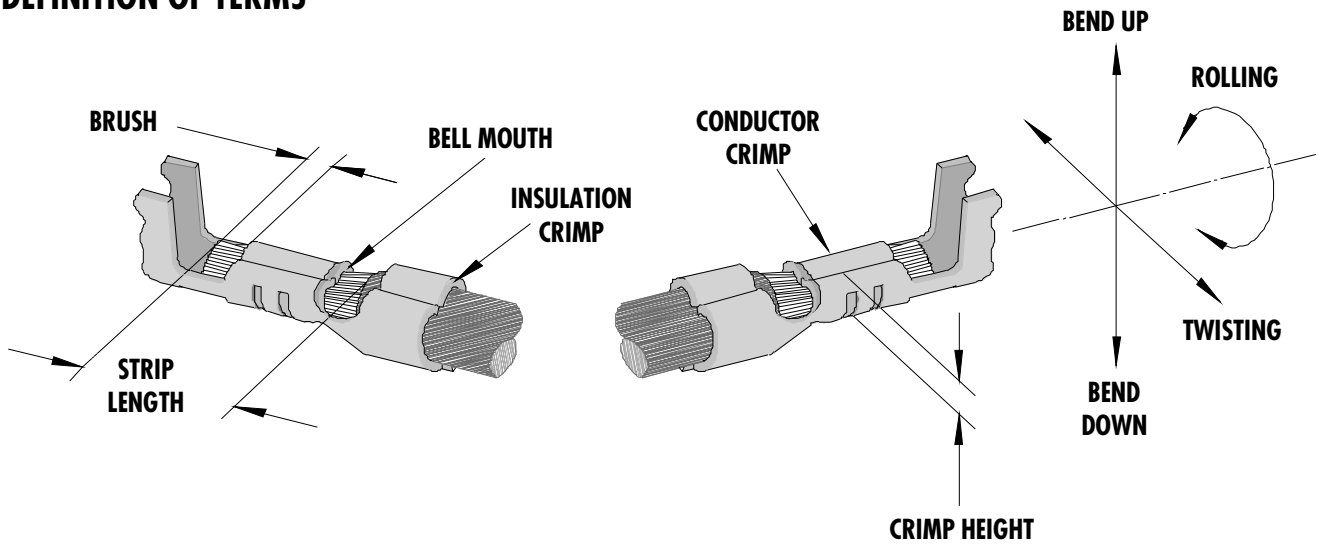

The above terminal drawing is a generic terminal representation. It is not an image of a terminal listed in the scope.

CONDITIONS:

After crimping, the conductor profiles should measure the following (see notes on page 4).

Terminal Series No.	Wire Size		Cond. Crimp Height (Ref)		Punch Width (Ref)				Pull Force Min.		Profile	
					Cond.		Ins.					
	AWG	mm^2	mm	In.	mm	In.	mm	In.	N	Lb.	A	B
2578	22	0.35	.94-1.04	.037-.041	1.56	.061	1.94	.076	44.5	10.00	X	
2578	24	0.20	.84-.94	.033-.037	1.56	.061	1.56	.061	35.6	8.00		X
2578	26	0.12	.84-.94	.033-.037	1.56	.061	1.56	.061	26.7	6.00		X
5168	22	0.35	.94-1.04	.037-.041	1.56	.061	1.94	.076	44.5	10.00	X	
5168	24	0.20	.84-.94	.033-.037	1.56	.061	1.56	.061	35.6	8.00		X
5168	26	0.12	.84-.94	.033-.037	1.56	.061	1.56	.061	26.7	6.00		X
7258	22	0.35	.94-1.04	.037-.041	1.56	.061	1.94	.076	44.5	10.00	X	
7258	24	0.20	.84-.94	.033-.037	1.56	.061	1.56	.061	35.6	8.00		X
7258	26	0.12	.84-.94	.033-.037	1.56	.061	1.56	.061	26.7	6.00		X

OPERATION

Open the tool by squeezing the handles together, at the end of the closing stroke, the ratchet mechanism will release the handles, and the hand tool will spring open.

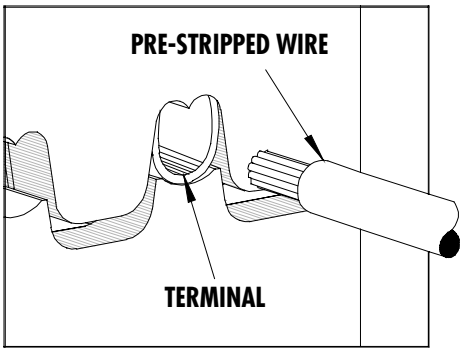

Figure 1

Crimping Terminals

1. Lift the locator blade and place the terminal into the correct die profile (A or B), release the locator blade. Not all tools are equipped with a locator or locator blade.

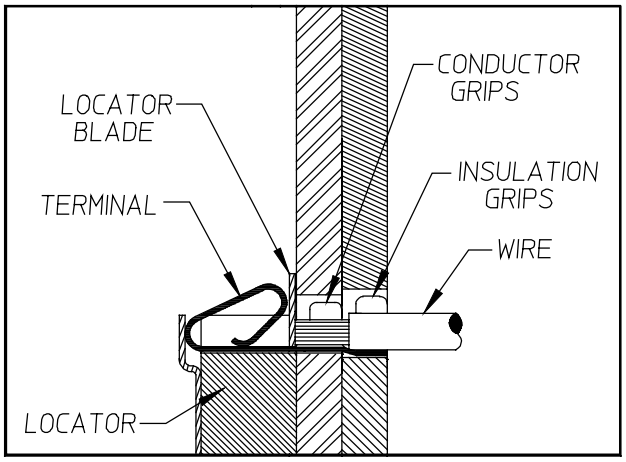

Figure 2

2. Partially close the tool until the terminal is held in place. See Figure 2.
3. Place a wire into the terminal and up against the locator blade. See Figure 3. On tools without locators line the wire up with the conductor and insulation grips visually.
4. Close the tool until the ratchet releases. See Figure 4.
5. Lift the locator blade or wire stop up.
6. Carefully remove the crimped terminal.

Maintenance

It is recommended that each operator of the tool be made aware of, and responsible for, the following maintenance steps:

1. Remove dust, moisture, and other contaminants with a clean brush, or soft, lint free cloth.
2. Do not use any abrasive materials that could damage the tool.
3. Make certain all pins; pivot points and bearing surfaces are protected with a thin coat of high quality machine oil. Do not oil excessively.
4. When tool is not in use, keep the handles closed to prevent objects from becoming lodged in the crimping dies, and store the tool in a clean, dry area.

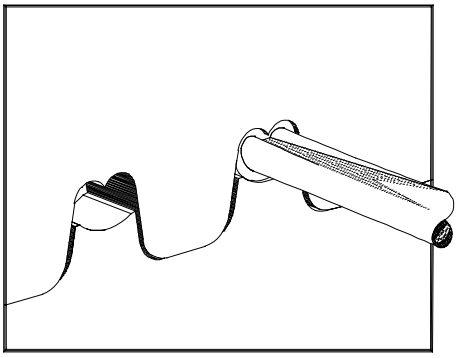

Figure 3

Miscrimps or Jams

Should this tool ever become stuck or jammed in a partially closed position, **Do Not** force the handles open or closed. The tool will open easily by lifting the ratchet release lever (See Figure 4).

How To Adjust Tool Crimp Force (See Figure 4)

It may be necessary over the life of the tool to adjust tool-crimping force. Listed below are the steps required to adjust the crimping force of the hand tool to obtain proper crimp conditions:

1. Remove the screw and washer. Located over the adjustment ring.
2. Lift the adjusting ring slightly, off of the locating pin.
3. Turn the adjusting ring in the desired direction (L= less force, T= more force) to increase or decrease crimp pressure.
4. Press the adjusting wheel flat against the tool and engage the locking pin.
5. Replace the washer and screw.
6. Check the crimp specifications after tool crimp force is adjusted.

Warranty

This tool is for electrical terminal crimping purposes only. This tool is made of the best quality materials. All vital components are long life tested. All tools are warranted to be free of manufacturing defects for a period of **30 days.** Should such a defect occur, we would exchange the tool free of charge. This will not be applicable to altered, misused, or damaged tools. This tool is designed for hand use only. Any clamping, fixturing, or use of handle extensions voids this warranty.

Hand held crimping tools are intended for low volume, prototyping, or repair requirements only.

CAUTION: Repetitive use of this tool should be avoided.

Notes:

1. This tool should only be used for the terminals and wire gauges specified on this sheet.
2. This tool is not adjustable for crimp height, however crimp force is adjustable (See instructions above). Variations in tools, terminals, wire stranding and insulation types may affect crimp height.
3. This tool is intended for standard conductor sizes. It may not give a good insulation crimp support for all insulation sizes.
4. Molex does not repair hand tools (see warranty above) The replacement parts listed are the only parts available for repair. If the handles or crimp tooling is damaged or worn, a new tool must be purchased.
5. Pull force should be used as the final criteria for an acceptable crimp. Pull force is measured with no influence from the insulation crimp. The insulation should be stripped long (1/2 in.) so the insulation grips on the terminal do not grip the wire insulation or the conductor. Refer to Molex Quality Crimping Handbook 63800-0029 for additional information on crimping and crimp testing.
6. Molex does not certify crimp hand tools.

CAUTION: Molex crimp specifications are valid only when used with Molex terminals, applicators and tooling.

PARTS LIST

Item Number	Order Number	Description	Quantity
1	63811-2375	Locator Assembly**	1
2	11-11-0324	Spring (Main)	1
3	11-11-0320	Spring (Ratchet)	1

** Not all tools are equipped with a locator or locator blade.

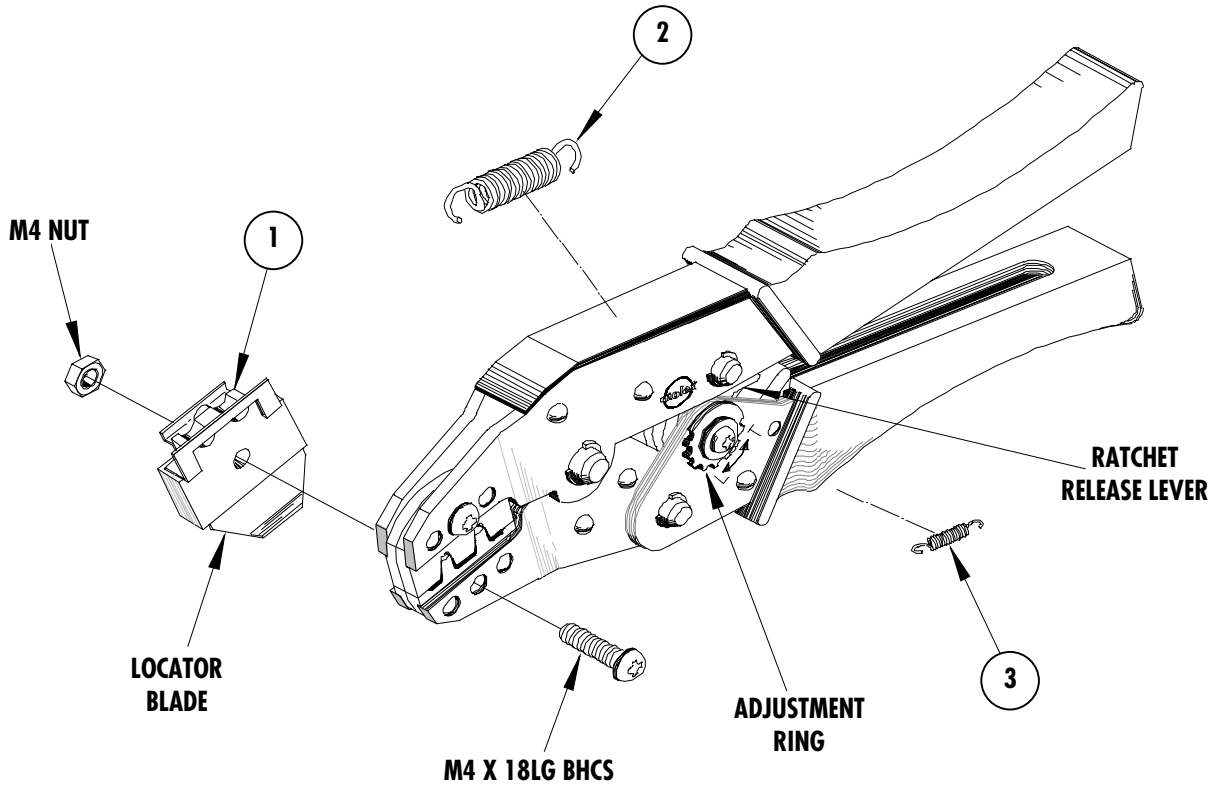

Figure 4

Molex Application Tooling Group
2200 Wellington Court
Lisle, IL 60532
Tel: (630) 969-4550
Fax: (630) 505-0049

Visit our Web site at http://www.molex.com