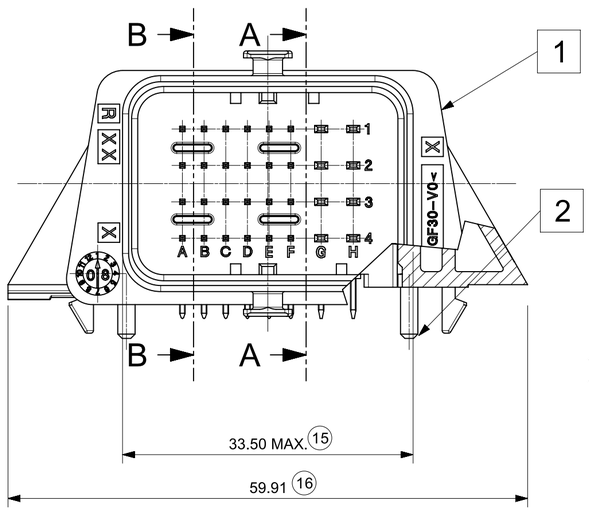

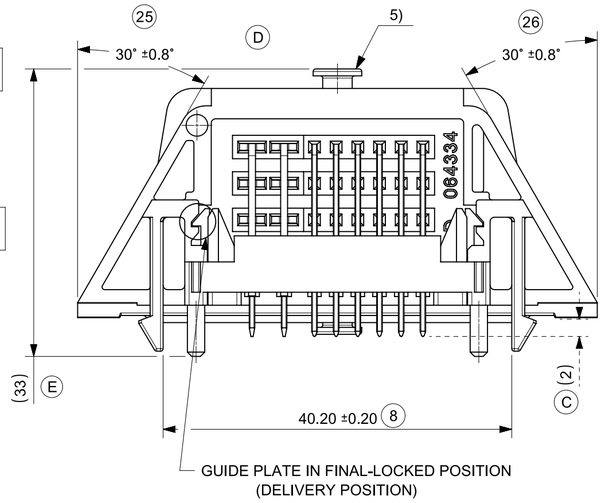

NOTES

1 - GENERAL TOLERANCE ACC. DIN 16901 GROUP 130

2 - SEALING AREA (NO BURR, SCRATCHES, CONTAMINATION, SHRINK DEPENDED WARPAGE AND TOOL SPLITTING LINES ALLOWED)

3 - MATERIAL MARKING
ADDITIONAL MARKING POSSIBLE
e.g.: - CAVITY NO.
- MATERIAL NO.
- VERSION NO.
- TRACEABILITY MARKING (INK-JET OR LASERMARKING (SPECIAL PLASTIC MATERIAL NEEDED))
- etc.

4 - TOOLING SPLITTING LINES FOR AIR VENT (2x)

(C) 5 - COLOUR CODING ON INTERFACE (BROWN AND BLUE)

(D) 6 - MARKING FOR HARNESS DIRECTION: APPLY THERMAL RIBBON

7 - MATES WITH CMC CONNECTOR 32CKT
MATERIAL NO's:
RIGHT WIRE OUTPUT BROWN CODING 643193219
RIGHT WIRE OUTPUT BLACK CODING 643193211
RIGHT WIRE OUTPUT BLUE CODING 643193216
(C) LEFT WIRE OUTPUT BROWN CODING 643191219
LEFT WIRE OUTPUT BLACK CODING 643191211
LEFT WIRE OUTPUT BLUE CODING 643191216

(C) 8 - THE PRODUCT INTERFACE INFORMATION SEE SD-98644-006

(F1) 9 - POTTING MATERIAL IS SILICONE,SEE BOM FOR GLUE TYPE.

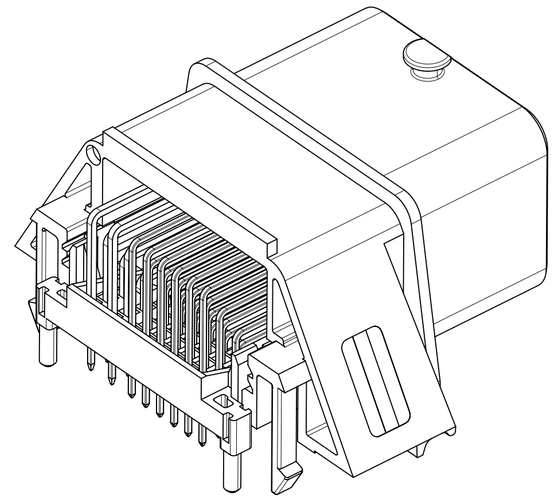

3D-VIEW

TECHNICAL PERFORMANCE CHARACTERISTICS

LOCKING FEATURES RETENTION FORCE AVERAGE: >260N
THE LOWEST RETENTION FORCE VALUE >240N

PIN RETENTION AND TRACTION FORCES:

PIN	SIZE [mm]	RETENTION FORCES
PIN 0.635	0.635 x 0.635	≥ 30N
PIN 1.5	1.5 x 0.8	≥ 60N

(B1) SOLDERABILITY:
TESTING ACC. DIN IEC 60068-2-20 WITHOUT PRE-AGING

ALL FURTHER TECHNICAL PERFORMANCE CHARACTERISTICS ARE SHOWN IN PRODUCTS AND TEST SPECIFICATION OF THE RELEVANT FEMALE CONNECTORS: PS-64319-001

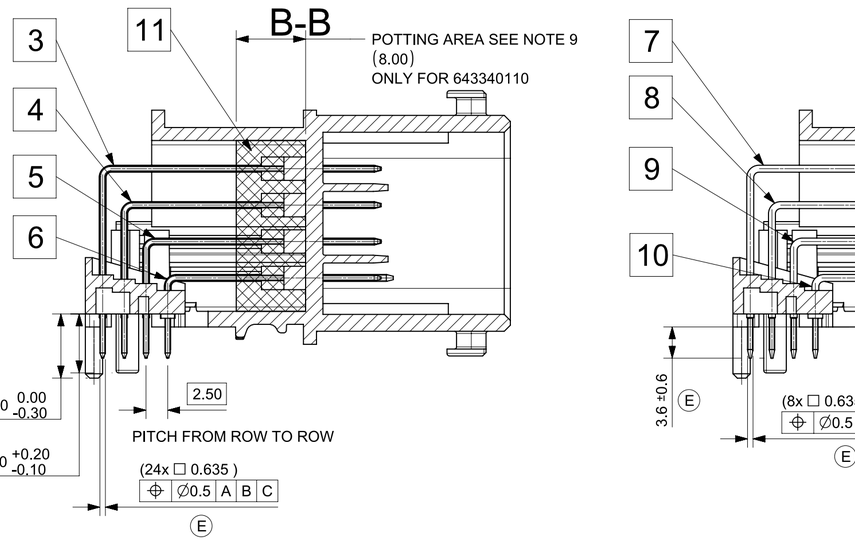

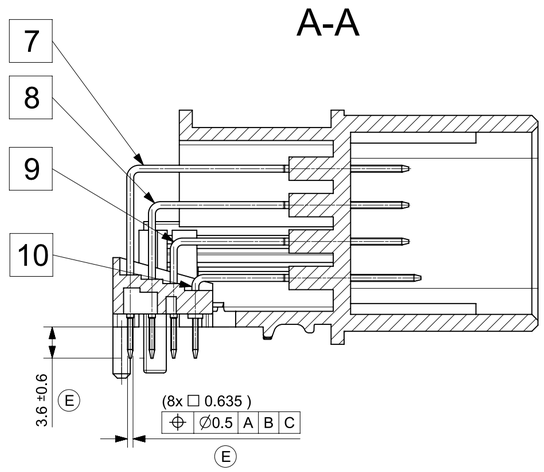

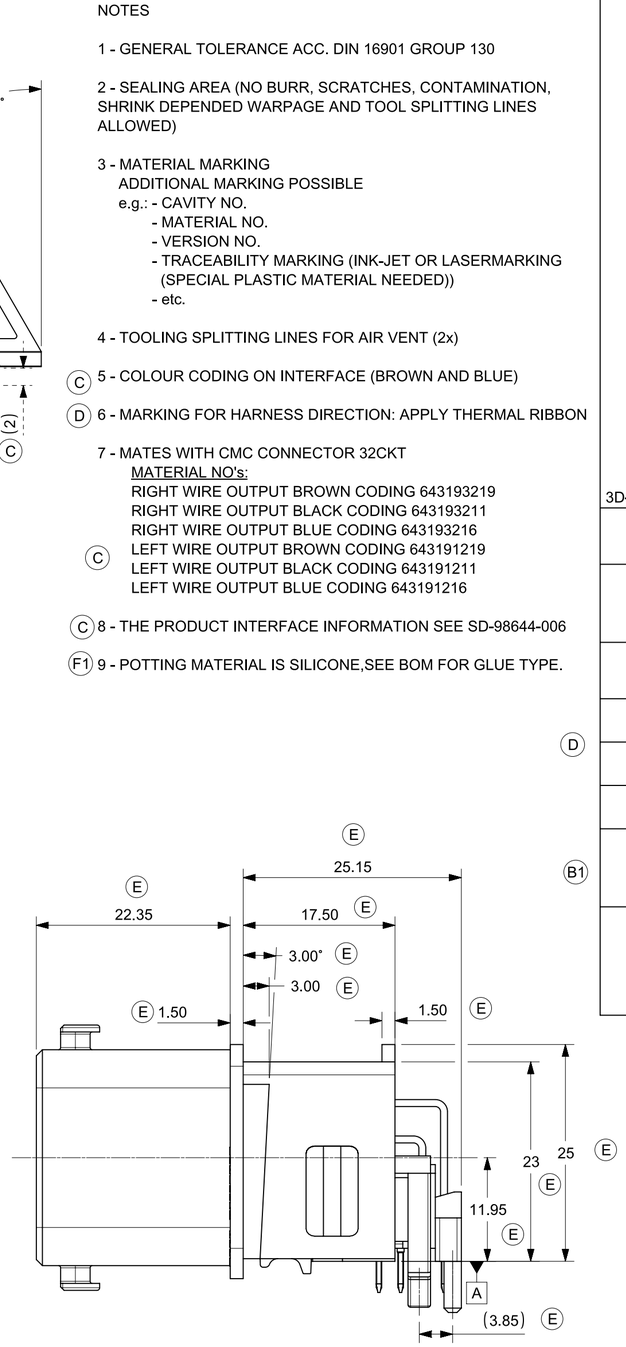

(D)

INSPECTION BALLOON NUMBER LOG
PER DRAWING REVISION: C
LAST BALLOON NUMBER USED: 26
ADDED BALLOON NUMBER USED:
REMOVED BALLOON NUMBER: 4, 5, 10

BILL OF MATERIAL

ITEM	DESCRIPTION	RAW MATERIAL	PLATING [µm] BARRIER (OVERALL)	PLATING [µm] FINISH (OVERALL)	UNIT	AMOUNT	
11	GLUE	SIPC 9030	---	---	PIECE	1	(F1)
10	Pin 1.5 Row 4	CuZn30	Ni 1.3-3.8µm	Sn 2-4µm	PIECE	2	
9	Pin 1.5 Row 3				PIECE	2	
8	Pin 1.5 Row 2				PIECE	2	
7	Pin 1.5 Row 1				PIECE	2	
6	Pin 0.64 Row 4		Ni 1.3-2.2µm		PIECE	6	(C)
5	Pin 0.64 Row 3				PIECE	6	
4	Pin 0.64 Row 2				PIECE	6	
3	Pin 0.64 Row 1				PIECE	6	
2	GUIDE PLATE	PBT GF30-V0 BLK	---	---	PIECE	1	
1	HOUSING	PBT GF30-V0 BLK	---	---	PIECE	1	

DOCUMENT STATUS: Production | RELEASE DATE: 24-Apr-2026

TOOLED PART LIST

DESCRIPTION	MOLEX PART NUMBER	CODING COLOR	WEIGHT MEASURED	POTTING	
CMC HDR ASSY 32CKT	0643340100	BLACK	28.3g	NO	(F1)
	0643340110	BLACK	32.6g	YES	
	0643340300	BROWN		NO	
	0643340500	BLUE		NO	

THIS DRAWING CONTAINS INFORMATION THAT IS PROPRIETARY TO MOLEX ELECTRONIC TECHNOLOGIES, LLC AND SHOULD NOT BE USED WITHOUT WRITTEN PERMISSION

DIMENSION UNITS: MM | SCALE: 2:1

DRAFT WHERE APPLICABLE MUST REMAIN WITHIN DIMENSIONS

CURRENT REV DESC: UPDATE POTTING VOLUME

EC NO: CO-000039118
DRWN: Yu Dong Zhang 15-Apr-2026
CHK'D: Fan Bai 24-Apr-2026
APPR: Ringo Hu 24-Apr-2026
INITIAL REVISION:
DRWN: RFC_PLMIMP
APPR: Elvis Song 27-Mar-2026

THIRD ANGLE PROJECTION | DRAWING: A2-SIZE | SERIES: 64334

molex

CMC HEADER 32CKT POTTING
ASSEMBLED SOLDER VERSION

PRODUCT CUSTOMER DRAWING

DOCUMENT NUMBER	DOC TYPE	DOC PART	REVISION
SD-64334-100	PSD	005	F1

MATERIAL NUMBER	CUSTOMER	SHEET NUMBER
SEE TABLE	GENERAL MARKET	1 OF 2

FORMAT: mastersbyprodA2
REVISION: H
DATE: 2018/01/18

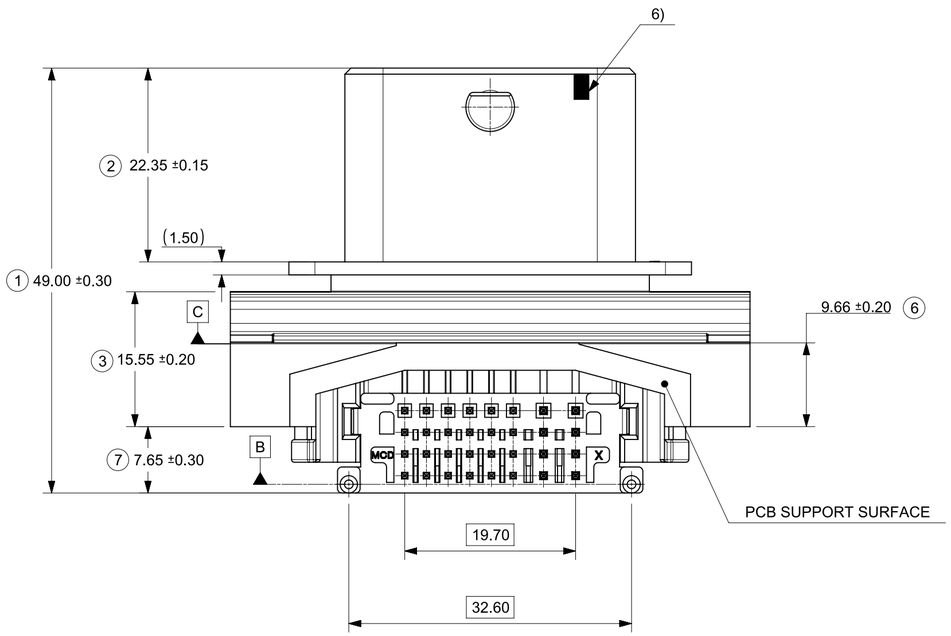

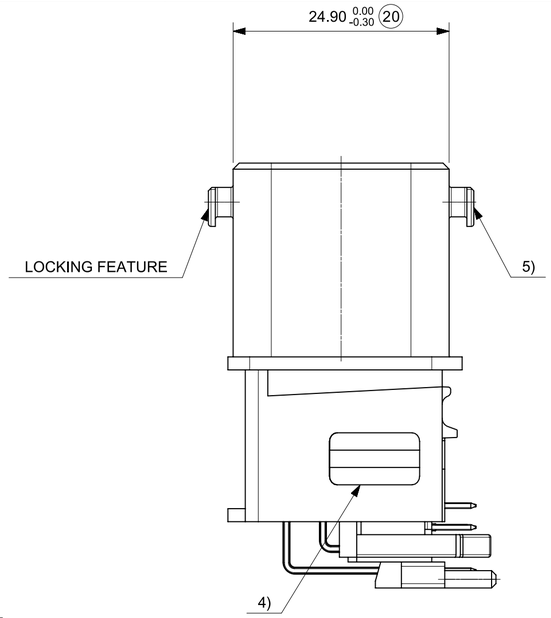

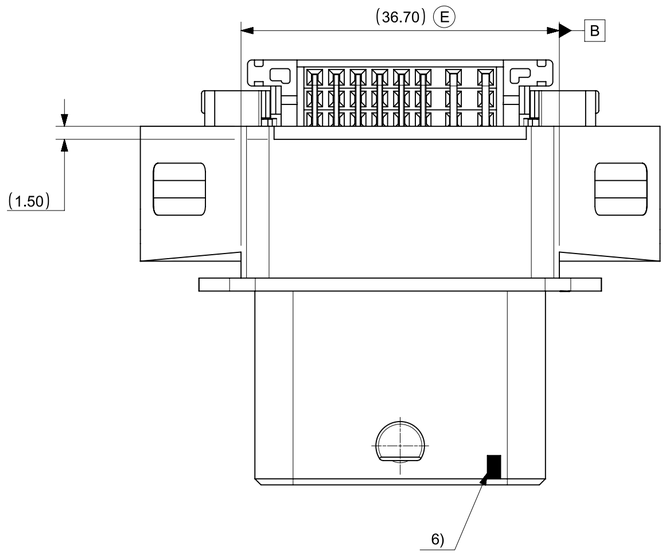

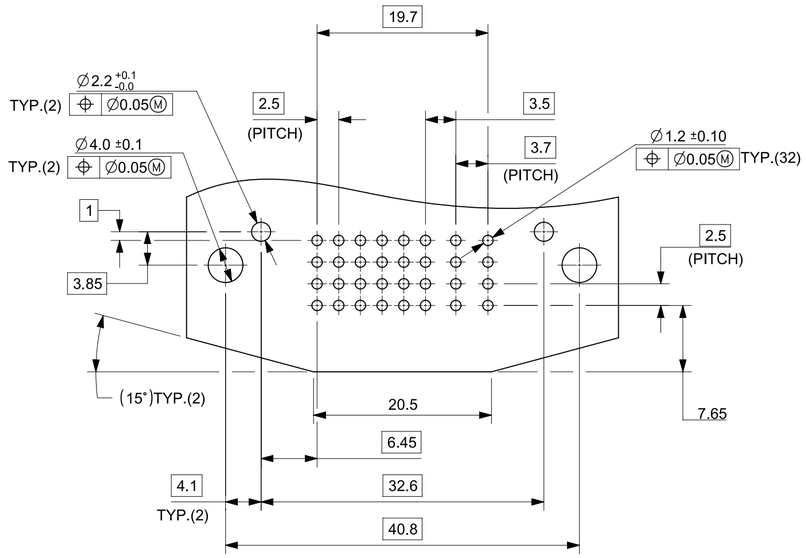

RECOMMENDED PCB LAYOUT (COMPONENT SIDE)
THICKNESS: 1.6±0.1mm

REVISION	EC#	DESCRIPTIONS
F1	39118	1.UPDATE POTTING THICKNESS. 2.UPDATE POTTING VOLUME.
F		1.ADD NEW POTTING PART NUMBER. 2.ADD POTTING THICKNESS. 3.ADD POTTING WEIGHT. 4.ADD GLUE TYPE.
E		1. REVISE PLASTIC & COPPER INFORMATION DESCRIPTION. 2. ADD PLATING THICKNESS. 3. ADD DIM TOLERANCE FOR CASING INTERFACING. 4. ADD PCB SIDE PIN POSITION. 5. REFER TO REVISION LETTER Ⓔ FOR DETAIL CHANGE.
D	629431	1. UPDATED VIEWS FROM PAP PRE-LOCK TO FINAL-LOCK 2. UPDATED DIM 12 FROM 4.65 TO 6.80 DUE TO GUIDE PLATE RELOCATION 3. CHANGED LETTERS FROM LOWER CASE TO CAPITAL 4. REMOVED BALLOON NUMBER FOR BASIC DIMENSIONS 5. ADDED INSPECTION BALLOON NUMBER LOG 6. UPDATED NOTES 6 FROM WHITE INK TO THERMAL RIBBON
C	619506	1) REMOVE PAGES OF INTERFACE DRAWING SD-98644-006 2) REMOVE QA COUNT FROM TITLE BLOCK 3) REMOVE GERMAN TEXT ON PAGES SHEET 1 4) UPDATE"NOTES" SEE REVISION SYMBOL C FOR DETAIL 5) ADD BLUE CODING "TOOLED PART LIST" TABLE SHEET2 6) ADD REVISION LOG
B1	GCA2011-0026	UPDATE TEST SPEC OF SOLDERABILITY
B	GCA2011-0001	UPDATE NEW REVISON INTERFACE DRAWING
A1	GCA2009-0059	1) ADD DIM 6, 7, 8 2) CORRECT HEADER WEIGHT 3) ADD PCB LAYOUT AND NOTES
A	610245	VOIDED BY ECTR MIGRATION TEAM DUE TO SHEET NUMBER CHANGED

MODIFICATION LOG

NOTES:

1. THE VIEW "RECOMMENDED PCB LAYOUT" SHOWS THE SECTION OF THE HOLE POSITION CONCERNING THE HEADER-PIN, GUIDING AND LOCKING LAYOUT.
2. THIS VIEW OF THE HOLE PATTERN DOESN'T POINT TO THE ABSOLUTE POSITION ON THE PCB.
3. THE HOLE PATTERN IS COPY OF THE HEADER LAYOUT.
4. PLEASE COMBINE THE TWO ELEMENTS (HEADER AND VIEW OF THE HOLE PATTERN) TO CREATE PCB LAYOUT.

THIS DRAWING CONTAINS INFORMATION THAT IS PROPRIETARY TO MOLEX ELECTRONIC TECHNOLOGIES, LLC AND SHOULD NOT BE USED WITHOUT WRITTEN PERMISSION

DIMENSION UNITS	SCALE	CURRENT REV DESC: UPDATE POTTING VOLUME
MM	2:1	

[redacted]

EC NO: CO-000039118
DRWN: Yu Dong Zhang 15-Apr-2026
CHK'D: Fan Bai 24-Apr-2026
APPR: Ringo Hu 24-Apr-2026
INITIAL REVISION:
DRWN: RFC_PLMIMP
APPR: Elvis Song 27-Mar-2026

molex

CMC HEADER 32CKT POTTING
ASSEMBLED SOLDER VERSION

PRODUCT CUSTOMER DRAWING

DOCUMENT NUMBER	DOC TYPE	DOC PART	REVISION
SD-64334-100	PSD	005	F1

DRAFT WHERE APPLICABLE MUST REMAIN WITHIN DIMENSIONS	THIRD ANGLE PROJECTION	DRAWING	SERIES	MATERIAL NUMBER	CUSTOMER	SHEET NUMBER
		A2-SIZE	64334	SEE TABLE	GENERAL MARKET	2 OF 2

DOCUMENT STATUS	Production	RELEASE DATE	24-Apr-2026