dsPIC33CK64MP105 FAMILY

16-Bit Digital Signal Controllers with High-Speed ADC, Op Amps, Comparators and High-Resolution PWM

Operating Conditions

- 3.0V to 3.6V: -40°C to +125°C, DC to 100 MHz

High-Performance 16-Bit DSP RISC CPU

- 16-Bit Wide Data Path
- Code Efficient (C and Assembly) Architecture
- 40-Bit Wide Accumulators
- Single-Cycle (MAC/MPY) with Dual Data Fetch
- Single-Cycle, Mixed-Sign Multiply:
  - 32-bit multiply support
- Fast 6-Cycle Divide
- Zero Overhead Looping

High-Speed PWM

- Four PWM Pairs
- Up to 250 ps PWM Resolution
- Dead Time for Rising and Falling Edges
- Dead-Time Compensation
- Clock Chopping for High-Frequency Operation
- PWM Support for:
  - DC/DC, AC/DC, inverters, PFC, lighting
  - BLDC, PMSM, ACIM, SRM motors
- Fault and Current Limit Inputs
- Flexible Trigger Configuration for ADC Triggering

High-Speed Analog-to-Digital Converter

- 12-Bit Resolution
- Two Dedicated SAR ADC Cores and One Shared SAR ADC Core
- Up to 3.5 Msps Conversion Rate per Core
- Dedicated Result Buffer for Each Analog Channel
- Flexible and Independent ADC Trigger Sources
- Four Digital Comparators
- Four Oversampling Filters

Microcontroller Features

- Small Pin Count Packages Ranging from 28 to 48 Pins, Including UQFN as Small as 4x4 mm
- High-Current I/O Sink/Source
- Edge or Level Change Notification Interrupt on I/O Pins
- Peripheral Pin Select (PPS) Remappable Pins
- Up to 64 Kbytes Flash Memory:
  - 10,000 erase/write cycle endurance
  - 20 years minimum data retention
  - Self-programmable under software control
  - Programmable code protection
  - Error Code Correction (ECC)
  - ICSP™ Write Inhibit
- Eight Kbytes SRAM Memory:
  - SRAM Memory Built-In Self-Test (MBIST)
- Multiple Interrupt Vectors with Individually Programmable Priority
- Four Sets of Interrupt Context Saving Registers which Include Accumulator and STATUS for Fast Interrupt Handling
- Four External Interrupt Pins
- Watchdog Timer (WDT)
- Windowed Deadman Timer (DMT)
- Fail-Safe Clock Monitor (FSCM) with Dedicated Oscillator for Backup
- Selectable Oscillator Options Including:
  - Low-Power 32 kHz RC (LPRC) Oscillator
  - High-precision, 8 MHz internal Fast RC (FRC) Oscillator
  - Primary high-speed, crystal/resonator oscillator or external clock
  - Primary PLL, which can be clocked from FRC or crystal oscillator
  - Secondary/Alternate PLL (APLL) for PWM and ADC
- Low-Power Management modes (Sleep and Idle)
- Power-on Reset and Brown-out Reset
- Programmable High/Low-Voltage Detect (HLVD)
- On-Board Capacitorless Regulator
- 256 Bytes of One-Time-Programmable (OTP) Memory

© 2018-2019 Microchip Technology Inc.

Peripheral Features

- Three 4-Wire SPI modules (up to 50 Mbps):
  - 16-byte FIFO
  - Variable width
  - I^2S mode
- Two I^2C Master and Slave w/Address Masking and IPMI Support
- Three Protocol UARTs with Automated Handling Support for:
  - LIN 2.2
  - DMX
  - Smart card (ISO 7816)
  - IrDA®
- Two SENT modules
- One Dedicated 16-Bit Timer/Counter
- Four Single Output Capture/Compare/PWM/Timer (SCCP) modules:
  - Flexible configuration as PWM, input capture, output compare or timers
  - Two 16-bit timers or one 32-bit timer in each module
  - PWM resolution down to 4 ns
  - Single PWM output
- One Multiple Output Capture/Compare/PWM/Timer (MCCP) module:
  - Flexible configuration as PWM, input capture, output compare or timers
  - Two 16-bit timers or one 32-bit timer in each module
  - PWM resolution down to 4 ns
  - Up to six PWM outputs
  - Programmable dead time
  - Auto-shutdown
- Two Quadrature Encoder Interfaces (QEI):
  - Four inputs: Phase A, Phase B, Home, Index
- Reference Clock Output (REFCLKO)
- Four Configurable Logic Cells (CLC) with Internal Connections to Select Peripherals and PPS
- 4-Channel Hardware DMA
- 32-Bit CRC Calculation module
- Peripheral Trigger Generator (PTG):
  - 16 possible trigger sources to other peripheral modules
  - CPU independent state machine-based instruction sequencer

Analog Features

- Three Fast Analog Comparators with Input Multiplexing
- Three Operational Amplifiers
- Three 12-Bit PDM DACs with Slope Compensation
- One Output DAC Buffer

Qualification and Class B Support

- AEC-Q100 REVG (Grade 1: -40°C to +125°C)
- Class B Safety Library, IEC 60730

Debug Features

- Three Programming and Debugging Interfaces:
  - 2-wire ICSP™ interface with non-intrusive access and real-time data exchange with application
- Three Complex, Five Simple Breakpoints
- IEEE Standard 1149.2 Compatible (JTAG) Boundary Scan

© 2018-2019 Microchip Technology Inc.

dsPIC33CK64MP105 PRODUCT FAMILIES

The device names, pin counts, memory sizes and peripheral availability of each device are listed in Table 1. The following pages show their pinout diagrams.

TABLE 1: dsPIC33CK64MP105 FAMILY

Product	Pins	Program Memory	Data Memory	General Purpose I/O/PPS	High-Speed PWM (Generators)	12-Bit ADC (External Channels)	Remappable Peripherals						Op Amplifiers	Comparators	12-Bit DACs	I^2C	QEI	SENT	32-Bit CRC	DMA (Channels)	Packages
							Dedicated 16-Bit Timers	UARTs	MCCP(1)	SCCP(2)	CLC	SPI/I^2S									
dsPIC33CK32MP102	28	32K	8K	21/16	4	12	1	3	1	4	4	3	2	3	3	2	2	2	1	4	SSOP/UQFN
dsPIC33CK32MP103	36	32K	8K	27/22	4	16	1	3	1	4	4	3	3	3	3	2	2	2	1	4	UQFN
dsPIC33CK32MP105	48	32K	8K	39/34	4	19	1	3	1	4	4	3	3	3	3	2	2	2	1	4	UQFN/TQFP
dsPIC33CK64MP102	28	64K	8K	21/16	4	12	1	3	1	4	4	3	2	3	3	2	2	2	1	4	SSOP/UQFN
dsPIC33CK64MP103	36	64K	8K	27/22	4	16	1	3	1	4	4	3	3	3	3	2	2	2	1	4	UQFN
dsPIC33CK64MP105	48	64K	8K	39/34	4	19	1	3	1	4	4	3	3	3	3	2	2	2	1	4	UQFN/TQFP

Note 1: MCCP can be configured as a PWM with up to six outputs, input capture, output compare, 2 x 16-bit timers or 1 x 32-bit timer.

2: SCCP can be configured as a PWM with one output, input capture, output compare, 2 x 16-bit timers or 1 x 32-bit timer.

© 2018-2019 Microchip Technology Inc.

Pin Diagrams

28-Pin SSOP(1)

■ = 5V Tolerant

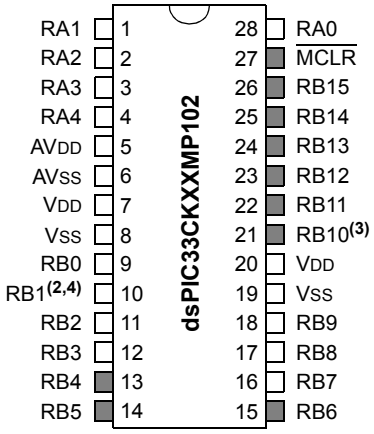

Note 1: See Table 2 for a complete description of pin functions.
2: Pin has an increased current drive strength. Refer to **Section 31.0 "Electrical Characteristics"** for details.
3: A pull-up resistor is connected to this pin during programming or when JTAG is enabled in the Configuration bits.
4: This pin is toggled during programming.

TABLE 2: 28-PIN SSOP COMPLETE PIN FUNCTION DESCRIPTIONS

Pin #	Function(1)	Pin #	Function(1)
1	OA1IN-/ANA1/RA1	15	PGC3/**RP38**/SCL2/RB6
2	OA1IN+/AN9/RA2	16	TDO/AN2/CMP3A/**RP39**/RB7
3	DACOUT/AN3/CMP1C/RA3	17	PGD1/AN10/**RP40**/SCL1/RB8
4	AN4/CMP3B/IBIAS3/RA4	18	PGC1/AN11/**RP41**/SDA1/RB9
5	AVDD	19	VSS
6	AVSS	20	VDD
7	VDD	21	TMS/**RP42**/PWM3H/RB10(3)
8	VSS	22	TCK/**RP43**/PWM3L/RB11
9	OSCI/CLKI/AN5/**RP32**/RB0	23	TDI/**RP44**/PWM2H/RB12
10	OSCO/CLKO/AN6/**RP33**/RB1(2,4)	24	**RP45**/PWM2L/RB13
11	OA2OUT/AN1/AN7/ANA0/CMP1D/CMP2A/CMP3D/**RP34**/INT0/RB2	25	**RP46**/PWM1H/RB14
12	PGD2/OA2IN-/AN8/**RP35**/RB3	26	**RP47**/PWM1L/RB15
13	PGC2/OA2IN+/**RP36**/RB4	27	MCLR
14	PGD3/**RP37**/SDA2/RB5	28	OA1OUT/AN0/CMP1A/IBIAS0/RA0

Note 1: **RPn** represents remappable peripheral functions.
2: Pin has an increased current drive strength. Refer to **Section 31.0 "Electrical Characteristics"** for details.
3: A pull-up resistor is connected to this pin during programming or when JTAG is enabled in the Configuration bits.
4: This pin is toggled during programming.

© 2018-2019 Microchip Technology Inc.

Pin Diagrams (Continued)

28-Pin UQFN(1)

= 5V Tolerant

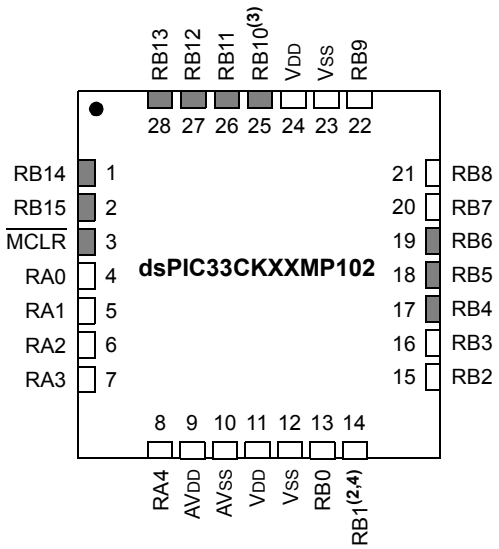

Note 1: See Table 3 for a complete description of pin functions.
2: Pin has an increased current drive strength. Refer to **Section 31.0 "Electrical Characteristics"** for details.
3: A pull-up resistor is connected to this pin during programming or when JTAG is enabled in the Configuration bits.
4: This pin is toggled during programming.

TABLE 3: 28-PIN UQFN COMPLETE PIN FUNCTION DESCRIPTIONS

Pin #	Function(1)	Pin #	Function(1)
1	**RP46**/PWM1H/RB14	15	OA2OUT/AN1/AN7/ANA0/CMP1D/CMP2D/CMP3D/**RP34**/INT0/RB2
2	**RP47**/PWM1L/RB15	16	PGD2/OA2IN-/AN8/**RP35**/RB3
3	$\overline{\text{MCLR}}$	17	PGC2/OA2IN+/**RP36**/RB4
4	OA1OUT/AN0/CMP1A/IBIAS0/RA0	18	PGD3/**RP37**/SDA2/RB5
5	OA1IN-/ANA1/RA1	19	PGC3/**RP38**/SCL2/RB6
6	OA1IN+/AN9/RA2	20	TDO/AN2/CMP3A/**RP39**/RB7
7	DACOUT/AN3/CMP1C/RA3	21	PGD1/AN10/**RP40**/SCL1/RB8
8	AN4/CMP3B/IBIAS3/RA4	22	PGC1/AN11/**RP41**/SDA1/RB9
9	AVDD	23	VSS
10	AVSS	24	VDD
11	VDD	25	TMS/**RP42**/PWM3H/RB10(3)
12	VSS	26	TCK/**RP43**/PWM3L/RB11
13	OSCI/CLKI/AN5/**RP32**/RB0	27	TDI/**RP44**/PWM2H/RB12
14	OSCO/CLKO/AN6/**RP33**/RB1(2,4)	28	**RP45**/PWM2L/RB13

Note 1: **RPn** represents remappable peripheral functions.
2: Pin has an increased current drive strength. Refer to **Section 31.0 "Electrical Characteristics"** for details.
3: A pull-up resistor is connected to this pin during programming or when JTAG is enabled in the Configuration bits.
4: This pin is toggled during programming.

Pin Diagrams (Continued)

36-Pin UQFN(1)

= 5V Tolerant

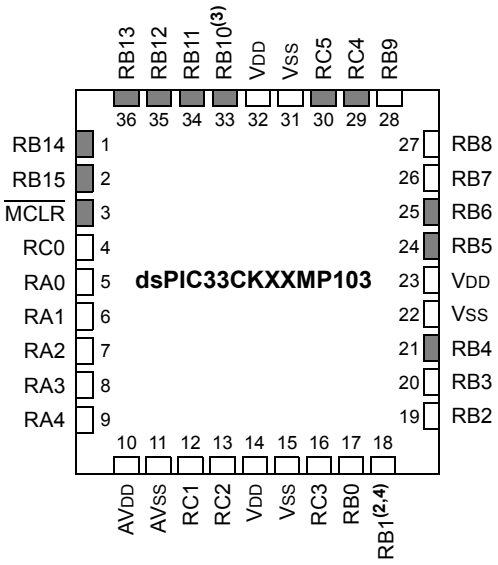

Note 1: See Table 4 for a complete description of pin functions.
2: Pin has an increased current drive strength. Refer to **Section 31.0 "Electrical Characteristics"** for details.
3: A pull-up resistor is connected to this pin during programming or when JTAG is enabled in the Configuration bits.
4: This pin is toggled during programming.

TABLE 4: 36-PIN UQFN COMPLETE PIN FUNCTION DESCRIPTIONS

Pin #	Function(1)	Pin #	Function(1)
1	**RP46**/PWM1H/RB14	19	OA2OUT/AN1/AN7/ANA0/CMP1D/CMP2D/CMP3D/**RP34**/INT0/RB2
2	**RP47**/PWM1L/RB15	20	PGD2/OA2IN-/AN8/**RP35**/RB3
3	$\overline{\text{MCLR}}$	21	PGC2/OA2IN+/**RP36**/RB4
4	AN12/ANN0/**RP48**/RC0	22	VSS
5	OA1OUT/AN0/CMP1A/IBIAS0/RA0	23	VDD
6	OA1IN-/ANA1/RA1	24	PGD3/**RP37**/SDA2/RB5
7	OA1IN+/AN9/RA2	25	PGC3/**RP38**/SCL2/RB6
8	DACOUT/AN3/CMP1C/RA3	26	TDO/AN2/CMP3A/**RP39**/RB7
9	OA3OUT/AN4/CMP3B/IBIAS3/RA4	27	PGD1/AN10/**RP40**/SCL1/RB8
10	AVDD	28	PGC1/AN11/**RP41**/SDA1/RB9
11	AVSS	29	**RP52**/ASDA2/RC4
12	OA3IN-/AN13/CMP1B/ISRC0/**RP49**/RC1	30	**RP53**/ASCL2/RC5
13	OA3IN+/AN14/CMP2B/ISRC1/**RP50**/RC2	31	VSS
14	VDD	32	VDD
15	VSS	33	TMS/**RP42**/PWM3H/RB10(3)
16	AN15/CMP2A/IBIAS2/**RP51**/RC3	34	TCK/**RP43**/PWM3L/RB11
17	OSCI/CLKI/AN5/**RP32**/RB0	35	TDI/**RP44**/PWM2H/RB12
18	OSCO/CLKO/AN6/**RP33**/RB1(2,4)	36	**RP45**/PWM2L/RB13

Note 1: **RPn** represents remappable peripheral functions.
2: Pin has an increased current drive strength. Refer to **Section 31.0 "Electrical Characteristics"** for details.
3: A pull-up resistor is connected to this pin during programming or when JTAG is enabled in the Configuration bits.
4: This pin is toggled during programming.

© 2018-2019 Microchip Technology Inc.

Pin Diagrams (Continued)

48-Pin TQFP, UQFN(1)

= 5V Tolerant

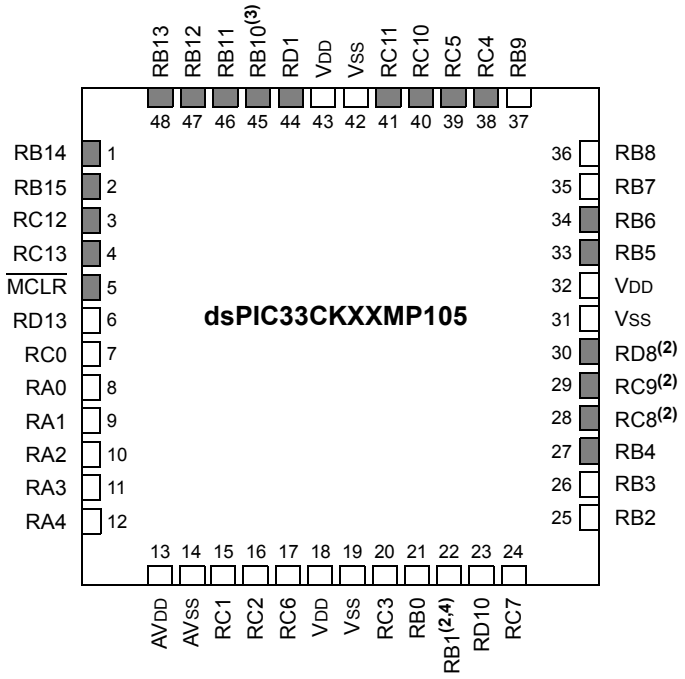

Note 1: See Table 5 for a complete description of pin functions.
2: Pin has an increased current drive strength. Refer to **Section 31.0 "Electrical Characteristics"** for details.
3: A pull-up resistor is connected to this pin during programming or when JTAG is enabled in the Configuration bits.
4: This pin is toggled during programming.

TABLE 5: 48-PIN TQFP, UQFN COMPLETE PIN FUNCTION DESCRIPTIONS

Pin #	Function(1)	Pin #	Function(1)
1	**RP46**/PWM1H/RB14	25	OA2OUT/AN1/AN7/ANA0/CMP1D/CMP2D/CMP3D/**RP34**/INT0/RB2
2	**RP47**/PWM1L/RB15	26	PGD2/OA2IN-/AN8/**RP35**/RB3
3	**RP60**/RC12	27	PGC2/OA2IN+/**RP36**/RB4
4	**RP61**/RC13	28	**RP56**/ASDA1/SCK2/RC8(2)
5	$\overline{\text{MCLR}}$	29	**RP57**/ASCL1/SDI2/RC9(2)
6	ANN2/**RP77**/RD13	30	**RP72**/SDO2/PCI19/RD8(2)
7	AN12/ANN0/**RP48**/RC0	31	VSS
8	OA1OUT/AN0/CMP1A/IBIAS0/RA0	32	VDD
9	OA1IN-/ANA1/RA1	33	PGD3/**RP37**/SDA2/RB5
10	OA1IN+/AN9/RA2	34	PGC3/**RP38**/SCL2/RB6
11	DACOUT/AN3/CMP1C/RA3	35	TDO/AN2/CMP3A/**RP39**/RB7
12	OA3OUT/AN4/CMP3B/IBIAS3/RA4	36	PGD1/AN10/**RP40**/SCL1/RB8
13	AVDD	37	PGC1/AN11/**RP41**/SDA1/RB9
14	AVSS	38	**RP52**/ASDA2/RC4
15	OA3IN-/AN13/CMP1B/ISRC0/**RP49**/RC1	39	**RP53**/ASCL2/RC5
16	OA3IN+/AN14/CMP2B/ISRC1/**RP50**/RC2	40	**RP58**/RC10
17	AN17/ANN1/IBIAS1/**RP54**/RC6	41	**RP59**/RC11
18	VDD	42	VSS
19	VSS	43	VDD
20	AN15/CMP2A/IBIAS2/**RP51**/RC3	44	**RP65**/PWM4H/RD1
21	OSCI/CLKI/AN5/**RP32**/RB0	45	TMS/**RP42**/PWM3H/RB10(3)
22	OSCO/CLKO/AN6/**RP33**/RB1(2,4)	46	TCK/**RP43**/PWM3L/RB11
23	AN18/CMP3C/ISRC3/**RP74**/RD10	47	TDI/**RP44**/PWM2H/RB12
24	AN16/ISRC2/**RP55**/RC7	48	**RP45**/PWM2L/RB13

Note 1: **RPn** represents remappable peripheral functions.
2: Pin has an increased current drive strength. Refer to **Section 31.0 "Electrical Characteristics"** for details.
3: A pull-up resistor is connected to this pin during programming or when JTAG is enabled in the Configuration bits.
4: This pin is toggled during programming.

© 2018-2019 Microchip Technology Inc.

Table of Contents

1.0 Device Overview ... 13
2.0 Guidelines for Getting Started with 16-Bit Digital Signal Controllers ... 17
3.0 CPU ... 23
4.0 Memory Organization ... 33
5.0 Flash Program Memory ... 63
6.0 Resets ... 77
7.0 Interrupt Controller ... 81
8.0 I/O Ports ... 101
9.0 Oscillator with High-Frequency PLL ... 155
10.0 Direct Memory Access (DMA) Controller ... 179
11.0 High-Resolution PWM with Fine Edge Placement ... 189
12.0 High-Speed, 12-Bit Analog-to-Digital Converter (ADC) ... 223
13.0 High-Speed Analog Comparator with Slope Compensation DAC ... 253
14.0 Quadrature Encoder Interface (QEI) ... 265
15.0 Universal Asynchronous Receiver Transmitter (UART) ... 285
16.0 Serial Peripheral Interface (SPI) ... 307
17.0 Inter-Integrated Circuit (I^2C) ... 325
18.0 Single-Edge Nibble Transmission (SENT) ... 335
19.0 Timer1 ... 345
20.0 Capture/Compare/PWM/Timer Modules (SCCP/MCCP) ... 349
21.0 Configurable Logic Cell (CLC) ... 365
22.0 Peripheral Trigger Generator (PTG) ... 377
23.0 Current Bias Generator (CBG) ... 393
24.0 Operational Amplifier ... 397
25.0 Deadman Timer (DMT) ... 401
26.0 32-Bit Programmable Cyclic Redundancy Check (CRC) Generator ... 409
27.0 Power-Saving Features ... 413
28.0 Special Features ... 425
29.0 Instruction Set Summary ... 451
30.0 Development Support ... 461
31.0 Electrical Characteristics ... 465
32.0 Packaging Information ... 495
Appendix A: Revision History ... 515
Index ... 517
The Microchip Website ... 525
Customer Change Notification Service ... 525
Customer Support ... 525
Product Identification System ... 527

TO OUR VALUED CUSTOMERS

It is our intention to provide our valued customers with the best documentation possible to ensure successful use of your Microchip products. To this end, we will continue to improve our publications to better suit your needs. Our publications will be refined and enhanced as new volumes and updates are introduced.

If you have any questions or comments regarding this publication, please contact the Marketing Communications Department via E-mail at **docerrors@microchip.com**. We welcome your feedback.

Most Current Data Sheet

To obtain the most up-to-date version of this data sheet, please register at our Worldwide Website at:

http://www.microchip.com

You can determine the version of a data sheet by examining its literature number found on the bottom outside corner of any page. The last character of the literature number is the version number, (e.g., DS30000000A is version A of document DS30000000).

Errata

An errata sheet, describing minor operational differences from the data sheet and recommended workarounds, may exist for current devices. As device/documentation issues become known to us, we will publish an errata sheet. The errata will specify the revision of silicon and revision of document to which it applies.

To determine if an errata sheet exists for a particular device, please check with one of the following:

- Microchip's Worldwide Website; **http://www.microchip.com**
- Your local Microchip sales office (see last page)

When contacting a sales office, please specify which device, revision of silicon and data sheet (include literature number) you are using.

Customer Notification System

Register on our website at **www.microchip.com** to receive the most current information on all of our products.

© 2018-2019 Microchip Technology Inc.

Referenced Sources

This device data sheet is based on the following individual chapters of the *"dsPIC33/PIC24 Family Reference Manual"*. These documents should be considered as the general reference for the operation of a particular module or device feature.

Note: To access the documents listed below, browse to the documentation section of the dsPIC33CK64MP105 product page of the Microchip website (www.microchip.com) or select a family reference manual section from the following list.

In addition to parameters, features and other documentation, the resulting page provides links to the related family reference manual sections.

- **"Introduction"** (www.microchip.com/DS70573)
- **"Enhanced CPU"** (www.microchip.com/DS70005158)
- **"Data Memory"** (www.microchip.com/DS70595)
- **"dsPIC33E/PIC24E Program Memory"** (www.microchip.com/DS70000613)
- **"Reset"** (www.microchip.com/DS70602)
- **"Interrupts"** (www.microchip.com/DS70000600)
- **"I/O Ports with Edge Detect"** (www.microchip.com/DS70005322)
- **"Oscillator Module with High-Speed PLL"** (www.microchip.com/DS70005255)
- **"Direct Memory Access Controller (DMA)"** (www.microchip.com/DS30009742)
- **"High-Resolution PWM with Fine Edge Placement"** (www.microchip.com/DS70005320)
- **"12-Bit High-Speed, Multiple SARs A/D Converter (ADC)"** (www.microchip.com/DS70005213)
- **"High-Speed Analog Comparator Module"** (www.microchip.com/DS70005280)
- **"Quadrature Encoder Interface (QEI)"** (www.microchip.com/DS70000601)
- **"Multiprotocol Universal Asynchronous Receiver Transmitter (UART) Module"** (www.microchip.com/DS70005288)
- **"Serial Peripheral Interface (SPI) with Audio Codec Support"** (www.microchip.com/DS70005136)
- **"Inter-Integrated Circuit (I^2C)"** (www.microchip.com/DS70000195)
- **"Single-Edge Nibble Transmission (SENT) Module"** (www.microchip.com/DS70005145)
- **"Timer1 Module"** (www.microchip.com/DS70005279)
- **"Capture/Compare/PWM/Timer (MCCP and SCCP)"** (www.microchip.com/DS30003035)
- **"Configurable Logic Cell (CLC)"** (www.microchip.com/DS70005298)
- **"Peripheral Trigger Generator (PTG)"** (www.microchip.com/DS70000669)
- **"Current Bias Generator (CBG)"** (www.microchip.com/DS70005253)
- **"Deadman Timer (DMT)"** (www.microchip.com/DS70005155)
- **"32-Bit Programmable Cyclic Redundancy Check (CRC)"** (www.microchip.com/DS30009729)
- **"Dual Watchdog Timer"** (www.microchip.com/DS70005250)
- **"Programming and Diagnostics"** (www.microchip.com/DS70608)
- **"CodeGuard™ Security"** (www.microchip.com/DS70634)
- **"Flash Programming"** (www.microchip.com/DS70000609)

NOTES:

© 2018-2019 Microchip Technology Inc.

1.0 DEVICE OVERVIEW

Note 1: This data sheet summarizes the features of the dsPIC33CK64MP105 family of devices. It is not intended to be a comprehensive resource. To complement the information in this data sheet, refer to the related section of the *"dsPIC33/PIC24 Family Reference Manual"*, which is available from the Microchip website (www.microchip.com).

2: Some registers and associated bits described in this section may not be available on all devices. Refer to **Section 4.0 "Memory Organization"** in this data sheet for device-specific register and bit information.

This document contains device-specific information for the dsPIC33CK64MP105 Digital Signal Controller (DSC) and Microcontroller (MCU) devices.

dsPIC33CK64MP105 devices contain extensive Digital Signal Processor (DSP) functionality with a high-performance, 16-bit MCU architecture.

Figure 1-1 shows a general block diagram of the core and peripheral modules of the dsPIC33CK64MP105 family. Table 1-1 lists the functions of the various pins shown in the pinout diagrams.

FIGURE 1-1: dsPIC33CK64MP105 FAMILY BLOCK DIAGRAM(1)

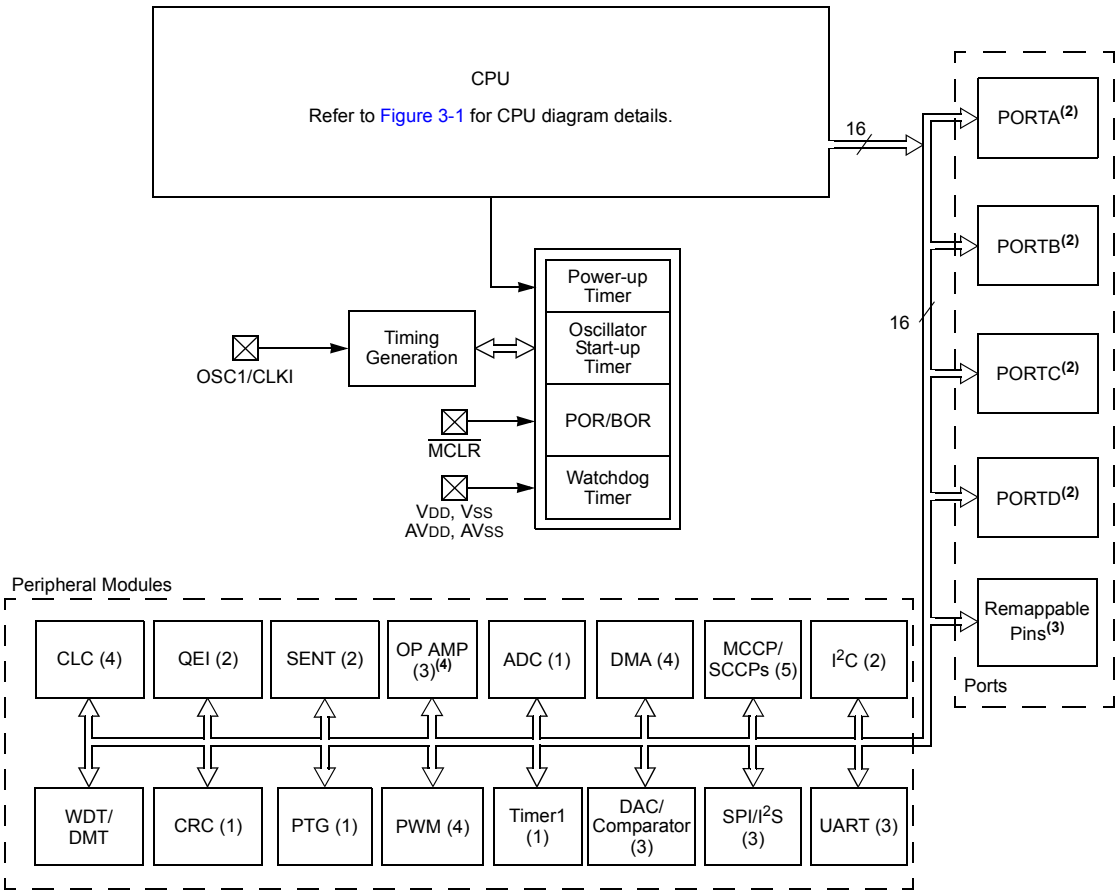

Note 1: The numbers in the parentheses are the number of instantiations of the module indicated.

2: Not all I/O pins or features are implemented on all device pinout configurations.

3: Some peripheral I/Os are only accessible through Peripheral Pin Select (PPS).

4: 28-lead devices have only two op amp instances.

TABLE 1-1: PINOUT I/O DESCRIPTIONS

Pin Name(1)	Pin Type	Buffer Type	PPS	Description
AN0-AN18	I	Analog	No	Analog input channels.
ANA0-ANA1	I	Analog	No	Analog alternate inputs.
ANN0-ANN1	I	Analog	No	Analog negative inputs.
CLKI	I	ST	No	External Clock (EC) source input. Always associated with OSCI pin function.
CLKO	O	—	No	In Configuration bits, it can be set to output the CPU clock. Always associated with OSCO pin function.
OSCI	I	CMOS	No	Oscillator crystal input. Connects to crystal or resonator in Crystal Oscillator mode.
OSCO	I/O	—	No	Oscillator crystal output. Connects to crystal or resonator in Crystal Oscillator mode.
REFCLKI	I	ST	Yes	Reference clock input.
REFCLKO	O	—	Yes	Reference clock output.
INT0	I	ST	No	External Interrupt 0.
INT1	I	ST	Yes	External Interrupt 1.
INT2	I	ST	Yes	External Interrupt 2.
INT3	I	ST	Yes	External Interrupt 3.
IOCA[4:0]	I	ST	No	Interrupt-on-Change input for PORTA.
IOCB[15:0]	I	ST	No	Interrupt-on-Change input for PORTB.
IOCC[13:0]	I	ST	No	Interrupt-on-Change input for PORTC.
IOCD1, IOCD8, IOCD10, IOCD13	I	ST	No	Interrupt-on-Change input for PORTD.
QEIAx	I	ST	Yes	QEIx Input A.
QEIBx	I	ST	Yes	QEIx Input B.
QEINDXx	I	ST	Yes	QEIx Index input.
QEIHOMx	I	ST	Yes	QEIx Home input.
QEICMPx	O	—	Yes	QEIx comparator output.
RP32-RP61, RP65, RP72, RP74, RP77	I/O	ST	Yes	Remappable I/O ports.
RA0-RA4	I/O	ST	No	PORTA is a bidirectional I/O port.
RB0-RB15	I/O	ST	No	PORTB is a bidirectional I/O port.
RC0-RC13	I/O	ST	No	PORTC is a bidirectional I/O port.
RD1, RD8, RD10, RD13	I/O	ST	No	PORTD is a bidirectional I/O port.
T1CK	I	ST	Yes	Timer1 external clock input.
$\overline{\text{U1CTS}}$	I	ST	Yes	UART1 Clear-to-Send.
$\overline{\text{U1RTS}}$	O	—	Yes	UART1 Request-to-Send.
U1RX	I	ST	Yes	UART1 receive.
U1TX	O	—	Yes	UART1 transmit.
$\overline{\text{U1DSR}}$	I	ST	Yes	UART1 Data-Set-Ready.
$\overline{\text{U1DTR}}$	O	—	Yes	UART1 Data-Terminal-Ready.

Legend: CMOS = CMOS compatible input or output; Analog = Analog input; P = Power; ST = Schmitt Trigger input with CMOS levels; O = Output; I = Input; PPS = Peripheral Pin Select

Note 1: Not all pins are available in all package variants. See the **"Pin Diagrams"** section for pin availability.

2: PWM4L and PWM4H pins are available on PPS.

3: SPI2 supports dedicated pins as well as PPS on 48-pin devices.

© 2018-2019 Microchip Technology Inc.

TABLE 1-1: PINOUT I/O DESCRIPTIONS (CONTINUED)

Pin Name[1]	Pin Type	Buffer Type	PPS	Description
U2CTS	I	ST	Yes	UART2 Clear-to-Send.
U2RTS	O	—	Yes	UART2 Request-to-Send.
U2RX	I	ST	Yes	UART2 receive.
U2TX	O	—	Yes	UART2 transmit.
U2DSR	I	ST	Yes	UART2 Data-Set-Ready.
U2DTR	O	—	Yes	UART2 Data-Terminal-Ready.
U3CTS	I	ST	Yes	UART3 Clear-to-Send.
U3RTS	O	—	Yes	UART3 Request-to-Send.
U3RX	I	ST	Yes	UART3 receive.
U3TX	O	—	Yes	UART3 transmit.
U3DSR	I	ST	Yes	UART3 Data-Set-Ready.
U3DTR	O	—	Yes	UART3 Data-Terminal-Ready.
SENT1	I	ST	Yes	SENT1 input.
SENT1OUT	O	—	Yes	SENT1 output.
SENT2	I	ST	Yes	SENT2 input.
SENT2OUT	O	—	Yes	SENT2 output.
PTGTRG24	O	—	Yes	PTG Trigger Output 24.
PTGTRG25	O	—	Yes	PTG Trigger Output 25.
TCKI1-TCKI5	I	ST	Yes	MCCP/SCCP timer inputs.
ICM1-ICM5	I	ST	Yes	MCCP/SCCP capture inputs.
OCFA-OCFB	I	ST	Yes	MCCP/SCCP Fault inputs.
OCM1x-OCM5x	O	—	Yes	MCCP/SCCP compare outputs.
SCK1	I/O	ST	Yes	Synchronous serial clock input/output for SPI1.
SDI1	I	ST	Yes	SPI1 data in.
SDO1	O	—	Yes	SPI1 data out.
SS1	I/O	ST	Yes	SPI1 slave synchronization or frame pulse I/O.
SCK2	I/O	ST	Yes[3]	Synchronous serial clock input/output for SPI2.
SDI2	I	ST	Yes[3]	SPI2 data in.
SDO2	O	—	Yes[3]	SPI2 data out.
SS2	I/O	ST	Yes[3]	SPI2 slave synchronization or frame pulse I/O.
SCK3	I/O	ST	Yes	Synchronous serial clock input/output for SPI3.
SDI3	I	ST	Yes	SPI3 data in.
SDO3	O	—	Yes	SPI3 data out.
SS3	I/O	ST	Yes	SPI3 slave synchronization or frame pulse I/O.
SCL1	I/O	ST	No	Synchronous serial clock input/output for I2C1.
SDA1	I/O	ST	No	Synchronous serial data input/output for I2C1.
ASCL1	I/O	ST	No	Alternate synchronous serial clock input/output for I2C1.
ASDA1	I/O	ST	No	Alternate synchronous serial data input/output for I2C1.
SCL2	I/O	ST	No	Synchronous serial clock input/output for I2C2.
SDA2	I/O	ST	No	Synchronous serial data input/output for I2C2.
ASCL2	I/O	ST	No	Alternate synchronous serial clock input/output for I2C2.
ASDA2	I/O	ST	No	Alternate synchronous serial data input/output for I2C2.

Legend: CMOS = CMOS compatible input or output; Analog = Analog input; P = Power; ST = Schmitt Trigger input with CMOS levels; O = Output; I = Input; PPS = Peripheral Pin Select

Note 1: Not all pins are available in all package variants. See the **"Pin Diagrams"** section for pin availability.

2: PWM4L and PWM4H pins are available on PPS.

3: SPI2 supports dedicated pins as well as PPS on 48-pin devices.

TABLE 1-1: PINOUT I/O DESCRIPTIONS (CONTINUED)

Pin Name(1)	Pin Type	Buffer Type	PPS	Description
TMS	I	ST	No	JTAG Test mode select pin.
TCK	I	ST	No	JTAG test clock input pin.
TDI	I	ST	No	JTAG test data input pin.
TDO	O	—	No	JTAG test data output pin.
PCI8-PCI18	I	ST	Yes	PWM Inputs 8 through 18.
PCI19	I	ST	No	PWM Input 19.
PWMEA-PWMED	O	—	Yes	PWM Event Outputs A through D.
PWM1L-PWM4L(2)	O	—	No	PWM Low Outputs 1 through 4.
PWM1H-PWM4H(2)	O	—	No	PWM High Outputs 1 through 4.
CLCINA-CLCIND	I	ST	Yes	CLC Inputs A through D.
CLCxOUT	O	—	Yes	CLCx output.
CMP1A-CMP3A	I	Analog	No	Comparator Channels 1A through 3A inputs.
CMP1B-CMP3B	I	Analog	No	Comparator Channels 1B through 3B inputs.
CMP1C-CMP3C	I	Analog	No	Comparator Channels 1C through 3C inputs.
CMP1D-CMP3D	I	Analog	No	Comparator Channels 1D through 3D inputs.
DACOUT	O	—	No	DAC output voltage.
IBIAS0-IBIAS3	O	Analog	No	50 µA Constant-Current Outputs 0 through 3.
ISRC0-ISRC3	O	Analog	No	10 µA Constant-Current Outputs 0 through 3.
OA1IN+	I	—	No	Op Amp 1+ input.
OA1IN-	I	—	No	Op Amp 1- input.
OA1OUT	O	—	No	Op Amp 1 output.
OA2IN+	I	—	No	Op Amp 2+ input.
OA2IN-	I	—	No	Op Amp 2- input.
OA2OUT	O	—	No	Op Amp 2 output.
OA3IN+	I	—	No	Op Amp 3+ input.
OA3IN-	I	—	No	Op Amp 3- input.
OA3OUT	O	—	No	Op Amp 3 output.
ADTRG31	I	ST	No	External ADC trigger source.
PGD1	I/O	ST	No	Data I/O pin for Programming/Debugging Communication Channel 1.
PGC1	I	ST	No	Clock input pin for Programming/Debugging Communication Channel 1.
PGD2	I/O	ST	No	Data I/O pin for Programming/Debugging Communication Channel 2.
PGC2	I	ST	No	Clock input pin for Programming/Debugging Communication Channel 2.
PGD3	I/O	ST	No	Data I/O pin for Programming/Debugging Communication Channel 3.
PGC3	I	ST	No	Clock input pin for Programming/Debugging Communication Channel 3.
$\overline{MCLR}$	I/P	ST	No	Master Clear (Reset) input. This pin is an active-low Reset to the device.
AVDD	P	P	No	Positive supply for analog modules. This pin must be connected at all times.
AVSS	P	P	No	Ground reference for analog modules. This pin must be connected at all times.
VDD	P	P	No	Positive supply for peripheral logic and I/O pins.
VSS	P	P	No	Ground reference for logic and I/O pins.

Legend: CMOS = CMOS compatible input or output; Analog = Analog input; P = Power; ST = Schmitt Trigger input with CMOS levels; O = Output; I = Input; PPS = Peripheral Pin Select

Note 1: Not all pins are available in all package variants. See the **"Pin Diagrams"** section for pin availability.

2: PWM4L and PWM4H pins are available on PPS.

3: SPI2 supports dedicated pins as well as PPS on 48-pin devices.

© 2018-2019 Microchip Technology Inc.

2.0 GUIDELINES FOR GETTING STARTED WITH 16-BIT DIGITAL SIGNAL CONTROLLERS

2.1 Basic Connection Requirements

Getting started with the dsPIC33CK64MP105 family devices requires attention to a minimal set of device pin connections before proceeding with development. The following is a list of pin names which must always be connected:

- All VDD and VSS pins
  (see **Section 2.2 "Decoupling Capacitors"**)
- All AVDD and AVSS pins
  regardless if ADC module is not used (see **Section 2.2 "Decoupling Capacitors"**)
- $\overline{\text{MCLR}}$ pin
  (see **Section 2.3 "Master Clear (MCLR) Pin"**)
- PGCx/PGDx pins
  used for In-Circuit Serial Programming™ (ICSP™) and debugging purposes (see **Section 2.4 "ICSP Pins"**)
- OSCI and OSCO pins
  when an external oscillator source is used (see **Section 2.5 "External Oscillator Pins"**)

2.2 Decoupling Capacitors

The use of decoupling capacitors on every pair of power supply pins, such as VDD, VSS, AVDD and AVSS is required.

Consider the following criteria when using decoupling capacitors:

- **Value and type of capacitor:** Recommendation of 0.1 µF (100 nF), 10-20V. This capacitor should be a low-ESR and have resonance frequency in the range of 20 MHz and higher. It is recommended to use ceramic capacitors.
- **Placement on the printed circuit board:** The decoupling capacitors should be placed as close to the pins as possible. It is recommended to place the capacitors on the same side of the board as the device. If space is constricted, the capacitor can be placed on another layer on the PCB using a via; however, ensure that the trace length from the pin to the capacitor is within one-quarter inch (6 mm) in length.
- **Handling high-frequency noise:** If the board is experiencing high-frequency noise, above tens of MHz, add a second ceramic-type capacitor in parallel to the above described decoupling capacitor. The value of the second capacitor can be in the range of 0.01 µF to 0.001 µF. Place this second capacitor next to the primary decoupling capacitor. In high-speed circuit designs, consider implementing a decade pair of capacitances as close to the power and ground pins as possible. For example, 0.1 µF in parallel with 0.001 µF.
- **Maximizing performance:** On the board layout from the power supply circuit, run the power and return traces to the decoupling capacitors first, and then to the device pins. This ensures that the decoupling capacitors are first in the power chain. Equally important is to keep the trace length between the capacitor and the power pins to a minimum, thereby reducing PCB track inductance.

© 2018-2019 Microchip Technology Inc.

FIGURE 2-1: RECOMMENDED MINIMUM CONNECTION

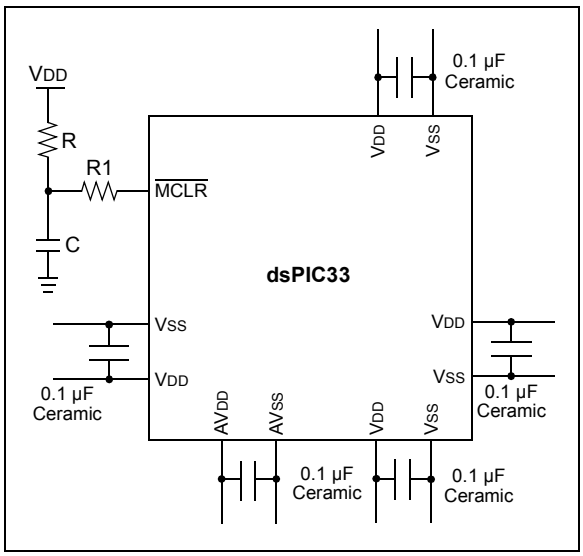

2.2.1 BULK CAPACITORS

On boards with power traces running longer than six inches in length, it is suggested to use a bulk capacitor for integrated circuits, including DSCs, to supply a local power source. The value of the bulk capacitor should be determined based on the trace resistance that connects the power supply source to the device and the maximum current drawn by the device in the application. In other words, select the bulk capacitor so that it meets the acceptable voltage sag at the device. Typical values range from 4.7 µF to 47 µF.

2.3 Master Clear ($\overline{\text{MCLR}}$) Pin

The $\overline{\text{MCLR}}$ pin provides two specific device functions:

- Device Reset
- Device Programming and Debugging.

During device programming and debugging, the resistance and capacitance that can be added to the pin must be considered. Device programmers and debuggers drive the $\overline{\text{MCLR}}$ pin. Consequently, specific voltage levels (V_{IH} and V_{IL}) and fast signal transitions must not be adversely affected. Therefore, specific values of R and C will need to be adjusted based on the application and PCB requirements.

For example, as shown in Figure 2-2, it is recommended that the capacitor, C, be isolated from the $\overline{\text{MCLR}}$ pin during programming and debugging operations.

Place the components, as shown in Figure 2-2, within one-quarter inch (6 mm) from the $\overline{\text{MCLR}}$ pin.

FIGURE 2-2: EXAMPLE OF $\overline{\text{MCLR}}$ PIN CONNECTIONS

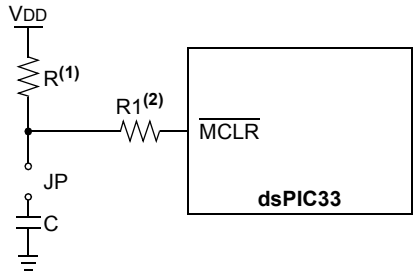

Note 1: R ≤ 10 kΩ is recommended. A suggested starting value is 10 kΩ. Ensure that the $\overline{\text{MCLR}}$ pin V_{IH} and V_{IL} specifications are met.

2: R1 ≤ 470Ω will limit any current flowing into $\overline{\text{MCLR}}$ from the external capacitor, C, in the event of $\overline{\text{MCLR}}$ pin breakdown due to Electrostatic Discharge (ESD) or Electrical Overstress (EOS). Ensure that the $\overline{\text{MCLR}}$ pin V_{IH} and V_{IL} specifications are met.

© 2018-2019 Microchip Technology Inc.

2.4 ICSP Pins

The PGCx and PGDx pins are used for ICSP and debugging purposes. It is recommended to keep the trace length between the ICSP connector and the ICSP pins on the device as short as possible. If the ICSP connector is expected to experience an ESD event, a series resistor is recommended, with the value in the range of a few tens of Ohms, not to exceed 100 Ohms.

Pull-up resistors, series diodes and capacitors on the PGCx and PGDx pins are not recommended as they will interfere with the programmer/debugger communications to the device. If such discrete components are an application requirement, they should be removed from the circuit during programming and debugging. Alternatively, refer to the AC/DC characteristics and timing requirements information in the respective device Flash programming specification for information on capacitive loading limits and pin Voltage Input High (V_{IH}) and Voltage Input Low (V_{IL}) requirements.

Ensure that the “Communication Channel Select” (i.e., PGCx/PGDx pins) programmed into the device matches the physical connections for the ICSP to MPLAB® debugger tool.

For more information on the MPLAB programmer/debugger connection requirements, refer to the Microchip website.

2.5 External Oscillator Pins

Many DSCs have options for at least two oscillators: a high-frequency Primary Oscillator (POSC) and a low-frequency Secondary Oscillator (SOSC). For details, see **Section 9.4 “Primary Oscillator (POSC)”**.

The oscillator circuit should be placed on the same side of the board as the device. Also, place the oscillator circuit close to the respective oscillator pins, not exceeding one-half inch (12 mm) distance between them. The load capacitors should be placed next to the oscillator itself, on the same side of the board. Use a grounded copper pour around the oscillator circuit to isolate them from surrounding circuits. The grounded copper pour should be routed directly to the MCU ground. Do not run any signal traces or power traces inside the ground pour. Also, if using a two-sided board, avoid any traces on the other side of the board where the crystal is placed. A suggested layout is shown in Figure 2-3.

FIGURE 2-3: SUGGESTED PLACEMENT OF THE OSCILLATOR CIRCUIT

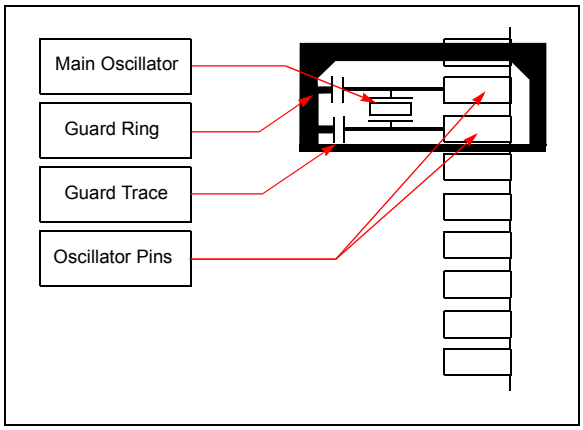

2.6 Oscillator Value Conditions on Device Start-up

If the PLL of the target device is enabled and configured for the device start-up oscillator, the maximum oscillator source frequency must be limited to a certain frequency (see **Section 9.0 "Oscillator with High-Frequency PLL"**) to comply with device PLL start-up conditions. This means that if the external oscillator frequency is outside this range, the application must start up in the FRC mode first. The default PLL settings after a POR with an oscillator frequency outside this range will violate the device operating speed.

Once the device powers up, the application firmware can initialize the PLL SFRs, CLKDIV and PLLFBD, to a suitable value, and then perform a clock switch to the Oscillator + PLL clock source. Note that clock switching must be enabled in the device Configuration Word.

2.7 Unused I/Os

Unused I/O pins should be configured as outputs and driven to a logic low state.

Alternatively, connect a 1k to 10k resistor between VSS and unused pins, and drive the output to logic low.

2.8 Targeted Applications

- Power Factor Correction (PFC):
  - Interleaved PFC
  - Critical Conduction PFC
  - Bridgeless PFC
- DC/DC Converters:
  - Buck, Boost, Forward, Flyback, Push-Pull
  - Half/Full-Bridge
  - Phase-Shift Full-Bridge
  - Resonant Converters
- DC/AC:
  - Half/Full-Bridge Inverter
  - Resonant Inverter
- Motor Control
  - BLDC
  - PMSM
  - SR
  - ACIM

Examples of typical application connections are shown in Figure 2-4 through Figure 2-6.

FIGURE 2-4: INTERLEAVED PFC

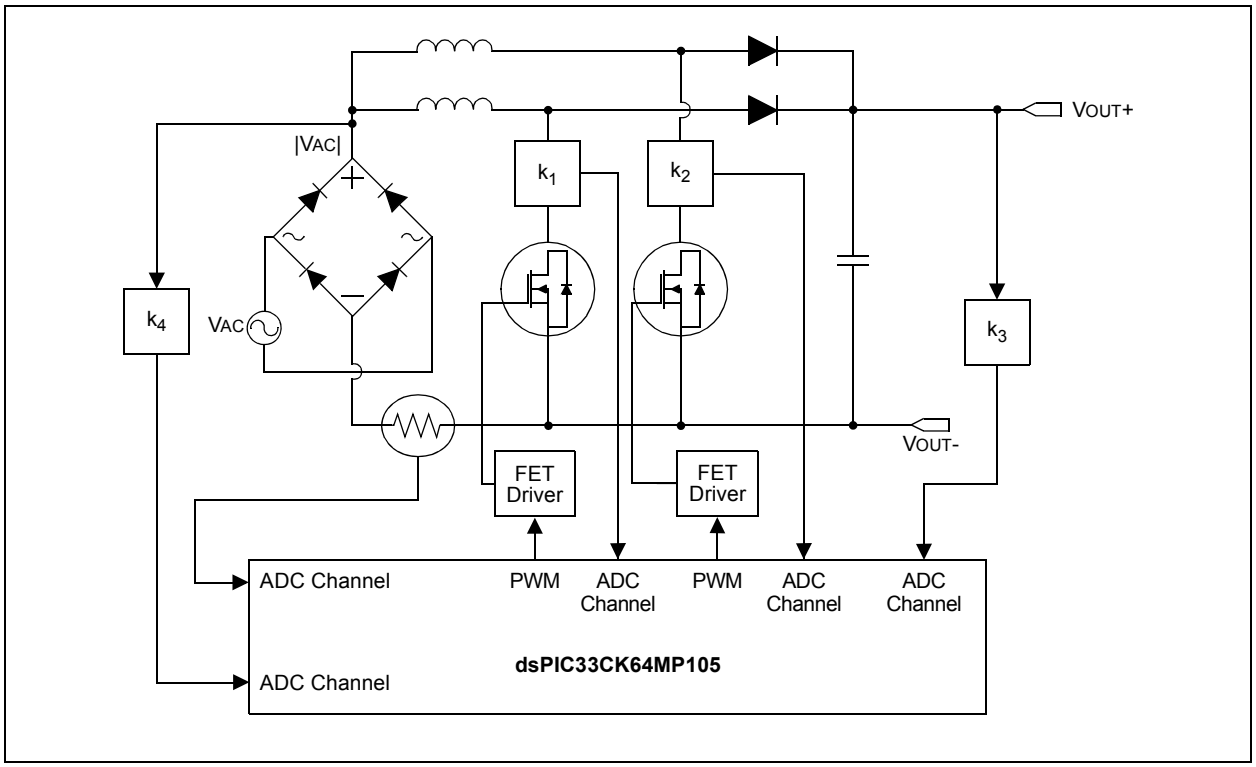

© 2018-2019 Microchip Technology Inc.

FIGURE 2-5: PHASE-SHIFTED FULL-BRIDGE CONVERTER

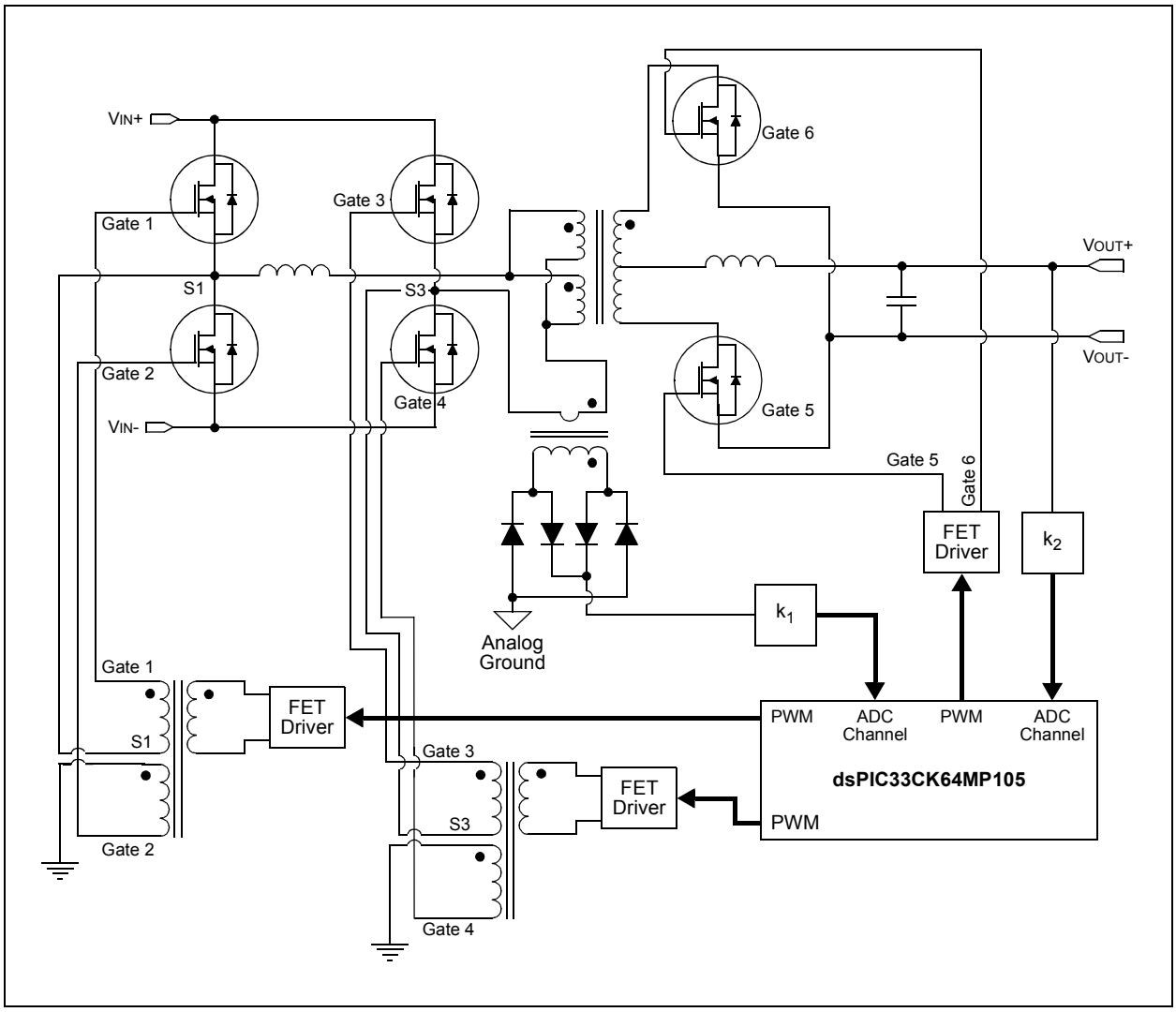

FIGURE 2-6: OFF-LINE UPS

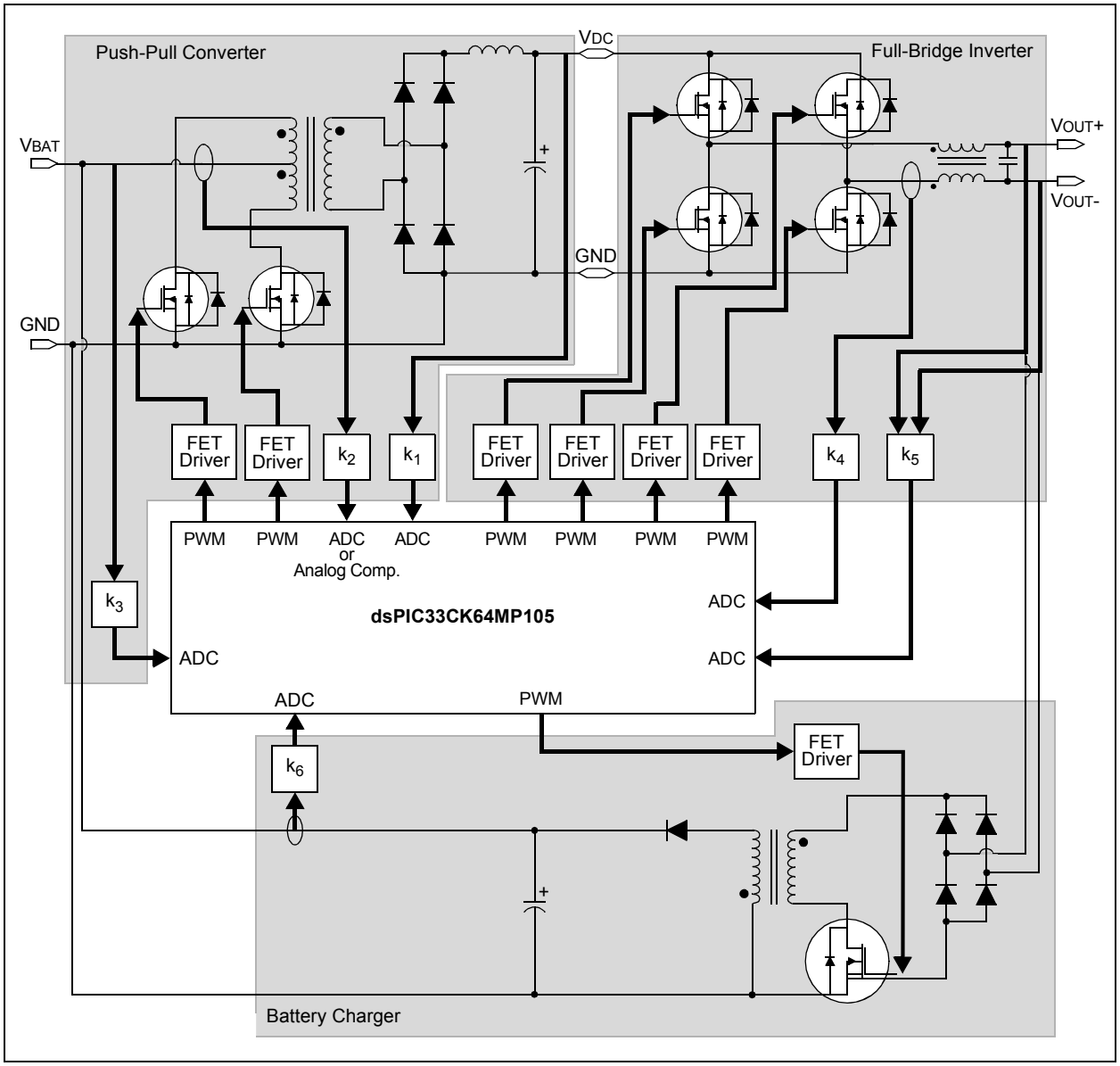

© 2018-2019 Microchip Technology Inc.

3.0 CPU

Note 1: This data sheet summarizes the features of the dsPIC33CK64MP105 family of devices. It is not intended to be a comprehensive reference source. To complement the information in this data sheet, refer to **"Enhanced CPU"** (www.microchip.com/DS70005158) in the *"dsPIC33/PIC24 Family Reference Manual"*.

2: Some registers and associated bits described in this section may not be available on all devices. Refer to **Section 4.0 "Memory Organization"** in this data sheet for device-specific register and bit information.

The dsPIC33CK64MP105 family CPU has a 16-bit (data) modified Harvard architecture with an enhanced instruction set, including significant support for Digital Signal Processing (DSP). The CPU has a 24-bit instruction word with a variable length opcode field. The Program Counter (PC) is 23 bits wide and addresses up to 4M x 24 bits of user program memory space.

An instruction prefetch mechanism helps maintain throughput and provides predictable execution. Most instructions execute in a single-cycle effective execution rate, with the exception of instructions that change the program flow, the double-word move (`MOV.D`) instruction, PSV accesses and the table instructions. Overhead-free program loop constructs are supported using the `DO` and `REPEAT` instructions, both of which are interruptible at any point.

3.1 Registers

The dsPIC33CK64MP105 devices have sixteen, 16-bit Working registers in the programmer's model. Each of the Working registers can act as a Data, Address or Address Offset register. The 16th Working register (W15) operates as a Software Stack Pointer (SSP) for interrupts and calls.

In addition, the dsPIC33CK64MP105 devices include four Alternate Working register sets, which consist of W0 through W14. The Alternate Working registers can be made persistent to help reduce the saving and restoring of register content during Interrupt Service Routines (ISRs). The Alternate Working registers can be assigned to a specific Interrupt Priority Level (IPL1 through IPL6) by configuring the CTXTx[2:0] bits in the FALTREG Configuration register. The Alternate Working registers can also be accessed manually by using the `CTXTSWP` instruction. The CCTXI[2:0] and MCTXI[2:0] bits in the CTXTSTAT register can be used to identify the current, and most recent, manually selected Working register sets.

3.2 Instruction Set

The instruction set for dsPIC33CK64MP105 devices has two classes of instructions: the MCU class of instructions and the DSP class of instructions. These two instruction classes are seamlessly integrated into the architecture and execute from a single execution unit. The instruction set includes many addressing modes and was designed for optimum C compiler efficiency.

3.3 Data Space Addressing

The base Data Space can be addressed as up to 4K words or 8 Kbytes, and is split into two blocks, referred to as X and Y data memory. Each memory block has its own independent Address Generation Unit (AGU). The MCU class of instructions operates solely through the X memory AGU, which accesses the entire memory map as one linear Data Space. Certain DSP instructions operate through the X and Y AGUs to support dual operand reads, which splits the data address space into two parts. The X and Y Data Space boundary is device-specific.

The upper 32 Kbytes of the Data Space memory map can optionally be mapped into Program Space (PS) at any 16K program word boundary. The program-to-Data Space mapping feature, known as Program Space Visibility (PSV), lets any instruction access Program Space as if it were Data Space. Refer to **"Data Memory"** (www.microchip.com/DS70595) in the *"dsPIC33/PIC24 Family Reference Manual"* for more details on PSV and table accesses.

On dsPIC33CK64MP105 family devices, overhead-free circular buffers (Modulo Addressing) are supported in both X and Y address spaces. The Modulo Addressing removes the software boundary checking overhead for DSP algorithms. The X AGU Circular Addressing can be used with any of the MCU class of instructions. The X AGU also supports Bit-Reversed Addressing to greatly simplify input or output data re-ordering for radix-2 FFT algorithms.

3.4 Addressing Modes

The CPU supports these addressing modes:

- Inherent (no operand)
- Relative
- Literal
- Memory Direct
- Register Direct
- Register Indirect

Each instruction is associated with a predefined addressing mode group, depending upon its functional requirements. As many as six addressing modes are supported for each instruction.

FIGURE 3-1: dsPIC33CK64MP105 FAMILY CPU BLOCK DIAGRAM

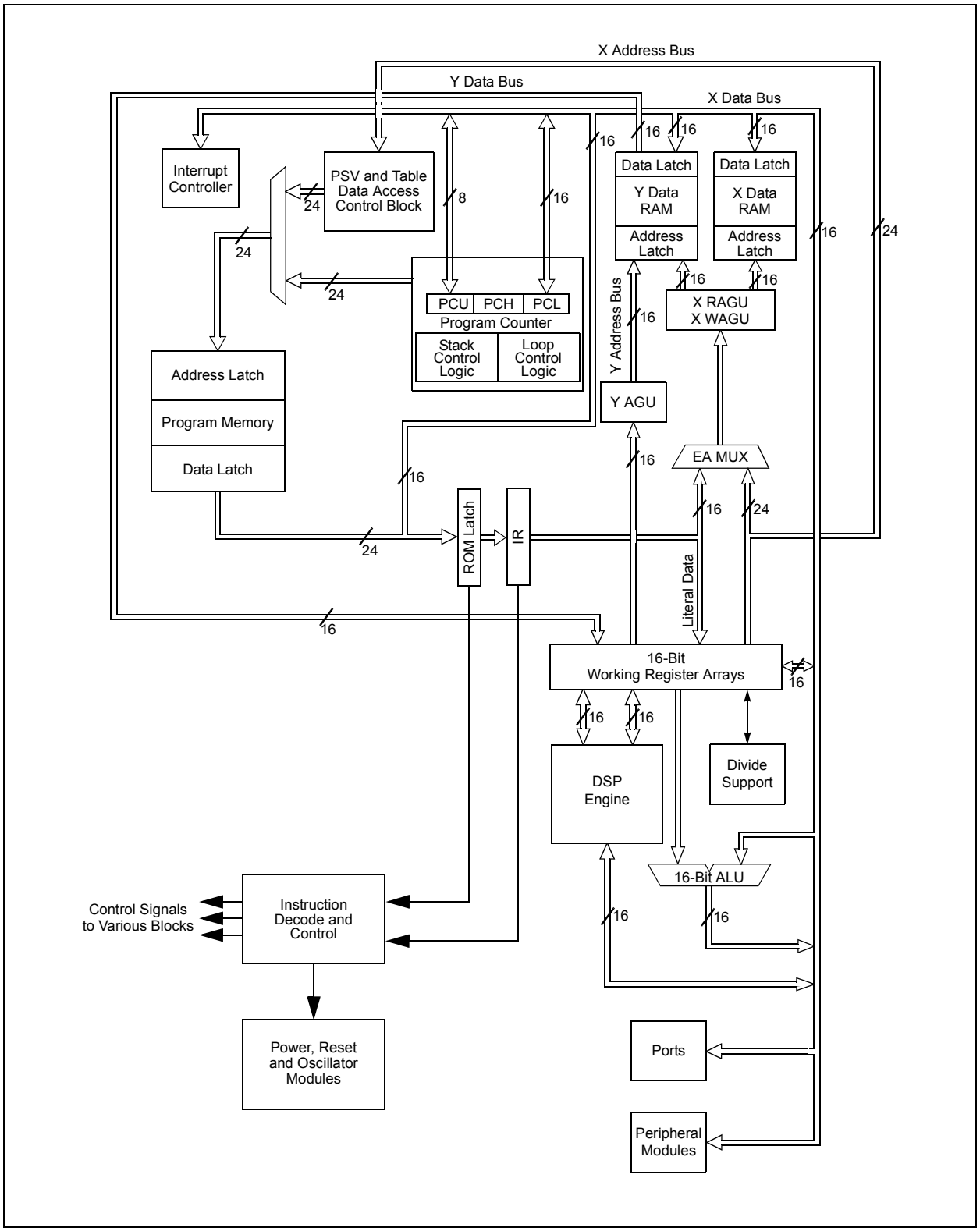

© 2018-2019 Microchip Technology Inc.

3.4.1 PROGRAMMER'S MODEL

The programmer's model for the dsPIC33CK64MP105 family is shown in Figure 3-2. All registers in the programmer's model are memory-mapped and can be manipulated directly by instructions. Table 3-1 lists a description of each register.

In addition to the registers contained in the programmer's model, the dsPIC33CK64MP105 devices contain control registers for Modulo Addressing, Bit-Reversed Addressing and interrupts. These registers are described in subsequent sections of this document.

All registers associated with the programmer's model are memory-mapped, as shown in Figure 3-2.

TABLE 3-1: PROGRAMMER'S MODEL REGISTER DESCRIPTIONS

Register(s) Name	Description
W0 through W15(1)	Working Register Array
W0 through W14(1)	Alternate Working Register Array 1
W0 through W14(1)	Alternate Working Register Array 2
W0 through W14(1)	Alternate Working Register Array 3
W0 through W14(1)	Alternate Working Register Array 4
ACCA, ACCB	40-Bit DSP Accumulators (Additional Four Alternate Accumulators)
PC	23-Bit Program Counter
SR	ALU and DSP Engine STATUS Register
SPLIM	Stack Pointer Limit Value Register
TBLPAG	Table Memory Page Address Register
DSRPAG	Extended Data Space (EDS) Read Page Register
RCOUNT	`REPEAT` Loop Counter Register
DCOUNT	`DO` Loop Counter Register
DOSTARTH, DOSTARTL(2)	`DO` Loop Start Address Register (High and Low)
DOENDH, DOENDL	`DO` Loop End Address Register (High and Low)
CORCON	Contains DSP Engine, `DO` Loop Control and Trap Status bits

Note 1: Memory-mapped W0 through W14 represent the value of the register in the currently active CPU context.

2: The DOSTARTH and DOSTARTL registers are read-only.

FIGURE 3-2: PROGRAMMER'S MODEL

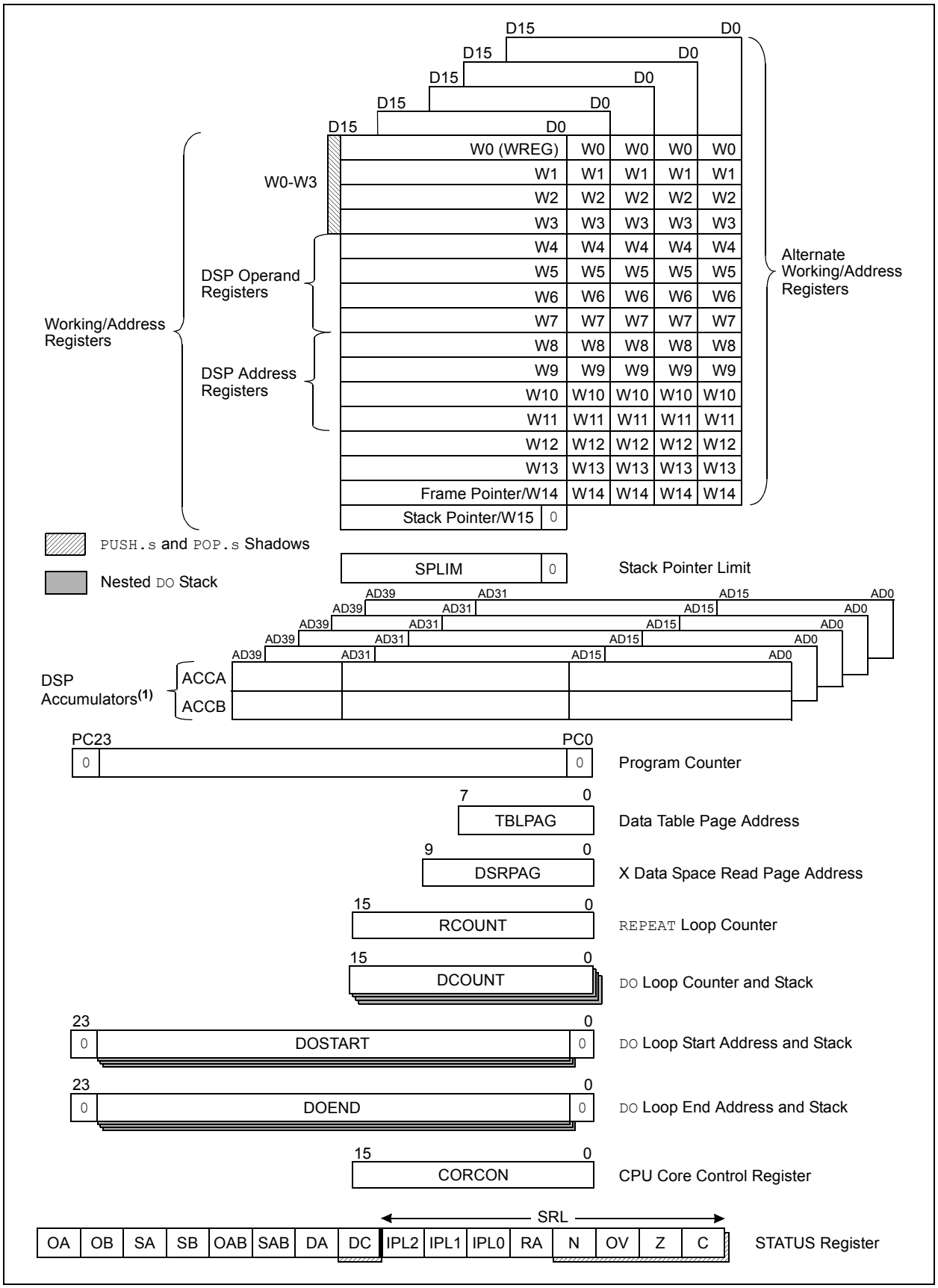

© 2018-2019 Microchip Technology Inc.

3.4.2 CPU RESOURCES

Many useful resources are provided on the main product page of the Microchip website for the devices listed in this data sheet. This product page contains the latest updates and additional information.

3.4.2.1 Key Resources

- **"Enhanced CPU"** (www.microchip.com/DS70005158) in the *"dsPIC33/PIC24 Family Reference Manual"*
- Code Samples
- Application Notes
- Software Libraries
- Webinars
- All related *"dsPIC33/PIC24 Family Reference Manual"* Sections
- Development Tools

3.4.3 CPU CONTROL REGISTERS

REGISTER 3-1: SR: CPU STATUS REGISTER

R/W-0	R/W-0	R/W-0	R/W-0	R/C-0	R/C-0	R-0	R/W-0
OA	OB	SA(3)	SB(3)	OAB	SAB	DA	DC
bit 15							bit 8

R/W-0(2)	R/W-0(2)	R/W-0(2)	R-0	R/W-0	R/W-0	R/W-0	R/W-0
IPL2(1)	IPL1(1)	IPL0(1)	RA	N	OV	Z	C
bit 7							bit 0

Legend:	C = Clearable bit		
R = Readable bit	W = Writable bit	U = Unimplemented bit, read as ‘0’	
-n = Value at POR	‘1’= Bit is set	‘0’ = Bit is cleared	x = Bit is unknown

bit 15 **OA:** Accumulator A Overflow Status bit
1 = Accumulator A has overflowed
0 = Accumulator A has not overflowed

bit 14 **OB:** Accumulator B Overflow Status bit
1 = Accumulator B has overflowed
0 = Accumulator B has not overflowed

bit 13 **SA:** Accumulator A Saturation ‘Sticky’ Status bit(3)
1 = Accumulator A is saturated or has been saturated at some time
0 = Accumulator A is not saturated

bit 12 **SB:** Accumulator B Saturation ‘Sticky’ Status bit(3)
1 = Accumulator B is saturated or has been saturated at some time
0 = Accumulator B is not saturated

bit 11 **OAB:** OA || OB Combined Accumulator Overflow Status bit
1 = Accumulator A or B has overflowed
0 = Neither Accumulator A or B has overflowed

bit 10 **SAB:** SA || SB Combined Accumulator ‘Sticky’ Status bit
1 = Accumulator A or B is saturated or has been saturated at some time
0 = Neither Accumulator A or B is saturated

bit 9 **DA:** DO Loop Active bit
1 = DO loop is in progress
0 = DO loop is not in progress

bit 8 **DC:** MCU ALU Half Carry/$\overline{\text{Borrow}}$ bit
1 = A carry-out from the 4th low-order bit (for byte-sized data) or 8th low-order bit (for word-sized data) of the result occurred
0 = No carry-out from the 4th low-order bit (for byte-sized data) or 8th low-order bit (for word-sized data) of the result occurred

Note 1: The IPL[2:0] bits are concatenated with the IPL[3] bit (CORCON[3]) to form the CPU Interrupt Priority Level. The value in parentheses indicates the IPL, if IPL[3] = 1. User interrupts are disabled when IPL[3] = 1.

2: The IPL[2:0] Status bits are read-only when the NSTDIS bit (INTCON1[15]) = 1.

3: A data write to the SR register can modify the SA and SB bits by either a data write to SA and SB or by clearing the SAB bit. To avoid a possible SA or SB bit write race condition, the SA and SB bits should not be modified using bit operations.

© 2018-2019 Microchip Technology Inc.

REGISTER 3-1: SR: CPU STATUS REGISTER (CONTINUED)

bit 7-5 **IPL[2:0]:** CPU Interrupt Priority Level Status bits(1,2)
111 = CPU Interrupt Priority Level is 7 (15); user interrupts are disabled
110 = CPU Interrupt Priority Level is 6 (14)
101 = CPU Interrupt Priority Level is 5 (13)
100 = CPU Interrupt Priority Level is 4 (12)
011 = CPU Interrupt Priority Level is 3 (11)
010 = CPU Interrupt Priority Level is 2 (10)
001 = CPU Interrupt Priority Level is 1 (9)
000 = CPU Interrupt Priority Level is 0 (8)

bit 4 **RA:** REPEAT Loop Active bit
1 = REPEAT loop is in progress
0 = REPEAT loop is not in progress

bit 3 **N:** MCU ALU Negative bit
1 = Result was negative
0 = Result was non-negative (zero or positive)

bit 2 **OV:** MCU ALU Overflow bit
This bit is used for signed arithmetic (two's complement). It indicates an overflow of the magnitude that causes the sign bit to change state.
1 = Overflow occurred for signed arithmetic (in this arithmetic operation)
0 = No overflow occurred

bit 1 **Z:** MCU ALU Zero bit
1 = An operation that affects the Z bit has set it at some time in the past
0 = The most recent operation that affects the Z bit has cleared it (i.e., a non-zero result)

bit 0 **C:** MCU ALU Carry/$\overline{\text{Borrow}}$ bit
1 = A carry-out from the Most Significant bit of the result occurred
0 = No carry-out from the Most Significant bit of the result occurred

Note 1: The IPL[2:0] bits are concatenated with the IPL[3] bit (CORCON[3]) to form the CPU Interrupt Priority Level. The value in parentheses indicates the IPL, if IPL[3] = 1. User interrupts are disabled when IPL[3] = 1.

2: The IPL[2:0] Status bits are read-only when the NSTDIS bit (INTCON1[15]) = 1.

3: A data write to the SR register can modify the SA and SB bits by either a data write to SA and SB or by clearing the SAB bit. To avoid a possible SA or SB bit write race condition, the SA and SB bits should not be modified using bit operations.

REGISTER 3-2: CORCON: CORE CONTROL REGISTER

R/W-0	U-0	R/W-0	R/W-0	R/W-0	R-0	R-0	R-0
VAR	—	US1	US0	EDT(1)	DL2	DL1	DL0
bit 15							bit 8

R/W-0	R/W-0	R/W-1	R/W-0	R/C-0	R-0	R/W-0	R/W-0
SATA	SATB	SATDW	ACCSAT	IPL3(2)	SFA	RND	IF
bit 7							bit 0

Legend:	C = Clearable bit		
R = Readable bit	W = Writable bit	U = Unimplemented bit, read as ‘0’	
-n = Value at POR	‘1’ = Bit is set	‘0’ = Bit is cleared	x = Bit is unknown

bit 15 **VAR:** Variable Exception Processing Latency Control bit
1 = Variable exception processing is enabled
0 = Fixed exception processing is enabled

bit 14 **Unimplemented:** Read as ‘0’

bit 13-12 **US[1:0]:** DSP Multiply Unsigned/Signed Control bits
11 = Reserved
10 = DSP engine multiplies are mixed sign
01 = DSP engine multiplies are unsigned
00 = DSP engine multiplies are signed

bit 11 **EDT:** Early DO Loop Termination Control bit(1)
1 = Terminates executing DO loop at the end of the current loop iteration
0 = No effect

bit 10-8 **DL[2:0]:** DO Loop Nesting Level Status bits
111 = Seven DO loops are active
. . .
001 = One DO loop is active
000 = Zero DO loops are active

bit 7 **SATA:** ACCA Saturation Enable bit
1 = Accumulator A saturation is enabled
0 = Accumulator A saturation is disabled

bit 6 **SATB:** ACCB Saturation Enable bit
1 = Accumulator B saturation is enabled
0 = Accumulator B saturation is disabled

bit 5 **SATDW:** Data Space Write from DSP Engine Saturation Enable bit
1 = Data Space write saturation is enabled
0 = Data Space write saturation is disabled

bit 4 **ACCSAT:** Accumulator Saturation Mode Select bit
1 = 9.31 saturation (super saturation)
0 = 1.31 saturation (normal saturation)

bit 3 **IPL3:** CPU Interrupt Priority Level Status bit 3(2)
1 = CPU Interrupt Priority Level is greater than 7
0 = CPU Interrupt Priority Level is 7 or less

Note 1: This bit is always read as ‘0’.
2: The IPL3 bit is concatenated with the IPL[2:0] bits (SR[7:5]) to form the CPU Interrupt Priority Level.

© 2018-2019 Microchip Technology Inc.

REGISTER 3-2: CORCON: CORE CONTROL REGISTER (CONTINUED)

bit 2 **SFA:** Stack Frame Active Status bit
1 = Stack frame is active; W14 and W15 address 0x0000 to 0xFFFF, regardless of DSRPAG
0 = Stack frame is not active; W14 and W15 address the base Data Space

bit 1 **RND:** Rounding Mode Select bit
1 = Biased (conventional) rounding is enabled
0 = Unbiased (convergent) rounding is enabled

bit 0 **IF:** Integer or Fractional Multiplier Mode Select bit
1 = Integer mode is enabled for DSP multiply
0 = Fractional mode is enabled for DSP multiply

Note 1: This bit is always read as '0'.
2: The IPL3 bit is concatenated with the IPL[2:0] bits (SR[7:5]) to form the CPU Interrupt Priority Level.

REGISTER 3-3: CTXTSTAT: CPU W REGISTER CONTEXT STATUS REGISTER

U-0	U-0	U-0	U-0	U-0	R-0	R-0	R-0
—	—	—	—	—	CCTXI2	CCTXI1	CCTXI0
bit 15							bit 8

U-0	U-0	U-0	U-0	U-0	R-0	R-0	R-0
—	—	—	—	—	MCTXI2	MCTXI1	MCTXI0
bit 7							bit 0

Legend:			
R = Readable bit	W = Writable bit	U = Unimplemented bit, read as '0'	
-n = Value at POR	'1' = Bit is set	'0' = Bit is cleared	x = Bit is unknown

bit 15-11 **Unimplemented:** Read as '0'

bit 10-8 **CCTXI[2:0]:** Current (W Register) Context Identifier bits
111 = Reserved
...
100 = Alternate Working Register Set 4 is currently in use
011 = Alternate Working Register Set 3 is currently in use
010 = Alternate Working Register Set 2 is currently in use
001 = Alternate Working Register Set 1 is currently in use
000 = Default register set is currently in use

bit 7-3 **Unimplemented:** Read as '0'

bit 2-0 **MCTXI[2:0]:** Manual (W Register) Context Identifier bits
111 = Reserved
...
100 = Alternate Working Register Set 4 was most recently manually selected
011 = Alternate Working Register Set 3 was most recently manually selected
010 = Alternate Working Register Set 2 was most recently manually selected
001 = Alternate Working Register Set 1 was most recently manually selected
000 = Default register set was most recently manually selected

3.4.4 ARITHMETIC LOGIC UNIT (ALU)

The dsPIC33CK64MP105 family ALU is 16 bits wide and is capable of addition, subtraction, bit shifts and logic operations. Unless otherwise mentioned, arithmetic operations are two's complement in nature. Depending on the operation, the ALU can affect the values of the Carry (C), Zero (Z), Negative (N), Overflow (OV) and Digit Carry (DC) Status bits in the SR register. The C and DC Status bits operate as Borrow and Digit Borrow bits, respectively, for subtraction operations.

The ALU can perform 8-bit or 16-bit operations, depending on the mode of the instruction that is used. Data for the ALU operation can come from the W register array or data memory, depending on the addressing mode of the instruction. Likewise, output data from the ALU can be written to the W register array or a data memory location.

Refer to the *"16-Bit MCU and DSC Programmer's Reference Manual"* (www.microchip.com/DS70000157) for information on the SR bits affected by each instruction.

The core CPU incorporates hardware support for both multiplication and division. This includes a dedicated hardware multiplier and support hardware for 16-bit divisor division.

3.4.4.1 Multiplier

Using the high-speed, 17-bit x 17-bit multiplier, the ALU supports unsigned, signed or mixed-sign operation in several MCU multiplication modes:

- 16-bit x 16-bit signed
- 16-bit x 16-bit unsigned
- 16-bit signed x 5-bit (literal) unsigned
- 16-bit signed x 16-bit unsigned
- 16-bit unsigned x 5-bit (literal) unsigned
- 16-bit unsigned x 16-bit signed
- 8-bit unsigned x 8-bit unsigned

3.4.4.2 Divider

The divide block supports 32-bit/16-bit and 16-bit/16-bit signed and unsigned integer divide operations with the following data sizes:

- 32-bit signed/16-bit signed divide
- 32-bit unsigned/16-bit unsigned divide
- 16-bit signed/16-bit signed divide
- 16-bit unsigned/16-bit unsigned divide

The 16-bit signed and unsigned `DIV` instructions can specify any W register for both the 16-bit divisor (Wn) and any W register (aligned) pair (W(m + 1):Wm) for the 32-bit dividend. The divide algorithm takes one cycle per bit of divisor, so both 32-bit/16-bit and 16-bit/16-bit instructions take the same number of cycles to execute. There are additional instructions: `DIV2` and `DIVF2`. Divide instructions will complete in six cycles.

3.4.5 DSP ENGINE

The DSP engine consists of a high-speed 17-bit x 17-bit multiplier, a 40-bit barrel shifter and a 40-bit adder/subtracter (with two target accumulators, round and saturation logic).

The DSP engine can also perform inherent accumulator-to-accumulator operations that require no additional data. These instructions are, `ADD`, `SUB`, `NEG`, `MIN` and `MAX`.

The DSP engine has options selected through bits in the CPU Core Control register (CORCON), as listed below:

- Fractional or integer DSP multiply (IF)
- Signed, unsigned or mixed-sign DSP multiply (USx)
- Conventional or convergent rounding (RND)
- Automatic saturation on/off for ACCA (SATA)
- Automatic saturation on/off for ACCB (SATB)
- Automatic saturation on/off for writes to data memory (SATDW)
- Accumulator Saturation mode selection (ACCSAT)

TABLE 3-2: DSP INSTRUCTIONS SUMMARY

Instruction	Algebraic Operation	ACC Write-Back
`CLR`	$A = 0$	Yes
`ED`	$A = (x - y)^2$	No
`EDAC`	$A = A + (x - y)^2$	No
`MAC`	$A = A + (x \bullet y)$	Yes
`MAC`	$A = A + x^2$	No
`MOVSAC`	No change in A	Yes
`MPY`	$A = x \bullet y$	No
`MPY`	$A = x^2$	No
`MPY.N`	$A = -x \bullet y$	No
`MSC`	$A = A - x \bullet y$	Yes

© 2018-2019 Microchip Technology Inc.

4.0 MEMORY ORGANIZATION

Note: This data sheet summarizes the features of the dsPIC33CK64MP105 family of devices. It is not intended to be a comprehensive reference source. To complement the information in this data sheet, refer to **"dsPIC33E/PIC24E Program Memory"** (www.microchip.com/DS70000613) in the *"dsPIC33/PIC24 Family Reference Manual"*.

The dsPIC33CK64MP105 family architecture features separate program and data memory spaces, and buses. This architecture also allows the direct access of program memory from the Data Space (DS) during code execution.

4.1 Program Address Space

The program address memory space of the dsPIC33CK64MP105 family devices is 4M instructions. The space is addressable by a 24-bit value derived either from the 23-bit PC during program execution, or from table operation or Data Space remapping, as described in **Section 4.4.5 "Interfacing Program and Data Memory Spaces"**.

User application access to the program memory space is restricted to the lower half of the address range (0x000000 to 0x7FFFFF). The exception is the use of `TBLRD` operations, which use TBLPAG[7] to permit access to calibration data and Device ID sections of the configuration memory space.

The program memory maps for dsPIC33CK64MP105 devices are shown in Figure 4-1 through Figure 4-3.

FIGURE 4-1: PROGRAM MEMORY MAP FOR dsPIC33CK32MP10X DEVICES(1)

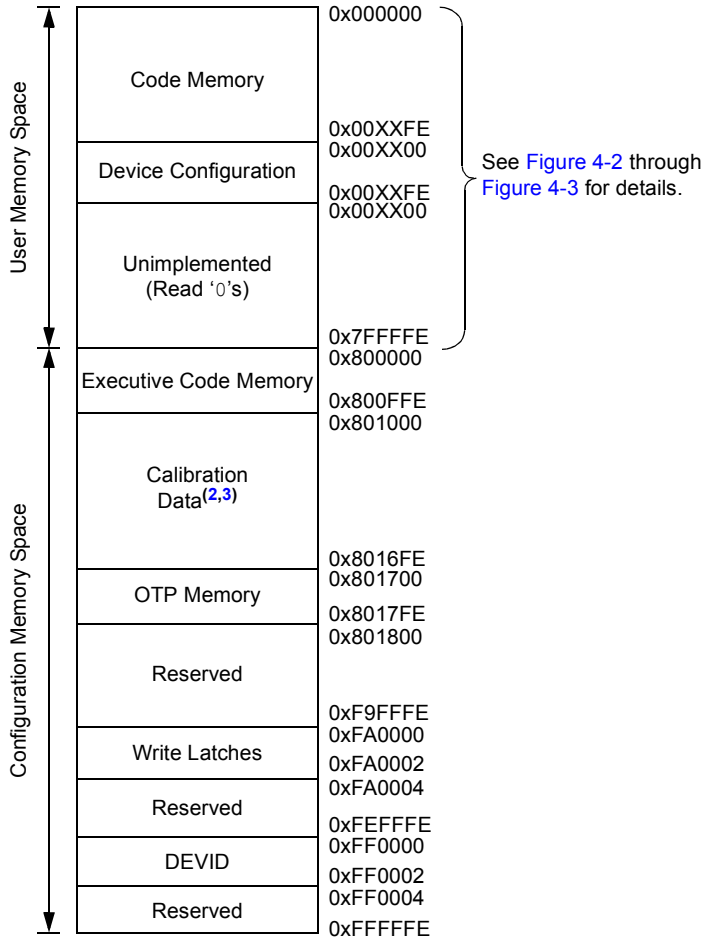

Note 1: Memory areas are not shown to scale.
2: Calibration data area must be maintained during programming.
3: Calibration data area includes UDID and ICSP™ Write Inhibit registers locations.

FIGURE 4-2: CODE MEMORY MAP FOR dsPIC33CK64MP10X DEVICES(1)

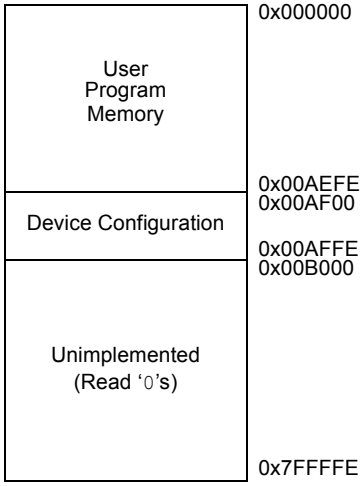

Note 1: Memory areas are not shown to scale.

FIGURE 4-3: CODE MEMORY MAP FOR dsPIC33CK32MP10X DEVICES(1)

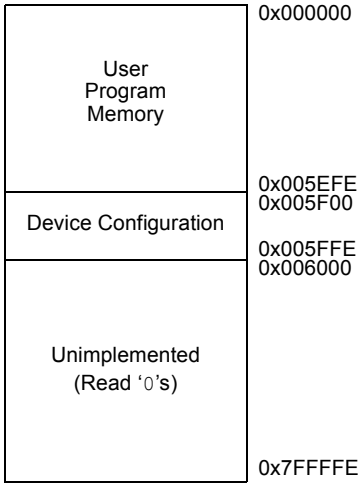

Note 1: Memory areas are not shown to scale.

© 2018-2019 Microchip Technology Inc.

4.1.1 PROGRAM MEMORY ORGANIZATION

The program memory space is organized in word-addressable blocks. Although it is treated as 24 bits wide, it is more appropriate to think of each address of the program memory as a lower and upper word, with the upper byte of the upper word being unimplemented. The lower word always has an even address, while the upper word has an odd address (Figure 4-4).

Program memory addresses are always word-aligned on the lower word, and addresses are incremented or decremented, by two, during code execution. This arrangement provides compatibility with data memory space addressing and makes data in the program memory space accessible.

4.1.2 INTERRUPT AND TRAP VECTORS

All dsPIC33CK64MP105 family devices reserve the addresses between 0x000000 and 0x000200 for hard-coded program execution vectors. A hardware Reset vector is provided to redirect code execution from the default value of the PC on device Reset to the actual start of code. A `GOTO` instruction is programmed by the user application at address, 0x000000, of Flash memory, with the actual address for the start of code at address, 0x000002, of Flash memory.

A more detailed discussion of the Interrupt Vector Tables (IVTs) is provided in **Section 7.0 "Interrupt Controller"**.

FIGURE 4-4: PROGRAM MEMORY ORGANIZATION

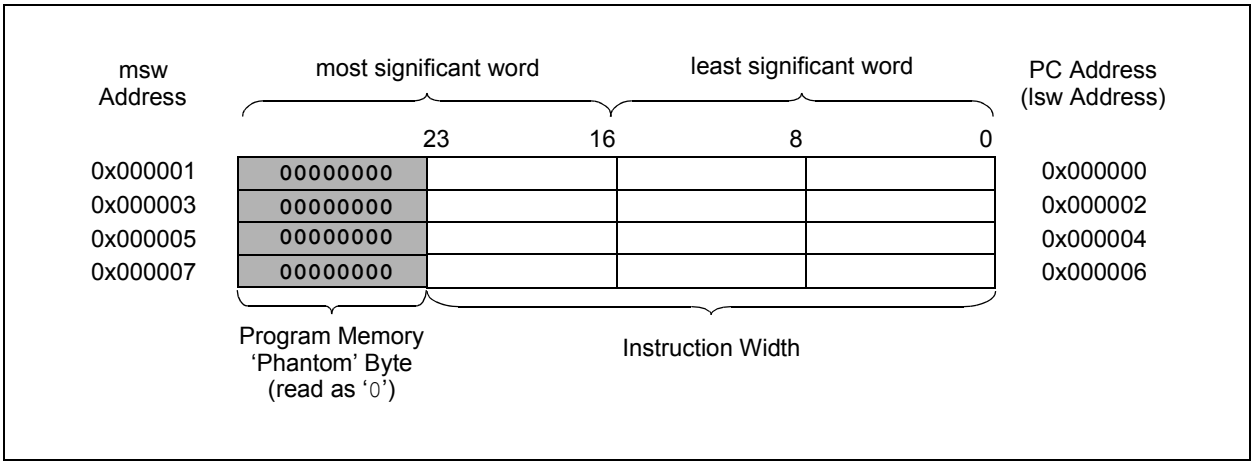

4.1.3 UNIQUE DEVICE IDENTIFIER (UDID)

All dsPIC33CK64MP105 family devices are individually encoded during final manufacturing with a Unique Device Identifier or UDID. The UDID cannot be erased by a bulk erase command or any other user-accessible means. This feature allows for manufacturing traceability of Microchip Technology devices in applications where this is a requirement. It may also be used by the application manufacturer for any number of things that may require unique identification, such as:

- Tracking the device
- Unique serial number
- Unique security key

The UDID comprises five 24-bit program words. When taken together, these fields form a unique 120-bit identifier.

The UDID is stored in five read-only locations, located between 0x801200 and 0x801208 in the device configuration space. Table 4-1 lists the addresses of the identifier words and shows their contents

TABLE 4-1: UDID ADDRESSES

UDID	Address	Description
UDID1	0x801200	UDID Word 1
UDID2	0x801202	UDID Word 2
UDID3	0x801204	UDID Word 3
UDID4	0x801206	UDID Word 4
UDID5	0x801208	UDID Word 5

4.2 Data Address Space

The dsPIC33CK64MP105 family CPU has a separate 16-bit wide data memory space. The Data Space is accessed using separate Address Generation Units (AGUs) for read and write operations. The data memory map is shown in Figure 4-5.

All Effective Addresses (EAs) in the data memory space are 16 bits wide and point to bytes within the Data Space. This arrangement gives a base Data Space address range of 64 Kbytes or 32K words.

The lower half of the data memory space (i.e., when EA[15] = `0`) is used for implemented memory addresses, while the upper half (EA[15] = `1`) is reserved for the Program Space Visibility (PSV).

The dsPIC33CK64MP105 family devices implement up to 16 Kbytes of data memory. If an EA points to a location outside of this area, an all-zero word or byte is returned.

4.2.1 DATA SPACE WIDTH

The data memory space is organized in byte-addressable, 16-bit wide blocks. Data is aligned in data memory and registers as 16-bit words, but all Data Space EAs resolve to bytes. The Least Significant Bytes (LSBs) of each word have even addresses, while the Most Significant Bytes (MSBs) have odd addresses.

4.2.2 DATA MEMORY ORGANIZATION AND ALIGNMENT

To maintain backward compatibility with PIC® MCU devices and improve Data Space memory usage efficiency, the dsPIC33CK64MP105 family instruction set supports both word and byte operations. As a consequence of byte accessibility, all Effective Address calculations are internally scaled to step through word-aligned memory. For example, the core recognizes that Post-Modified Register Indirect Addressing mode [Ws++] results in a value of Ws + 1 for byte operations and Ws + 2 for word operations.

A data byte read, reads the complete word that contains the byte, using the LSb of any EA to determine which byte to select. The selected byte is placed onto the LSB of the data path. That is, data memory and registers are organized as two parallel, byte-wide entities with shared (word) address decode, but separate write lines. Data byte writes only write to the corresponding side of the array or register that matches the byte address.

All word accesses must be aligned to an even address. Misaligned word data fetches are not supported, so care must be taken when mixing byte and word operations, or translating from 8-bit MCU code. If a misaligned read or write is attempted, an address error trap is generated. If the error occurred on a read, the instruction underway is completed. If the error occurred on a write, the instruction is executed but the write does not occur. In either case, a trap is then executed, allowing the system and/or user application to examine the machine state prior to execution of the address Fault.

All byte loads into any W register are loaded into the LSB; the MSB is not modified.

A Sign-Extend (`SE`) instruction is provided to allow user applications to translate 8-bit signed data to 16-bit signed values. Alternatively, for 16-bit unsigned data, user applications can clear the MSB of any W register by executing a Zero-Extend (`ZE`) instruction on the appropriate address.

© 2018-2019 Microchip Technology Inc.

4.2.3 SFR SPACE

The first 4 Kbytes of the Near Data Space, from 0x0000 to 0x0FFF, is primarily occupied by Special Function Registers (SFRs). These are used by the dsPIC33CK64MP105 family core and peripheral modules for controlling the operation of the device.

SFRs are distributed among the modules that they control and are generally grouped together by module. Much of the SFR space contains unused addresses; these are read as '0'.

Note:	The actual set of peripheral features and interrupts varies by the device. Refer to the corresponding device tables and pinout diagrams for device-specific information.

4.2.4 NEAR DATA SPACE

The 8-Kbyte area, between 0x0000 and 0x1FFF, is referred to as the Near Data Space. Locations in this space are directly addressable through a 13-bit absolute address field within all memory direct instructions. Additionally, the whole Data Space is addressable using `MOV` instructions, which support Memory Direct Addressing mode with a 16-bit address field, or by using Indirect Addressing mode using a Working register as an Address Pointer.

FIGURE 4-5: DATA MEMORY MAP FOR dsPIC33CK64MPX0X AND dsPIC33CK32MPX0X DEVICES

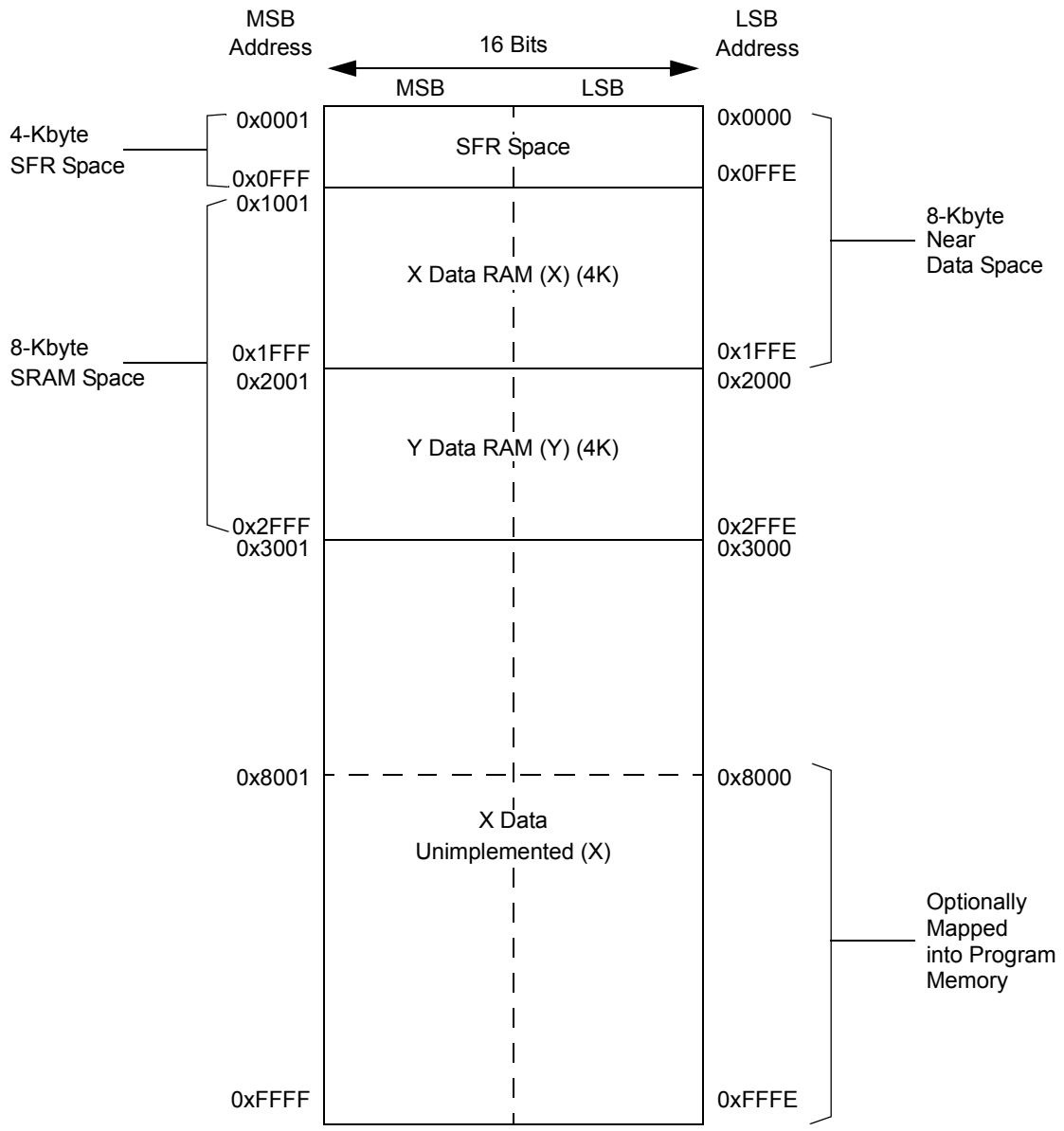

Note: Memory areas are not shown to scale.

© 2018-2019 Microchip Technology Inc.

4.2.5 X AND Y DATA SPACES

The dsPIC33CK64MP105 family core has two Data Spaces: X and Y. These Data Spaces can be considered either separate (for some DSP instructions) or as one unified linear address range (for MCU instructions). The Data Spaces are accessed using two Address Generation Units (AGUs) and separate data paths. This feature allows certain instructions to concurrently fetch two words from RAM, thereby enabling efficient execution of DSP algorithms, such as Finite Impulse Response (FIR) filtering and Fast Fourier Transform (FFT).

The X Data Space is used by all instructions and supports all addressing modes. X Data Space has separate read and write data buses. The X read data bus is the read data path for all instructions that view Data Space as combined X and Y address space. It is also the X data prefetch path for the dual operand DSP instructions (`MAC` class).

The Y Data Space is used in concert with the X Data Space by the `MAC` class of instructions (`CLR`, `ED`, `EDAC`, `MAC`, `MOVSAC`, `MPY`, `MPY.N` and `MSC`) to provide two concurrent data read paths.

Both the X and Y Data Spaces support Modulo Addressing mode for all instructions, subject to addressing mode restrictions. Bit-Reversed Addressing mode is only supported for writes to X Data Space.

All data memory writes, including in DSP instructions, view Data Space as combined X and Y address space. The boundary between the X and Y Data Spaces is device-dependent and is not user-programmable.

4.2.6 DATA MEMORY TEST (BIST)

The dsPIC33CK64MP105 family features a data memory Built-In Self-Test (BIST) that has the option to be run at start-up or run time. The memory test checks that all memory locations are functional and provides a pass/fail status of the RAM that can be used by software to take action if needed. If a failure is reported, the specific location(s) are not identified.

The MBISTCON register (Register 4-1) contains control and status bits for BIST operation. The MBISTDONE bit (MBISTCON[7]) indicates if a BIST was run since the last Reset and the MBISTSTAT bit (MBISTCON[4]) provides the pass/fail result.

4.2.6.1 BIST at Start-up

The BIST can be configured to automatically run on a POR-type Reset, as shown in Figure 4-6. By default, when BISTDIS (FPOR[6]) = `1`, the BIST is disabled and will not be part of device start-up. If the BISTDIS bit is cleared during device programming, the BIST will run after all Configuration registers have been loaded and before code execution begins. BIST will always run on FRC+PLL with PLL settings resulting in a 125 MHz clock rate.

FIGURE 4-6: BIST FLOWCHART

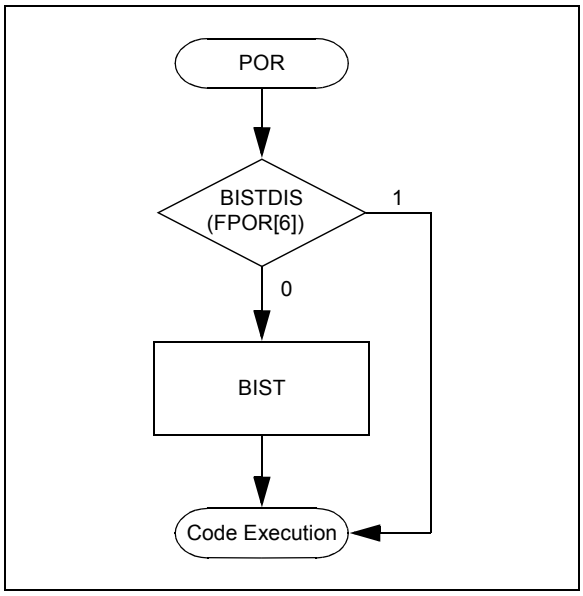

4.2.6.2 BIST at Run Time

A BIST test can be requested to run on subsequent device Resets at any time.

A BIST will corrupt all of the RAM contents, including the Stack Pointer, and requires a subsequent Reset. The system should be prepared for a Reset before a BIST is performed. The BIST is invoked by setting the MBISTEN bit (MBISTCON[0]) and executing a Reset. The MBISTCON register is protected against accidental writes and requires an unlock sequence prior to writing. Only one bit can be set per unlock sequence. The procedure for a run-time BIST is as follows:

1. Execute the unlock sequence by consecutively writing 0x55 and 0xAA to the NVMKEY register.
2. Write 0x0001 to the MBISTCON SFR.
3. Execute a software `RESET` command.
4. Verify a Software Reset has occurred by reading SWR (RCON[6]) (optional).
5. Verify that the MBISTDONE bit is set.
6. Take action depending on test result indicated by MBISTSTAT.

4.2.6.3 Fault Simulation

A mechanism is available to simulate a BIST failure to allow testing of Fault handling software. When the FLTINJ bit is set during a run-time BIST, the MBISTSTAT bit will be set regardless of the test result. The procedure for a BIST Fault simulation is as follows:

1. Execute the unlock sequence by consecutively writing 0x55 and 0xAA to the NVMKEY register.
2. Set the MBISTEN bit (MBISTCON[0]).
3. Execute 2nd unlock sequence by consecutively writing 0x55 and 0xAA to the NVMKEY register.
4. Set the FLTINJ bit (MBISTCON[8]).
5. Execute a software `RESET` command.
6. Verify the MBISTDONE, MBSITSTAT and FLTINJ bits are all set.

REGISTER 4-1: MBISTCON: MBIST CONTROL REGISTER

U-0	U-0	U-0	U-0	U-0	U-0	U-0	R/W-0(1)
—	—	—	—	—	—	—	FLTINJ
bit 15							bit 8

R/W/HS-0(1)	U-0	U-0	R-0	U-0	U-0	U-0	R/W/HC-0(2)
MBISTDONE	—	—	MBISTSTAT	—	—	—	MBISTEN
bit 7							bit 0

Legend:	HS = Hardware Settable bit	HC = Hardware Clearable bit	
R = Readable bit	W = Writable bit	U = Unimplemented bit, read as ‘0’	
-n = Value at POR	‘1’ = Bit is set	‘0’ = Bit is cleared	x = Bit is unknown

bit 15-9 **Unimplemented:** Read as ‘0’

bit 8 **FLTINJ:** MBIST Fault Inject Control bit(1)
- 1 = The MBIST test will complete and sets MBISTSTAT = 1, simulating an SRAM test failure
- 0 = The MBIST test will execute normally

bit 7 **MBISTDONE:** MBIST Done Status bit(1)
- 1 = An MBIST operation has been executed
- 0 = No MBIST operation has occurred on the last Reset sequence

bit 6-5 **Unimplemented:** Read as ‘0’

bit 4 **MBISTSTAT:** MBIST Status bit
- 1 = The last MBIST failed
- 0 = The last MBIST passed; all memory may not have been tested

bit 3-1 **Unimplemented:** Read as ‘0’

bit 0 **MBISTEN:** MBIST Enable bit(2)
- 1 = MBIST test is armed; an MBIST test will execute at the next device Reset
- 0 = MBIST test is disarmed

Note 1: HW resets only on a true POR Reset.
2: This bit will self-clear when the MBIST test is complete.

© 2018-2019 Microchip Technology Inc.

4.3 Memory Resources

Many useful resources are provided on the main product page of the Microchip website for the devices listed in this data sheet. This product page contains the latest updates and additional information.

4.3.1 KEY RESOURCES

- **"dsPIC33E/PIC24E Program Memory"** (www.microchip.com/DS70000613) in the *"dsPIC33/PIC24 Family Reference Manual"*
- Code Samples
- Application Notes
- Software Libraries
- Webinars
- All Related *"dsPIC33/PIC24 Family Reference Manual"* Sections
- Development Tools

4.4 SFR Maps

The following tables show the dsPIC33CK64MP105 family SFR names, addresses and Reset values. These tables contain all registers applicable to the dsPIC33CK64MP105 family. Not all registers are present on all device variants. Refer to Table 1 and Table 2 for peripheral availability. Table 8-1 details port availability for the different package options.

TABLE 4-2: SFR BLOCK 000h

Register	Address	All Resets	Register	Address	All Resets	Register	Address	All Resets
Core			XMODSRT	048	xxxxxxxxxxxxxxx0	**CRC**		
WREG0	000	0000000000000000	XMODEND	04A	xxxxxxxxxxxxxxx1	CRCCONL	0B0	--000000010000--
WREG1	002	0000000000000000	YMODSRT	04C	xxxxxxxxxxxxxxx0	CRCCONH	0B2	---00000---00000
WREG2	004	0000000000000000	YMODEND	04E	xxxxxxxxxxxxxxx1	CRCXORL	0B4	000000000000000-
WREG3	006	0000000000000000	XBREV	050	xxxxxxxxxxxxxxxx	CRCXORH	0B6	0000000000000000
WREG4	008	0000000000000000	DISICNT	052	-xxxxxxxxxxxxx00	CRCDATL	0B8	0000000000000000
WREG5	00A	0000000000000000	TBLPAG	054	--------00000000	CRCDATH	0BA	0000000000000000
WREG6	00C	0000000000000000	YPAG	056	--------00000001	CRCWDATL	0BC	0000000000000000
WREG7	00E	0000000000000000	MSTRPR	058	----------00---0	CRCWDATH	0BE	0000000000000000
WREG8	010	0000000000000000	CTXTSTAT	05A	-----000-----000	**CLC**		
WREG9	012	0000000000000000	DMTCON	05C	----------	CLC1CONL	0C0	--0-00--000--000
WREG10	014	0000000000000000	DMTPRECLR	060	xxxxxxxx--------	CLC1CONH	0C2	----------0000
WREG11	016	0000000000000000	DMTCLR	064	--------xxxxxxxx	CLC1SEL	0C4	0000-000-000-000
WREG12	018	0000000000000000	DMTSTAT	068	--------xxx----x	CLC1GLSL	0C8	0000000000000000
WREG13	01A	0000000000000000	DMTCNTL	06C	xxxxxxxxxxxxxxxx	CLC1GLSH	0CA	0000000000000000
WREG14	01C	0000000000000000	DMTCNTH	06E	xxxxxxxxxxxxxxxx	CLC2CONL	0CC	--0-00--000--000
WREG15	01E	0001000000000000	DMTHOLDREG	070	xxxxxxxxxxxxxxxx	CLC2CONH	0CE	----------0000
SPLIM	020	xxxxxxxxxxxxxxxx	DMTPSCNTL	074	xxxxxxxxxxxxxxxx	CLC2SELL	0D0	0000-000-000-000
ACCAL	022	xxxxxxxxxxxxxxxx	DMTPSCNTH	076	xxxxxxxxxxxxxxxx	CLC2GLSL	0D4	0000000000000000
ACCAH	024	xxxxxxxxxxxxxxxx	DMTPSINTVL	078	xxxxxxxxxxxxxxxx	CLC2GLSH	0D6	0000000000000000
ACCAU	026	xxxxxxxxxxxxxxxx	DMTPSINTVH	07A	xxxxxxxxxxxxxxxx	CLC3CONL	0D8	--0-00--000--000
ACCBL	028	xxxxxxxxxxxxxxxx	**SENT**			CLC3CONH	0DA	----------0000
ACCBH	02A	xxxxxxxxxxxxxxxx	SENT1CON1	080	--0-000000-0-000	CLC3SELL	0DC	0000-000-000-000
ACCBU	02C	xxxxxxxxxxxxxxxx	SENT1CON2	084	0000000000000000	CLC3GLSL	0E0	0000000000000000
PCL	02E	0000000000000000	SENT1CON3	088	0000000000000000	CLC3GLSH	0E2	0000000000000000
PCH	030	--------00000000	SENT1STAT	08C	--------00000000	CLC4CONL	0E4	--0-00--000--000
DSRPAG	032	------0000000001	SENT1SYNC	090	0000000000000000	CLC4CONH	0E6	----------0000
DSWPAG	034	-------000000001	SENT1DATL	094	0000000000000000	CLC4SELL	0E8	0000-000-000-000
RCOUNT	036	xxxxxxxxxxxxxxxx	SENT1DATH	096	0000000000000000	CLC4GLSL	0EC	0000000000000000
DCOUNT	038	xxxxxxxxxxxxxxxx	SENT2CON1	098	--0-000000-0-000	CLC4GLSH	0EE	0000000000000000
DOSTARTL	03A	xxxxxxxxxxxxxxx0	SENT2CON2	09C	0000000000000000	**ECC**		
DOSTARTH	03C	---------xxxxxxx	SENT2CON3	0A0	0000000000000000	ECCCONL	0F0	----------0
DOENDL	03E	xxxxxxxxxxxxxxx0	SENT2STAT	0A4	--------00000000	ECCCONH	0F2	0000000000000000
DOENDH	040	---------xxxxxxx	SENT2SYNC	0A8	0000000000000000	ECCADDRL	0F4	0000000000000000
SR	042	0000000000000000	SENT2DATL	0AC	0000000000000000	ECCADDRH	0F6	0000000000000000
CORCON	044	--xx000000100000	SENT2DATH	0AE	0000000000000000	ECCSTATL	0F8	0000000000000000
MODCON	046	0--0000000000000				ECCSTATH	0FA	------0000000000

Legend: x = unknown or indeterminate value; "-" = unimplemented bits. Address values are in hexadecimal. Reset values are in binary.

TABLE 4-3: SFR BLOCK 100h

Register	Address	All Resets	Register	Address	All Resets	Register	Address	All Resets
Timers			INT1TMRH	15E	0000000000000000	POS2HLD	186	0000000000000000
T1CON	100	--0000000-00-00-	INT1HLDL	160	0000000000000000	VEL2CNT	188	0000000000000000
TMR1	104	0000000000000000	INT1HLDH	162	0000000000000000	VEL2CNTH	18A	0000000000000000
PR1	108	0000000000000000	INDX1CNTL	164	0000000000000000	VEL2HLD	18E	0000000000000000
QEI			INDX1CNTH	166	0000000000000000	INT2TMRL	190	0000000000000000
QEI1CON	140	--000000-0000000	INDX1HLD	16A	0000000000000000	INT2TMRH	192	0000000000000000
QEI1IOC	144	000000000000xxxx	QEI1GECL/ QEI1ICL	16C	0000000000000000	INT2HLDL	194	0000000000000000
QEI1IOCH	146	---------------0	QEI1GECH/ QEI1ICH	16E	0000000000000000	INT2HLDH	196	0000000000000000
QEI1STAT	148	--00000000000000	QEI1LECL	170	0000000000000000	INDX2CNTL	198	0000000000000000
POS1CNTL	14C	0000000000000000	QEI1LECH	172	0000000000000000	INDX2CNTH	19A	0000000000000000
POS1CNTH	14E	0000000000000000	QEI2CON	174	--000000-0000000	INDX2HLD	19E	0000000000000000
POS1HLD	152	0000000000000000	QEI2IOC	178	000000000000xxxx	QEI2GECL/ QEI2ICL	1A0	0000000000000000
VEL1CNT	154	0000000000000000	QEI2IOCH	17A	---------------0	QEI2GECH/ QEI2ICH	1A2	0000000000000000
VEL1CNTH	156	0000000000000000	QEI2STAT	17C	--00000000000000	QEI2LECL	1A4	0000000000000000
VEL1HLD	15A	0000000000000000	POS2CNTL	180	0000000000000000	QEI2LECH	1A6	0000000000000000
INT1TMRL	15C	0000000000000000	POS2CNTH	182	0000000000000000			

Legend: x = unknown or indeterminate value; “-” = unimplemented bits. Address values are in hexadecimal. Reset values are in binary.

© 2018-2019 Microchip Technology Inc.

TABLE 4-4: SFR BLOCK 200h

Register	Address	All Resets	Register	Address	All Resets	Register	Address	All Resets
I2C1 and I2C2			U1SCCON	258	----------00000-	SPI1IMSKH	2C2	--0000000-000000
I2C1CONL	200	--01000000000000	U1SCINT	25A	--00-000--00-000	SPI1URDTL	2C4	0000000000000000
I2C1CONH	202	---------0000000	U1INT	25C	--------00---0--	SPI1URDTH	2C6	0000000000000000
I2C1STAT	204	000--0000000000	U2MODE	260	--000-0000000000	SPI2CON1L	2C8	--00000000000000
I2C1ADD	208	------0000000000	U2MODEH	262	00---00000000000	SPI2CON1H	2CA	0000000000000000
I2C1MSK	20C	------0000000000	U2STA	264	0000000010000000	SPI2CON2L	2CC	-----------00000
I2C1BRG	210	0000000000000000	U2STAH	266	0000-00000101110	SPI2CON2H	2CE	----------
I2C1TRN	214	--------11111111	U2BRG	268	0000000000000000	SPI2STATL	2D0	---00--0001-1-00
I2C1RCV	218	--------00000000	U2BRGH	26A	------------0000	SPI2STATH	2D2	--000000--000000
I2C2CONL	21C	--01000000000000	U2RXREG	26C	--------xxxxxxxx	SPI2BUFL	2D4	0000000000000000
I2C2CONH	21E	---------0000000	U2TXREG	270	--------xxxxxxxx	SPI2BUFH	2D6	0000000000000000
I2C2STAT	220	000--00000000000	U2P1	274	-------000000000	SPI2BRGL	2D8	---xxxxxxxxxxxxx
I2C2ADD	224	------0000000000	U2P2	276	-------000000000	SPI2BRGH	2DA	----------
I2C2MSK	228	------0000000000	U2P3	278	0000000000000000	SPI2IMSKL	2DC	---00--0000-0-00
I2C2BRG	22C	0000000000000000	U2P3H	27A	--------00000000	SPI2IMSKH	2DE	--0000000-000000
I2C2TRN	230	--------11111111	U2TXCHK	27C	--------00000000	SPI2URDTL	2E0	0000000000000000
I2C2RCV	234	--------00000000	U2RXCHK	27E	--------00000000	SPI2URDTH	2E2	0000000000000000
UART1 and UART2			U2SCCON	280	----------00000-	SPI3CON1L	2E4	--00000000000000
U1MODE	238	--000-0000000000	U2SCINT	282	--00-000--00-000	SPI3CON1H	2E6	0000000000000000
U1MODEH	23A	00---00000000000	U2INT	284	--------00---0--	SPI3CON2L	2E8	-----------00000
U1STA	23C	0000000010000000	**SPI**			SPI3CON2H	2EA	----------
U1STAH	23E	0000-00000101110	SPI1CON1L	2AC	--00000000000000	SPI3STATL	2EC	---00--0001-1-00
U1BRG	240	0000000000000000	SPI1CON1H	2AE	0000000000000000	SPI3STATH	2EE	--000000--000000
U1BRGH	242	------------0000	SPI1CON2L	2B0	-----------00000	SPI3BUFL	2F0	0000000000000000
U1RXREG	244	--------xxxxxxxx	SPI1CON2H	2B2	----------	SPI3BUFH	2F2	0000000000000000
U1TXREG	248	--------xxxxxxxx	SPI1STATL	2B4	---00--0001-1-00	SPI3BRGL	2F4	---xxxxxxxxxxxxx
U1P1	24C	-------000000000	SPI1STATH	2B6	--000000--000000	SPI3BRGH	2F6	----------
U1P2	24E	-------000000000	SPI1BUFL	2B8	0000000000000000	SPI3IMSKL	2F8	---00--0000-0-00
U1P3	250	0000000000000000	SPI1BUFH	2BA	0000000000000000	SPI3IMSKH	2FA	--0000000-000000
U1P3H	252	--------00000000	SPI1BRGL	2BC	---xxxxxxxxxxxxx	SPI3URDTL	2FC	0000000000000000
U1TXCHK	254	--------00000000	SPI1BRGH	2BE	----------	SPI3URDTH	2F3	0000000000000000
U1RXCHK	256	--------00000000	SPI1IMSKL	2C0	---00--0000-0-00			

Legend: x = unknown or indeterminate value; "-" = unimplemented bits. Address values are in hexadecimal. Reset values are in binary.

TABLE 4-5: SFR BLOCK 300h-400h

Register	Address	All Resets	Register	Address	All Resets	Register	Address	All Resets
High-Speed PWM			PG1TRIGB	356	0000000000000000	PG3FFPCIH	3AE	0000-00000000000
PCLKCON	300	00-----0--00--00	PG1TRIGC	358	0000000000000000	PG3SPCIL	3B0	0000000000000000
FSCL	302	0000000000000000	PG1DTL	35A	--00000000000000	PG3SPCIH	3B2	0000-00000000000
FSMINPER	304	0000000000000000	PG1DTH	35C	--00000000000000	PG3LEBL	3B4	0000000000000000
MPHASE	306	0000000000000000	PG1CAP	35E	0000000000000000	PG3LEBH	3B6	-----000----0000
MDC	308	0000000000000000	PG2CONL	360	-----0000--00000	PG3PHASE	3B8	0000000000000000
MPER	30A	0000000000000000	PG2CONH	362	000-000000--0000	PG3DC	3BA	0000000000000000
LFSR	30C	0000000000000000	PG2STAT	364	0000000000000000	PG3DCA	3BC	--------00000000
CMBTRIGL	30E	--------00000000	PG2IOCONL	366	0000000000000000	PG3PER	3BE	0000000000000000
CMBTRIGH	310	--------00000000	PG2IOCONH	368	0000---0--000000	PG3TRIGA	3C0	0000000000000000
LOGCONA	312	000000000000-000	PG2EVTL	36A	00000000---00000	PG3TRIGB	3C2	0000000000000000
LOGCONB	314	000000000000-000	PG2EVTH	36C	0000--0000000000	PG3TRIGC	3C4	0000000000000000
LOGCONC	316	000000000000-000	PG2FPCIL	36E	0000000000000000	PG3DTL	3C6	--00000000000000
LOGCOND	318	000000000000-000	PG2FPCIH	370	0000-00000000000	PG3DTH	3C8	--00000000000000
LOGCONE	31A	000000000000-000	PG2CLPCIL	372	0000000000000000	PG3CAP	3CA	0000000000000000
LOGCONF	31C	000000000000-000	PG2CLPCIH	374	0000-00000000000	PG4CONL	3CC	-----0000--00000
PWMEVTA	31E	0000----0000-000	PG2FFPCIL	376	0000000000000000	PG4CONH	3CE	000-000000--0000
PWMEVTB	320	0000----0000-000	PG2FFPCIH	378	0000-00000000000	PG4STAT	3D0	0000000000000000
PWMEVTC	322	0000----0000-000	PG2SPCIL	37A	0000000000000000	PG4IOCONL	3D2	0000000000000000
PWMEVTD	324	0000----0000-000	PG2SPCIH	37C	0000-00000000000	PG4IOCONH	3D4	0000---0--000000
PWMEVTE	326	0000----0000-000	PG2LEBL	37E	0000000000000000	PG4EVTL	3D6	00000000---00000
PWMEVTF	328	0000----0000-000	PG2LEBH	380	-----000----0000	PG4EVTH	3D8	0000--0000000000
PG1CONL	32A	-----0000--00000	PG2PHASE	382	0000000000000000	PG4FPCIL	3DA	0000000000000000
PG1CONH	32C	000-000000--0000	PG2DC	384	0000000000000000	PG4FPCIH	3DC	0000-00000000000
PG1STAT	32E	0000000000000000	PG2DCA	386	--------00000000	PG4CLPCIL	3DE	0000000000000000
PG1IOCONL	330	0000000000000000	PG2PER	388	0000000000000000	PG4CLPCIH	3E0	0000-00000000000
PG1IOCONH	332	0000---0--000000	PG2TRIGA	38A	0000000000000000	PG4FFPCIL	3E2	0000000000000000
PG1EVTL	334	00000000---00000	PG2TRIGB	38C	0000000000000000	PG4FFPCIH	3E4	0000-00000000000
PG1EVTH	336	0000--0000000000	PG2TRIGC	38E	0000000000000000	PG4SPCIL	3E6	0000000000000000
PG1FPCIL	338	0000000000000000	PG2DTL	390	--00000000000000	PG4SPCIH	3E8	0000-00000000000
PG1FPCIH	33A	0000-00000000000	PG2DTH	392	--00000000000000	PG4LEBL	3EA	0000000000000000
PG1CLPCIL	33C	0000000000000000	PG2CAP	394	0000000000000000	PG4LEBH	3EC	-----000----0000
PG1CLPCIH	33E	0000-00000000000	PG3CONL	396	-----0000--00000	PG4PHASE	3EE	0000000000000000
PG1FFPCIL	340	0000000000000000	PG3CONH	398	000-000000--0000	PG4DC	3F0	0000000000000000
PG1FFPCIH	342	0000-00000000000	PG3STAT	39A	0000000000000000	PG4DCA	3F2	--------00000000
PG1SPCIL	344	0000000000000000	PG3IOCONL	39C	0000000000000000	PG4PER	3F4	0000000000000000
PG1SPCIH	346	0000-00000000000	PG3IOCONH	39E	0000---0--000000	PG4TRIGA	3F6	0000000000000000
PG1LEBL	348	0000000000000000	PG3EVTL	3A0	00000000---00000	PG4TRIGB	3F8	0000000000000000
PG1LEBH	34A	-----000----0000	PG3EVTH	3A2	0000--0000000000	PG4TRIGC	3FA	0000000000000000
PG1PHASE	34C	0000000000000000	PG3FPCIL	3A4	0000000000000000	PG4DTL	3FC	--00000000000000
PG1DC	34E	0000000000000000	PG3FPCIH	3A6	0000-00000000000	PG4DTH	3FE	--00000000000000
PG1DCA	350	--------00000000	PG3CLPCIL	3A8	0000000000000000	PG4CAP	400	0000000000000000
PG1PER	352	0000000000000000	PG3CLPCIH	3AA	0000-00000000000			
PG1TRIGA	354	0000000000000000	PG3FFPCIL	3AC	0000000000000000			

Legend: x = unknown or indeterminate value; "-" = unimplemented bits. Address values are in hexadecimal. Reset values are in binary.

© 2018-2019 Microchip Technology Inc.

TABLE 4-6: SFR BLOCK 800h

Register	Address	All Resets	Register	Address	All Resets	Register	Address	All Resets
Interrupts			IPC4	848	-100-100-100-100	IPC32	880	----------100
IFS0	800	0000000000-00000	IPC5	84A	-100---------100	IPC42	894	-100-100-100----
IFS1	802	-00000-00-000000	IPC6	84C	-100-100-----100	IPC43	896	-100-100-100-100
IFS2	804	--000-00-0000---	IPC7	84E	-----100-100-100	IPC44	898	-100-100-100-100
IFS3	806	0--00000-0--0000	IPC8	850	-100----------	IPC45	89A	----------100
IFS4	808	000-0----0000-00	IPC9	852	-----100-100-100	IPC47	89E	-100-100-100----
IFS5	80A	000000000000000-	IPC10	854	-100-----100-100	INTCON1	8C0	0000000000-0000-
IFS6	80C	0000000000000000	IPC11	856	---------100-100	INTCON2	8C2	000----0----0000
IFS7	80E	000000000000----	IPC12	858	-100-100-100-100	INTCON3	8C4	------00---0---0
IFS8	810	----------0	IPC13	85A	-----100--------	INTCON4	8C6	----------00
IFS10	814	0000000---------	IPC14	85C	-100-100-100-100	INTTREG	8C8	000-0000-0000000
IFS11	816	000--------00000	IPC15	85E	-100---------100	**Flash**		
IEC0	820	0000000000-00000	IPC16	860	-100-----100-100	NVMCON	8D0	0000-000----0000
IEC1	822	-00000-00-000000	IPC17	862	-----100-100-100	NVMADR	8D2	0000000000000000
IEC2	824	--000-00-0000---	IPC18	864	-100----------	NVMADRU	8D4	--------00000000
IEC3	826	0--00000-0--0000	IPC19	866	-100-100-100----	NVMKEY	8D6	--------00000000
IEC4	828	000-0----0000-00	IPC20	868	-100-100-100----	NVMSRCADRL	8D8	0000000000000000
IEC5	82A	000000000000000-	IPC21	86A	-100-100-100-100	NVMSRCADRH	8DA	--------00000000
IEC6	82C	0000000000000000	IPC22	86C	-100-100-100-100	**CBG**		
IEC7	82E	000000000000----	IPC23	86E	-100-100-100-100	AMPCON1L	8DC	----------000
IEC8	830	----------0	IPC24	870	-100-100-100-100	AMPCON1H	8DE	----------000
IEC10	834	0000000---------	IPC25	872	-100-100-100-100	BIASCON	8F0	----------0000
IEC11	836	000--------00000	IPC26	874	-100-100-100-100	IBIASCONL	8F4	--000000--000000
IPC0	840	-100-100-100-100	IPC27	876	-100-100-100-100	IBIASCONH	8F6	--000000--000000
IPC1	842	-100-100-----100	IPC29	87A	-100-100-100-100			
IPC2	844	-100-100-100-100	IPC30	87C	-100-100-100-100			
IPC3	846	-100-100-100-100	IPC31	87E	-100-100-100-100			

Legend: x = unknown or indeterminate value; "-" = unimplemented bits. Address values are in hexadecimal. Reset values are in binary.

TABLE 4-7: SFR BLOCK 900h

Register	Address	All Resets	Register	Address	All Resets	Register	Address	All Resets
PTG			CCP1CON3H	95A	0000------0-00--	CCP3PRL	9AC	1111111111111111
PTGCST	900	--00-00000x---00	CCP1STATL	95C	-----0--00xx0000	CCP3PRH	9AE	1111111111111111
PTGCON	902	000000000000-000	CCP1STATH	95E	----------00000	CCP3RA	9B0	0000000000000000
PTGBTE	904	xxxxxxxxxxxxxxxx	CCP1TMRL	960	0000000000000000	CCP3RB	9B4	0000000000000000
PTGBTEH	906	0000000000000000	CCP1TMRH	962	0000000000000000	CCP3BUFL	9B8	0000000000000000
PTGHOLD	908	0000000000000000	CCP1PRL	964	1111111111111111	CCP3BUFH	9BA	0000000000000000
PTGT0LIM	90C	0000000000000000	CCP1PRH	966	1111111111111111	CCP4CON1L	9BC	--00000000000000
PTGT1LIM	910	0000000000000000	CCP1RA	968	0000000000000000	CCP4CON1H	9BE	00--000000000000
PTGSDLIM	914	0000000000000000	CCP1RB	96C	0000000000000000	CCP4CON2L	9C0	00-0----00000000
PTGC0LIM	918	0000000000000000	CCP1BUFL	970	0000000000000000	CCP4CON2H	9C2	-------100-00000
PTGC1LIM	91C	0000000000000000	CCP1BUFH	972	0000000000000000	CCP4CON3H	9C6	0000------0-00--
PTGADJ	920	0000000000000000	CCP2CON1L	974	--00000000000000	CCP4STATL	9C8	-----0--00xx0000
PTGL0	924	0000000000000000	CCP2CON1H	976	00--000000000000	CCP4STATH	9CA	----------00000
PTGQPTR	928	----------00000	CCP2CON2L	978	00-0----00000000	CCP4TMRL	9CC	0000000000000000
PTGQUE0	930	xxxxxxxxxxxxxxxx	CCP2CON2H	97A	0------100-00000	CCP4TMRH	9CE	0000000000000000
PTGQUE1	932	xxxxxxxxxxxxxxxx	CCP2CON3H	97E	0000------0-00--	CCP4PRL	9D0	1111111111111111
PTGQUE2	934	xxxxxxxxxxxxxxxx	CCP2STATL	980	-----0--00xx0000	CCP4PRH	9D2	1111111111111111
PTGQUE3	936	xxxxxxxxxxxxxxxx	CCP2STATH	982	----------00000	CCP4RA	9D4	0000000000000000
PTGQUE4	938	xxxxxxxxxxxxxxxx	CCP2TMRL	984	0000000000000000	CCP4RB	9D8	0000000000000000
PTGQUE5	93A	xxxxxxxxxxxxxxxx	CCP2TMRH	986	0000000000000000	CCP4BUFL	9DC	0000000000000000
PTGQUE6	93C	xxxxxxxxxxxxxxxx	CCP2PRL	988	1111111111111111	CCP4BUFH	9DE	0000000000000000
PTGQUE7	93E	xxxxxxxxxxxxxxxx	CCP2PRH	98A	1111111111111111	CCP5CON1L	9E0	--00000000000000
PTGQUE8	940	xxxxxxxxxxxxxxxx	CCP2RA	98C	0000000000000000	CCP5CON1H	9E2	00--000000000000
PTGQUE9	942	xxxxxxxxxxxxxxxx	CCP2RB	990	0000000000000000	CCP5CON2L	9E4	00-0----00000000
PTGQUE10	944	xxxxxxxxxxxxxxxx	CCP2BUFL	994	0000000000000000	CCP5CON2H	9E6	-------100-00000
PTGQUE11	946	xxxxxxxxxxxxxxxx	CCP2BUFH	996	0000000000000000	CCP5CON3H	9EA	0000------0-00--
PTGQUE12	948	xxxxxxxxxxxxxxxx	CCP3CON1L	998	--00000000000000	CCP5STATL	9EC	-----0--00xx0000
PTGQUE13	94A	xxxxxxxxxxxxxxxx	CCP3CON1H	99A	00--000000000000	CCP5STATH	9EE	----------00000
PTGQUE14	94C	xxxxxxxxxxxxxxxx	CCP3CON2L	99C	00-0----00000000	CCP5TMRL	9F0	0000000000000000
PTGQUE15	94E	xxxxxxxxxxxxxxxx	CCP3CON2H	99E	-------100-00000	CCP5TMRH	9F2	0000000000000000
CCP			CCP3CON3H	9A2	0000------0-00--	CCP5PRL	9F4	1111111111111111
CCP1CON1L	950	--00000000000000	CCP3STATL	9A4	-----0--00xx0000	CCP5PRH	9F6	1111111111111111
CCP1CON1H	952	00--000000000000	CCP3STATH	9A6	----------00000	CCP5RA	9F8	0000000000000000
CCP1CON2L	954	00-0----00000000	CCP3TMRL	9A8	0000000000000000	CCP5RB	9FC	0000000000000000
CCP1CON2H	956	-------100-00000	CCP3TMRH	9AA	0000000000000000			

Legend: x = unknown or indeterminate value; "-" = unimplemented bits. Address values are in hexadecimal. Reset values are in binary.

© 2018-2019 Microchip Technology Inc.

TABLE 4-8: SFR BLOCK A00h

Register	Address	All Resets	Register	Address	All Resets	Register	Address	All Resets
CCP (Continued)			DMASRC0	AC8	0000000000000000	DMASRC2	ADC	0000000000000000
CCP5BUFL	A00	0000000000000000	DMADST0	ACA	0000000000000000	DMADST2	ADE	0000000000000000
CCP5BUFH	A02	0000000000000000	DMACNT0	ACC	0000000000000001	DMACNT2	AE0	0000000000000001
DMA			DMACH1	ACE	-----00000000000	DMACH3	AE2	-----00000000000
DMACON	ABC	--0----------0	DMAINT1	AD0	--00000000000--0	DMAINT3	AE4	--00000000000--0
DMABUF	ABE	0000000000000000	DMASRC1	AD2	0000000000000000	DMASRC3	AE6	0000000000000000
DMAL	AC0	0000000000000000	DMADST1	AD4	0000000000000000	DMADST3	AE8	0000000000000000
DMAH	AC2	0000000000000000	DMACNT1	AD6	0000000000000001	DMACNT3	AEA	0000000000000001
DMACH0	AC4	-----00000000000	DMACH2	AD8	-----00000000000			
DMAINT0	AC6	--00000000000--0	DMAINT2	ADA	--00000000000--0			

Legend: x = unknown or indeterminate value; “-” = unimplemented bits. Address values are in hexadecimal. Reset values are in binary.

TABLE 4-9: SFR BLOCK B00h

Register	Address	All Resets	Register	Address	All Resets	Register	Address	All Resets
ADC			ADCMP1LO	B44	0000000000000000	ADTRIG2H	B8A	0000000000000000
ADCON1L	B00	000-00000----000	ADCMP1HI	B46	0000000000000000	ADTRIG3L	B8C	0000000000000000
ADCON1H	B02	--------011-----	ADCMP2ENL	B48	0000000000000000	ADTRIG3H	B8E	0000000000000000
ADCON2L	B04	00-0000000000000	ADCMP2ENH	B4A	------0000000000	ADTRIG4L	B90	0000000000000000
ADCON2H	B06	00-0000000000000	ADCMP2LO	B4C	0000000000000000	ADTRIG4H	B92	0000000000000000
ADCON3L	B08	0000000000000000	ADCMP2HI	B4E	0000000000000000	ADTRIG5L	B94	0000000000000000
ADCON3H	B0A	000000000-----xx	ADCMP3ENL	B50	0000000000000000	ADTRIG5H	B96	0000000000000000
ADCON4L	B0C	------000-----xx	ADCMP3ENH	B52	------0000000000	ADTRIG6L	B98	0000000000000000
ADCON4H	B0E	00----------0000	ADCMP3LO	B54	0000000000000000	ADCMP0CON	BA0	0000000000000000
ADMOD0L	B10	0000000000000000	ADCMP3HI	B56	0000000000000000	ADCMP1CON	BA4	0000000000000000
ADMOD0H	B12	0000000000000000	ADFL0DAT	B68	0000000000000000	ADCMP2CON	BA8	0000000000000000
ADMOD1L	B14	0000000000000000	ADFL0CON	B6A	xxx0000000000000	ADCMP3CON	BAC	0000000000000000
ADMOD1H	B16	----------0000	ADFL1DAT	B6C	0000000000000000	ADLVLTRGL	BD0	0000000000000000
ADIEL	B20	xxxxxxxxxxxxxxxx	ADFL1CON	B6E	xxx0000000000000	ADLVLTRGH	BD2	------xxxxxxxxxx
ADIEH	B22	------xxxxxxxxxx	ADFL2DAT	B70	0000000000000000	ADCORE0L	BD4	0000000000000000
ADSTATL	B30	0000000000000000	ADFL2CON	B72	xxx0000000000000	ADCORE0H	BD6	0000001100000000
ADSTATH	B32	------0000000000	ADFL3DAT	B74	0000000000000000	ADCORE1L	BD8	0000000000000000
ADCMP0ENL	B38	0000000000000000	ADFL3CON	B76	xxx0000000000000	ADCORE1H	BDA	0000001100000000
ADCMP0ENH	B3A	------0000000000	ADTRIG0L	B80	0000000000000000	ADEIEL	BF0	xxxxxxxxxxxxxxxx
ADCMP0LO	B3C	0000000000000000	ADTRIG0H	B82	0000000000000000	ADEIEH	BF2	------xxxxxxxxxx
ADCMP0HI	B3E	0000000000000000	ADTRIG1L	B84	0000000000000000	ADEISTATL	BF8	xxxxxxxxxxxxxxxx
ADCMP1ENL	B40	0000000000000000	ADTRIG1H	B86	0000000000000000	ADEISTATH	BFA	------xxxxxxxxxx
ADCMP1ENH	B42	------0000000000	ADTRIG2L	B88	0000000000000000			

Legend: x = unknown or indeterminate value; “-” = unimplemented bits. Address values are in hexadecimal. Reset values are in binary.

TABLE 4-10: SFR BLOCK C00h

Register	Address	All Resets	Register	Address	All Resets	Register	Address	All Resets
ADC (Continued)			ADCBUF14	C28	0000000000000000	SLP1DAT	C94	0000000000000000
ADCON5L	C00	--------0-------	ADCBUF15	C2A	0000000000000000	DAC2CONL	C98	000--000x0000000
ADCON5H	C02	----xxxx0-------	ADCBUF16	C2C	0000000000000000	DAC2CONH	C9A	------0000000000
ADCBUF0	C0C	0000000000000000	ADCBUF17	C2E	0000000000000000	DAC2DATL	C9C	0000000000000000
ADCBUF1	C0E	0000000000000000	ADCBUF18	C30	0000000000000000	DAC2DATH	C9E	0000000000000000
ADCBUF2	C10	0000000000000000	ADCBUF19	C32	0000000000000000	SLP2CONL	CA0	0000000000000000
ADCBUF3	C12	0000000000000000	ADCBUF20	C34	0000000000000000	SLP2CONH	CA2	----000---------
ADCBUF4	C14	0000000000000000	**DAC**			SLP2DAT	CA4	0000000000000000
ADCBUF5	C16	0000000000000000	DACCTRL1L	C80	--0-----0000-000	DAC3CONL	CA8	000--000x0000000
ADCBUF6	C18	0000000000000000	DACCTRL2L	C84	------0001010101	DAC3CONH	CAA	------0000000000
ADCBUF7	C1A	0000000000000000	DACCTRL2H	C86	------0010001010	DAC3DATL	CAC	0000000000000000
ADCBUF8	C1C	0000000000000000	DAC1CONL	C88	000--000x0000000	DAC3DATH	CAE	0000000000000000
ADCBUF9	C1E	0000000000000000	DAC1CONH	C8A	------0000000000	SLP3CONL	CB0	0000000000000000
ADCBUF10	C20	0000000000000000	DAC1DATL	C8C	0000000000000000	SLP3CONH	CB2	----000---------
ADCBUF11	C22	0000000000000000	DAC1DATH	C8E	0000000000000000	SLP3DAT	CB4	0000000000000000
ADCBUF12	C24	0000000000000000	SLP1CONL	C90	0000000000000000	VREGCON	CFC	0---------000000
ADCBUF13	C26	0000000000000000	SLP1CONH	C92	----000---------			

Legend: x = unknown or indeterminate value; “-” = unimplemented bits. Address values are in hexadecimal. Reset values are in binary.

© 2018-2019 Microchip Technology Inc.

TABLE 4-11: SFR BLOCK D00h

Register	Address	All Resets	Register	Address	All Resets	Register	Address	All Resets
PPS			RPINR21	D2E	0000000000000000	RPOR4	D88	--000000--000000
RPCON	D00	----0----------	RPINR22	D30	0000000000000000	RPOR5	D8A	--000000--000000
RPINR0	D04	00000000--------	RPINR23	D32	--------00000000	RPOR6	D8C	--000000--000000
RPINR1	D06	0000000000000000	RPINR27	D3A	0000000000000000	RPOR7	D8E	--000000--000000
RPINR2	D08	00000000--------	RPINR29	D3E	0000000000000000	RPOR8	D90	--000000--000000
RPINR3	D0A	0000000000000000	RPINR30	D40	--------00000000	RPOR9	D92	--000000--000000
RPINR4	D0C	0000000000000000	RPINR37	D4E	0000000000000000	RPOR10	D94	--000000--000000
RPINR5	D0E	0000000000000000	RPINR38	D50	--------00000000	RPOR11	D96	--000000--000000
RPINR6	D10	0000000000000000	RPINR42	D58	0000000000000000	RPOR12	D98	--000000--000000
RPINR7	D12	0000000000000000	RPINR43	D5A	0000000000000000	RPOR13	D9A	--000000--000000
RPINR11	D1A	0000000000000000	RPINR44	D5C	0000000000000000	RPOR14	D9C	--000000--000000
RPINR12	D1C	0000000000000000	RPINR45	D5E	0000000000000000	RPOR16	DA0	--000000--------
RPINR13	D1E	0000000000000000	RPINR46	D60	0000000000000000	RPOR20	DA8	----------000000
RPINR14	D20	0000000000000000	RPINR47	D62	0000000000000000	RPOR21	DAA	----------000000
RPINR15	D22	0000000000000000	RPINR48	D64	0000000000000000	RPOR22	DAC	--000000--------
RPINR16	D24	0000000000000000	RPINR49	D66	0000000000000000	RPOR24	DB0	--000000--000000
RPINR17	D26	0000000000000000	RPOR0	D80	--000000--000000	RPOR25	DB2	--000000--000000
RPINR18	D28	0000000000000000	RPOR1	D82	--000000--000000	RPOR26	DB4	--000000--000000
RPINR19	D2A	0000000000000000	RPOR2	D84	--000000--000000			
RPINR20	D2C	0000000000000000	RPOR3	D86	--000000--000000			

Legend: x = unknown or indeterminate value; "-" = unimplemented bits. Address values are in hexadecimal. Reset values are in binary.

TABLE 4-12: SFR BLOCK E00h

Register	Address	All Resets	Register	Address	All Resets	Register	Address	All Resets
I/O Ports			ODCB	E24	0000000000000000	CNSTATC	E4A	0000000000000000
ANSELA	E00	----------11111	CNPUB	E26	0000000000000000	CNEN1C	E4C	0000000000000000
TRISA	E02	----------11111	CNPDB	E28	0000000000000000	CNFC	E4E	0000000000000000
PORTA	E04	----------xxxxx	CNCONB	E2A	----0----------	ANSELD	E54	--1-11----------
LATA	E06	----------xxxxx	CNEN0B	E2C	0000000000000000	TRISD	E56	1111111111111111
ODCA	E08	----------00000	CNSTATB	E2E	0000000000000000	PORTD	E58	xxxxxxxxxxxxxxxx
CNPUA	E0A	----------00000	CNEN1B	E30	0000000000000000	LATD	E5A	xxxxxxxxxxxxxxxx
CNPDA	E0C	----------00000	CNFB	E32	0000000000000000	ODCD	E5C	0000000000000000
CNCONA	E0E	----0----------	ANSELC	E38	--------11--1111	CNPUD	E5E	0000000000000000
CNEN0A	E10	----------00000	TRISC	E3A	1111111111111111	CNPDD	E60	0000000000000000
CNSTATA	E12	----------00000	PORTC	E3C	xxxxxxxxxxxxxxxx	CNCOND	E62	----0----------
CNEN1A	E14	----------00000	LATC	E3E	xxxxxxxxxxxxxxxx	CNEN0D	E64	0000000000000000
CNFA	E16	----------00000	ODCC	E40	0000000000000000	CNSTATD	E66	0000000000000000
ANSELB	E1C	------111--11111	CNPUC	E42	0000000000000000	CNEN1D	E68	0000000000000000
TRISB	E1E	1111111111111111	CNPDC	E44	0000000000000000	CNFD	E6A	0000000000000000
PORTB	E20	xxxxxxxxxxxxxxxx	CNCONC	E46	----0----------	**Memory BIST**		
LATB	E22	xxxxxxxxxxxxxxxx	CNEN0C	E48	0000000000000000	MBISTCON	EFC	-------00--0---1

Legend: x = unknown or indeterminate value; "-" = unimplemented bits. Address values are in hexadecimal. Reset values are in binary.

TABLE 4-13: SFR BLOCK F00h

Register	Address	All Resets	Register	Address	All Resets	Register	Address	All Resets
UART3			U3INT	F24	--------00---0--	PMD3	FA8	-------00-0-000-
U3MODE	F00	--000-0000000000	**Reset and Oscillator**			PMD4	FAA	----------0---
U3MODEH	F02	00---00000000000	RCON	F80	xx----x01x0xxxxx	PMD6	FAE	----0000--------
U3STA	F04	0000000010000000	OSCCON	F84	0000-yyy0-0-0--0	PMD7	FB0	-----000----0---
U3STAH	F06	0000-00000101110	CLKDIV	F86	00110000--000001	PMD8	FB2	--000--0--00000-
U3BRG	F08	0000000000000000	PLLFBD	F88	----000010010110	**WDT**		
U3BRGH	F0A	----------0000	PLLDIV	F8A	------00-011-001	WDTCONL	FB4	---0000000000000
U3RXREG	F0C	--------xxxxxxxx	OSCTUN	F8C	----------000000	WDTCONH	FB6	0000000000000000
U3TXREG	F10	--------xxxxxxxx	ACLKCON1	F8E	00-----0--000001	**Reference Clock Output**		
U3P1	F14	-------000000000	APLLFBD1	F90	----000010010110	REFOCONL	FB8	--000-00----0000
U3P2	F16	-------000000000	APLLDIV1	F92	------00-011-001	REFOCONH	FBA	0000000000000000
U3P3	F18	0000000000000000	CANCLKCON	F9A	----xxxx-xxxxxxx	REFOTRIM	FBE	000000000-------
U3P3H	F1A	--------00000000	DCOTUN	F9C	--000000--000000	**Programmer/Debugger**		
U3TXCHK	F1C	--------00000000	DCOCON	F9E	--0-xxxx--------	VISI	FCC	xxxxxxxxxxxxxxxx
U3RXCHK	F1E	--------00000000	**PMD**			APPO	FD2	xxxxxxxxxxxxxxxx
U3SCCON	F20	----------00000-	PMD1	FA4	----000-00000-00	APPI	FD4	xxxxxxxxxxxxxxxx
U3SCINT	F22	--00-000--00-000	PMD2	FA6	-------000000000	APPS	FD6	----------xxxxx

Legend: x = unknown or indeterminate value; "-" =unimplemented bits; y = value set by Configuration bits. Address values are in hexadecimal. Reset values are in binary.

© 2018-2019 Microchip Technology Inc.

4.4.1 PAGED MEMORY SCHEME

The dsPIC33CK64MP105 architecture extends the available Data Space through a paging scheme, which allows the available Data Space to be accessed using `MOV` instructions in a linear fashion for pre- and post-modified Effective Addresses (EAs). The upper half of the base Data Space address is used in conjunction with the Data Space Read Page (DSRPAG) register to form the Program Space Visibility (PSV) address.

The Data Space Read Page (DSRPAG) register is located in the SFR space. Construction of the PSV address is shown in Figure 4-7. When DSRPAG[9] = `1` and the base address bit, EA[15] = `1`, the DSRPAG[8:0] bits are concatenated onto EA[14:0] to form the 24-bit PSV read address.

The paged memory scheme provides access to multiple 32-Kbyte windows in the PSV memory. The Data Space Read Page (DSRPAG) register, in combination with the upper half of the Data Space address, can provide up to 8 Mbytes of PSV address space. The paged data memory space is shown in Figure 4-8.

The Program Space (PS) can be accessed with a DSRPAG of 0x200 or greater. Only reads from PS are supported using the DSRPAG.

FIGURE 4-7: PROGRAM SPACE VISIBILITY (PSV) READ ADDRESS GENERATION

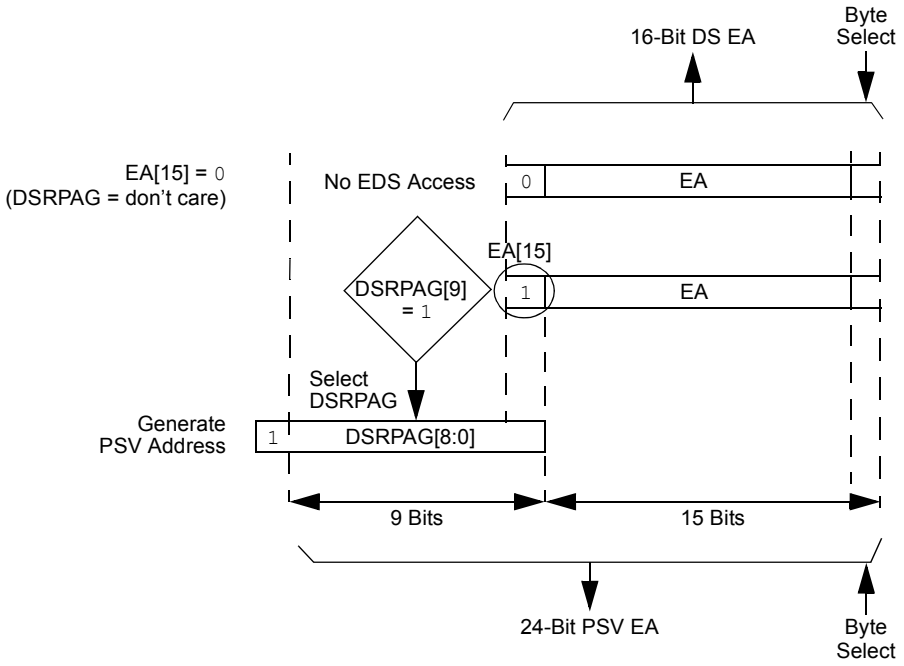

Note: DS read access when DSRPAG = 0x000 will force an address error trap.

FIGURE 4-8: PAGED DATA MEMORY SPACE

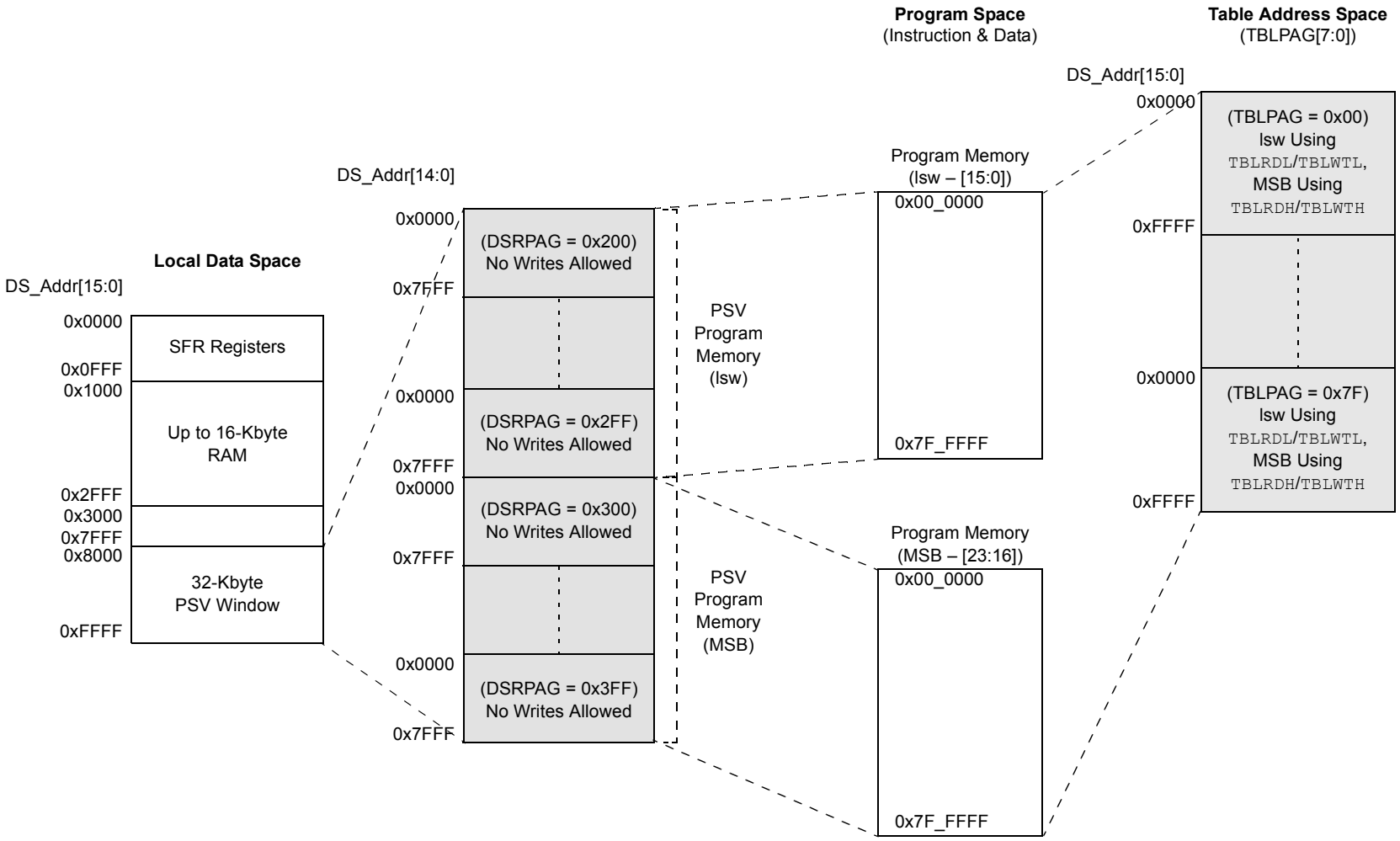

© 2018-2019 Microchip Technology Inc.

When a PSV page overflow or underflow occurs, EA[15] is cleared as a result of the register indirect EA calculation. An overflow or underflow of the EA in the PSV pages can occur at the page boundaries when:

- The initial address, prior to modification, addresses the PSV page
- The EA calculation uses Pre- or Post-Modified Register Indirect Addressing; however, this does not include Register Offset Addressing

In general, when an overflow is detected, the DSRPAG register is incremented and the EA[15] bit is set to keep the base address within the PSV window. When an underflow is detected, the DSRPAG register is decremented and the EA[15] bit is set to keep the base address within the PSV window. This creates a linear PSV address space, but only when using Register Indirect Addressing modes.

Exceptions to the operation described above arise when entering and exiting the boundaries of Page 0 and PSV spaces. Table 4-14 lists the effects of overflow and underflow scenarios at different boundaries.

In the following cases, when overflow or underflow occurs, the EA[15] bit is set and the DSRPAG is not modified; therefore, the EA will wrap to the beginning of the current page:

- Register Indirect with Register Offset Addressing
- Modulo Addressing
- Bit-Reversed Addressing

TABLE 4-14: OVERFLOW AND UNDERFLOW SCENARIOS AT PAGE 0 AND PSV SPACE BOUNDARIES(2,3,4)

O/U, R/W	Operation	Before			After		
		DSRPAG	DS EA[15]	Page Description	DSRPAG	DS EA[15]	Page Description
O, Read	[++Wn] or [Wn++]	DSRPAG = 0x2FF	1	PSV: Last lsw page	DSRPAG = 0x300	1	PSV: First MSB page
O, Read		DSRPAG = 0x3FF	1	PSV: Last MSB page	DSRPAG = 0x3FF	0	See **Note 1**
U, Read	[--Wn] or [Wn--]	DSRPAG = 0x001	1	PSV page	DSRPAG = 0x001	0	See **Note 1**
U, Read		DSRPAG = 0x200	1	PSV: First lsw page	DSRPAG = 0x200	0	See **Note 1**
U, Read		DSRPAG = 0x300	1	PSV: First MSB page	DSRPAG = 0x2FF	1	PSV: Last lsw page

Legend: O = Overflow, U = Underflow, R = Read, W = Write

Note 1: The Register Indirect Addressing now addresses a location in the base Data Space (0x0000-0x8000).

2: An EDS access, with DSRPAG = 0x000, will generate an address error trap.

3: Only reads from PS are supported using DSRPAG.

4: Pseudolinear Addressing is not supported for large offsets.

4.4.1.1 Extended X Data Space

The lower portion of the base address space range, between 0x0000 and 0x7FFF, is always accessible, regardless of the contents of the Data Space Read Page register. It is indirectly addressable through the register indirect instructions. It can be regarded as being located in the default EDS Page 0 (i.e., EDS address range of 0x000000 to 0x007FFF with the base address bit, EA[15] = 0, for this address range). However, Page 0 cannot be accessed through the upper 32 Kbytes, 0x8000 to 0xFFFF, of base Data Space in combination with DSRPAG = 0x00. Consequently, DSRPAG is initialized to 0x001 at Reset.

> **Note 1:** DSRPAG should not be used to access Page 0. An EDS access with DSRPAG set to 0x000 will generate an address error trap.
>
> **2:** Clearing the DSRPAG in software has no effect.

The remaining PSV pages are only accessible using the DSRPAG register in combination with the upper 32 Kbytes, 0x8000 to 0xFFFF, of the base address, where the base address bit, EA[15] = 1.

4.4.1.2 Software Stack

The W15 register serves as a dedicated Software Stack Pointer (SSP), and is automatically modified by exception processing, subroutine calls and returns; however, W15 can be referenced by any instruction in the same manner as all other W registers. This simplifies reading, writing and manipulating the Stack Pointer (for example, creating stack frames).

> **Note:** To protect against misaligned stack accesses, W15[0] is fixed to '0' by the hardware.

W15 is initialized to 0x1000 during all Resets. This address ensures that the SSP points to valid RAM in all dsPIC33CK64MP105 devices and permits stack availability for non-maskable trap exceptions. These can occur before the SSP is initialized by the user software. You can reprogram the SSP during initialization to any location within Data Space.

The Software Stack Pointer always points to the first available free word and fills the software stack, working from lower toward higher addresses. Figure 4-9 illustrates how it pre-decrements for a stack pop (read) and post-increments for a stack push (writes).

When the PC is pushed onto the stack, PC[15:0] are pushed onto the first available stack word, then PC[22:16] are pushed into the second available stack location. For a PC push during any CALL instruction, the MSB of the PC is zero-extended before the push, as shown in Figure 4-9. During exception processing, the MSB of the PC is concatenated with the lower eight bits of the CPU STATUS Register, SR. This allows the contents of SRL to be preserved automatically during interrupt processing.

> **Note 1:** To maintain system Stack Pointer (W15) coherency, W15 is never subject to (EDS) paging, and is therefore, restricted to an address range of 0x0000 to 0xFFFF. The same applies to the W14 when used as a Stack Frame Pointer (SFA = 1).
>
> **2:** As the stack can be placed in, and can access X and Y spaces, care must be taken regarding its use, particularly with regard to local automatic variables in a C development environment

FIGURE 4-9: CALL STACK FRAME

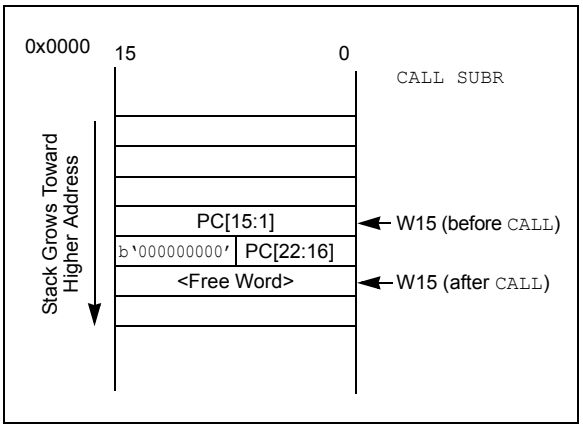

© 2018-2019 Microchip Technology Inc.

4.4.2 INSTRUCTION ADDRESSING MODES

The addressing modes shown in Table 4-15 form the basis of the addressing modes optimized to support the specific features of individual instructions. The addressing modes provided in the `MAC` class of instructions differ from those in the other instruction types.

4.4.2.1 File Register Instructions

Most file register instructions use a 13-bit address field (f) to directly address data present in the first 8192 bytes of data memory (Near Data Space). Most file register instructions employ a Working register, W0, which is denoted as WREG in these instructions. The destination is typically either the same file register or WREG (with the exception of the `MUL` instruction), which writes the result to a register or register pair. The `MOV` instruction allows additional flexibility and can access the entire Data Space.

4.4.2.2 MCU Instructions

The three-operand MCU instructions are of the form:

```
Operand 3 = Operand 1 <function> Operand 2
```

where `Operand 1` is always a Working register (that is, the addressing mode can only be Register Direct), which is referred to as Wb. `Operand 2` can be a W register fetched from data memory or a 5-bit literal. The result location can either be a W register or a data memory location. The following addressing modes are supported by MCU instructions:

- Register Direct
- Register Indirect
- Register Indirect Post-Modified
- Register Indirect Pre-Modified
- 5-Bit or 10-Bit Literal

Note: Not all instructions support all the addressing modes given above. Individual instructions can support different subsets of these addressing modes.

TABLE 4-15: FUNDAMENTAL ADDRESSING MODES SUPPORTED

Addressing Mode	Description
File Register Direct	The address of the file register is specified explicitly.
Register Direct	The contents of a register are accessed directly.
Register Indirect	The contents of Wn form the Effective Address (EA).
Register Indirect Post-Modified	The contents of Wn form the EA. Wn is post-modified (incremented or decremented) by a constant value.
Register Indirect Pre-Modified	Wn is pre-modified (incremented or decremented) by a signed constant value to form the EA.
Register Indirect with Register Offset (Register Indexed)	The sum of Wn and Wb forms the EA.
Register Indirect with Literal Offset	The sum of Wn and a literal forms the EA.

4.4.2.3 Move and Accumulator Instructions

Move instructions, and the DSP accumulator class of instructions, provide a greater degree of addressing flexibility than other instructions. In addition to the addressing modes supported by most MCU instructions, move and accumulator instructions also support Register Indirect with Register Offset Addressing mode, also referred to as Register Indexed mode.

> **Note:** For the `MOV` instructions, the addressing mode specified in the instruction can differ for the source and destination EA. However, the 4-bit Wb (Register Offset) field is shared by both source and destination (but typically only used by one).

In summary, the following addressing modes are supported by move and accumulator instructions:

- Register Direct
- Register Indirect
- Register Indirect Post-Modified
- Register Indirect Pre-Modified
- Register Indirect with Register Offset (Indexed)
- Register Indirect with Literal Offset
- 8-Bit Literal
- 16-Bit Literal

> **Note:** Not all instructions support all the addressing modes given above. Individual instructions may support different subsets of these addressing modes.

4.4.2.4 `MAC` Instructions

The dual source operand DSP instructions (`CLR`, `ED`, `EDAC`, `MAC`, `MPY`, `MPY.N`, `MOVSAC` and `MSC`), also referred to as `MAC` instructions, use a simplified set of addressing modes to allow the user application to effectively manipulate the Data Pointers through register indirect tables.

The two-source operand prefetch registers must be members of the set {W8, W9, W10, W11}. For data reads, W8 and W9 are always directed to the X RAGU, and W10 and W11 are always directed to the Y AGU. The Effective Addresses generated (before and after modification) must therefore, be valid addresses within X Data Space for W8 and W9, and Y Data Space for W10 and W11.

> **Note:** Register Indirect with Register Offset Addressing mode is available only for W9 (in X space) and W11 (in Y space).

In summary, the following addressing modes are supported by the `MAC` class of instructions:

- Register Indirect
- Register Indirect Post-Modified by 2
- Register Indirect Post-Modified by 4
- Register Indirect Post-Modified by 6
- Register Indirect with Register Offset (Indexed)

4.4.2.5 Other Instructions

Besides the addressing modes outlined previously, some instructions use literal constants of various sizes. For example, `BRA` (branch) instructions use 16-bit signed literals to specify the branch destination directly, whereas the `DISI` instruction uses a 14-bit unsigned literal field. In some instructions, such as `ULNK`, the source of an operand or result is implied by the opcode itself. Certain operations, such as a `NOP`, do not have any operands.

© 2018-2019 Microchip Technology Inc.

4.4.3 MODULO ADDRESSING

Modulo Addressing mode is a method of providing an automated means to support circular data buffers using hardware. The objective is to remove the need for software to perform data address boundary checks when executing tightly looped code, as is typical in many DSP algorithms.

Modulo Addressing can operate in either Data or Program Space (since the Data Pointer mechanism is essentially the same for both). One circular buffer can be supported in each of the X (which also provides the pointers into Program Space) and Y Data Spaces. Modulo Addressing can operate on any W Register Pointer. However, it is not advisable to use W14 or W15 for Modulo Addressing since these two registers are used as the Stack Frame Pointer and Stack Pointer, respectively.

In general, any particular circular buffer can be configured to operate in only one direction, as there are certain restrictions on the buffer start address (for incrementing buffers) or end address (for decrementing buffers), based upon the direction of the buffer.

The only exception to the usage restrictions is for buffers that have a power-of-two length. As these buffers satisfy the start and end address criteria, they can operate in a Bidirectional mode (that is, address boundary checks are performed on both the lower and upper address boundaries).

4.4.3.1 Start and End Address

The Modulo Addressing scheme requires that a starting and ending address be specified and loaded into the 16-bit Modulo Buffer Address registers: XMODSRT, XMODEND, YMODSRT and YMODEND (see Table 4-2).

> **Note:** Y space Modulo Addressing EA calculations assume word-sized data (LSb of every EA is always clear).

The length of a circular buffer is not directly specified. It is determined by the difference between the corresponding start and end addresses. The maximum possible length of the circular buffer is 32K words (64 Kbytes).

4.4.3.2 W Address Register Selection

The Modulo and Bit-Reversed Addressing Control register, MODCON[15:0], contains enable flags, as well as a W register field to specify the W Address registers. The XWM and YWM fields select the registers that operate with Modulo Addressing:

- If XWM = `1111`, X RAGU and X WAGU Modulo Addressing is disabled
- If YWM = `1111`, Y AGU Modulo Addressing is disabled

The X Address Space Pointer W (XWM) register, to which Modulo Addressing is to be applied, is stored in MODCON[3:0] (see Table 4.1). Modulo Addressing is enabled for X Data Space when XWM is set to any value other than '`1111`' and the XMODEN bit is set (MODCON[15]).

The Y Address Space Pointer W (YWM) register, to which Modulo Addressing is to be applied, is stored in MODCON[7:4]. Modulo Addressing is enabled for Y Data Space when YWM is set to any value other than '`1111`' and the YMODEN bit (MODCON[14]) is set.

FIGURE 4-10: MODULO ADDRESSING OPERATION EXAMPLE

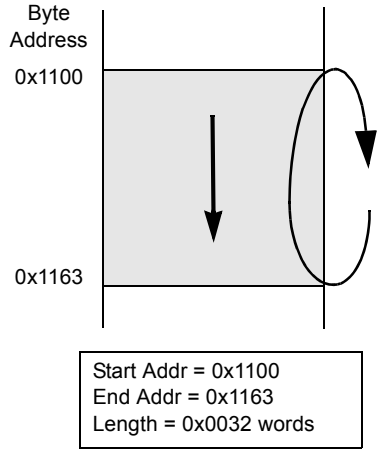


```
MOV     #0x1100, W0
MOV     W0, XMODSRT     ;set modulo start address
MOV     #0x1163, W0
MOV     W0, MODEND      ;set modulo end address
MOV     #0x8001, W0
MOV     W0, MODCON      ;enable W1, X AGU for modulo

MOV     #0x0000, W0     ;W0 holds buffer fill value

MOV     #0x1110, W1     ;point W1 to buffer

DO      AGAIN, #0x31    ;fill the 50 buffer locations
MOV     W0, [W1++]      ;fill the next location
AGAIN:  INC W0, W0      ;increment the fill value
```

4.4.3.3 Modulo Addressing Applicability

Modulo Addressing can be applied to the Effective Address (EA) calculation associated with any W register. Address boundaries check for addresses equal to:

- The upper boundary addresses for incrementing buffers
- The lower boundary addresses for decrementing buffers

It is important to realize that the address boundaries check for addresses less than, or greater than, the upper (for incrementing buffers) and lower (for decrementing buffers) boundary addresses (not just equal to). Address changes can, therefore, jump beyond boundaries and still be adjusted correctly.

Note:	The modulo corrected Effective Address is written back to the register only when Pre-Modify or Post-Modify Addressing mode is used to compute the Effective Address. When an address offset (such as [W7 + W2]) is used, Modulo Addressing correction is performed, but the contents of the register remain unchanged.

4.4.4 BIT-REVERSED ADDRESSING

Bit-Reversed Addressing mode is intended to simplify data reordering for radix-2 FFT algorithms. It is supported by the X AGU for data writes only.

The modifier, which can be a constant value or register contents, is regarded as having its bit order reversed. The address source and destination are kept in normal order. Thus, the only operand requiring reversal is the modifier.

4.4.4.1 Bit-Reversed Addressing Implementation

Bit-Reversed Addressing mode is enabled in any of these situations:

- BWMx bits (W register selection) in the MODCON register are any value other than '`1111`' (the stack cannot be accessed using Bit-Reversed Addressing)
- The BREN bit is set in the XBREV register
- The addressing mode used is Register Indirect with Pre-Increment or Post-Increment

If the length of a bit-reversed buffer is $M = 2^N$ bytes, the last 'N' bits of the data buffer start address must be zeros.

XB[14:0] is the Bit-Reversed Addressing modifier, or 'pivot point', which is typically a constant. In the case of an FFT computation, its value is equal to half of the FFT data buffer size.

Note:	All bit-reversed EA calculations assume word-sized data (LSb of every EA is always clear). The XB value is scaled accordingly to generate compatible (byte) addresses.

When enabled, Bit-Reversed Addressing is executed only for Register Indirect with Pre-Increment or Post-Increment Addressing and word-sized data writes. It does not function for any other addressing mode or for byte-sized data and normal addresses are generated instead. When Bit-Reversed Addressing is active, the W Address Pointer is always added to the address modifier (XB) and the offset associated with the Register Indirect Addressing mode is ignored. In addition, as word-sized data is a requirement, the LSb of the EA is ignored (and always clear).

Note:	Modulo Addressing and Bit-Reversed Addressing can be enabled simultaneously using the same W register, but Bit-Reversed Addressing operation will always take precedence for data writes when enabled.

If Bit-Reversed Addressing has already been enabled by setting the BREN (XBREV[15]) bit, a write to the XBREV register should not be immediately followed by an indirect read operation using the W register that has been designated as the Bit-Reversed Pointer.

© 2018-2019 Microchip Technology Inc.

FIGURE 4-11: BIT-REVERSED ADDRESSING EXAMPLE

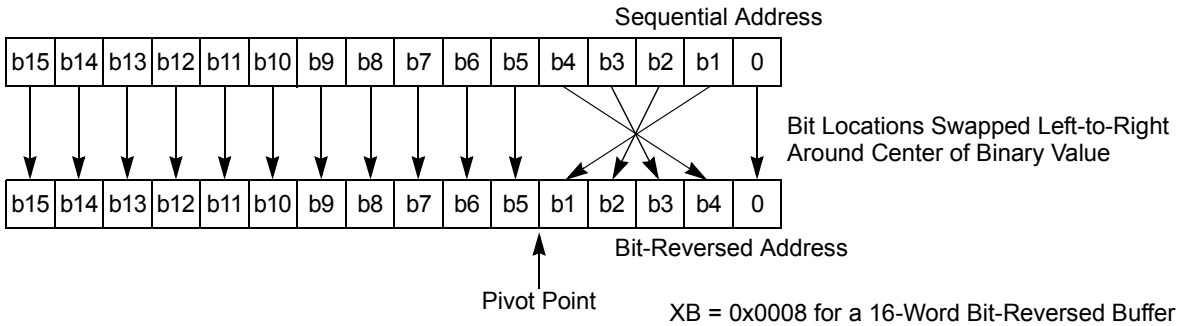

TABLE 4-16: BIT-REVERSED ADDRESSING SEQUENCE (16-ENTRY)

Normal Address					Bit-Reversed Address				
A3	A2	A1	A0	Decimal	A3	A2	A1	A0	Decimal
0	0	0	0	0	0	0	0	0	0
0	0	0	1	1	1	0	0	0	8
0	0	1	0	2	0	1	0	0	4
0	0	1	1	3	1	1	0	0	12
0	1	0	0	4	0	0	1	0	2
0	1	0	1	5	1	0	1	0	10
0	1	1	0	6	0	1	1	0	6
0	1	1	1	7	1	1	1	0	14
1	0	0	0	8	0	0	0	1	1
1	0	0	1	9	1	0	0	1	9
1	0	1	0	10	0	1	0	1	5
1	0	1	1	11	1	1	0	1	13
1	1	0	0	12	0	0	1	1	3
1	1	0	1	13	1	0	1	1	11
1	1	1	0	14	0	1	1	1	7
1	1	1	1	15	1	1	1	1	15

4.4.5 INTERFACING PROGRAM AND DATA MEMORY SPACES

The dsPIC33CK64MP105 family architecture uses a 24-bit wide Program Space (PS) and a 16-bit wide Data Space (DS). The architecture is also a modified Harvard scheme, meaning that data can also be present in the Program Space. To use this data successfully, it must be accessed in a way that preserves the alignment of information in both spaces.

Aside from normal execution, the architecture of the dsPIC33CK64MP105 family devices provides two methods by which Program Space can be accessed during operation:

- Using table instructions to access individual bytes or words anywhere in the Program Space
- Remapping a portion of the Program Space into the Data Space (Program Space Visibility)

Table instructions allow an application to read small areas of the program memory. This capability makes the method ideal for accessing data tables that need to be updated periodically. It also allows access to all bytes of the program word. The remapping method allows an application to access a large block of data on a read-only basis, which is ideal for look-ups from a large table of static data. The application can only access the least significant word of the program word.

TABLE 4-17: PROGRAM SPACE ADDRESS CONSTRUCTION

Access Type	Access Space	Program Space Address				
		[23]	[22:16]	[15]	[14:1]	[0]
Instruction Access (Code Execution)	User	0	PC[22:1]			0
		0xxx xxxx xxxx xxxx xxxx xxx0				
TBLRD (Byte/Word Read)	User	TBLPAG[7:0]		Data EA[15:0]		
		0xxx xxxx		xxxx xxxx xxxx xxxx		
	Configuration	TBLPAG[7:0]		Data EA[15:0]		
		1xxx xxxx		xxxx xxxx xxxx xxxx		

FIGURE 4-12: DATA ACCESS FROM PROGRAM SPACE ADDRESS GENERATION

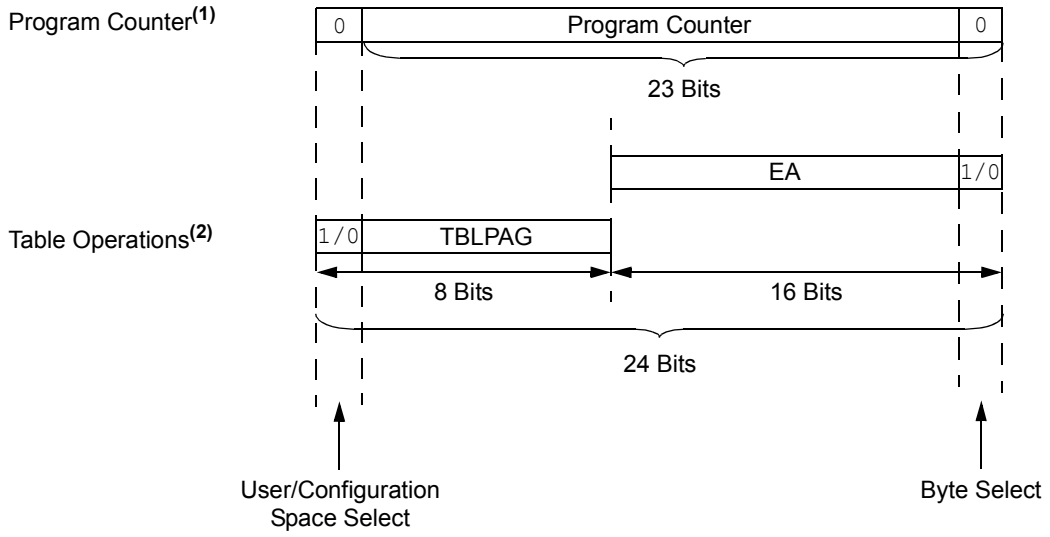

Note 1: The Least Significant bit (LSb) of Program Space addresses is always fixed as '0' to maintain word alignment of data in the Program and Data Spaces.

2: Table operations are not required to be word-aligned. Table Read operations are permitted in the configuration memory space.

© 2018-2019 Microchip Technology Inc.

4.4.5.1 Data Access from Program Memory Using Table Instructions

The TBLRDL instruction offers a direct method of reading the lower word of any address within the Program Space without going through Data Space. The TBLRDH instruction is the only method to read the upper eight bits of a Program Space word as data.

This allows program memory addresses to directly map to Data Space addresses. Program memory can thus be regarded as two 16-bit wide word address spaces, residing side by side, each with the same address range. TBLRDL accesses the space that contains the least significant data word. TBLRDH accesses the space that contains the upper data byte.

Two table instructions are provided to read byte or word-sized (16-bit) data from Program Space. Both function as either byte or word operations.

- TBLRDL (Table Read Low):
  - In Word mode, this instruction maps the lower word of the Program Space location (P[15:0]) to a data address (D[15:0])
  - In Byte mode, either the upper or lower byte of the lower program word is mapped to the lower byte of a data address. The upper byte is selected when Byte Select is '1'; the lower byte is selected when it is '0'.
- TBLRDH (Table Read High):
  - In Word mode, this instruction maps the entire upper word of a program address (P[23:16]) to a data address. The 'phantom' byte (D[15:8]) is always '0'.
  - In Byte mode, this instruction maps the upper or lower byte of the program word to D[7:0] of the data address in the TBLRDL instruction. The data is always '0' when the upper 'phantom' byte is selected (Byte Select = 1).

FIGURE 4-13: ACCESSING PROGRAM MEMORY WITH TABLE INSTRUCTIONS

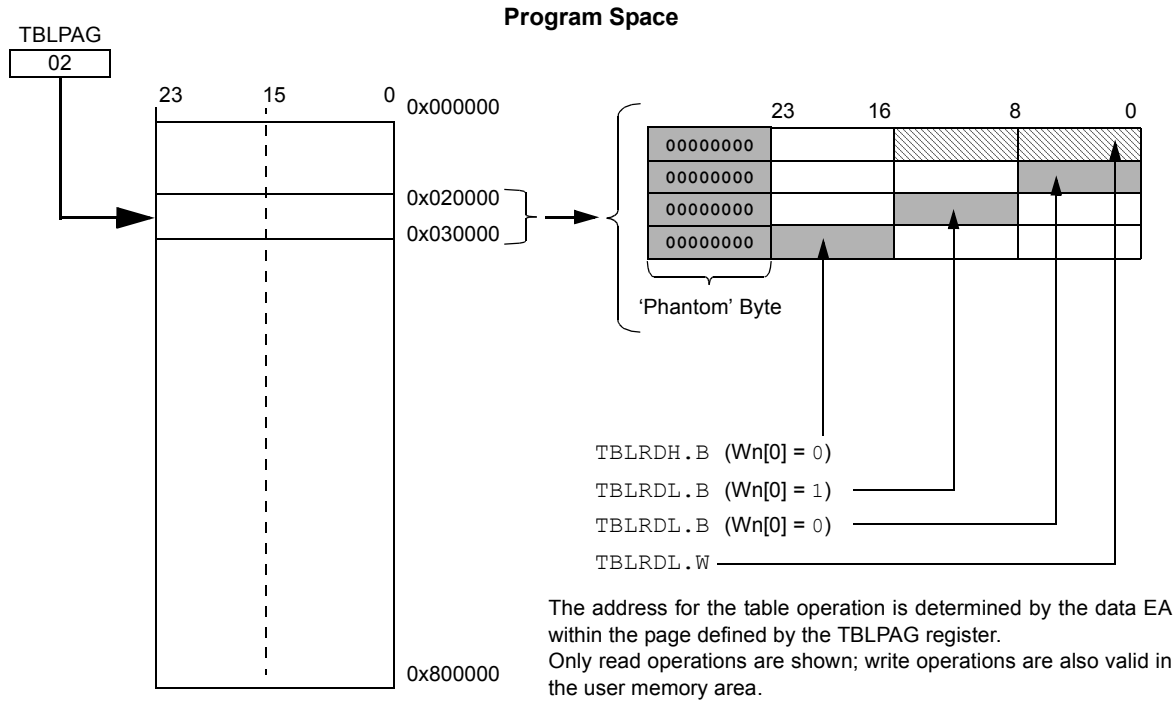

NOTES:

© 2018-2019 Microchip Technology Inc.

5.0 FLASH PROGRAM MEMORY

Note 1: This data sheet summarizes the features of the dsPIC33CK64MP105 family of devices. It is not intended to be a comprehensive reference source. To complement the information in this data sheet, refer to **"Dual Partition Flash Program Memory"** (www.microchip.com/DS70005156) in the *"dsPIC33/PIC24 Family Reference Manual"*.

2: Some registers and associated bits described in this section may not be available on all devices.

3: This section refers to the **"Dual Partition Flash Program Memory"** (www.microchip.com/DS70005156), but the Dual Partition feature is not implemented.

The dsPIC33CK64MP105 family devices contain internal Flash program memory for storing and executing application code. The memory is readable, writable and erasable during normal operation over the entire VDD range.

Flash memory can be programmed in three ways:

- In-Circuit Serial Programming™ (ICSP™) programming capability
- Enhanced In-Circuit Serial Programming (Enhanced ICSP)
- Run-Time Self-Programming (RTSP)

ICSP allows for a dsPIC33CK64MP105 family device to be serially programmed while in the end application circuit. This is done with a Programming Clock and Programming Data (PGCx/PGDx) line, and three other lines for power (VDD), ground (VSS) and Master Clear (MCLR). This allows customers to manufacture boards with unprogrammed devices and then program the device just before shipping the product. This also allows the most recent firmware or a custom firmware to be programmed.

Enhanced In-Circuit Serial Programming uses an on-board bootloader, known as the Programming Executive, to manage the programming process. Using an SPI data frame format, the Programming Executive can erase, program and verify program memory. For more information on Enhanced ICSP, see the device programming specification.

RTSP is accomplished using `TBLRD` (Table Read) and `TBLWT` (Table Write) instructions. With RTSP, the user application can write program memory data by double program memory words or by blocks ('rows') of 128 instructions (256 addressable bytes). RTSP can erase program memory in blocks or 'pages' of 1024 instructions (2048 addressable bytes) at a time.

5.1 Table Instructions and Flash Programming

Regardless of the method used, all programming of Flash memory is done with the Table Read and Table Write instructions. These allow direct read and write access to the program memory space from the data memory while the device is in normal operating mode. The 24-bit target address in the program memory is formed using bits[7:0] of the TBLPAG register and the Effective Address (EA) from a W register, specified in the table instruction, as shown in Figure 5-1. The `TBLRDL` and `TBLWTL` instructions are used to read or write to bits[15:0] of program memory. `TBLRDL` and `TBLWTL` can access program memory in both Word and Byte modes. The `TBLRDH` and `TBLWTH` instructions are used to read or write to bits[23:16] of program memory. `TBLRDH` and `TBLWTH` can also access program memory in Word or Byte mode.

FIGURE 5-1: ADDRESSING FOR TABLE REGISTERS

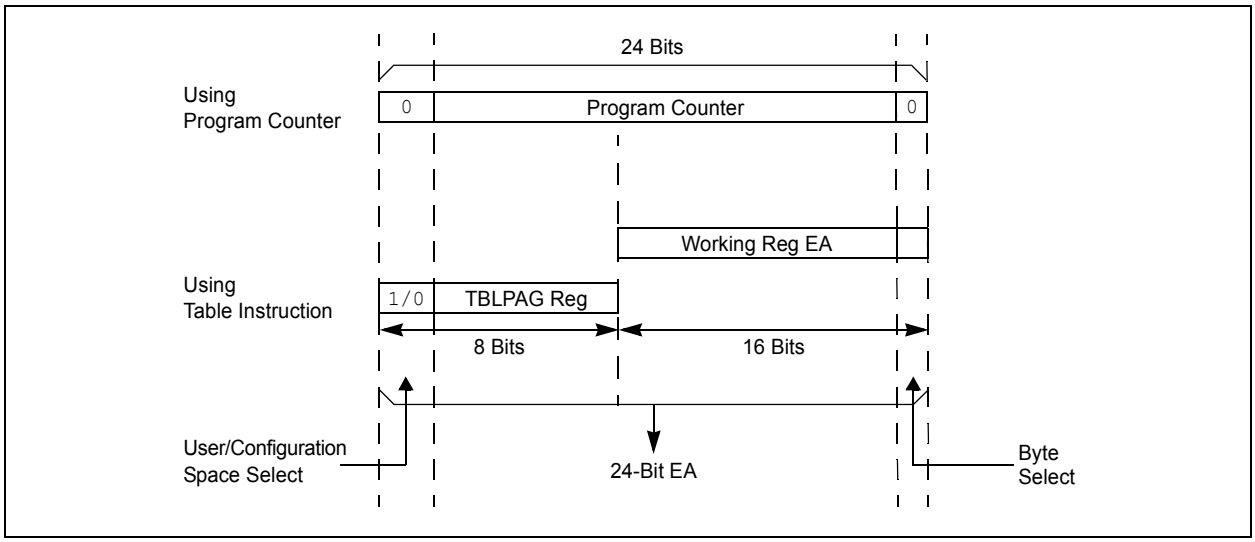

5.2 RTSP Operation

The dsPIC33CK64MP105 family Flash program memory array is organized into rows of 128 instructions or 384 bytes. RTSP allows the user application to erase a single page (eight rows or 1024 instructions) of memory at a time and to program one row at a time. It is possible to program two instructions at a time as well.

The page erase and single row write blocks are edge-aligned, from the beginning of program memory, on boundaries of 3072 bytes and 384 bytes, respectively. Table 31-18 in **Section 31.0 "Electrical Characteristics"** lists the typical erase and programming times. To write into the Flash memory, it is necessary to erase the page that contains the desired address of the location the user wants to change.

Row programming is performed by loading 384 bytes into data memory and then loading the address of the first byte in that row into the NVMSRCADRL/H register pair. Once the write has been initiated, the device will automatically load the write latches, and increment the NVMSRCADRL/H and the NVMADR/U registers until all bytes have been programmed. The RPDF bit (NVMCON[9]) selects the format of the stored data in RAM to be either compressed or uncompressed. See Figure 5-2 for data formatting. Compressed data helps to reduce the amount of required RAM by using the upper byte of the second word for the MSB of the second instruction.

The basic sequence for RTSP word programming is to use the `TBLWTL` and `TBLWTH` instructions to load two of the 24-bit instructions into the write latches found in configuration memory space. Refer to Figure 4-1 through Figure 4-3 for write latch addresses. Programming is performed by unlocking and setting the control bits in the NVMCON register.

All erase and program operations may optionally use the NVM interrupt to signal the successful completion of the operation.

FIGURE 5-2: UNCOMPRESSED/ COMPRESSED FORMAT

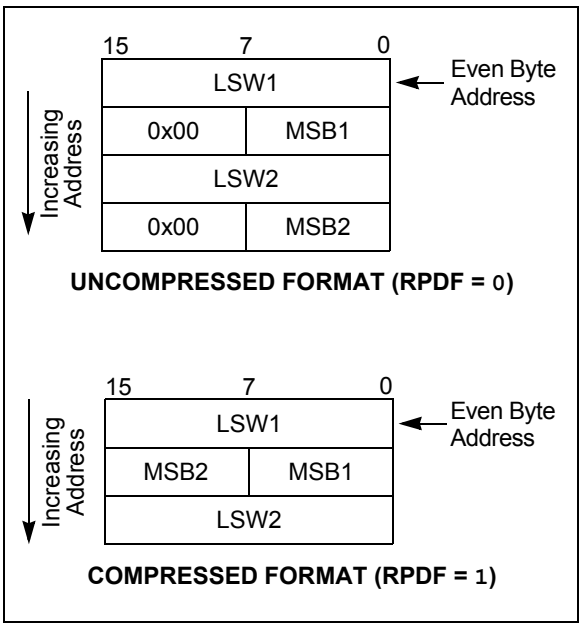

A complete programming sequence is necessary for programming or erasing the internal Flash in RTSP mode. The processor stalls (waits) until the programming operation is finished. Setting the WR bit (NVMCON[15]) starts the operation and the WR bit is automatically cleared when the operation is finished. The WR bit is protected against an accidental write. To set this bit, 0x55 and 0xAA values must be written sequentially into the NVMKEY register. After the programming command (WR bit = `1`) has been executed, the user application must wait until programming is complete (WR bit = `0`). The two instructions following the start of the programming sequence should be `NOP`s.

> **Note:** MPLAB® XC16 provides a built-in C language function, including the unlocking sequence to set the WR bit in the NVMCON register:
> `__builtin_write_NVM()`

© 2018-2019 Microchip Technology Inc.

5.3 Program Flash Memory Control Registers

Six SFRs are used to write and erase the Program Flash Memory: NVMCON, NVMKEY, NVMADR/U and NVMSRCADRL/H.

The NVMCON register (Register 5-1) selects the operation to be performed (page erase, word/row program, Inactive Partition erase) and initiates the program or erase cycle.

NVMKEY (Register 5-4) is a write-only register that is used for write protection. To start a programming or erase sequence, the user application must consecutively write 0x55 and 0xAA to the NVMKEY register.

There are two NVM Address registers: NVMADRU and NVMADR. These two registers, when concatenated, form the 24-bit Effective Address (EA) of the selected word/row for programming operations, or the selected page for erase operations. The NVMADRU register is used to hold the upper eight bits of the EA, while the NVMADR register is used to hold the lower 16 bits of the EA.

For row programming operation, data to be written to Program Flash Memory is written into data memory space (RAM) at an address defined by the NVMSRCADRL/H register pair (location of first element in row programming data).

© 2018-2019 Microchip Technology Inc.

REGISTER 5-1: NVMCON: NONVOLATILE MEMORY (NVM) CONTROL REGISTER

R/SO-0(1,6)	R/W-0(1)	R/W-0(1)	R/W-0	U-0	U-0	R/W-0	R/C-0
WR	WREN	WRERR	NVMSIDL(2)	—	—	RPDF	URERR
bit 15							bit 8

U-0	U-0	U-0	U-0	R/W-0(1)	R/W-0(1)	R/W-0(1)	R/W-0(1)
—	—	—	—	NVMOP3(3,4)	NVMOP2(3,4)	NVMOP1(3,4)	NVMOP0(3,4)
bit 7							bit 0

Legend:	C = Clearable bit	SO = Settable Only bit	
R = Readable bit	W = Writable bit	U = Unimplemented bit, read as ‘0’	
-n = Value at POR	‘1’ = Bit is set	‘0’ = Bit is cleared	x = Bit is unknown

bit 15 **WR:** Write Control bit(1,6)
- 1 = Initiates a Flash memory program or erase operation; the operation is self-timed and the bit is cleared by hardware once the operation is complete
- 0 = Program or erase operation is complete and inactive

bit 14 **WREN:** Write Enable bit(1)
- 1 = Enables Flash program/erase operations
- 0 = Inhibits Flash program/erase operations

bit 13 **WRERR:** Write Sequence Error Flag bit(1)
- 1 = An improper program or erase sequence attempt, or termination has occurred (bit is set automatically on any set attempt of the WR bit)
- 0 = The program or erase operation completed normally

bit 12 **NVMSIDL:** NVM Stop in Idle Control bit(2)
- 1 = Flash voltage regulator goes into Standby mode during Idle mode
- 0 = Flash voltage regulator is active during Idle mode

bit 11-10 **Unimplemented:** Read as ‘0’

bit 9 **RPDF:** Row Programming Data Format bit
- 1 = Row data to be stored in RAM is in compressed format
- 0 = Row data to be stored in RAM is in uncompressed format

bit 8 **URERR:** Row Programming Data Underrun Error bit
- 1 = Indicates row programming operation has been terminated
- 0 = No data underrun error is detected

bit 7-4 **Unimplemented:** Read as ‘0’

Note 1: These bits can only be reset on a POR.

2: If this bit is set, there will be minimal power savings (I_{IDLE}), and upon exiting Idle mode, there is a delay (T_{VREG}) before Flash memory becomes operational.

3: All other combinations of NVMOP[3:0] are unimplemented.

4: Execution of the PWRSAV instruction is ignored while any of the NVM operations are in progress.

5: Two adjacent words on a 4-word boundary are programmed during execution of this operation.

6: An unlock sequence is required to write to this bit (see **Section 5.2 “RTSP Operation”**).

© 2018-2019 Microchip Technology Inc.

REGISTER 5-1: NVMCON: NONVOLATILE MEMORY (NVM) CONTROL REGISTER (CONTINUED)

bit 3-0 **NVMOP[3:0]:** NVM Operation Select bits[1,3,4]

1111 = Reserved
1110 = User memory bulk erase operation
1101 = Reserved
1100 = Reserved
1011 = Reserved
1010 = Reserved
1001 = Reserved
1000 = Reserved
0111 = Reserved
0101 = Reserved
0100 = Reserved
0011 = Memory page erase operation
0010 = Memory row program operation
0001 = Memory double-word operation[5]
0000 = Reserved

Note 1: These bits can only be reset on a POR.

2: If this bit is set, there will be minimal power savings (IIDLE), and upon exiting Idle mode, there is a delay (TVREG) before Flash memory becomes operational.

3: All other combinations of NVMOP[3:0] are unimplemented.

4: Execution of the PWRSAV instruction is ignored while any of the NVM operations are in progress.

5: Two adjacent words on a 4-word boundary are programmed during execution of this operation.

6: An unlock sequence is required to write to this bit (see **Section 5.2 “RTSP Operation”**).

REGISTER 5-2: NVMADR: NONVOLATILE MEMORY LOWER ADDRESS REGISTER

R/W-x	R/W-x	R/W-x	R/W-x	R/W-x	R/W-x	R/W-x	R/W-x
NVMADR[15:8]							
bit 15							bit 8

R/W-x	R/W-x	R/W-x	R/W-x	R/W-x	R/W-x	R/W-x	R/W-x
NVMADR[7:0]							
bit 7							bit 0

Legend:			
R = Readable bit	W = Writable bit	U = Unimplemented bit, read as ‘0’	
-n = Value at POR	‘1’ = Bit is set	‘0’ = Bit is cleared	x = Bit is unknown

bit 15-0 **NVMADR[15:0]:** Nonvolatile Memory Lower Write Address bits
Selects the lower 16 bits of the location to program or erase in Program Flash Memory. This register may be read or written to by the user application.

REGISTER 5-3: NVMADRU: NONVOLATILE MEMORY UPPER ADDRESS REGISTER

U-0	U-0	U-0	U-0	U-0	U-0	U-0	U-0
—	—	—	—	—	—	—	—
bit 15							bit 8

R/W-x	R/W-x	R/W-x	R/W-x	R/W-x	R/W-x	R/W-x	R/W-x
NVMADRU[23:16]							
bit 7							bit 0

Legend:			
R = Readable bit	W = Writable bit	U = Unimplemented bit, read as ‘0’	
-n = Value at POR	‘1’ = Bit is set	‘0’ = Bit is cleared	x = Bit is unknown

bit 15-8 **Unimplemented:** Read as ‘0’

bit 7-0 **NVMADRU[23:16]:** Nonvolatile Memory Upper Write Address bits
Selects the upper eight bits of the location to program or erase in Program Flash Memory. This register may be read or written to by the user application.

© 2018-2019 Microchip Technology Inc.

REGISTER 5-4: NVMKEY: NONVOLATILE MEMORY KEY REGISTER

U-0	U-0	U-0	U-0	U-0	U-0	U-0	U-0
—	—	—	—	—	—	—	—
bit 15							bit 8

W-0	W-0	W-0	W-0	W-0	W-0	W-0	W-0
NVMKEY[7:0]							
bit 7							bit 0

Legend:			
R = Readable bit	W = Writable bit	U = Unimplemented bit, read as ‘0’	
-n = Value at POR	‘1’ = Bit is set	‘0’ = Bit is cleared	x = Bit is unknown

bit 15-8 **Unimplemented:** Read as ‘0’

bit 7-0 **NVMKEY[7:0]:** NVM Key Register bits (write-only)

REGISTER 5-5: NVMSRCADRL: NVM SOURCE DATA ADDRESS REGISTER LOW

R/W-0	R/W-0	R/W-0	R/W-0	R/W-0	R/W-0	R/W-0	R/W-0
NVMSRCADR[15:8]							
bit 15							bit 8

R/W-0	R/W-0	R/W-0	R/W-0	R/W-0	R/W-0	R/W-0	R/W-0
NVMSRCADR[7:0]							
bit 7							bit 0

Legend:			
R = Readable bit	W = Writable bit	U = Unimplemented bit, read as ‘0’	
-n = Value at POR	‘1’ = Bit is set	‘0’ = Bit is cleared	x = Bit is unknown

bit 15-0 **NVMSRCADR[15:0]:** NVM Source Data Address bits
The RAM address of the data to be programmed into Flash when the NVMOP[3:0] bits are set to row programming.

REGISTER 5-6: NVMSRCADRH: NVM SOURCE DATA ADDRESS REGISTER HIGH

U-0	U-0	U-0	U-0	U-0	U-0	U-0	U-0
—	—	—	—	—	—	—	—
bit 15							bit 8

R/W-0	R/W-0	R/W-0	R/W-0	R/W-0	R/W-0	R/W-0	R/W-0
NVMSRCADR[23:16]							
bit 7							bit 0

Legend:			
R = Readable bit	W = Writable bit	U = Unimplemented bit, read as ‘0’	
-n = Value at POR	‘1’ = Bit is set	‘0’ = Bit is cleared	x = Bit is unknown

bit 15-8 **Unimplemented:** Read as ‘0’

bit 7-0 **NVMSRCADR[23:16]:** NVM Source Data Address bits
The RAM address of the data to be programmed into Flash when the NVMOP[3:0] bits are set to row programming.

© 2018-2019 Microchip Technology Inc.

5.4 Error Correcting Code (ECC)

In order to improve program memory performance and durability, these devices include Error Correcting Code (ECC) functionality as an integral part of the Flash memory controller. ECC can determine the presence of single-bit errors in program data, including which bit is in error, and correct the data automatically without user intervention. ECC cannot be disabled.

When data is written to program memory, ECC generates a 7-bit Hamming code parity value for every two (24-bit) instruction words. The data is stored in blocks of 48 data bits and seven parity bits; parity data is not memory-mapped and is inaccessible. When the data is read back, the ECC calculates the parity on it and compares it to the previously stored parity value. If a parity mismatch occurs, there are two possible outcomes:

- Single-bit error has occurred and has been automatically corrected on readback.
- Double-bit error has occurred and the read data is not changed.

Single-bit error occurrence can be identified by the state of the ECCSBEIF (IFS0[13]) bit. An interrupt can be generated when the corresponding interrupt enable bit is set, ECCSBEIE (IEC0[13]). The ECCSTATL register contains the parity information for single-bit errors. The SECOUT[7:0] bits field contains the expected calculated SEC parity and the SECIN[7:0] bits contain the actual value from a Flash read operation. The SECSYNDx bits (ECCSTATH[7:0]) indicate the bit position of the single-bit error within the 48-bit pair of instruction words. When no error is present, SECINx equals SECOUTx and SECSYNDx is zero.

Double-bit errors result in a generic hard trap. The ECCDBE bit (INTCON4[1]) bit will be set to identify the source of the hard trap. If no Interrupt Service Routine is implemented for the hard trap, a device Reset will also occur. The ECCSTATH register contains double-bit error status information. The DEDOUT bit is the expected calculated DED parity and DEDIN is the actual value from a Flash read operation. When no error is present, DEDIN equals DEDOUT.

5.4.1 ECC FAULT INJECTION

To test Fault handling, an EEC error can be generated. Both single and double-bit errors can be generated in both the read and write data paths. Read path Fault injection first reads the Flash data and then modifies it prior to entering the ECC logic. Write path Fault injection modifies the actual data prior to it being written into the target Flash and will cause an EEC error on a subsequent Flash read. The following procedure is used to inject a Fault:

1. Load the Flash target address into the ECCADDR register.
2. Select 1st Fault bit determined by FLT1PTRx (ECCCONH[7:0]). The target bit is inverted to create the Fault.
3. If a double Fault is desired, select the 2nd Fault bit determined by FLT2PTRx (ECCCONH[15:8]), otherwise set to all ‘1’s.
4. Write the NVMKEY unlock sequence (see **Section 5.3 “Program Flash Memory Control Registers”**).
5. Enable the ECC Fault injection logic by setting the FLTINJ bit (ECCCONL[0]).
6. Perform a read or write to the Flash target address.

5.4.2 ECC CONTROL REGISTERS

REGISTER 5-7: ECCCONL: ECC FAULT INJECTION CONFIGURATION REGISTER LOW

U-0	U-0	U-0	U-0	U-0	U-0	U-0	U-0
—	—	—	—	—	—	—	—
bit 15							bit 8

U-0	U-0	U-0	U-0	U-0	U-0	U-0	R/W-0
—	—	—	—	—	—	—	FLTINJ
bit 7							bit 0

Legend:			
R = Readable bit	W = Writable bit	U = Unimplemented bit, read as ‘0’	
-n = Value at POR	‘1’ = Bit is set	‘0’ = Bit is cleared	x = Bit is unknown

bit 15-1 **Unimplemented:** Read as ‘0’

bit 0 **FLTINJ:** Fault Injection Sequence Enable bit
1 = Enabled
0 = Disabled

REGISTER 5-8: ECCCONH: ECC FAULT INJECTION CONFIGURATION REGISTER HIGH

R/W-0	R/W-0	R/W-0	R/W-0	R/W-0	R/W-0	R/W-0	R/W-0
FLT2PTR[7:0]							
bit 15							bit 8

R/W-0	R/W-0	R/W-0	R/W-0	R/W-0	R/W-0	R/W-0	R/W-0
FLT1PTR[7:0]							
bit 7							bit 0

Legend:			
R = Readable bit	W = Writable bit	U = Unimplemented bit, read as ‘0’	
-n = Value at POR	‘1’ = Bit is set	‘0’ = Bit is cleared	x = Bit is unknown

bit 15-8 **FLT2PTR[7:0]:** ECC Fault Injection Bit Pointer 2 bits
11111111-00111000 = No Fault injection occurs
00110111 = Fault injection (bit inversion) occurs on bit 55 of ECC bit order
•
•
•
00000001 = Fault injection (bit inversion) occurs on bit 1 of ECC bit order
00000000 = Fault injection (bit inversion) occurs on bit 0 of ECC bit order

bit 7-0 **FLT1PTR[7:0]:** ECC Fault Injection Bit Pointer 1 bits
11111111-00111000 = No Fault injection occurs
00110111 = Fault injection occurs on bit 55 of ECC bit order
•
•
•
00000001 = Fault injection occurs on bit 1 of ECC bit order
00000000 = Fault injection occurs on bit 0 of ECC bit order

© 2018-2019 Microchip Technology Inc.

REGISTER 5-9: ECCADDRL: ECC FAULT INJECT ADDRESS COMPARE REGISTER LOW

R/W-0	R/W-0	R/W-0	R/W-0	R/W-0	R/W-0	R/W-0	R/W-0
ECCADDR[15:8]							
bit 15							bit 8

R/W-0	R/W-0	R/W-0	R/W-0	R/W-0	R/W-0	R/W-0	R/W-0
ECCADDR[7:0]							
bit 7							bit 0

Legend:			
R = Readable bit	W = Writable bit	U = Unimplemented bit, read as ‘0’	
-n = Value at POR	‘1’ = Bit is set	‘0’ = Bit is cleared	x = Bit is unknown

bit 15-0 **ECCADDR[15:0]:** ECC Fault Injection NVM Address Match Compare bits

REGISTER 5-10: ECCADDRH: ECC FAULT INJECT ADDRESS COMPARE REGISTER HIGH

U-0	U-0	U-0	U-0	U-0	U-0	U-0	U-0
—	—	—	—	—	—	—	—
bit 15							bit 8

R/W-0	R/W-0	R/W-0	R/W-0	R/W-0	R/W-0	R/W-0	R/W-0
ECCADDR[23:16]							
bit 7							bit 0

Legend:			
R = Readable bit	W = Writable bit	U = Unimplemented bit, read as ‘0’	
-n = Value at POR	‘1’ = Bit is set	‘0’ = Bit is cleared	x = Bit is unknown

bit 15-8 **Unimplemented:** Read as ‘0’

bit 7-0 **ECCADDR[23:16]:** ECC Fault Injection NVM Address Match Compare bits

REGISTER 5-11: ECCSTATL: ECC SYSTEM STATUS DISPLAY REGISTER LOW

R-0	R-0	R-0	R-0	R-0	R-0	R-0	R-0
SECOUT[7:0]							
bit 15							bit 8

R-0	R-0	R-0	R-0	R-0	R-0	R-0	R-0
SECIN[7:0]							
bit 7							bit 0

Legend:			
R = Readable bit	W = Writable bit	U = Unimplemented bit, read as ‘0’	
-n = Value at POR	‘1’ = Bit is set	‘0’ = Bit is cleared	x = Bit is unknown

bit 15-8 **SECOUT[7:0]:** Calculated Single Error Correction Parity Value bits

bit 7-0 **SECIN[7:0]:** Read Single Error Correction Parity Value bits
SECIN[7:0] bits are the actual parity value of a Flash read operation.

REGISTER 5-12: ECCSTATH: ECC SYSTEM STATUS DISPLAY REGISTER HIGH

U-0	U-0	U-0	U-0	U-0	U-0	R/W-0	R/W-0
—	—	—	—	—	—	DEDOUT	DEDIN
bit 15							bit 8

R-0	R-0	R-0	R-0	R-0	R-0	R-0	R-0
SECSYND[7:0]							
bit 7							bit 0

Legend:			
R = Readable bit	W = Writable bit	U = Unimplemented bit, read as ‘0’	
-n = Value at POR	‘1’ = Bit is set	‘0’ = Bit is cleared	x = Bit is unknown

bit 15-10 **Unimplemented:** Read as ‘0’

bit 9 **DEDOUT:** Calculated Dual Bit Error Detection Parity bit

bit 8 **DEDIN:** Read Dual Bit Error Detection Parity bit
DEDIN is the actual parity value of a Flash read operation.

bit 7-0 **SECSYND[7:0]:** Calculated ECC Syndrome Value bits
Indicates the bit location that contains the error.

© 2018-2019 Microchip Technology Inc.

5.5 ICSP™ Write Inhibit

ICSP Write Inhibit is an access restriction feature, that when activated, restricts all of Flash memory. Once activated, ICSP Write Inhibit permanently prevents ICSP Flash programming and erase operations, and cannot be deactivated. This feature is intended to prevent alteration of Flash memory contents, with behavior similar to One-Time-Programmable (OTP) devices.

RTSP, including erase and programming operations, is not restricted when ICSP Write Inhibit is activated; however, code to perform these actions must be programmed into the device before ICSP Write Inhibit is activated. This allows for a bootloader-type application to alter Flash contents with ICSP Write Inhibit activated.

Entry into ICSP and Enhanced ICSP modes is not affected by ICSP Write Inhibit. In these modes, it will continue to be possible to read configuration memory space and any user memory space regions which are not code-protected. With ICSP writes inhibited, an attempt to set WR (NVMCON[15]) = `1` will maintain WR = `0`, and instead, set WRERR (NVMCON[13]) = `1`. All Enhanced ICSP erase and programming commands will have no effect with self-checked programming commands returning a FAIL response opcode (PASS if the destination already exactly matched the requested programming data).

Once ICSP Write Inhibit is activated, it is not possible for a device executing in Debug mode to erase/write Flash, nor can a debug tool switch the device to Production mode. ICSP Write Inhibit should therefore only be activated on devices programmed for production.

The JTAG port, when enabled, can be used to map ICSP signals to JTAG I/O pins. All Flash erase/programming operations, initiated via the JTAG port, will therefore also be blocked after activating ICSP Write Inhibit.

5.5.1 ACTIVATING ICSP WRITE INHIBIT

Caution: It is not possible to deactivate ICSP Write Inhibit.

ICSP Write Inhibit is activated by executing a pair of NVMCON double-word programming commands to save two 16-bit activation values in the configuration memory space. The target NVM addresses and values required for activation are shown in Table 5-1. Once both addresses contain their activation values, ICSP Write Inhibit will take permanent effect on the next device Reset. Neither address can be reset, erased or otherwise modified, through any means, after being successfully programmed, even if one of the addresses has not been programmed.

Only the lower 16 data bits stored at the activation addresses are evaluated; the upper eight bits and second 24-bit word written by the double-word programming (NVMOP[3:0]) should be written as '`0`'s. The addresses can be programmed in any order and also during separate ICSP/Enhanced ICSP/RTSP sessions, but any attempt to program an incorrect 16-bit value or use a row programming operation to program the values will be aborted without altering the existing data.

TABLE 5-1: ICSP™ WRITE INHIBIT ACTIVATION ADDRESSES AND DATA

	Configuration Memory Address	ICSP™ Write Inhibit Activation Value
Write Lock 1	0x801030	`0x006D63`
Write Lock 2	0x801034	`0x006870`

NOTES:

© 2018-2019 Microchip Technology Inc.

6.0 RESETS

Note 1: This data sheet summarizes the features of the dsPIC33CK64MP105 family of devices. It is not intended to be a comprehensive reference source. To complement the information in this data sheet, refer to **"Reset"** (www.microchip.com/DS70602) in the *"dsPIC33/PIC24 Family Reference Manual"*.

2: Some registers and associated bits described in this section may not be available on all devices.

The Reset module combines all Reset sources and controls the device Master Reset Signal, $\overline{\text{SYSRST}}$. The following is a list of device Reset sources:

- POR: Power-on Reset
- BOR: Brown-out Reset
- $\overline{\text{MCLR}}$: Master Clear Pin Reset
- SWR: `RESET` Instruction
- WDTO: Watchdog Timer Time-out Reset
- CM: Configuration Mismatch Reset
- TRAPR: Trap Conflict Reset
- IOPUWR: Illegal Condition Device Reset
  - Illegal Opcode Reset
  - Uninitialized W Register Reset
  - Security Reset

A simplified block diagram of the Reset module is shown in Figure 6-1.

Any active source of Reset will make the $\overline{\text{SYSRST}}$ signal active. On system Reset, some of the registers associated with the CPU and peripherals are forced to a known Reset state and some are unaffected.

Note: Refer to the specific peripheral section or **Section 4.0 "Memory Organization"** of this manual for register Reset states.

All types of device Reset set a corresponding status bit in the RCON register to indicate the type of Reset (see Register 6-1).

A POR clears all the bits, except for the BOR and POR bits (RCON[1:0]) that are set. The user application can set or clear any bit, at any time, during code execution. The RCON bits only serve as status bits. Setting a particular Reset status bit in software does not cause a device Reset to occur.

The RCON register also has other bits associated with the Watchdog Timer and device power-saving states. The function of these bits is discussed in other sections of this manual.

Note: The status bits in the RCON register should be cleared after they are read so that the next RCON register value after a device Reset is meaningful.

For all Resets, the default clock source is determined by the FNOSC[2:0] bits in the FOSCSEL Configuration register. The value of the FNOSCx bits is loaded into the NOSC[2:0] (OSCCON[10:8]) bits on Reset, which in turn, initializes the system clock.

FIGURE 6-1: RESET SYSTEM BLOCK DIAGRAM

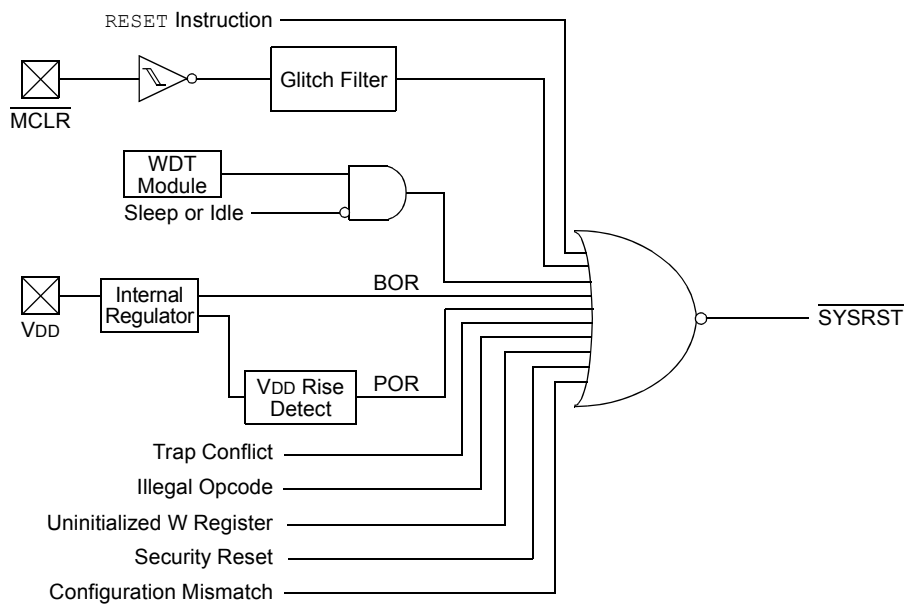

6.1 Reset Resources

Many useful resources are provided on the main product page of the Microchip website for the devices listed in this data sheet. This product page contains the latest updates and additional information.

6.1.1 KEY RESOURCES

- **"Reset"** (www.microchip.com/DS70602) in the *"dsPIC33/PIC24 Family Reference Manual"*
- Code Samples
- Application Notes
- Software Libraries
- Webinars
- All Related *"dsPIC33/PIC24 Family Reference Manual"* Sections
- Development Tools

© 2018-2019 Microchip Technology Inc.

REGISTER 6-1: RCON: RESET CONTROL REGISTER(1)

R/W-0	R/W-0	U-0	U-0	U-0	U-0	R/W-0	R/W-0
TRAPR	IOPUWR	—	—	—	—	CM	VREGS
bit 15							bit 8

R/W-1	R/W-0	r-0	R/W-0	R/W-0	R/W-0	R/W-1	R/W-1
EXTR	SWR	—	WDTO	SLEEP	IDLE	BOR	POR
bit 7							bit 0

Legend:	r = Reserved bit		
R = Readable bit	W = Writable bit	U = Unimplemented bit, read as ‘0’	
-n = Value at POR	‘1’ = Bit is set	‘0’ = Bit is cleared	x = Bit is unknown

bit 15 **TRAPR:** Trap Reset Flag bit
1 = A Trap Conflict Reset has occurred
0 = A Trap Conflict Reset has not occurred

bit 14 **IOPUWR:** Illegal Opcode or Uninitialized W Register Access Reset Flag bit
1 = An illegal opcode detection, an illegal address mode or Uninitialized W register used as an Address Pointer caused a Reset
0 = An illegal opcode or Uninitialized W Register Reset has not occurred

bit 13-10 **Unimplemented:** Read as ‘0’

bit 9 **CM:** Configuration Mismatch Flag bit
1 = A Configuration Mismatch Reset has occurred.
0 = A Configuration Mismatch Reset has not occurred

bit 8 **VREGS:** Voltage Regulator Standby During Sleep bit
1 = Voltage regulator is active during Sleep
0 = Voltage regulator goes into Standby mode during Sleep

bit 7 **EXTR:** External Reset ($\overline{\text{MCLR}}$) Pin bit
1 = A Master Clear (pin) Reset has occurred
0 = A Master Clear (pin) Reset has not occurred

bit 6 **SWR:** Software `RESET` (Instruction) Flag bit
1 = A `RESET` instruction has been executed
0 = A `RESET` instruction has not been executed

bit 5 **Reserved:** Read as ‘0’

bit 4 **WDTO:** Watchdog Timer Time-out Flag bit
1 = WDT time-out has occurred
0 = WDT time-out has not occurred

bit 3 **SLEEP:** Wake-up from Sleep Flag bit
1 = Device has been in Sleep mode
0 = Device has not been in Sleep mode

bit 2 **IDLE:** Wake-up from Idle Flag bit
1 = Device has been in Idle mode
0 = Device has not been in Idle mode

bit 1 **BOR:** Brown-out Reset Flag bit
1 = A Brown-out Reset has occurred
0 = A Brown-out Reset has not occurred

bit 0 **POR:** Power-on Reset Flag bit
1 = A Power-on Reset has occurred
0 = A Power-on Reset has not occurred

Note 1: All of the Reset status bits can be set or cleared in software. Setting one of these bits in software does not cause a device Reset.

NOTES:

© 2018-2019 Microchip Technology Inc.

7.0 INTERRUPT CONTROLLER

Note 1: This data sheet summarizes the features of the dsPIC33CK64MP105 family of devices. It is not intended to be a comprehensive reference source. To complement the information in this data sheet, refer to **"Interrupts"** (www.microchip.com/DS70000600) in the *"dsPIC33/PIC24 Family Reference Manual"*.

2: Some registers and associated bits described in this section may not be available on all devices.

The dsPIC33CK64MP105 family interrupt controller reduces the numerous peripheral interrupt request signals to a single interrupt request signal to the dsPIC33CK64MP105 family CPU.

The interrupt controller has the following features:

- Six Processor Exceptions and Software Traps
- Seven User-Selectable Priority Levels
- Interrupt Vector Table (IVT) with a Unique Vector for each Interrupt or Exception Source
- Fixed Priority within a Specified User Priority Level
- Fixed Interrupt Entry and Return Latencies
- Alternate Interrupt Vector Table (AIVT) for Debug Support

7.1 Interrupt Vector Table

The dsPIC33CK64MP105 family Interrupt Vector Table (IVT), shown in Figure 7-1, resides in program memory, starting at location, 000004h. The IVT contains six non-maskable trap vectors and up to 246 sources of interrupts. In general, each interrupt source has its own vector. Each interrupt vector contains a 24-bit wide address. The value programmed into each interrupt vector location is the starting address of the associated Interrupt Service Routine (ISR).

Interrupt vectors are prioritized in terms of their natural priority. This priority is linked to their position in the vector table. Lower addresses generally have a higher natural priority. For example, the interrupt associated with Vector 0 takes priority over interrupts at any other vector address.

7.1.1 ALTERNATE INTERRUPT VECTOR TABLE

The Alternate Interrupt Vector Table (AIVT), shown in Figure 7-2, is available only when the Boot Segment (BS) is defined and the AIVT has been enabled. To enable the Alternate Interrupt Vector Table, the Configuration bits, BSEN and AIVTDIS in the FSEC register, must be programmed, and the AIVTEN bit must be set (INTCON2[8] = `1`). When the AIVT is enabled, all interrupt and exception processes use the alternate vectors instead of the default vectors. The AIVT begins at the start of the last page of the Boot Segment, defined by BSLIM[12:0]. The second half of the page is no longer usable space. The Boot Segment must be at least two pages to enable the AIVT.

Note: Although the Boot Segment must be enabled in order to enable the AIVT, application code does not need to be present inside of the Boot Segment. The AIVT (and IVT) will inherit the Boot Segment code protection.

The AIVT supports debugging by providing a means to switch between an application and a support environment without requiring the interrupt vectors to be reprogrammed. This feature also enables switching between applications for evaluation of different software algorithms at run time.

7.2 Reset Sequence

A device Reset is not a true exception because the interrupt controller is not involved in the Reset process. The dsPIC33CK64MP105 family devices clear their registers in response to a Reset, which forces the PC to zero. The device then begins program execution at location, 0x000000. A `GOTO` instruction at the Reset address can redirect program execution to the appropriate start-up routine.

Note: Any unimplemented or unused vector locations in the IVT should be programmed with the address of a default interrupt handler routine that contains a `RESET` instruction.

FIGURE 7-1: dsPIC33CK64MP105 FAMILY INTERRUPT VECTOR TABLE

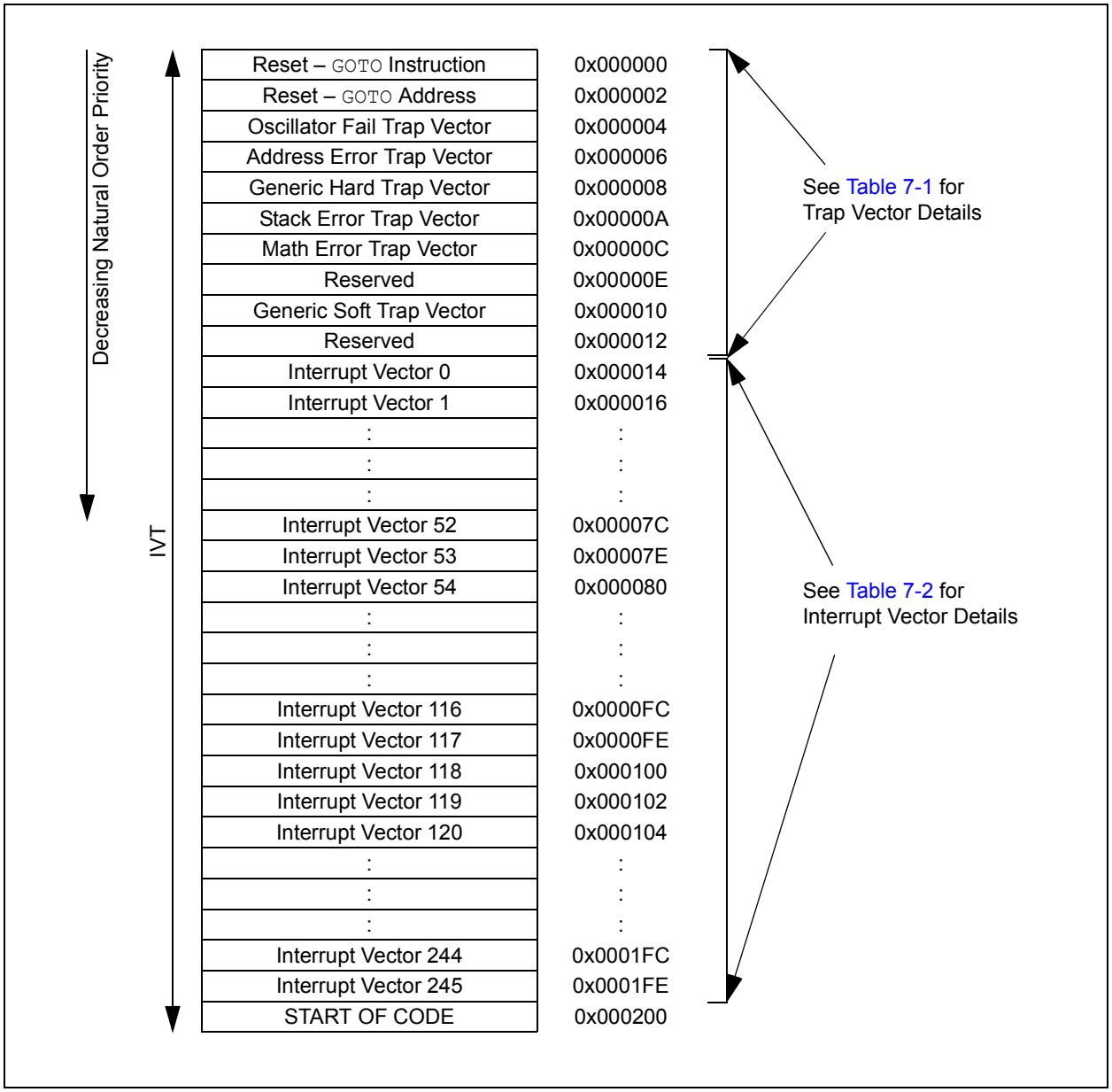

© 2018-2019 Microchip Technology Inc.

FIGURE 7-2: dsPIC33CK64MP105 ALTERNATE INTERRUPT VECTOR TABLE

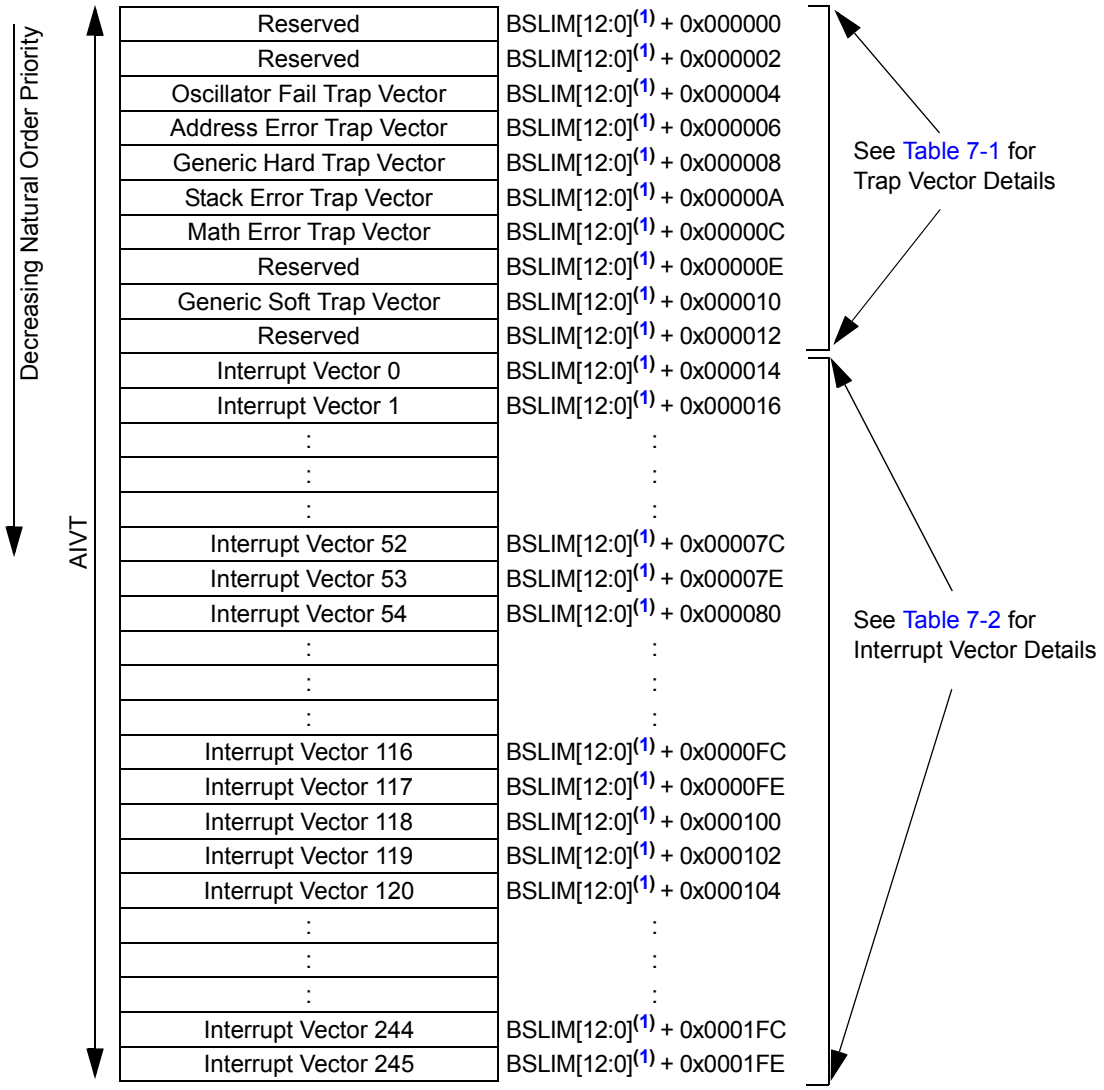

Note 1: The address depends on the size of the Boot Segment defined by BSLIM[12:0]: [(BSLIM[12:0] – 1) x 0x800] + Offset.

TABLE 7-1: TRAP VECTOR DETAILS

Trap Description	MPLAB® XC16 Trap ISR Name	IVT Address	Trap Bit Location			Priority
			Interrupt Flag	Type	Enable	
Oscillator Failure	_OscillatorFail	0x000004	INTCON1[1]	—	—	15
Address Error	_AddressError	0x000006	INTCON1[3]	—	—	14
ECC Double-Bit Error	_HardTrapError	0x000008	INTCON4[1]	—	—	13
Software Generated Trap	_HardTrapError	0x000008	INTCON4[0]	—	INTCON2[13]	13
Stack Error	_StackError	0x00000A	INTCON1[2]	—	—	12
Overflow Accumulator A	_MathError	0x00000C	INTCON1[4]	INTCON1[14]	INTCON1[10]	11
Overflow Accumulator B	_MathError	0x00000C	INTCON1[4]	INTCON1[13]	INTCON1[9]	11
Catastrophic Overflow Accumulator A	_MathError	0x00000C	INTCON1[4]	INTCON1[12]	INTCON1[8]	11
Catastrophic Overflow Accumulator B	_MathError	0x00000C	INTCON1[4]	INTCON1[11]	INTCON1[8]	11
Shift Accumulator Error	_MathError	0x00000C	INTCON1[4]	INTCON1[7]	INTCON1[8]	11
Divide-by-Zero Error	_MathError	0x00000C	INTCON1[4]	INTCON1[6]	INTCON1[8]	11
Reserved	Reserved	0x00000E	—	—	—	—
NVM Address Error	_SoftTrapError	0x000010	INTCON3[8]	—	—	9
DO Stack Overflow	_SoftTrapError	0x000010	INTCON3[4]	—	—	9
APLL Loss of Lock	_SoftTrapError	0x000010	INTCON3[0]	—	—	9
Reserved	Reserved	0x000012	—	—	—	—

© 2018-2019 Microchip Technology Inc.

TABLE 7-2: INTERRUPT VECTOR DETAILS

Interrupt Source	MPLAB® XC16 ISR Name	Vector #	IRQ #	IVT Address	Interrupt Bit Location		
					Flag	Enable	Priority
External Interrupt 0	_INT0Interrupt	8	0	0x000014	IFS0[0]	IEC0[0]	IPC0[2:0]
Timer1	_T1Interrupt	9	1	0x000016	IFS0[1]	IEC0[1]	IPC0[6:4]
Change Notice Interrupt A	_CNAInterrupt	10	2	0x000018	IFS0[2]	IEC0[2]	IPC0[10:8]
Change Notice Interrupt B	_CNBInterrupt	11	3	0x00001A	IFS0[3]	IEC0[3]	IPC0[14:12]
DMA Channel 0	_DMA0Interrupt	12	4	0x00001C	IFS0[4]	IEC0[4]	IPC1[2:0]
Reserved	Reserved	13	5	0x00001E	—	—	—
Input Capture/Output Compare 1	_CCP1Interrupt	14	6	0x000020	IFS0[6]	IEC0[6]	IPC1[10:8]
CCP1 Timer	_CCT1Interrupt	15	7	0x000022	IFS0[7]	IEC0[7]	IPC1[14:12]
DMA Channel 1	_DMA1Interrupt	16	8	0x000024	IFS0[8]	IEC0[8]	IPC2[2:0]
SPI1 Receiver	_SPI1RXInterrupt	17	9	0x000026	IFS0[9]	IEC0[9]	IPC2[6:4]
SPI1 Transmitter	_SPI1TXInterrupt	18	10	0x000028	IFS0[10]	IEC0[10]	IPC2[10:8]
UART1 Receiver	_U1RXInterrupt	19	11	0x00002A	IFS0[11]	IEC0[11]	IPC2[14:12]
UART1 Transmitter	_U1TXInterrupt	20	12	0x00002C	IFS0[12]	IEC0[12]	IPC3[2:0]
ECC Single-Bit Error	_ECCSBEInterrupt	21	13	0x00002E	IFS0[13]	IEC0[13]	IPC3[6:4]
NVM Write Complete	_NVMInterrupt	22	14	0x000030	IFS0[14]	IEC0[14]	IPC3[10:8]
External Interrupt 1	_INT1Interrupt	23	15	0x000032	IFS0[15]	IEC0[15]	IPC3[14:12]
I2C1 Slave Event	_SI2C1Interrupt	24	16	0x000034	IFS1[0]	IEC1[0]	IPC4[2:0]
I2C1 Master Event	_MI2C1Interrupt	25	17	0x000036	IFS1[1]	IEC1[1]	IPC4[6:4]
DMA Channel 2	_DMA2Interrupt	26	18	0x000038	IFS1[2]	IEC1[2]	IPC4[10:8]
Change Notice Interrupt C	_CNCInterrupt	27	19	0x00003A	IFS1[3]	IEC1[3]	IPC4[14:12]
External Interrupt 2	_INT2Interrupt	28	20	0x00003C	IFS1[4]	IEC1[4]	IPC5[2:0]
DMA Channel 3	_DMA3Interrupt	29	21	0x00003E	IFS1[5]	IEC1[5]	IPC5[6:4]
Reserved	Reserved	30	22	0x000040	—	—	—
Input Capture/Output Compare 2	_CCP2Interrupt	31	23	0x000042	IFS1[7]	IEC1[7]	IPC5[14:12]
CCP2 Timer	_CCT2Interrupt	32	24	0x000044	IFS1[8]	IEC1[8]	IPC6[2:0]
Reserved	Reserved	33	25	0x000046	—	—	—
External Interrupt 3	_INT3Interrupt	34	26	0x000048	IFS1[10]	IEC1[10]	IPC6[10:8]
U2RX – UART2 Receiver	_U2RXInterrupt	35	27	0x00004A	IFS1[11]	IEC1[11]	IPC6[14:12]
U2TX – UART2 Transmitter	_U2TXInterrupt	36	28	0x00004C	IFS1[12]	IEC1[12]	IPC7[2:0]
SPI2 Receiver	_SPI2RXInterrupt	37	29	0x00004E	IFS1[13]	IEC1[13]	IPC7[6:4]
SPI2 Transmitter	_SPI2TXInterrupt	38	30	0x000050	IFS1[14]	IEC1[14]	IPC7[10:8]
Reserved	Reserved	39-42	31-34	0x000052-0x000058	—	—	—
Input Capture/Output Compare 3	_CCP3Interrupt	43	35	0x00005A	IFS2[3]	IEC2[3]	IPC8[14:12]
CCP3 Timer	_CCT3Interrupt	44	36	0x00005C	IFS2[4]	IEC2[4]	IPC9[2:0]
I2C2 Slave Event	_SI2C2Interrupt	45	37	0x00005E	IFS2[5]	IEC2[5]	IPC9[6:4]
I2C2 Master Event	_MI2C2Interrupt	46	38	0x000060	IFS2[6]	IEC2[6]	IPC9[10:8]
Reserved	Reserved	47	39	0x000062	—	—	—
Input Capture/Output Compare 4	_CCP4Interrupt	48	40	0x000064	IFS2[8]	IEC2[8]	IPC10[2:0]
CCP4 Timer	_CCT4Interrupt	49	41	0x000066	IFS2[9]	IEC2[9]	IPC10[6:4]
Reserved	Reserved	50	42	0x000068	—	—	—
Input Capture/Output Compare 5	_CCP5Interrupt	51	43	0x00006A	IFS2[11]	IEC2[11]	IPC10[14:12]
CCP5 Timer	_CCT5Interrupt	52	44	0x00006C	IFS2[12]	IEC2[12]	IPC11[2:0]
Deadman Timer	_DMTInterrupt	53	45	0x00006E	IFS2[13]	IEC2[13]	IPC11[6:4]
Reserved	Reserved	54-55	46-47	0x000070-0x000072	—	—	—

TABLE 7-2: INTERRUPT VECTOR DETAILS (CONTINUED)

Interrupt Source	MPLAB® XC16 ISR Name	Vector #	IRQ #	IVT Address	Interrupt Bit Location		
					Flag	Enable	Priority
QEI Position Counter Compare	_QEI1Interrupt	56	48	0x000074	IFS3[0]	IEC3[0]	IPC12[2:0]
UART1 Error	_U1EInterrupt	57	49	0x000076	IFS3[1]	IEC3[1]	IPC12[6:4]
UART2 Error	_U2EInterrupt	58	50	0x000078	IFS3[2]	IEC3[2]	IPC12[10:8]
CRC Generator	_CRCInterrupt	59	51	0x00007A	IFS3[3]	IEC3[3]	IPC12[14:12]
Reserved	Reserved	60-61	52-53	0x00007C-0x00007E	—	—	—
QEI Position Counter Compare	_QEI2Interrupt	62	54	0x000080	IFS3[6]	IEC3[6]	IPC13[10:8]
Reserved	Reserved	63	55	0x000082	—	—	—
UART3 Error	_U3EInterrupt	64	56	0x000084	IFS3[8]	IEC3[8]	IPC14[2:0]
UART3 Receiver	_U3RXInterrupt	65	57	0x000086	IFS3[9]	IEC3[9]	IPC14[6:4]
UART3 Transmitter	_U3TXInterrupt	66	58	0x000088	IFS3[10]	IEC3[10]	IPC14[10:8]
SPI3 Receiver	_SPI3RXInterrupt	67	59	0x00008A	IFS3[11]	IEC3[11]	IPC14[14:12]
SPI3 Transmitter	_SPI3TXInterrupt	68	60	0x00008C	IFS3[12]	IEC3[12]	IPC15[2:0]
Reserved	Reserved	69-70	61-62	0x00008E-0x000090	—	—	—
PTG Step	_PTGSTEPInterrupt	71	63	0x000092	IFS3[15]	IEC3[15]	IPC15[14:12]
I2C1 Bus Collision	_I2C1BCInterrupt	72	64	0x000094	IFS4[0]	IEC4[0]	IPC16[2:0]
I2C2 Bus Collision	_I2C2BCInterrupt	73	65	0x000096	IFS4[1]	IEC4[1]	IPC16[6:4]
Reserved	Reserved	74	66	0x000098	—	—	—
PWM Generator 1	_PWM1Interrupt	75	67	0x00009A	IFS4[3]	IEC4[3]	IPC16[14:12]
PWM Generator 2	_PWM2Interrupt	76	68	0x00009C	IFS4[4]	IEC4[4]	IPC17[2:0]
PWM Generator 3	_PWM3Interrupt	77	69	0x00009E	IFS4[5]	IEC4[5]	IPC17[6:4]
PWM Generator 4	_PWM4Interrupt	78	70	0x0000A0	IFS4[6]	IEC4[6]	IPC17[10:8]
Reserved	Reserved	79-82	71-74	0x0000A2-0x0000A8	—	—	—
Change Notice D	_CNDInterrupt	83	75	0x0000AA	IFS4[11]	IEC4[11]	IPC18[14:12]
Reserved	Reserved	84	76	0x0000AC	—	—	—
Comparator 1	_CMP1Interrupt	85	77	0x0000AE	IFS4[13]	IEC4[13]	IPC19[6:4]
Comparator 2	_CMP2Interrupt	86	78	0x0000B0	IFS4[14]	IEC4[14]	IPC19[10:8]
Comparator 3	_CMP3Interrupt	87	79	0x0000B2	IFS4[15]	IEC4[15]	IPC19[14:12]
Reserved	Reserved	88	80	0x0000B4	—	—	—
PTG Watchdog Timer Time-out	_PTGWDTInterrupt	89	81	0x0000B6	IFS5[1]	IEC5[1]	IPC20[6:4]
PTG Trigger 0	_PTG0Interrupt	90	82	0x0000B8	IFS5[2]	IEC5[2]	IPC20[10:8]
PTG Trigger 1	_PTG1Interrupt	91	83	0x0000BA	IFS5[3]	IEC5[3]	IPC20[14:12]
PTG Trigger 2	_PTG2Interrupt	92	84	0x0000BC	IFS5[4]	IEC5[4]	IPC21[2:0]
PTG Trigger 3	_PTG3Interrupt	93	85	0x0000BE	IFS5[5]	IEC5[6]	IPC21[6:4]
SENT1 TX/RX	_SENT1Interrupt	94	86	0x0000C0	IFS5[6]	IEC5[6]	IPC21[10:8]
SENT1 Error	_SENT1EInterrupt	95	87	0x0000C2	IFS5[7]	IEC5[7]	IPC21[14:12]
SENT2 TX/RX	_SENT2Interrupt	96	88	0x0000C4	IFS5[8]	IEC5[8]	IPC22[2:0]
SENT2 Error	_SENT2EInterrupt	97	89	0x0000C6	IFS5[9]	IEC5[9]	IPC22[6:4]
ADC Global Interrupt	_ADCInterrupt	98	90	0x0000C8	IFS5[10]	IEC5[10]	IPC22[10:8]

© 2018-2019 Microchip Technology Inc.

TABLE 7-2: INTERRUPT VECTOR DETAILS (CONTINUED)

Interrupt Source	MPLAB® XC16 ISR Name	Vector #	IRQ #	IVT Address	Interrupt Bit Location		
					Flag	Enable	Priority
ADC AN0 Interrupt	_ADCAN0Interrupt	99	91	0x0000CA	IFS5[11]	IEC5[11]	IPC22[14:12]
ADC AN1 Interrupt	_ADCAN1Interrupt	100	92	0x0000CC	IFS5[12]	IEC5[12]	IPC23[2:0]
ADC AN2 Interrupt	_ADCAN2Interrupt	101	93	0x0000CE	IFS5[13]	IEC5[13]	IPC23[6:4]
ADC AN3 Interrupt	_ADCAN3Interrupt	102	94	0x0000D0	IFS5[14]	IEC5[14]	IPC23[10:8]
ADC AN4 Interrupt	_ADCAN4Interrupt	103	95	0x0000D2	IFS5[15]	IEC5[15]	IPC23[14:12]
ADC AN5 Interrupt	_ADCAN5Interrupt	104	96	0x0000D4	IFS6[0]	IEC6[0]	IPC24[2:0]
ADC AN6 Interrupt	_ADCAN6Interrupt	105	97	0x0000D6	IFS6[1]	IEC6[1]	IPC24[6:4]
ADC AN7 Interrupt	_ADCAN7Interrupt	106	98	0x0000D8	IFS6[2]	IEC6[2]	IPC24[10:8]
ADC AN8 Interrupt	_ADCAN8Interrupt	107	99	0x0000DA	IFS6[3]	IEC6[3]	IPC24[14:12]
ADC AN9 Interrupt	_ADCAN9Interrupt	108	100	0x0000DC	IFS6[4]	IEC6[4]	IPC25[2:0]
ADC AN10 Interrupt	_ADCAN10Interrupt	109	101	0x0000DE	IFS6[5]	IEC6[5]	IPC25[6:4]
ADC AN11 Interrupt	_ADCAN11Interrupt	110	102	0x0000E0	IFS6[6]	IEC6[6]	IPC25[10:8]
ADC AN12 Interrupt	_ADCAN12Interrupt	111	103	0x0000E2	IFS6[7]	IEC6[7]	IPC25[14:12]
ADC AN13 Interrupt	_ADCAN13Interrupt	112	104	0x0000E4	IFS6[8]	IEC6[8]	IPC26[2:0]
ADC AN14 Interrupt	_ADCAN14Interrupt	113	105	0x0000E6	IFS6[9]	IEC6[9]	IPC26[6:4]
ADC AN15 Interrupt	_ADCAN15Interrupt	114	106	0x0000E8	IFS6[10]	IEC6[10]	IPC26[10:8]
ADC AN16 Interrupt	_ADCAN16Interrupt	115	107	0x0000EA	IFS6[11]	IEC6[11]	IPC26[14:12]
ADC AN17 Interrupt	_ADCAN17Interrupt	116	108	0x0000EC	IFS6[12]	IEC6[12]	IPC27[2:0]
ADC AN18 Interrupt	_ADCAN18Interrupt	117	109	0x0000EE	IFS6[13]	IEC6[13]	IPC27[6:4]
ADC AN19 Interrupt	_ADCAN19Interrupt	118	110	0x0000F0	IFS6[14]	IEC6[14]	IPC27[10:8]
ADC AN20 Interrupt	_ADCAN20Interrupt	119	111	0x0000F2	IFS6[15]	IEC6[15]	IPC27[14:12]
Reserved		120-123	112-115	0x0000F4-0x0000FA	—	—	—
ADC Digital Comparator 0	_ADCMP0Interrupt	124	116	0x0000FC	IFS7[4]	IEC7[4]	IPC29[2:0]
ADC Digital Comparator 1	_ADCMP1Interrupt	125	117	0x0000FE	IFS7[5]	IEC7[5]	IPC29[6:4]
ADC Digital Comparator 2	_ADCMP2Interrupt	126	118	0x000100	IFS7[6]	IEC7[6]	IPC29[10:8]
ADC Digital Comparator 3	_ADCMP3Interrupt	127	119	0x000102	IFS7[7]	IEC7[7]	IPC29[14:12]
ADC Oversample Filter 0	_ADFLTR0Interrupt	128	120	0x000104	IFS7[8]	IEC7[8]	IPC30[2:0]
ADC Oversample Filter 1	_ADFLTR1Interrupt	129	121	0x000106	IFS7[9]	IEC7[9]	IPC30[6:4]
ADC Oversample Filter 2	_ADFLTR2Interrupt	130	122	0x000108	IFS7[10]	IEC7[10]	IPC30[10:8]
ADC Oversample Filter 3	_ADFLTR3Interrupt	131	123	0x00010A	IFS7[11]	IEC7[11]	IPC30[14:12]
CLC1 Positive Edge	_CLC1PInterrupt	132	124	0x00010C	IFS7[12]	IEC7[12]	IPC31[2:0]
CLC2 Positive Edge	_CLC2PInterrupt	133	125	0x00010E	IFS7[13]	IEC7[13]	IPC31[6:4]
SPI1 Error	_SPI1Interrupt	134	126	0x000110	IFS7[14]	IEC7[14]	IPC31[10:8]
SPI2 Error	_SPI2Interrupt	135	127	0x000112	IFS7[15]	IEC7[15]	IPC31[14:12]
SPI3 Error	_SPI3Interrupt	136	128	0x000114	IFS8[0]	IEC8[0]	IPC32[2:0]
Reserved	Reserved	137-176	129-168	0x000116-0x000164	—	—	—
PEVTA – PWM Event A	_PEVTAInterrupt	177	169	0x000166	IFS10[9]	IEC10[9]	IPC42[6:4]
PEVTB – PWM Event B	_PEVTBInterrupt	178	170	0x000168	IFS10[10]	IEC10[10]	IPC42[10:8]
PEVTC – PWM Event C	_PEVTCInterrupt	179	171	0x00016A	IFS10[11]	IEC10[11]	IPC42[14:12]
PEVTD – PWM Event D	_PEVTDInterrupt	180	172	0x00016C	IFS10[12]	IEC10[12]	IPC43[2:0]
PEVTE – PWM Event E	_PEVTEInterrupt	181	173	0x00016E	IFS10[13]	IEC10[13]	IPC43[6:4]
PEVTF – PWM Event F	_PEVTFInterrupt	182	174	0x000170	IFS10[14]	IEC10[14]	IPC43[10:8]

TABLE 7-2: INTERRUPT VECTOR DETAILS (CONTINUED)

Interrupt Source	MPLAB® XC16 ISR Name	Vector #	IRQ #	IVT Address	Interrupt Bit Location		
					Flag	Enable	Priority
CLC3 Positive Edge	_CLC3PInterrupt	183	175	0x000172	IFS10[15]	IEC10[15]	IPC43[14:12]
CLC4 Positive Edge	_CLC4PInterrupt	184	176	0x000174	IFS11[0]	IEC11[0]	IPC44[2:0]
CLC1 Negative Edge	_CLC1NInterrupt	185	177	0x000176	IFS11[1]	IEC11[1]	IPC44[6:4]
CLC2 Negative Edge	_CLC2NInterrupt	186	178	0x000178	IFS11[2]	IEC11[2]	IPC44[10:8]
CLC3 Negative Edge	_CLC3NInterrupt	187	179	0x00017A	IFS11[3]	IEC11[3]	IPC44[14:]12]
CLC4 Negative Edge	_CLC4NInterrupt	188	180	0x00017C	IFS11[4]	IEC11[4]	IPC45[2:0]
Reserved	Reserved	189-196	181-188	0x0017E-0x0018C	—	—	—
UART1 Event	_U1EVTInterrupt	197	189	0x00018E	IFS11[13]	IF2C11[13]	IPC47[6:4]
UART2 Event	_U2EVTInterrupt	198	190	0x000190	IFS11[14]	IF2C11[14]	IPC47[12:8]
UART3 Event	_U3EVTInterrupt	199	191	0x000192	IFS11[15]	IF2C11[15]	IPC47[14:12]
Reserved	Reserved	200-255	192-247	0x000194-0x0001FE	—	—	—

© 2018-2019 Microchip Technology Inc.

TABLE 7-3: INTERRUPT FLAG REGISTERS

Register	Address	Bit 15	Bit14	Bit 13	Bit 12	Bit 11	Bit 10	Bit 9	Bit 8	Bit 7	Bit 6	Bit 5	Bit 4	Bit 3	Bit 2	Bit 1	Bit 0
IFS0	800h	INT1IF	NVMIF	ECCSBEIF	U1TXIF	U1RXIF	SPI1TXIF	SPI1RXIF	DMA1IF	CCT1IF	CCP1IF	—	DMA0IF	CNBIF	CNAIF	T1IF	INT0IF
IFS1	802h	—	SPI2TXIF	SPI2RXIF	U2TXIF	U2RXIF	INT3IF	—	CCT2IF	CCP2IF	—	DMA3IF	INT2IF	CNCIF	DMA2IF	MI2C1IF	SI2C1IF
IFS2	804h	—	—	DMTIF	CCT5IF	CCP5IF	—	CCT4IF	CCP4IF	—	MI2C2IF	SI2C2IF	CCT3IF	CCP3IF	—	—	—
IFS3	806h	PTGSTEPIF	—	—	SPI3TXIF	SPI3RXIF	U3TXIF	U3RXIF	U3EIF	—	QEI2IF	—	—	CRCIF	U2EIF	U1EIF	QEI1IF
IFS4	808h	CMP3IF	CMP2IF	CMP1IF	—	CNDIF	—	—	—	—	PWM4IF	PWM3IF	PWM2IF	PWM1IF	—	I2C2BCIF	I2C1BCIF
IFS5	80Ah	ADCAN4IF	ADCAN3IF	ADCAN2IF	ADCAN1IF	ADCAN0IF	ADCIF	SENT2EIF	SENT2IF	SENT1EIF	SENT1IF	PTG3IF	PTG2IF	PTG1IF	PTG0IF	PTGWDTIF	—
IFS6	80Ch	ADCAN20IF	ADCAN19IF	ADCAN18IF	ADCAN17IF	ADCAN16IF	ADCAN15IF	ADCAN14IF	ADCAN13IF	ADCAN12IF	ADCAN11IF	ADCAN10IF	ADCAN9IF	ADCAN8IF	ADCAN7IF	ADCAN6IF	ADCAN5IF
IFS7	80Eh	SPI2GIF	SPI1GIF	CLC2PIF	CLC1PIF	ADFLTR3IF	ADFLTR2IF	ADFLTR1IF	ADFLTR0IF	ADCMP3IF	ADCMP2IF	ADCMP1IF	ADCMP0IF	—	—	—	—
IFS8	810h	—	—	—	—	—	—	—	—	—	—	—	—	—	—	—	SPI3GIF
IFS10	814h	CLC3PIF	PEVTFIF	PEVTEIF	PEVTDIF	PEVTCIF	PEVTBIF	PEVTAIF	—	—	—	—	—	—	—	—	—
IFS11	816h	U3EVTIF	U2EVTIF	U1EVTIF	—	—	—	—	—	—	—	—	CLC4NIF	CLC3NIF	CLC2NIF	CLC1NIF	CLC4PIF

Legend: — = Unimplemented.

TABLE 7-4: INTERRUPT ENABLE REGISTERS

Register	Address	Bit 15	Bit14	Bit 13	Bit 12	Bit 11	Bit 10	Bit 9	Bit 8	Bit 7	Bit 6	Bit 5	Bit 4	Bit 3	Bit 2	Bit 1	Bit 0
IEC0	820h	INT1IE	NVMIE	ECCSBEIE	U1TXIE	U1RXIE	SPI1TXIE	SPI1RXIE	DMA1IE	CCT1IE	CCP1IE	—	DMA0IE	CNBIE	CNAIE	T1IE	INT0IE
IEC1	822h	—	SPI2TXIE	SPI2RXIE	U2TXIE	U2RXIE	INT3IE	—	CCT2IE	CCP2IE	—	DMA3IE	INT2IE	CNCIE	DMA2IE	MI2C1IE	SI2C1IE
IEC2	824h	—	—	DMTIE	CCT5IE	CCP5IE	—	CCT4IE	CCP4IE	—	MI2C2IE	SI2C2IE	CCT3IE	CCP3IE	—	—	—
IEC3	826h	PTGSTEPIE	—	—	SPI3TXIE	SPI3RXIE	U3TXIE	U3RXIE	U3EIE	—	QEI2IE	—	—	CRCIE	U2EIE	U1EIE	QEI1IE
IEC4	828h	CMP3IE	CMP2IE	CMP1IE	—	CNDIE	—	—	—	—	PWM4IE	PWM3IE	PWM2IE	PWM1IE	—	I2C2BCIE	I2C1BCIE
IEC5	82Ah	ADCAN4IE	ADCAN3IE	ADCAN2IE	ADCAN1IE	ADCAN0IE	ADCIE	SENT2EIE	SENT2IE	SENT1EIE	SENT1IE	PTG3IE	PTG2IE	PTG1IE	PTG0IE	PTGWDTIE	—
IEC6	82Ch	ADCAN20IE	ADCAN19IE	ADCAN18IE	ADCAN17IE	ADCAN16IE	ADCAN15IE	ADCAN14IE	ADCAN13IE	ADCAN12IE	ADCAN11IE	ADCAN10IE	ADCAN9IE	ADCAN8IE	ADCAN7IE	ADCAN6IE	ADCAN5IE
IEC7	82Eh	SPI2GIE	SPI1GIE	CLC2PIE	CLC1PIE	ADFLTR3IE	ADFLTR2IE	ADFLTR1IE	ADFLTR0IE	ADCMP3IE	ADCMP2IE	ADCMP1IE	ADCMP0IE	—	—	—	—
IEC8	830h	—	—	—	—	—	—	—	—	—	—	—	—	—	—	—	SPI3GIE
IEC10	834h	CLC3PIE	PEVTFIE	PEVTEIE	PEVTDIE	PEVTCIE	PEVTBIE	PEVTAIE	—	—	—	—	—	—	—	—	—
IEC11	836h	U3EVTIE	U2EVTIE	U1EVTIE	—	—	—	—	—	—	—	—	CLC4NIE	CLC3NIE	CLC2NIE	CLC1NIE	CLC4PIE

Legend: — = Unimplemented.

© 2018-2019 Microchip Technology Inc.

TABLE 7-5: INTERRUPT PRIORITY REGISTERS

Register	Address	Bit 15	Bit14	Bit 13	Bit 12	Bit 11	Bit 10	Bit 9	Bit 8	Bit 7	Bit 6	Bit 5	Bit 4	Bit 3	Bit 2	Bit 1	Bit 0
IPC0	840h	—	CNBIP2	CNBIP1	CNBIP0	—	CNAIP2	CNAIP1	CNAIP0	—	T1IP2	T1IP1	T1IP0	—	INT0IP2	INT0IP1	INT0IP0
IPC1	842h	—	CCT1IP2	CCT1IP1	CCT1IP0	—	CCP1IP2	CCP1IP1	CCP1IP0	—	—	—	—	—	DMA0IP2	DMA0IP1	DMA0IP0
IPC2	844h	—	U1RXIP2	U1RXIP1	U1RXIP0	—	SPI1TXIP2	SPI1TXIP1	SPI1TXIP0	—	SPI1RXIP2	SPI1RXIP1	SPI1RXIP0	—	DMA1IP2	DMA1IP1	DMA1IP0
IPC3	846h	—	INT1IP2	INT1IP1	INT1IP0	—	NVMIP2	NVMIP1	NVMIP0	—	ECCSBEIP2	ECCSBEIP1	ECCSBEIP0	—	U1TXIP2	U1TXIP1	U1TXIP0
IPC4	848h	—	CNCIP2	CNCIP1	CNCIP0	—	DMA2IP2	DMA2IP1	DMA2IP0	—	MI2C1IP2	MI2C1IP1	MI2C1IP0	—	SI2C1IP2	SI2C1IP1	SI2C1IP0
IPC5	84Ah	—	CCP2IP2	CCP2IP1	CCP2IP0	—	—	—	—	—	DMA3IP2	DMA3IP1	DMA3IP20	—	INT2IP2	INT2IP1	INT2IP0
IPC6	84Ch	—	U2RXIP2	U2RXIP1	U2RXIP0	—	INT3IP2	INT3IP1	INT3IP0	—	—	—	—	—	CCT2IP2	CCT2IP1	CCT2IP0
IPC7	84Eh	—	—	—	—	—	SPI2TXIP2	SPI2TXIP1	SPI2TXIP0	—	SPI2RXIP2	SPI2RXIP1	SPI2RXIP0	—	U2TXIP2	U2TXIP1	U2TXIP0
IPC8	850h	—	CCP3IP2	CCP3IP1	CCP3IP0	—	—	—	—	—	—	—	—	—	—	—	—
IPC9	852h	—	—	—	—	—	MI2C2IP2	MI2C2IP1	MI2C2IP0	—	SI2C2IP2	SI2C2IP1	SI2C2IP0	—	CCT3IP2	CCT3IP1	CCT3IP0
IPC10	854h	—	CCP5IP2	CCP5IP1	CCP5IP0	—	—	—	—	—	CCT4IP2	CCT4IP1	CCT4IP0	—	CCP4IP2	CCP4IP1	CCP4IP0
IPC11	856h	—	—	—	—	—	—	—	—	—	DMTIP2	DMTIP1	DMTIP0	—	CCT5IP2	CCT5IP1	CCT5IP0
IPC12	858h	—	CRCIP2	CRCIP1	CRCIP0	—	U2EIP2	U2EIP1	U2EIP0	—	U1EIP2	U1EIP1	U1EIP0	—	QEI1IP2	QEI1IP1	QEI1IP0
IPC13	85Ah	—	—	—	—	—	QEI2IP2	QEI2IP1	QEI2IP0	—	—	—	—	—	—	—	—
IPC14	85Ch	—	SPI3RXIP2	SPI3RXIP1	SPI3RXIP0	—	U3TXIP2	U3TXIP1	U3TXIP1	—	U3RXIP2	U3RXIP1	U3RXIP0	—	U3EIP2	U3EIP1	U3EIP0
IPC15	85Eh	—	PTGSTEPIP2	PTGSTEPIP1	PTGSTEPIP0	—	—	—	—	—	—	—	—	—	SPI3TXIP2	SPI3TXIP1	SPI3TXIP0
IPC16	860h	—	PWM1IP2	PWM1IP1	PWM1IP0	—	—	—	—	—	I2C2BCIP2	I2C2BCIP1	I2C2BCIP0	—	I2C1BCIP2	I2C1BCIP1	I2C1BCIP0
IPC17	862h	—	—	—	—	—	PWM4IP2	PWM4IP1	PWM4IP0	—	PWM3IP2	PWM3IP1	PWM3IP0	—	PWM2IP2	PWM2IP1	PWM2IP0
IPC18	864h	—	CNDIP2	CNDIP1	CNDIP0	—	—	—	—	—	—	—	—	—	—	—	—
IPC19	866h	—	CMP3IP2	CMP3IP1	CMP3IP0	—	CMP2IP2	CMP2IP1	CMP2IP0	—	CMP1IP2	CMP1IP1	CMP1IP0	—	—	—	—
IPC20	868h	—	PTG1IP2	PTG1IP1	PTG1IP0	—	PTG0IP2	PTG0IP1	PTG0IP0	—	PTGWDTIP2	PTGWDTIP1	PTGWDTIP0	—	—	—	—
IPC21	86Ah	—	SENT1EIP2	SENT1EIP1	SENT1EIP0	—	SENT1IP2	SENT1IP1	SENT1IP0	—	PTG3IP2	PTG3IP1	PTG3IP0	—	PTG2IP2	PTG2IP1	PTG2IP0
IPC22	86Ch	—	ADCAN0IP2	ADCAN0IP1	ADCAN0IP0	—	ADCIP2	ADCIP1	ADCIP0	—	SENT2EIP2	SENT2EIP1	SENT2EIP0	—	SENT2IP2	SENT2IP1	SENT2IP0
IPC23	86Eh	—	ADCAN4IP2	ADCAN4IP1	ADCAN4IP0	—	ADCAN3IP2	ADCAN3IP1	ADCAN3IP0	—	ADCAN2IP2	ADCAN2IP1	ADCAN2IP0	—	ADCAN1IP2	ADCAN1IP1	ADCAN1IP0
IPC24	870h	—	ADCAN8IP2	ADCAN8IP1	ADCAN8IP0	—	ADCAN7IP2	ADCAN7IP1	ADCAN7IP0	—	ADCAN6IP2	ADCAN6IP1	ADCAN6IP0	—	ADCAN5IP2	ADCAN5IP1	ADCAN5IP0
IPC25	872h	—	ADCAN12IP2	ADCAN12IP1	ADCAN12IP0	—	ADCAN11IP2	ADCAN11IP1	ADCAN11IP0	—	ADCAN10IP2	ADCAN10IP1	ADCAN10IP0	—	ADCAN9IP2	ADCAN9IP1	ADCAN9IP0
IPC26	874h	—	ADCAN16IP2	ADCAN16IP2	ADCAN16IP2	—	ADCAN15IP2	ADCAN15IP1	ADCAN15IP0	—	ADCAN14IP2	ADCAN14IP1	ADCAN14IP0	—	ADCAN13IP2	ADCAN13IP1	ADCAN13IP0
IPC27	876h	—	ADCAN20IP2	ADCAN20IP1	ADCAN20IP0	—	ADCAN19IP2	ADCAN19IP1	ADCAN19IP0	—	ADCAN18IP2	ADCAN18IP1	ADCAN18IP0	—	ADCAN17IP2	ADCAN17IP1	ADCAN17IP0
IPC29	87Ah	—	ADCMP3IP2	ADCMP3IP1	ADCMP3IP0	—	ADCMP2IP2	ADCMP2IP1	ADCMP2IP0	—	ADCMP1IP2	ADCMP1IP1	ADCMP1IP0	—	ADCMP0IP2	ADCMP0IP1	ADCMP0IP0
IPC30	87Ch	—	ADFLTR3IP2	ADFLTR3IP1	ADFLTR3IP0	—	ADFLTR2IP2	ADFLTR2IP1	ADFLTR2IP0	—	ADFLTR1IP2	ADFLTR1IP1	ADFLTR1IP0	—	ADFLTR0IP2	ADFLTR0IP1	ADFLTR0IP0
IPC31	87Eh	—	SPI2GIP0	SPI2GIP1	SPI2GIP0	—	SPI1GIP2	SPI1GIP1	SPI1GIP0	—	CLC2PIP2	CLC2PIP1	CLC2PIP0	—	CLC1PIP2	CLC1PIP1	CLC1PIP0
IPC32	880h	—	—	—	—	—	—	—	—	—	—	—	—	—	SPI3GIP2	SPI3GIP1	SPI3GIP0
IPC42	894h	—	PEVTCIP2	PEVTCIP1	PEVTCIP0	—	PEVTBIP2	PEVTBIP1	PEVTBIP0	—	PEVTAIP2	PEVTAIP1	PEVTAIP0	—	—	—	—
IPC43	896h	—	CLC3PIP2	CLC3PIP1	CLC3PIP0	—	PEVTFIP2	PEVTFIP1	PEVTFIP0	—	PEVTEIP2	PEVTEIP1	PEVTEIP0	—	PEVTDIP2	PEVTDIP1	PEVTDIP0
IPC44	898h	—	CLC3NIP2	CLC3NIP1	CLC3NIP0	—	CLC2NIP2	CLC2NIP1	CLC2NIP0	—	CLC1NIP2	CLC1NIP1	CLC1NIP0	—	CLC4PIP2	CLC4PIP1	CLC4PIP0
IPC45	89Ah	—	—	—	—	—	—	—	—	—	—	—	—	—	CLC4NIP2	CLC4NIP1	CLC4NIP0
IPC47	89Eh	—	U3EVTIP2	U3EVTIP1	U3EVTIP0	—	U2EVTIP2	U2EVTIP1	U2EVTIP0	—	U1EVTIP2	U1EVTIP1	U1EVTIP0	—	—	—	—

Legend: — = Unimplemented.

© 2018-2019 Microchip Technology Inc.

7.3 Interrupt Resources

Many useful resources are provided on the main product page of the Microchip website for the devices listed in this data sheet. This product page contains the latest updates and additional information.

7.3.1 KEY RESOURCES

- **"Interrupts"** (www.microchip.com/DS70000600) in the *"dsPIC33/PIC24 Family Reference Manual"*
- Code Samples
- Application Notes
- Software Libraries
- Webinars
- All Related *"dsPIC33/PIC24 Family Reference Manual"* Sections
- Development Tools

7.4 Interrupt Control and Status Registers

The dsPIC33CK64MP105 family devices implement the following registers for the interrupt controller:

- INTCON1
- INTCON2
- INTCON3
- INTCON4
- INTTREG

7.4.1 INTCON1 THROUGH INTCON4

Global interrupt control functions are controlled from INTCON1, INTCON2, INTCON3 and INTCON4.

INTCON1 contains the Interrupt Nesting Disable bit (NSTDIS), as well as the control and status flags for the processor trap sources.

The INTCON2 register controls external interrupt request signal behavior, contains the Global Interrupt Enable bit (GIE) and the Alternate Interrupt Vector Table Enable bit (AIVTEN).

INTCON3 contains the status flags for the Auxiliary PLL and DO stack overflow status trap sources.

The INTCON4 register contains the Software Generated Hard Trap Status bit (SGHT).

7.4.2 IFSx

The IFSx registers maintain all of the interrupt request flags. Each source of interrupt has a status bit, which is set by the respective peripherals or external signal and is cleared via software.

7.4.3 IECx

The IECx registers maintain all of the interrupt enable bits. These control bits are used to individually enable interrupts from the peripherals or external signals.

7.4.4 IPCx

The IPCx registers are used to set the Interrupt Priority Level (IPL) for each source of interrupt. Each user interrupt source can be assigned to one of seven priority levels.

7.4.5 INTTREG

The INTTREG register contains the associated interrupt vector number and the new CPU Interrupt Priority Level, which are latched into the Vector Number (VECNUM[7:0]) and Interrupt Level bits (ILR[3:0]) fields in the INTTREG register. The new Interrupt Priority Level is the priority of the pending interrupt.

The interrupt sources are assigned to the IFSx, IECx and IPCx registers in the same sequence as they are listed in Table 7-2. For example, INT0 (External Interrupt 0) is shown as having Vector Number 8 and a natural order priority of 0. Thus, the INT0IF bit is found in IFS0[0], the INT0IE bit in IEC0[0] and the INT0IP[2:0] bits in the first position of IPC0 (IPC0[2:0]).

7.4.6 STATUS/CONTROL REGISTERS

Although these registers are not specifically part of the interrupt control hardware, two of the CPU Control registers contain bits that control interrupt functionality. For more information on these registers, refer to **"Enhanced CPU"** (www.microchip.com/DS70005158) in the *"dsPIC33/PIC24 Family Reference Manual"*.

- The CPU STATUS Register, SR, contains the IPL[2:0] bits (SR[7:5]). These bits indicate the current CPU Interrupt Priority Level. The user software can change the current CPU Interrupt Priority Level by writing to the IPLx bits.
- The CORCON register contains the IPL3 bit, which together with IPL[2:0], also indicates the current CPU priority level. IPL3 is a read-only bit so that trap events cannot be masked by the user software.

All Interrupt registers are described in Register 7-3 through Register 7-7 in the following pages.

REGISTER 7-1: SR: CPU STATUS REGISTER(1)

R/W-0	R/W-0	R/W-0	R/W-0	R/C-0	R/C-0	R-0	R/W-0
OA	OB	SA	SB	OAB	SAB	DA	DC
bit 15							bit 8

R/W-0(3)	R/W-0(3)	R/W-0(3)	R-0	R/W-0	R/W-0	R/W-0	R/W-0
IPL2(2)	IPL1(2)	IPL0(2)	RA	N	OV	Z	C
bit 7							bit 0

Legend:	C = Clearable bit		
R = Readable bit	W = Writable bit	U = Unimplemented bit, read as ‘0’	
-n = Value at POR	‘1’= Bit is set	‘0’ = Bit is cleared	x = Bit is unknown

bit 7-5 **IPL[2:0]:** CPU Interrupt Priority Level Status bits(2,3)
`111` = CPU Interrupt Priority Level is 7 (15); user interrupts are disabled
`110` = CPU Interrupt Priority Level is 6 (14)
`101` = CPU Interrupt Priority Level is 5 (13)
`100` = CPU Interrupt Priority Level is 4 (12)
`011` = CPU Interrupt Priority Level is 3 (11)
`010` = CPU Interrupt Priority Level is 2 (10)
`001` = CPU Interrupt Priority Level is 1 (9)
`000` = CPU Interrupt Priority Level is 0 (8)

Note 1: For complete register details, see Register 3-1.
2: The IPL[2:0] bits are concatenated with the IPL[3] bit (CORCON[3]) to form the CPU Interrupt Priority Level. The value in parentheses indicates the IPL, if IPL[3] = `1`. User interrupts are disabled when IPL[3] = `1`.
3: The IPL[2:0] Status bits are read-only when the NSTDIS bit (INTCON1[15]) = `1`.

© 2018-2019 Microchip Technology Inc.

REGISTER 7-2: CORCON: CORE CONTROL REGISTER(1)

R/W-0	U-0	R/W-0	R/W-0	R/W-0	R-0	R-0	R-0
VAR	—	US1	US0	EDT	DL2	DL1	DL0
bit 15							bit 8

R/W-0	R/W-0	R/W-1	R/W-0	R/C-0	R-0	R/W-0	R/W-0
SATA	SATB	SATDW	ACCSAT	IPL3(2)	SFA	RND	IF
bit 7							bit 0

Legend:	C = Clearable bit		
R = Readable bit	W = Writable bit	U = Unimplemented bit, read as ‘0’	
-n = Value at POR	‘1’= Bit is set	‘0’ = Bit is cleared	x = Bit is unknown

bit 15 **VAR:** Variable Exception Processing Latency Control bit
1 = Variable exception processing is enabled
0 = Fixed exception processing is enabled

bit 3 **IPL3:** CPU Interrupt Priority Level Status bit 3(2)
1 = CPU Interrupt Priority Level is greater than 7
0 = CPU Interrupt Priority Level is 7 or less

Note 1: For complete register details, see Register 3-2.
2: The IPL3 bit is concatenated with the IPL[2:0] bits (SR[7:5]) to form the CPU Interrupt Priority Level.

REGISTER 7-3: INTCON1: INTERRUPT CONTROL REGISTER 1

R/W-0	R/W-0	R/W-0	R/W-0	R/W-0	R/W-0	R/W-0	R/W-0
NSTDIS	OVAERR	OVBERR	COVAERR	COVBERR	OVATE	OVBTE	COVTE
bit 15							bit 8

R/W-0	R/W-0	R/W-0	R/W-0	R/W-0	R/W-0	R/W-0	U-0
SFTACERR	DIV0ERR	DMACERR	MATHERR	ADDRERR	STKERR	OSCFAIL	—
bit 7							bit 0

Legend:			
R = Readable bit	W = Writable bit	U = Unimplemented bit, read as ‘0’	
-n = Value at POR	‘1’ = Bit is set	‘0’ = Bit is cleared	x = Bit is unknown

bit 15 **NSTDIS:** Interrupt Nesting Disable bit
1 = Interrupt nesting is disabled
0 = Interrupt nesting is enabled

bit 14 **OVAERR:** Accumulator A Overflow Trap Flag bit
1 = Trap was caused by an overflow of Accumulator A
0 = Trap was not caused by an overflow of Accumulator A

bit 13 **OVBERR:** Accumulator B Overflow Trap Flag bit
1 = Trap was caused by an overflow of Accumulator B
0 = Trap was not caused by an overflow of Accumulator B

bit 12 **COVAERR:** Accumulator A Catastrophic Overflow Trap Flag bit
1 = Trap was caused by a catastrophic overflow of Accumulator A
0 = Trap was not caused by a catastrophic overflow of Accumulator A

bit 11 **COVBERR:** Accumulator B Catastrophic Overflow Trap Flag bit
1 = Trap was caused by a catastrophic overflow of Accumulator B
0 = Trap was not caused by a catastrophic overflow of Accumulator B

bit 10 **OVATE:** Accumulator A Overflow Trap Enable bit
1 = Trap overflow of Accumulator A
0 = Trap is disabled

bit 9 **OVBTE:** Accumulator B Overflow Trap Enable bit
1 = Trap overflow of Accumulator B
0 = Trap is disabled

bit 8 **COVTE:** Catastrophic Overflow Trap Enable bit
1 = Trap catastrophic overflow of Accumulator A or B is enabled
0 = Trap is disabled

bit 7 **SFTACERR:** Shift Accumulator Error Status bit
1 = Math error trap was caused by an invalid accumulator shift
0 = Math error trap was not caused by an invalid accumulator shift

bit 6 **DIV0ERR:** Divide-by-Zero Error Status bit
1 = Math error trap was caused by a divide-by-zero
0 = Math error trap was not caused by a divide-by-zero

bit 5 **DMACERR:** DMA Controller Trap Status bit
1 = DMAC error trap has occurred
0 = DMAC error trap has not occurred

bit 4 **MATHERR:** Math Error Status bit
1 = Math error trap has occurred
0 = Math error trap has not occurred

© 2018-2019 Microchip Technology Inc.

REGISTER 7-3: INTCON1: INTERRUPT CONTROL REGISTER 1 (CONTINUED)

bit 3 **ADDRERR:** Address Error Trap Status bit
1 = Address error trap has occurred
0 = Address error trap has not occurred

bit 2 **STKERR:** Stack Error Trap Status bit
1 = Stack error trap has occurred
0 = Stack error trap has not occurred

bit 1 **OSCFAIL:** Oscillator Failure Trap Status bit
1 = Oscillator failure trap has occurred
0 = Oscillator failure trap has not occurred

bit 0 **Unimplemented:** Read as '0'

REGISTER 7-4: INTCON2: INTERRUPT CONTROL REGISTER 2

R/W-1	R/W-0	R/W-0	U-0	U-0	U-0	U-0	R/W-0
GIE	DISI	SWTRAP	—	—	—	—	AIVTEN
bit 15							bit 8

U-0	U-0	U-0	U-0	R/W-0	R/W-0	R/W-0	R/W-0
—	—	—	—	INT3EP	INT2EP	INT1EP	INT0EP
bit 7							bit 0

Legend:			
R = Readable bit	W = Writable bit	U = Unimplemented bit, read as ‘0’	
-n = Value at POR	‘1’ = Bit is set	‘0’ = Bit is cleared	x = Bit is unknown

bit 15 **GIE:** Global Interrupt Enable bit
1 = Interrupts and associated IE bits are enabled
0 = Interrupts are disabled, but traps are still enabled

bit 14 **DISI:** DISI Instruction Status bit
1 = DISI instruction is active
0 = DISI instruction is not active

bit 13 **SWTRAP:** Software Trap Status bit
1 = Software trap is enabled
0 = Software trap is disabled

bit 12-9 **Unimplemented:** Read as ‘0’

bit 8 **AIVTEN:** Alternate Interrupt Vector Table Enable bit
1 = Uses Alternate Interrupt Vector Table
0 = Uses standard Interrupt Vector Table

bit 7-4 **Unimplemented:** Read as ‘0’

bit 3 **INT3EP:** External Interrupt 3 Edge Detect Polarity Select bit
1 = Interrupt on negative edge
0 = Interrupt on positive edge

bit 2 **INT2EP:** External Interrupt 2 Edge Detect Polarity Select bit
1 = Interrupt on negative edge
0 = Interrupt on positive edge

bit 1 **INT1EP:** External Interrupt 1 Edge Detect Polarity Select bit
1 = Interrupt on negative edge
0 = Interrupt on positive edge

bit 0 **INT0EP:** External Interrupt 0 Edge Detect Polarity Select bit
1 = Interrupt on negative edge
0 = Interrupt on positive edge

© 2018-2019 Microchip Technology Inc.

REGISTER 7-5: INTCON3: INTERRUPT CONTROL REGISTER 3

U-0	U-0	U-0	U-0	U-0	U-0	U-0	R/W-0
—	—	—	—	—	—	—	NAE
bit 15							bit 8

U-0	U-0	U-0	R/W-0	U-0	U-0	U-0	R/W-0
—	—	—	DOOVR	—	—	—	APLL
bit 7							bit 0

Legend:			
R = Readable bit	W = Writable bit	U = Unimplemented bit, read as ‘0’	
-n = Value at POR	‘1’ = Bit is set	‘0’ = Bit is cleared	x = Bit is unknown

bit 15-9 **Unimplemented:** Read as ‘0’

bit 8 **NAE:** NVM Address Error Soft Trap Status bit
1 = NVM address error soft trap has occurred
0 = NVM address error soft trap has not occurred

bit 7-5 **Unimplemented:** Read as ‘0’

bit 4 **DOOVR:** DO Stack Overflow Soft Trap Status bit
1 = DO stack overflow soft trap has occurred
0 = DO stack overflow soft trap has not occurred

bit 3-1 **Unimplemented:** Read as ‘0’

bit 0 **APLL:** Auxiliary PLL Loss of Lock Soft Trap Status bit
1 = APLL lock soft trap has occurred
0 = APLL lock soft trap has not occurred

REGISTER 7-6: INTCON4: INTERRUPT CONTROL REGISTER 4

U-0	U-0	U-0	U-0	U-0	U-0	U-0	U-0
—	—	—	—	—	—	—	—
bit 15							bit 8

U-0	U-0	U-0	U-0	U-0	U-0	R/W-0	R/W-0
—	—	—	—	—	—	ECCDBE	SGHT
bit 7							bit 0

Legend:			
R = Readable bit	W = Writable bit	U = Unimplemented bit, read as ‘0’	
-n = Value at POR	‘1’ = Bit is set	‘0’ = Bit is cleared	x = Bit is unknown

bit 15-2 **Unimplemented:** Read as ‘0’

bit 1 **ECCDBE:** ECC Double-Bit Error Trap bit
1 = ECC double-bit error trap has occurred
0 = ECC double-bit error trap has not occurred

bit 0 **SGHT:** Software Generated Hard Trap Status bit
1 = Software generated hard trap has occurred
0 = Software generated hard trap has not occurred

© 2018-2019 Microchip Technology Inc.

REGISTER 7-7: INTTREG: INTERRUPT CONTROL AND STATUS REGISTER

U-0	U-0	R-0	U-0	R-0	R-0	R-0	R-0
—	—	VHOLD	—	ILR3	ILR2	ILR1	ILR0
bit 15							bit 8

R-0	R-0	R-0	R-0	R-0	R-0	R-0	R-0
VECNUM7	VECNUM6	VECNUM5	VECNUM4	VECNUM3	VECNUM2	VECNUM1	VECNUM0
bit 7							bit 0

Legend:			
R = Readable bit	W = Writable bit	U = Unimplemented bit, read as ‘0’	
-n = Value at POR	‘1’ = Bit is set	‘0’ = Bit is cleared	x = Bit is unknown

bit 15-14 **Unimplemented:** Read as ‘0’

bit 13 **VHOLD:** Vector Number Capture Enable bit

1 = VECNUM[7:0] bits read current value of vector number encoding tree (i.e., highest priority pending interrupt)

0 = Vector number latched into VECNUM[7:0] at Interrupt Acknowledge and retained until next IACK

bit 12 **Unimplemented:** Read as ‘0’

bit 11-8 **ILR[3:0]:** New CPU Interrupt Priority Level bits

1111 = CPU Interrupt Priority Level is 15

...

0001 = CPU Interrupt Priority Level is 1

0000 = CPU Interrupt Priority Level is 0

bit 7-0 **VECNUM[7:0]:** Vector Number of Pending Interrupt bits

11111111 = 255, Reserved; do not use

...

00001001 = 9, T1 – Timer 1 interrupt

00001000 = 8, INT0 – External Interrupt 0

00000111 = 7, Reserved; do not use

00000110 = 6, Generic soft error trap

00000101 = 5, Reserved; do not use

00000100 = 4, Math error trap

00000011 = 3, Stack error trap

00000010 = 2, Generic hard trap

00000001 = 1, Address error trap

00000000 = 0, Oscillator fail trap

NOTES:

© 2018-2019 Microchip Technology Inc.

8.0 I/O PORTS

Note 1: This data sheet summarizes the features of the dsPIC33CK64MP105 family of devices. It is not intended to be a comprehensive reference source. To complement the information in this data sheet, refer to **"I/O Ports with Edge Detect"** (www.microchip.com/DS70005322) in the *"dsPIC33/PIC24 Family Reference Manual"*.

2: Some registers and associated bits described in this section may not be available on all devices.

Many of the device pins are shared among the peripherals and the Parallel I/O ports. All I/O input ports feature Schmitt Trigger inputs for improved noise immunity. The PORT registers are located in the SFR.

Some of the key features of the I/O ports are:

- Individual Output Pin Open-Drain Enable/Disable
- Individual Input Pin Weak Pull-up and Pull-Down
- Monitor Selective Inputs and Generate Interrupt when Change in Pin State is Detected
- Operation during Sleep and Idle modes

8.1 Parallel I/O (PIO) Ports

All port pins have 12 registers directly associated with their operation as digital I/Os. The Data Direction register (TRISx) determines whether the pin is an input or an output. If the data direction bit is a '1', then the pin is an input.

All port pins are defined as inputs after a Reset. Reads from the latch (LATx), read the latch. Writes to the latch, write the latch. Reads from the port (PORTx), read the port pins, while writes to the port pins, write the latch. Any bit and its associated data and control registers that are not valid for a particular device are disabled. This means the corresponding LATx and TRISx registers, and the port pin are read as zeros.

When a pin is shared with another peripheral or function that is defined as an input only, it is nevertheless regarded as a dedicated port because there is no other competing source of outputs. Table 8-1 shows the pin availability. Table 8-2 shows the 5V input tolerant pins across this device.

TABLE 8-1: PIN AND ANSELx AVAILABILITY

Device	Rx15	Rx14	Rx13	Rx12	Rx11	Rx10	Rx9	Rx8	Rx7	Rx6	Rx5	Rx4	Rx3	Rx2	Rx1	Rx0
PORTA																
dsPIC33CKXXMP105	—	—	—	—	—	—	—	—	—	—	—	X	X	X	X	X
dsPIC33CKXXMP103	—	—	—	—	—	—	—	—	—	—	—	X	X	X	X	X
dsPIC33CKXXMP102	—	—	—	—	—	—	—	—	—	—	—	X	X	X	X	X
ANSELA	—	—	—	—	—	—	—	—	—	—	—	X	X	X	X	X
PORTB																
dsPIC33CKXXMP105	X	X	X	X	X	X	X	X	X	X	X	X	X	X	X	X
dsPIC33CKXXMP103	X	X	X	X	X	X	X	X	X	X	X	X	X	X	X	X
dsPIC33CKXXMP102	X	X	X	X	X	X	X	X	X	X	X	X	X	X	X	X
ANSELB	—	—	—	—	—	—	X	X	X	—	—	X	X	X	X	X
PORTC																
dsPIC33CKXXMP105	—	—	X	X	X	X	X	X	X	X	X	X	X	X	X	X
dsPIC33CKXXMP103	—	—	—	—	—	—	—	—	—	—	X	X	X	X	X	X
dsPIC33CKXXMP102	—	—	—	—	—	—	—	—	—	—	—	—	—	—	—	—
ANSELC	—	—	—	—	—	—	—	—	X	X	—	—	X	X	X	X
PORTD																
dsPIC33CKXXMP105	—	—	X	—	—	X	—	X	—	—	—	—	—	—	X	—
dsPIC33CKXXMP103	—	—	—	—	—	—	—	—	—	—	—	—	—	—	—	—
dsPIC33CKXXMP102	—	—	—	—	—	—	—	—	—	—	—	—	—	—	—	—
ANSELD	—	—	X	—	—	X	—	—	—	—	—	—	—	—	—	—

TABLE 8-2: 5V INPUT TOLERANT PORTS

PORTA	—	—	—	—	—	—	—	—	—	—	—	RA4	RA3	RA2	RA1	RA0
PORTB	RB15	RB14	RB13	RB12	RB11	RB10	RB9	RB8	RB7	RB6	RB5	RB4	RB3	RB2	RB1	RB0
PORTC	—	—	RC13	RC12	RC11	RC10	RC9	RC8	RC7	RC6	RC5	RC4	RC3	RC2	RC1	RC0
PORTD	—	—	RD13	—	—	RD10	—	RD8	—	—	—	—	—	—	RD1	—

Legend: Shaded pins are up to 5.5 VDC input tolerant.

© 2018-2019 Microchip Technology Inc.

FIGURE 8-1: BLOCK DIAGRAM OF A TYPICAL SHARED PORT STRUCTURE

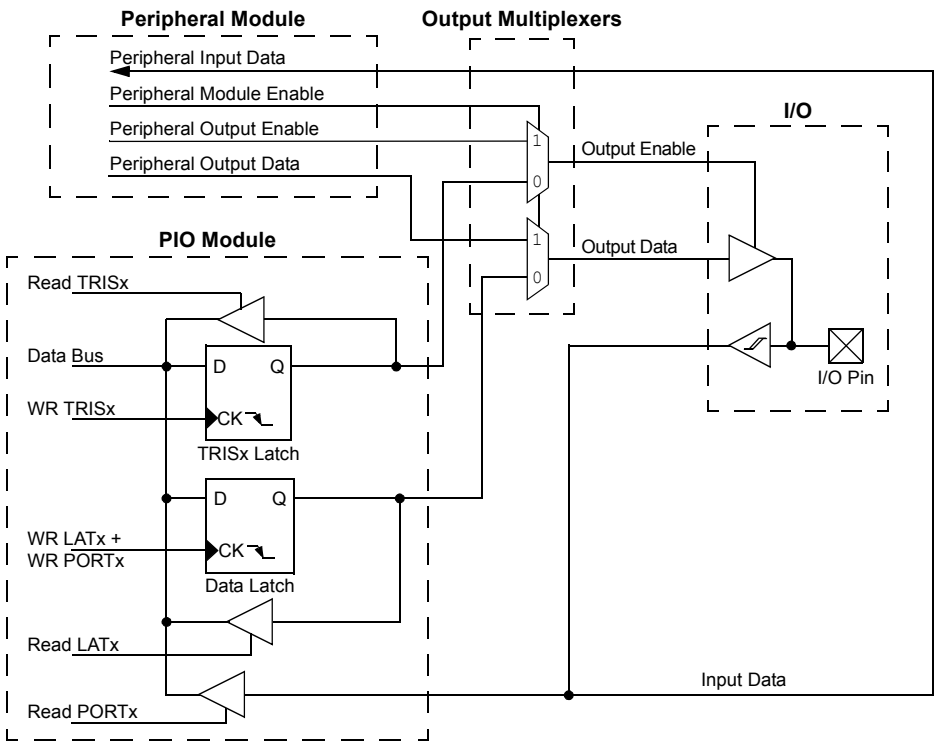

8.1.1 OPEN-DRAIN CONFIGURATION

In addition to the PORTx, LATx and TRISx registers for data control, port pins can also be individually configured for either digital or open-drain output. This is controlled by the Open-Drain Enable for PORTx register, ODCx, associated with each port. Setting any of the bits configures the corresponding pin to act as an open-drain output.

The open-drain feature allows the generation of outputs, other than V_{DD}, by using external pull-up resistors. The maximum open-drain voltage allowed on any pin is the same as the maximum V_{IH} specification for that particular pin.

8.2 Configuring Analog and Digital Port Pins

The ANSELx registers control the operation of the analog port pins. The port pins that are to function as analog inputs or outputs must have their corresponding ANSELx and TRISx bits set. In order to use port pins for I/O functionality with digital modules, such as timers, UARTs, etc., the corresponding ANSELx bit must be cleared.

The ANSELx registers have a default value of 0xFFFF; therefore, all pins that share analog functions are analog (not digital) by default.

Pins with analog functions affected by the ANSELx registers are listed with a buffer type of analog in the Pinout I/O Descriptions (see Table 1-1).

If the TRISx bit is cleared (output) while the ANSELx bit is set, the digital output level (V_{OH} or V_{OL}) is converted by an analog peripheral, such as the ADC module or comparator module.

When the PORTx register is read, all pins configured as analog input channels are read as cleared (a low level).

Pins configured as digital inputs do not convert an analog input. Analog levels on any pin, defined as a digital input (including the ANx pins), can cause the input buffer to consume current that exceeds the device specifications.

8.2.1 I/O PORT WRITE/READ TIMING

One instruction cycle is required between a port direction change or port write operation and a read operation of the same port. Typically, this instruction would be a `NOP`.

8.3 Control Registers

The following registers are in the PORT module:

- Register 8-1: ANSELx (one per port)
- Register 8-2: TRISx (one per port)
- Register 8-3: PORTx (one per port)
- Register 8-4: LATx (one per port)
- Register 8-5: ODCx (one per port)
- Register 8-6: CNPUx (one per port)
- Register 8-7: CNPDx (one per port)
- Register 8-8: CNCONx (one per port – optional)
- Register 8-9: CNEN0x (one per port)
- Register 8-10: CNSTATx (one per port – optional)
- Register 8-11: CNEN1x (one per port)
- Register 8-12: CNFx (one per port)

REGISTER 8-1: ANSELx: ANALOG SELECT FOR PORTx REGISTER

R/W-1	R/W-1	R/W-1	R/W-1	R/W-1	R/W-1	R/W-1	R/W-1
ANSELx[15:8]							
bit 15							bit 8

R/W-1	R/W-1	R/W-1	R/W-1	R/W-1	R/W-1	R/W-1	R/W-1
ANSELx[7:0]							
bit 7							bit 0

Legend:			
R = Readable bit	W = Writable bit	U = Unimplemented bit, read as ‘0’	
-n = Value at POR	‘1’ = Bit is set	‘0’ = Bit is cleared	x = Bit is unknown

bit 15-0 **ANSELx[15:0]:** Analog Select for PORTx bits

`1` = Analog input is enabled and digital input is disabled on the PORTx[n] pin
`0` = Analog input is disabled and digital input is enabled on the PORTx[n] pin

© 2018-2019 Microchip Technology Inc.

REGISTER 8-2: TRISx: OUTPUT ENABLE FOR PORTx REGISTER

R/W-1	R/W-1	R/W-1	R/W-1	R/W-1	R/W-1	R/W-1	R/W-1
TRISx[15:8]							
bit 15							bit 8

R/W-1	R/W-1	R/W-1	R/W-1	R/W-1	R/W-1	R/W-1	R/W-1
TRISx[7:0]							
bit 7							bit 0

Legend:			
R = Readable bit	W = Writable bit	U = Unimplemented bit, read as ‘0’	
-n = Value at POR	‘1’ = Bit is set	‘0’ = Bit is cleared	x = Bit is unknown

bit 15-0 **TRISx[15:0]:** Output Enable for PORTx bits
1 = LATx[n] is not driven on the PORTx[n] pin
0 = LATx[n] is driven on the PORTx[n] pin

REGISTER 8-3: PORTx: INPUT DATA FOR PORTx REGISTER

R/W-1	R/W-1	R/W-1	R/W-1	R/W-1	R/W-1	R/W-1	R/W-1
PORTx[15:8]							
bit 15							bit 8

R/W-1	R/W-1	R/W-1	R/W-1	R/W-1	R/W-1	R/W-1	R/W-1
PORTx[7:0]							
bit 7							bit 0

Legend:			
R = Readable bit	W = Writable bit	U = Unimplemented bit, read as ‘0’	
-n = Value at POR	‘1’ = Bit is set	‘0’ = Bit is cleared	x = Bit is unknown

bit 15-0 **PORTx[15:0]:** PORTx Data Input Value bits

REGISTER 8-4: LATx: OUTPUT DATA FOR PORTx REGISTER

R/W-x	R/W-x	R/W-x	R/W-x	R/W-x	R/W-x	R/W-x	R/W-x
LATx[15:8]							
bit 15							bit 8

R/W-x	R/W-x	R/W-x	R/W-x	R/W-x	R/W-x	R/W-x	R/W-x
LATx[7:0]							
bit 7							bit 0

Legend:			
R = Readable bit	W = Writable bit	U = Unimplemented bit, read as ‘0’	
-n = Value at POR	‘1’ = Bit is set	‘0’ = Bit is cleared	x = Bit is unknown

bit 15-0 **LATx[15:0]:** PORTx Data Output Value bits

REGISTER 8-5: ODCx: OPEN-DRAIN ENABLE FOR PORTx REGISTER

R/W-0	R/W-0	R/W-0	R/W-0	R/W-0	R/W-0	R/W-0	R/W-0
ODCx[15:8]							
bit 15							bit 8

R/W-0	R/W-0	R/W-0	R/W-0	R/W-0	R/W-0	R/W-0	R/W-0
ODCx[7:0]							
bit 7							bit 0

Legend:			
R = Readable bit	W = Writable bit	U = Unimplemented bit, read as ‘0’	
-n = Value at POR	‘1’ = Bit is set	‘0’ = Bit is cleared	x = Bit is unknown

bit 15-0 **ODCx[15:0]:** PORTx Open-Drain Enable bits
1 = Open-drain is enabled on the PORTx pin
0 = Open-drain is disabled on the PORTx pin

© 2018-2019 Microchip Technology Inc.

REGISTER 8-6: CNPUx: CHANGE NOTIFICATION PULL-UP ENABLE FOR PORTx REGISTER

R/W-0	R/W-0	R/W-0	R/W-0	R/W-0	R/W-0	R/W-0	R/W-0
CNPUx[15:8]							
bit 15							bit 8

R/W-0	R/W-0	R/W-0	R/W-0	R/W-0	R/W-0	R/W-0	R/W-0
CNPUx[7:0]							
bit 7							bit 0

Legend:			
R = Readable bit	W = Writable bit	U = Unimplemented bit, read as ‘0’	
-n = Value at POR	‘1’ = Bit is set	‘0’ = Bit is cleared	x = Bit is unknown

bit 15-0 **CNPUx[15:0]:** Change Notification Pull-up Enable for PORTx bits
1 = The pull-up for PORTx[n] is enabled – takes precedence over the pull-down selection
0 = The pull-up for PORTx[n] is disabled

REGISTER 8-7: CNPDx: CHANGE NOTIFICATION PULL-DOWN ENABLE FOR PORTx REGISTER

R/W-0	R/W-0	R/W-0	R/W-0	R/W-0	R/W-0	R/W-0	R/W-0
CNPDx[15:8]							
bit 15							bit 8

R/W-0	R/W-0	R/W-0	R/W-0	R/W-0	R/W-0	R/W-0	R/W-0
CNPDx[7:0]							
bit 7							bit 0

Legend:			
R = Readable bit	W = Writable bit	U = Unimplemented bit, read as ‘0’	
-n = Value at POR	‘1’ = Bit is set	‘0’ = Bit is cleared	x = Bit is unknown

bit 15-0 **CNPDx[15:0]:** Change Notification Pull-Down Enable for PORTx bits
1 = The pull-down for PORTx[n] is enabled (if the pull-up for PORTx[n] is not enabled)
0 = The pull-down for PORTx[n] is disabled

REGISTER 8-8: CNCONx: CHANGE NOTIFICATION CONTROL FOR PORTx REGISTER

R/W-0	U-0	U-0	U-0	R/W-0	U-0	U-0	U-0
ON	—	—	—	CNSTYLE	—	—	—
bit 15							bit 8

U-0	U-0	U-0	U-0	U-0	U-0	U-0	U-0
—	—	—	—	—	—	—	—
bit 7							bit 0

Legend:			
R = Readable bit	W = Writable bit	U = Unimplemented bit, read as ‘0’	
-n = Value at POR	‘1’ = Bit is set	‘0’ = Bit is cleared	x = Bit is unknown

bit 15 **ON:** Change Notification (CN) Control for PORTx On bit
1 = CN is enabled
0 = CN is disabled

bit 14-12 **Unimplemented:** Read as ‘0’

bit 11 **CNSTYLE:** Change Notification Style Selection bit
1 = Edge style (detects edge transitions, CNFx[15:0] bits are used for a Change Notification event)
0 = Mismatch style (detects change from last port read, CNSTATx[15:0] bits are used for a Change Notification event)

bit 10-0 **Unimplemented:** Read as ‘0’

REGISTER 8-9: CNEN0x: INTERRUPT CHANGE NOTIFICATION ENABLE FOR PORTx REGISTER

R/W-0	R/W-0	R/W-0	R/W-0	R/W-0	R/W-0	R/W-0	R/W-0
CNEN0x[15:8]							
bit 15							bit 8

R/W-0	R/W-0	R/W-0	R/W-0	R/W-0	R/W-0	R/W-0	R/W-0
CNEN0x[7:0]							
bit 7							bit 0

Legend:			
R = Readable bit	W = Writable bit	U = Unimplemented bit, read as ‘0’	
-n = Value at POR	‘1’ = Bit is set	‘0’ = Bit is cleared	x = Bit is unknown

bit 15-0 **CNEN0x[15:0]:** Interrupt Change Notification Enable for PORTx bits
1 = Interrupt-on-change (from the last read value) is enabled for PORTx[n]
0 = Interrupt-on-change is disabled for PORTx[n]

© 2018-2019 Microchip Technology Inc.

REGISTER 8-10: CNSTATx: INTERRUPT CHANGE NOTIFICATION STATUS FOR PORTx REGISTER

R-0	R-0	R-0	R-0	R-0	R-0	R-0	R-0
CNSTATx[15:8]							
bit 15							bit 8

R-0	R-0	R-0	R-0	R-0	R-0	R-0	R-0
CNSTATx[7:0]							
bit 7							bit 0

Legend:			
R = Readable bit	W = Writable bit	U = Unimplemented bit, read as ‘0’	
-n = Value at POR	‘1’ = Bit is set	‘0’ = Bit is cleared	x = Bit is unknown

bit 15-0 **CNSTATx[15:0]:** Interrupt Change Notification Status for PORTx bits
When CNSTYLE (CNCONx[11]) = 0:
1 = Change occurred on PORTx[n] since last read of PORTx[n]
0 = Change did not occur on PORTx[n] since last read of PORTx[n]

REGISTER 8-11: CNEN1x: INTERRUPT CHANGE NOTIFICATION EDGE SELECT FOR PORTx REGISTER

R/W-0	R/W-0	R/W-0	R/W-0	R/W-0	R/W-0	R/W-0	R/W-0
CNEN1x[15:8]							
bit 15							bit 8

R/W-0	R/W-0	R/W-0	R/W-0	R/W-0	R/W-0	R/W-0	R/W-0
CNEN1x[7:0]							
bit 7							bit 0

Legend:			
R = Readable bit	W = Writable bit	U = Unimplemented bit, read as ‘0’	
-n = Value at POR	‘1’ = Bit is set	‘0’ = Bit is cleared	x = Bit is unknown

bit 15-0 **CNEN1x[15:0]:** Interrupt Change Notification Edge Select for PORTx bits

REGISTER 8-12: CNFx: INTERRUPT CHANGE NOTIFICATION FLAG FOR PORTx REGISTER

R/W-0	R/W-0	R/W-0	R/W-0	R/W-0	R/W-0	R/W-0	R/W-0
CNFx[15:8]							
bit 15							bit 8

R/W-0	R/W-0	R/W-0	R/W-0	R/W-0	R/W-0	R/W-0	R/W-0
CNFx[7:0]							
bit 7							bit 0

Legend:			
R = Readable bit	W = Writable bit	U = Unimplemented bit, read as ‘0’	
-n = Value at POR	‘1’ = Bit is set	‘0’ = Bit is cleared	x = Bit is unknown

bit 15- **CNFx[15:0]:** Interrupt Change Notification Flag for PORTx bits
When CNSTYLE (CNCONx[11]) = 1:
1 = An enabled edge event occurred on the PORTx[n] pin
0 = An enabled edge event did not occur on the PORTx[n] pin

© 2018-2019 Microchip Technology Inc.

8.4 Input Change Notification (ICN)

The Input Change Notification function of the I/O ports allows the dsPIC33CK64MP105 family devices to generate interrupt requests to the processor in response to a Change-of-State (COS) on selected input pins. This feature can detect input Change-of-States, even in Sleep mode, when the clocks are disabled. Every I/O port pin can be selected (enabled) for generating an interrupt request on a Change-of-State. Five control registers are associated with the Change Notification (CN) functionality of each I/O port. To enable the Change Notification feature for the port, the ON bit (CNCONx[15]) must be set.

The CNEN0x and CNEN1x registers contain the CN interrupt enable control bits for each of the input pins. The setting of these bits enables a CN interrupt for the corresponding pins. Also, these bits, in combination with the CNSTYLE bit (CNCONx[11]), define a type of transition when the interrupt is generated. Possible CN event options are listed in Table 8-3.

TABLE 8-3: CHANGE NOTIFICATION EVENT OPTIONS

CNSTYLE Bit (CNCONx[11])	CNEN1x Bit	CNEN0x Bit	Change Notification Event Description
0	Does not matter	0	Disabled
0	Does not matter	1	Detects a mismatch between the last read state and the current state of the pin
1	0	0	Disabled
1	0	1	Detects a positive transition only (from '0' to '1')
1	1	0	Detects a negative transition only (from '1' to '0')
1	1	1	Detects both positive and negative transitions

The CNSTATx register indicates whether a change occurred on the corresponding pin since the last read of the PORTx bit. In addition to the CNSTATx register, the CNFx register is implemented for each port. This register contains flags for Change Notification events. These flags are set if the valid transition edge, selected in the CNEN0x and CNEN1x registers, is detected. CNFx stores the occurrence of the event. CNFx bits must be cleared in software to get the next Change Notification interrupt. The CN interrupt is generated only for the I/Os configured as inputs (corresponding TRISx bits must be set).

Note: Pull-ups and pull-downs on Input Change Notification pins should always be disabled when the port pin is configured as a digital output.

8.5 Peripheral Pin Select (PPS)

A major challenge in general purpose devices is providing the largest possible set of peripheral features, while minimizing the conflict of features on I/O pins. The challenge is even greater on low pin count devices. In an application where more than one peripheral needs to be assigned to a single pin, inconvenient work arounds in application code, or a complete redesign, may be the only option.

Peripheral Pin Select configuration provides an alternative to these choices by enabling peripheral set selection and placement on a wide range of I/O pins. By increasing the pinout options available on a particular device, users can better tailor the device to their entire application, rather than trimming the application to fit the device.

The Peripheral Pin Select configuration feature operates over a fixed subset of digital I/O pins. Users may independently map the input and/or output of most digital peripherals to any one of these I/O pins. Hardware safeguards are included that prevent accidental or spurious changes to the peripheral mapping once it has been established.

8.5.1 AVAILABLE PINS

The number of available pins is dependent on the particular device and its pin count. Pins that support the Peripheral Pin Select feature include the label, "RPn", in their full pin designation, where "n" is the remappable pin number. "RP" is used to designate pins that support both remappable input and output functions.

8.5.2 AVAILABLE PERIPHERALS

The peripherals managed by the Peripheral Pin Select are all digital only peripherals. These include general serial communications (UART and SPI), general purpose timer clock inputs, timer-related peripherals (input capture and output compare) and interrupt-on-change inputs.

In comparison, some digital only peripheral modules are never included in the Peripheral Pin Select feature. This is because the peripheral's function requires special I/O circuitry on a specific port and cannot be easily connected to multiple pins. One example includes I^2C modules. A similar requirement excludes all modules with analog inputs, such as the A/D Converter (ADC)

A key difference between remappable and non-remappable peripherals is that remappable peripherals are not associated with a default I/O pin. The peripheral must always be assigned to a specific I/O pin before it can be used. In contrast, non-remappable peripherals are always available on a default pin, assuming that the peripheral is active and not conflicting with another peripheral.

When a remappable peripheral is active on a given I/O pin, it takes priority over all other digital I/Os and digital communication peripherals associated with the pin. Priority is given regardless of the type of peripheral that is mapped. Remappable peripherals never take priority over any analog functions associated with the pin.

8.5.3 CONTROLLING CONFIGURATION CHANGES

Because peripheral mapping can be changed during run time, some restrictions on peripheral remapping are needed to prevent accidental configuration changes. The dsPIC33CK64MP105 devices have implemented the control register lock sequence.

After a Reset, writes to the RPINRx and RPORx registers are allowed, but they can be disabled by setting the IOLOCK bit (RPCON[11]). Attempted writes with the IOLOCK bit set will appear to execute normally, but the contents of the registers will remain unchanged. Setting IOLOCK prevents writes to the control registers; clearing IOLOCK allows writes. To set or clear IOLOCK, the NVMKEY unlock sequence must be executed:

1. Write 0x55 to NVMKEY.
2. Write 0xAA to NVMKEY.
3. Clear (or set) IOLOCK as a single operation.

Note: XC16 compiler provides a built-in C language function for unlocking and modifying the RPCON register:
`__builtin_write_RPCON(value);`
For more information, see the XC16 compiler help files.

8.5.4 INPUT MAPPING

The inputs of the Peripheral Pin Select options are mapped on the basis of the peripheral. That is, a control register associated with a peripheral dictates the pin it will be mapped to. The RPINRx registers are used to configure peripheral input mapping. Each register contains sets of 8-bit fields, with each set associated with one of the remappable peripherals. Programming a given peripheral's bit field with an appropriate 8-bit index value maps the RPn pin with the corresponding value, or internal signal, to that peripheral. See Table 8-4 for a list of available inputs.

For example, Figure 8-2 illustrates remappable pin selection for the U1RX input.

FIGURE 8-2: REMAPPABLE INPUT FOR U1RX

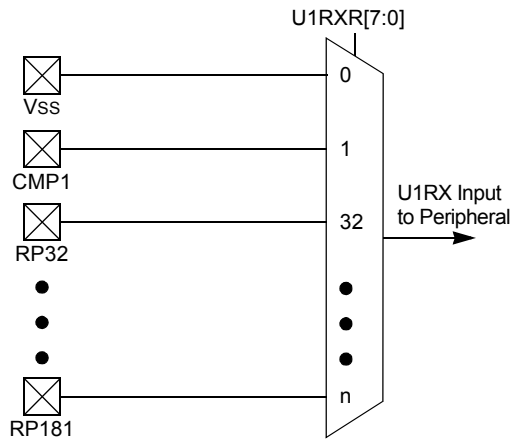

Note: For input only, Peripheral Pin Select functionality does not have priority over TRISx settings. Therefore, when configuring an RPn pin for input, the corresponding bit in the TRISx register must also be configured for input (set to '1').
Physical connection to a pin can be made through RP32 through RP77. There are internal signals and virtual pins that can be connected to an input. Table 8-4 shows the details of the input assignment.

© 2018-2019 Microchip Technology Inc.

TABLE 8-4: REMAPPABLE PIN INPUTS

RPINRx[15:8] or RPINRx[7:0]	Function	Available on Ports
0	VSS	Internal
1	Comparator 1	Internal
2	Comparator 2	Internal
3	Comparator 3	Internal
4-5	RP4-RP5	Reserved
6	PTG Trigger 26	Internal
7	PTG Trigger 27	Internal
8-10	RP8-RP10	Reserved
11	PWM Event Out C	Internal
12	PWM Event Out D	Internal
13	PWM Event Out E	Internal
14-31	RP14-RP31	Reserved
32	RP32	Port Pin RB0
33	RP33	Port Pin RB1
34	RP34	Port Pin RB2
35	RP35	Port Pin RB3
36	RP36	Port Pin RB4
37	RP37	Port Pin RB5
38	RP38	Port Pin RB6
39	RP39	Port Pin RB7
40	RP40	Port Pin RB8
41	RP41	Port Pin RB9
42	RP42	Port Pin RB10
43	RP43	Port Pin RB11
44	RP44	Port Pin RB12
45	RP45	Port Pin RB13
46	RP46	Port Pin RB14
47	RP47	Port Pin RB15
48	RP48	Port Pin RC0
49	RP49	Port Pin RC1
50	RP50	Port Pin RC2
51	RP51	Port Pin RC3
52	RP52	Port Pin RC4
53	RP53	Port Pin RC5
54	RP54	Port Pin RC6
55	RP55	Port Pin RC7
56	RP56	Port Pin RC8
57	RP57	Port Pin RC9
58	RP58	Port Pin RC10
59	RP59	Port Pin RC11
60	RP60	Port Pin RC12
61	RP61	Port Pin RC13

© 2018-2019 Microchip Technology Inc.

TABLE 8-4: REMAPPABLE PIN INPUTS (CONTINUED)

RPINRx[15:8] or RPINRx[7:0]	Function	Available on Ports
62-64	RP62-RP64	Reserved
65	RP65	Port Pin RD1
66-71	RP66-RP71	Reserved
72	RP72	Port Pin RD8
73	RP73	Reserved
74	RP74	Port Pin RD10
75-76	RP75-RP76	Reserved
77	RP77	Port Pin RD13
78-175	RP78-RP175	Reserved
176	RP176	Virtual RPV0
177	RP177	Virtual RPV1
178	RP178	Virtual RPV2
179	RP179	Virtual RPV3
180	RP180	Virtual RPV4
181	RP181	Virtual RPV5

8.5.5 VIRTUAL CONNECTIONS

The dsPIC33CK64MP105 devices support six virtual RPn pins (RP176-RP181), which are identical in functionality to all other RPn pins, with the exception of pinouts. These six pins are internal to the devices and are not connected to a physical device pin.

These pins provide a simple way for inter-peripheral connection without utilizing a physical pin. For example, the output of the analog comparator can be connected to RP176 and the PWM Fault input can be configured for RP176 as well. This configuration allows the analog comparator to trigger PWM Faults without the use of an actual physical pin on the device.

© 2018-2019 Microchip Technology Inc.

TABLE 8-5: SELECTABLE INPUT SOURCES (MAPS INPUT TO FUNCTION)

Input Name[1]	Function Name	Register	Register Bits
External Interrupt 1	INT1	RPINR0	INT1R[7:0]
External Interrupt 2	INT2	RPINR1	INT2R[7:0]
External Interrupt 3	INT3	RPINR1	INT3R[7:0]
Timer1 External Clock	T1CK	RPINR2	T1CK[7:0]
SCCP Timer1	TCKI1	RPINR3	TCKI1R[7:0]
SCCP Capture 1	ICM1	RPINR3	ICM1R[7:0]
SCCP Timer2	TCKI2	RPINR4	TCKI2R[7:0]
SCCP Capture 2	ICM2	RPINR4	ICM2R[7:0]
SCCP Timer3	TCKI3	RPINR5	TCKI3R[7:0]
SCCP Capture 3	ICM3	RPINR5	ICM3R[7:0]
SCCP Timer4	TCKI4	RPINR6	TCKI4R[7:0]
SCCP Capture 4	ICM4	RPINR6	ICM4R[7:0]
MCCP Timer5	TCKI5	RPINR7	TCKI5R[7:0]
MCCP Capture 5	ICM5	RPINR7	ICM5R[7:0]
xCCP Fault A	OCFA	RPINR11	OCFAR[7:0]
xCCP Fault B	OCFB	RPINR11	OCFBR[7:0]
PWM PCI Input 8	PCI8	RPINR12	PCI8R[7:0]
PWM PCI Input 9	PCI9	RPINR12	PCI9R[7:0]
PWM PCI Input 10	PCI10	RPINR13	PCI10R[7:0]
PWM PCI Input 11	PCI11	RPINR13	PCI11R[7:0]
QEI1 Input A	QEIA1	RPINR14	QEIA1R[7:0]
QEI1 Input B	QEIB1	RPINR14	QEIB1R[7:0]
QEI1 Index 1 Input	QEINDX1	RPINR15	QEINDX1R[7:0]
QEI1 Home 1 Input	QEIHOM1	RPINR15	QEIHOM1R[7:0]
QEI2 Input A	QEIA2	RPINR16	QEIA2R[7:0]
QEI2 Input B	QEIB2	RPINR16	QEIB2R[7:0]
QEI2 Index 1 Input	QEINDX2	RPINR17	QEINDX2R[7:0]
QEI2 Home 1 Input	QEIHOM2	RPINR17	QEIHOM2R[7:0]
UART1 Receive	U1RX	RPINR18	U1RXR[7:0]
UART1 Data-Set-Ready	$\overline{\text{U1DSR}}$	RPINR18	U1DSRR[7:0]
UART2 Receive	U2RX	RPINR19	U2RXR[7:0]
UART2 Data-Set-Ready	$\overline{\text{U2DSR}}$	RPINR19	U2DSRR[7:0]
SPI1 Data Input	SDI1	RPINR20	SDI1R[7:0]
SPI1 Clock Input	SCK1IN	RPINR20	SCK1R[7:0]
SPI1 Slave Select	$\overline{\text{SS1}}$	RPINR21	SS1R[7:0]
Reference Clock Input	REFCLKI	RPINR21	REFOIR[7:0]
SPI2 Data Input	SDI2	RPINR22	SDI2R[7:0]
SPI2 Clock Input	SCK2IN	RPINR22	SCK2R[7:0]
SPI2 Slave Select	$\overline{\text{SS2}}$	RPINR23	SS2R[7:0]
UART3 Receive	U3RX	RPINR27	U3RXR[7:0]
UART3 Data-Set-Ready	$\overline{\text{U3DSR}}$	RPINR27	U3DSRR[7:0]

Note 1: Unless otherwise noted, all inputs use the Schmitt Trigger input buffers.

TABLE 8-5: SELECTABLE INPUT SOURCES (MAPS INPUT TO FUNCTION) (CONTINUED)

Input Name[1]	Function Name	Register	Register Bits
SPI3 Data Input	SDI3	RPINR29	SDI3R[7:0]
SPI3 Clock Input	SCK3IN	RPINR29	SCK3R[7:0]
SPI3 Slave Select	$\overline{SS3}$	RPINR30	SS3R[7:0]
xCCP Fault C	OCFC	RPINR37	OCFCR[7:0]
PWM PCI Input 17	PCI17	RPINR37	PCI17R[7:0]
PWM PCI Input 18	PCI18	RPINR38	PCI18R[7:0]
PWM PCI Input 12	PCI12	RPINR42	PCI12R[7:0]
PWM PCI Input 13	PCI13	RPINR42	PCI13R[7:0]
PWM PCI Input 14	PCI14	RPINR43	PCI14R[7:0]
PWM PCI Input 15	PCI15	RPINR43	PCI15R[7:0]
PWM PCI Input 16	PCI16	RPINR44	PCI16R[7:0]
SENT1 Input	SENT1	RPINR44	SENT1R[7:0]
SENT2 Input	SENT2	RPINR45	SENT2R[7:0]
CLC Input A	CLCINA	RPINR45	CLCINAR[7:0]
CLC Input B	CLCINB	RPINR46	CLCINBR[7:0]
CLC Input C	CLCINC	RPINR46	CLCINCR[7:0]
CLC Input D	CLCIND	RPINR47	CLCINDR[7:0]
ADC Trigger Input (ADTRIG31)	ADCTRG	RPINR47	ADCTRGR[7:0]
xCCP Fault D	OCFD	RPINR48	OCFDR[7:0]
UART1 Clear-to-Send	$\overline{U1CTS}$	RPINR48	U1CTSR[7:0]
UART2 Clear-to-Send	$\overline{U2CTS}$	RPINR49	U2CTSR[7:0]
UART3 Clear-to-Send	$\overline{U3CTS}$	RPINR49	U3CTSR[7:0]

Note 1: Unless otherwise noted, all inputs use the Schmitt Trigger input buffers.

© 2018-2019 Microchip Technology Inc.

8.5.6 OUTPUT MAPPING

In contrast to inputs, the outputs of the Peripheral Pin Select options are mapped on the basis of the pin. In this case, a control register associated with a particular pin dictates the peripheral output to be mapped. The RPORx registers are used to control output mapping. Each register contains sets of 6-bit fields, with each set associated with one RPn pin (see Register 8-48 through Register 8-67). The value of the bit field corresponds to one of the peripherals and that peripheral's output is mapped to the pin (see Table 8-7 and Figure 8-3).

A null output is associated with the output register Reset value of '0'. This is done to ensure that remappable outputs remain disconnected from all output pins by default.

FIGURE 8-3: MULTIPLEXING REMAPPABLE OUTPUTS FOR RPn

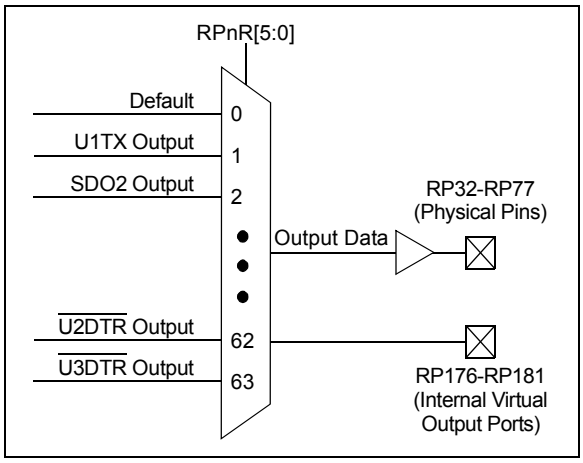

Note 1: There are six virtual output ports which are not connected to any I/O ports (RP176-RP181). These virtual ports can be accessed by RPOR17, RPOR18 and RPOR19.

8.5.7 MAPPING LIMITATIONS

The control schema of the peripheral select pins is not limited to a small range of fixed peripheral configurations. There are no mutual or hardware-enforced lockouts between any of the peripheral mapping SFRs. Literally, any combination of peripheral mappings, across any or all of the RPn pins, is possible. This includes both many-to-one and one-to-many mappings of peripheral inputs, and outputs to pins. While such mappings may be technically possible from a configuration point of view, they may not be supportable from an electrical point of view (see Table 8-6).

TABLE 8-6: REMAPPABLE OUTPUT PIN REGISTERS

Register	RP Pin	I/O Port
RPOR0[5:0]	RP32	Port Pin RB0
RPOR0[13:8]	RP33	Port Pin RB1
RPOR1[5:0]	RP34	Port Pin RB2
RPOR1[13:8]	RP35	Port Pin RB3
RPOR2[5:0]	RP36	Port Pin RB4
RPOR2[13:8]	RP37	Port Pin RB5
RPOR3[5:0]	RP38	Port Pin RB6
RPOR3[13:8]	RP39	Port Pin RB7
RPOR4[5:0]	RP40	Port Pin RB8
RPOR4[13:8]	RP41	Port Pin RB9
RPOR5[5:0]	RP42	Port Pin RB10
RPOR5[13:8]	RP43	Port Pin RB11
RPOR6[5:0]	RP44	Port Pin RB12
RPOR6[13:8]	RP45	Port Pin RB13
RPOR7[5:0]	RP46	Port Pin RB14
RPOR7[13:8]	RP47	Port Pin RB15
RPOR8[5:0]	RP48	Port Pin RC0
RPOR8[13:8]	RP49	Port Pin RC1
RPOR9[5:0]	RP50	Port Pin RC2
RPOR9[13:8]	RP51	Port Pin RC3
RPOR10[5:0]	RP52	Port Pin RC4
RPOR10[13:8]	RP53	Port Pin RC5
RPOR11[5:0]	RP54	Port Pin RC6
RPOR11[13:8]	RP55	Port Pin RC7
RPOR12[5:0]	RP56	Port Pin RC8
RPOR12[13:8]	RP57	Port Pin RC9
RPOR13[5:0]	RP58	Port Pin RC10
RPOR13[13:8]	RP59	Port Pin RC11
RPOR14[5:0]	RP60	Port Pin RC12
RPOR14[13:8]	RP61	Port Pin RC13
RPOR15[5:0]	RP65	Port Pin RD1
RPOR15[13:8]	RP72	Port Pin RD8
RPOR16[5:0]	RP74	Port Pin D10
RPOR16[13:8]	RP77	Port Pin RD13
RPOR17[5:0]	RP176	Virtual Pin RPV0
RPOR17[13:8]	RP177	Virtual Pin RPV1
RPOR18[5:0]	RP178	Virtual Pin RPV2
RPOR18[13:8]	RP179	Virtual Pin RPV3
RPOR19[5:0]	RP180	Virtual Pin RPV4
RPOR19[13:8]	RP181	Virtual Pin RPV5

© 2018-2019 Microchip Technology Inc.

TABLE 8-7: OUTPUT SELECTION FOR REMAPPABLE PINS (RPn)

Function	RPnR[5:0]	Output Name
Not Connected	0	Not Connected
U1TX	1	RPn tied to UART1 Transmit
$\overline{\text{U1RTS}}$	2	RPn tied to UART1 Request-to-Send
U2TX	3	RPn tied to UART2 Transmit
$\overline{\text{U2RTS}}$	4	RPn tied to UART2 Request-to-Send
SDO1	5	RPn tied to SPI1 Data Output
SCK1	6	RPn tied to SPI1 Clock Output
$\overline{\text{SS1}}$	7	RPn tied to SPI1 Slave Select
SDO2	8	RPn tied to SPI2 Data Output
SCK2	9	RPn tied to SPI2 Clock Output
$\overline{\text{SS2}}$	10	RPn tied to SPI2 Slave Select
SDO3	11	RPn tied to SPI3 Data Output
SCK3	12	RPn tied to SPI3 Clock Output
$\overline{\text{SS3}}$	13	RPn tied to SPI3 Slave Select
REFCLKO	14	RPn tied to Reference Clock Output
OCM1A	15	RPn tied to SCCP1 Output
OCM2A	16	RPn tied to SCCP2 Output
OCM3A	17	RPn tied to SCCP3 Output
OCM4A	18	RPn tied to SCCP4 Output
CMP1	23	RPn tied to Comparator 1 Output
CMP2	24	RPn tied to Comparator 2 Output
CMP3	25	RPn tied to Comparator 3 Output
U3TX	27	RPn tied to UART3 Transmit
$\overline{\text{U3RTS}}$	28	RPn tied to UART3 Request-to-Send
PWM4H	34	RPn tied to PWM4H Output
PWM4L	35	RPn tied to PWM4L Output
PWMEA	36	RPn tied to PWM Event A Output
PWMEB	37	RPn tied to PWM Event B Output
QEICMP1	38	RPn tied to QEI1 Comparator Output
QEICMP2	39	RPn tied to QEI2 Comparator Output
CLC1OUT	40	RPn tied to CLC1 Output
CLC2OUT	41	RPn tied to CLC2 Output
PWMEC	44	RPn tied to PWM Event C Output
PWMED	45	RPn tied to PWM Event D Output
PTGTRG24	46	PTG Trigger Output 24
PTGTRG25	47	PTG Trigger Output 25
SENT1OUT	48	RPn tied to SENT1 Output
SENT2OUT	49	RPn tied to SENT2 Output
OCM5A	50	RPn tied to MCCP5 Output A
OCM5B	51	RPn tied to MCCP5 Output B
OCM5C	52	RPn tied to MCCP5 Output C
OCM5D	53	RPn tied to MCCP5 Output D

TABLE 8-7: OUTPUT SELECTION FOR REMAPPABLE PINS (RPn) (CONTINUED)

Function	RPnR[5:0]	Output Name
OCM5E	54	RPn tied to MCCP5 Output E
OCM5F	55	RPn tied to MCCP5 Output F
CLC3OUT	59	RPn tied to CLC4 Output
CLC4OUT	60	RPn tied to CLC4 Output
$\overline{\text{U1DTR}}$	61	RPn tied to UART1 DTR
$\overline{\text{U2DTR}}$	62	RPn tied to UART2 DTR
$\overline{\text{U3DTR}}$	63	RPn tied to UART3 DTR

© 2018-2019 Microchip Technology Inc.

8.5.8 I/O HELPFUL TIPS

1. In some cases, certain pins, as defined in Table 31-15 under “Injection Current”, have internal protection diodes to VDD and VSS. The term, “Injection Current”, is also referred to as “Clamp Current”. On designated pins, with sufficient external current-limiting precautions by the user, I/O pin input voltages are allowed to be greater or lesser than the data sheet absolute maximum ratings, with respect to the VSS and VDD supplies. Note that when the user application forward biases either of the high or low-side internal input clamp diodes, that the resulting current being injected into the device that is clamped internally by the VDD and VSS power rails, may affect the ADC accuracy by four to six counts.
2. I/O pins that are shared with any analog input pin (i.e., ANx) are always analog pins, by default, after any Reset. Consequently, configuring a pin as an analog input pin automatically disables the digital input pin buffer and any attempt to read the digital input level by reading PORTx or LATx will always return a ‘0’, regardless of the digital logic level on the pin. To use a pin as a digital I/O pin on a shared ANx pin, the user application needs to configure the Analog Select for PORTx registers in the I/O ports module (i.e., ANSELx) by setting the appropriate bit that corresponds to that I/O port pin to a ‘0’.

Note:	Although it is not possible to use a digital input pin when its analog function is enabled, it is possible to use the digital I/O output function, TRISx = 0x0, while the analog function is also enabled. However, this is not recommended, particularly if the analog input is connected to an external analog voltage source, which would create signal contention between the analog signal and the output pin driver.

3. Most I/O pins have multiple functions. Referring to the device pin diagrams in this data sheet, the priorities of the functions allocated to any pins are indicated by reading the pin name, from left-to-right. The left most function name takes precedence over any function to its right in the naming convention. For example: AN16/T2CK/T7CK/RC1; this indicates that AN16 is the highest priority in this example and will supersede all other functions to its right in the list. Those other functions to its right, even if enabled, would not work as long as any other function to its left was enabled. This rule applies to all of the functions listed for a given pin.
4. Each pin has an internal weak pull-up resistor and pull-down resistor that can be configured using the CNPUx and CNPDx registers, respectively. These resistors eliminate the need for external resistors in certain applications. The internal pull-up is up to ~(VDD – 0.8), not VDD. This value is still above the minimum VIH of CMOS and TTL devices.
5. When driving LEDs directly, the I/O pin can source or sink more current than what is specified in the VOH/IOH and VOL/IOL DC characteristics specification. The respective IOH and IOL current rating only applies to maintaining the corresponding output at or above the VOH, and at or below the VOL levels. However, for LEDs, unlike digital inputs of an externally connected device, they are not governed by the same minimum VIH/VIL levels. An I/O pin output can safely sink or source any current less than that listed in the Absolute Maximum Ratings in **Section 31.0 “Electrical Characteristics”** of this data sheet. For example:

   VOH = 2.4v @ IOH = -8 mA and VDD = 3.3V

   The maximum output current sourced by any 8 mA I/O pin = 12 mA.

   LED source current < 12 mA is technically permitted.

6. The Peripheral Pin Select (PPS) pin mapping rules are as follows:
   a) Only one “output” function can be active on a given pin at any time, regardless if it is a dedicated or remappable function (one pin, one output).
   b) It is possible to assign a “remappable output” function to multiple pins and externally short or tie them together for increased current drive.
   c) If any “dedicated output” function is enabled on a pin, it will take precedence over any remappable “output” function.
   d) If any “dedicated digital” (input or output) function is enabled on a pin, any number of “input” remappable functions can be mapped to the same pin.
   e) If any “dedicated analog” function(s) are enabled on a given pin, “digital input(s)” of any kind will all be disabled, although a single “digital output”, at the user’s cautionary discretion, can be enabled and active as long as there is no signal contention with an external analog input signal. For example, it is possible for the ADC to convert the digital output logic level, or to toggle a digital output on a comparator or ADC input, provided there is no external analog input, such as for a Built-In Self-Test (BIST).
   f) Any number of “input” remappable functions can be mapped to the same pin(s) at the same time, including to any pin with a single output from either a dedicated or remappable “output”.
   g) The TRISx registers control *only* the digital I/O output buffer. Any other dedicated or remappable active “output” will automatically override the TRISx setting. The TRISx register *does not* control the digital logic “input” buffer. Remappable digital “inputs” do not automatically override TRISx settings, which means that the TRISx bit must be set to input for pins with only remappable input function(s) assigned.
   h) All analog pins are enabled by default after any Reset and the corresponding digital input buffer on the pin has been disabled. Only the Analog Select for PORTx (ANSELx) registers control the digital input buffer, *not* the TRISx register. The user must disable the analog function on a pin using the Analog Select for PORTx registers in order to use any “digital input(s)” on a corresponding pin, no exceptions.

8.5.9 I/O PORTS RESOURCES

Many useful resources are provided on the main product page of the Microchip website for the devices listed in this data sheet. This product page contains the latest updates and additional information.

8.5.9.1 Key Resources

- **“I/O Ports with Edge Detect”** (www.microchip.com/DS70005322) in the *“dsPIC33/PIC24 Family Reference Manual”*
- Code Samples
- Application Notes
- Software Libraries
- Webinars
- All Related *“dsPIC33/PIC24 Family Reference Manual”* Sections
- Development Tools

© 2018-2019 Microchip Technology Inc.

TABLE 8-8: PORTA REGISTER SUMMARY

Register	Bit 15	Bit 14	Bit 13	Bit 12	Bit 11	Bit 10	Bit 9	Bit 8	Bit 7	Bit 6	Bit 5	Bit 4	Bit 3	Bit 2	Bit 1	Bit 0
ANSELA	—	—	—	—	—	—	—	—	—	—	—	ANSELA[4:0]				
TRISA	—	—	—	—	—	—	—	—	—	—	—	TRISA[4:0]				
PORTA	—	—	—	—	—	—	—	—	—	—	—	RA[4:0]				
LATA	—	—	—	—	—	—	—	—	—	—	—	LATA[4:0]				
ODCA	—	—	—	—	—	—	—	—	—	—	—	ODCA[4:0]				
CNPUA	—	—	—	—	—	—	—	—	—	—	—	CNPUA[4:0]				
CNPDA	—	—	—	—	—	—	—	—	—	—	—	CNPDA[4:0]				
CNCONA	ON	—	—	—	CNSTYLE	—	—	—	—	—	—	—	—	—	—	—
CNEN0A	—	—	—	—	—	—	—	—	—	—	—	CNEN0A[4:0]				
CNSTATA	—	—	—	—	—	—	—	—	—	—	—	CNSTATA[4:0]				
CNEN1A	—	—	—	—	—	—	—	—	—	—	—	CNEN1A[4:0]				
CNFA	—	—	—	—	—	—	—	—	—	—	—	CNFA[4:0]				

TABLE 8-9: PORTB REGISTER SUMMARY

Register	Bit 15	Bit 14	Bit 13	Bit 12	Bit 11	Bit 10	Bit 9	Bit 8	Bit 7	Bit 6	Bit 5	Bit 4	Bit 3	Bit 2	Bit 1	Bit 0
ANSELB	—	—	—	—	—	—	ANSELB[9:7]			—	—	ANSELB[4:0]				
TRISB	TRISB[15:0]															
PORTB	RB[15:0]															
LATB	LATB[15:0]															
ODCB	ODCB[15:0]															
CNPUB	CNPUB[15:0]															
CNPDB	CNPDB[15:0]															
CNCONB	ON	—	—	—	CNSTYLE	—	—	—	—	—	—	—	—	—	—	—
CNEN0B	CNEN0[15:0]															
CNSTATB	CNSTATB[15:0]															
CNEN1B	CNEN1B[15:0]															
CNFB	CNFB[15:0]															

© 2018-2019 Microchip Technology Inc.

TABLE 8-10: PORTC REGISTER SUMMARY

Register	Bit 15	Bit 14	Bit 13	Bit 12	Bit 11	Bit 10	Bit 9	Bit 8	Bit 7	Bit 6	Bit 5	Bit 4	Bit 3	Bit 2	Bit 1	Bit 0
ANSELC	—	—	—	—	—	—	—	—	ANSELC[7:6]		—	—	ANSELC[3:0]			
TRISC	—	—	TRISC[13:0]													
PORTC	—	—	RC[13:0]													
LATC	—	—	LATC[13:0]													
ODCC	—	—	ODCC[13:0]													
CNPUC	—	—	CNPUC[13:0]													
CNPDC	—	—	CNPDC[13:0]													
CNCONC	ON	—	—	—	CNSTYLE	—	—	—	—	—	—	—	—	—	—	—
CNEN0C	—	—	CNEN0C[13:0]													
CNSTATC	—	—	CNSTATC[13:0]													
CNEN1C	—	—	CNEN1C[13:0]													
CNFC	—	—	CNFC[13:0]													

TABLE 8-11: PORTD REGISTER SUMMARY

Register	Bit 15	Bit 14	Bit 13	Bit 12	Bit 11	Bit 10	Bit 9	Bit 8	Bit 7	Bit 6	Bit 5	Bit 4	Bit 3	Bit 2	Bit 1	Bit 0
ANSELD	—	—	ANSELD13	—	—	ANSELD10	—	—	—	—	—	—	—	—	—	—
TRISD	—	—	TRISD13	—	—	TRISD10	—	TRISD8	—	—	—	—	—	—	TRISD1	—
PORTD	—	—	RD13	—	—	RD10	—	RD8	—	—	—	—	—	—	RD1	—
LATD	—	—	LATD13	—	—	LATD10	—	LATD8	—	—	—	—	—	—	LATD1	—
ODCD	—	—	ODCD13	—	—	ODCD10	—	ODCD8	—	—	—	—	—	—	ODCD1	—
CNPUD	—	—	CNPUD13	—	—	CNPUD10	—	CNPUD8	—	—	—	—	—	—	CNPUD1	—
CNPDD	—	—	CNPDD13	—	—	CNPDD10	—	CNPDD8	—	—	—	—	—	—	CNPDD1	—
CNCOND	ON	—	—	—	CNSTYLE	—	—	—	—	—	—	—	—	—	—	—
CNEN0D	—	—	CNEN0D13	—	—	CNEN0D10	—	CNEN0D8	—	—	—	—	—	—	CNEN0D1	—
CNSTATD	—	—	CNSTATD13	—	—	CNSTATD10	—	CNSTATD8	—	—	—	—	—	—	CNSTATD1	—
CNEN1D	—	—	CNEN1D13	—	—	CNEN1D10	—	CNEN1D8	—	—	—	—	—	—	CNEN1D1	—
CNFD	—	—	CNFD13	—	—	CNFD10	—	CNFD8							CNFD1	—

© 2018-2019 Microchip Technology Inc.

8.5.10 PERIPHERAL PIN SELECT REGISTERS

REGISTER 8-13: RPCON: PERIPHERAL REMAPPING CONFIGURATION REGISTER(1)

U-0	U-0	U-0	U-0	R/W-0	U-0	U-0	U-0
—	—	—	—	IOLOCK	—	—	—
bit 15							bit 8

U-0	U-0	U-0	U-0	U-0	U-0	U-0	U-0
—	—	—	—	—	—	—	—
bit 7							bit 0

Legend:			
R = Readable bit	W = Writable bit	U = Unimplemented bit, read as ‘0’	
-n = Value at POR	‘1’ = Bit is set	‘0’ = Bit is cleared	x = Bit is unknown

bit 15-12 **Unimplemented:** Read as ‘0’

bit 11 **IOLOCK:** Peripheral Remapping Register Lock bit
1 = All Peripheral Remapping registers are locked and cannot be written
0 = All Peripheral Remapping registers are unlocked and can be written

bit 10-0 **Unimplemented:** Read as ‘0’

Note 1: Writing to this register needs an unlock sequence.

REGISTER 8-14: RPINR0: PERIPHERAL PIN SELECT INPUT REGISTER 0

R/W-0	R/W-0	R/W-0	R/W-0	R/W-0	R/W-0	R/W-0	R/W-0
INT1R7	INT1R6	INT1R5	INT1R4	INT1R3	INT1R2	INT1R1	INT1R0
bit 15							bit 8

U-0	U-0	U-0	U-0	U-0	U-0	U-0	U-0
—	—	—	—	—	—	—	—
bit 7							bit 0

Legend:			
R = Readable bit	W = Writable bit	U = Unimplemented bit, read as ‘0’	
-n = Value at POR	‘1’ = Bit is set	‘0’ = Bit is cleared	x = Bit is unknown

bit 15-8 **INT1R[7:0]:** Assign External Interrupt 1 (INT1) to the Corresponding RPn Pin bits
See Table 8-4.

bit 7-0 **Unimplemented:** Read as ‘0’

REGISTER 8-15: RPINR1: PERIPHERAL PIN SELECT INPUT REGISTER 1

R/W-0	R/W-0	R/W-0	R/W-0	R/W-0	R/W-0	R/W-0	R/W-0
INT3R7	INT3R6	INT3R5	INT3R4	INT3R3	INT3R2	INT3R1	INT3R0
bit 15							bit 8

R/W-0	R/W-0	R/W-0	R/W-0	R/W-0	R/W-0	R/W-0	R/W-0
INT2R7	INT2R6	INT2R5	INT2R4	INT2R3	INT2R2	INT2R1	INT2R0
bit 7							bit 0

Legend:			
R = Readable bit	W = Writable bit	U = Unimplemented bit, read as ‘0’	
-n = Value at POR	‘1’ = Bit is set	‘0’ = Bit is cleared	x = Bit is unknown

bit 15-8 **INT3R[7:0]:** Assign External Interrupt 3 (INT3) to the Corresponding RPn Pin bits
See Table 8-4.

bit 7-0 **INT2R[7:0]:** Assign External Interrupt 2 (INT2) to the Corresponding RPn Pin bits
See Table 8-4.

REGISTER 8-16: RPINR2: PERIPHERAL PIN SELECT INPUT REGISTER 2

R/W-0	R/W-0	R/W-0	R/W-0	R/W-0	R/W-0	R/W-0	R/W-0
T1CKR7	T1CKR6	T1CKR5	T1CKR4	T1CKR3	T1CKR2	T1CKR1	T1CKR0
bit 15							bit 8

U-0	U-0	U-0	U-0	U-0	U-0	U-0	U-0
—	—	—	—	—	—	—	—
bit 7							bit 0

Legend:			
R = Readable bit	W = Writable bit	U = Unimplemented bit, read as ‘0’	
-n = Value at POR	‘1’ = Bit is set	‘0’ = Bit is cleared	x = Bit is unknown

bit 15-8 **T1CKR[7:0]:** Assign Timer1 External Clock (T1CK) to the Corresponding RPn Pin bits
See Table 8-4.

bit 7-0 **Unimplemented:** Read as ‘0’

© 2018-2019 Microchip Technology Inc.

REGISTER 8-17: RPINR3: PERIPHERAL PIN SELECT INPUT REGISTER 3

R/W-0	R/W-0	R/W-0	R/W-0	R/W-0	R/W-0	R/W-0	R/W-0
ICM1R7	ICM1R6	ICM1R5	ICM1R4	ICM1R3	ICM1R2	ICM1R1	ICM1R0
bit 15							bit 8

R/W-0	R/W-0	R/W-0	R/W-0	R/W-0	R/W-0	R/W-0	R/W-0
TCKI1R7	TCKI1R6	TCKI1R5	TCKI1R4	TCKI1R3	TCKI1R2	TCKI1R1	TCKI1R0
bit 7							bit 0

Legend:			
R = Readable bit	W = Writable bit	U = Unimplemented bit, read as ‘0’	
-n = Value at POR	‘1’ = Bit is set	‘0’ = Bit is cleared	x = Bit is unknown

bit 15-8 **ICM1R[7:0]:** Assign SCCP Capture 1 (ICM1) Input to the Corresponding RPn Pin bits
See Table 8-4.

bit 7-0 **TCKI1[7:0]:** Assign SCCP Timer1 (TCKI1) Input to the Corresponding RPn Pin bits
See Table 8-4.

REGISTER 8-18: RPINR4: PERIPHERAL PIN SELECT INPUT REGISTER 4

R/W-0	R/W-0	R/W-0	R/W-0	R/W-0	R/W-0	R/W-0	R/W-0
ICM2R7	ICM2R6	ICM2R5	ICM2R4	ICM2R3	ICM2R2	ICM2R1	ICM2R0
bit 15							bit 8

R/W-0	R/W-0	R/W-0	R/W-0	R/W-0	R/W-0	R/W-0	R/W-0
TCKI2R7	TCKI2R6	TCKI2R5	TCKI2R4	TCKI2R3	TCKI2R2	TCKI2R1	TCKI2R0
bit 7							bit 0

Legend:			
R = Readable bit	W = Writable bit	U = Unimplemented bit, read as ‘0’	
-n = Value at POR	‘1’ = Bit is set	‘0’ = Bit is cleared	x = Bit is unknown

bit 15-8 **ICM2R[7:0]:** Assign SCCP Capture 2 (ICM2) Input to the Corresponding RPn Pin bits
See Table 8-4.

bit 7-0 **TCKI2R[7:0]:** Assign SCCP Timer2 (TCKI2) Input to the Corresponding RPn Pin bits
See Table 8-4.

REGISTER 8-19: RPINR5: PERIPHERAL PIN SELECT INPUT REGISTER 5

R/W-0	R/W-0	R/W-0	R/W-0	R/W-0	R/W-0	R/W-0	R/W-0
ICM3R7	ICM3R6	ICM3R5	ICM3R4	ICM3R3	ICM3R2	ICM3R1	ICM3R0
bit 15							bit 8

R/W-0	R/W-0	R/W-0	R/W-0	R/W-0	R/W-0	R/W-0	R/W-0
TCKI3R7	TCKI3R6	TCKI3R5	TCKI3R4	TCKI3R3	TCKI3R2	TCKI3R1	TCKI3R0
bit 7							bit 0

Legend:			
R = Readable bit	W = Writable bit	U = Unimplemented bit, read as ‘0’	
-n = Value at POR	‘1’ = Bit is set	‘0’ = Bit is cleared	x = Bit is unknown

bit 15-8 **ICM3R[7:0]:** Assign SCCP Capture 3 (ICM3) Input to the Corresponding RPn Pin bits
See Table 8-4.

bit 7-0 **TCKI3R[7:0]:** Assign SCCP Timer3 (TCKI3) Input to the Corresponding RPn Pin bits
See Table 8-4.

REGISTER 8-20: RPINR6: PERIPHERAL PIN SELECT INPUT REGISTER 6

R/W-0	R/W-0	R/W-0	R/W-0	R/W-0	R/W-0	R/W-0	R/W-0
ICM4R7	ICM4R6	ICM4R5	ICM4R4	ICM4R3	ICM4R2	ICM4R1	ICM4R0
bit 15							bit 8

R/W-0	R/W-0	R/W-0	R/W-0	R/W-0	R/W-0	R/W-0	R/W-0
TCKI4R7	TCKI4R6	TCKI4R5	TCKI4R4	TCKI4R3	TCKI4R2	TCKI4R1	TCKI4R0
bit 7							bit 0

Legend:			
R = Readable bit	W = Writable bit	U = Unimplemented bit, read as ‘0’	
-n = Value at POR	‘1’ = Bit is set	‘0’ = Bit is cleared	x = Bit is unknown

bit 15-8 **ICM4R[7:0]:** Assign SCCP Capture 4 (ICM4) Input to the Corresponding RPn Pin bits
See Table 8-4.

bit 7-0 **TCKI4R[7:0]:** Assign SCCP Timer4 (TCKI4) Input to the Corresponding RPn Pin bits
See Table 8-4.

© 2018-2019 Microchip Technology Inc.

REGISTER 8-21: RPINR7: PERIPHERAL PIN SELECT INPUT REGISTER 7

R/W-0	R/W-0	R/W-0	R/W-0	R/W-0	R/W-0	R/W-0	R/W-0
ICM5R7	ICM5R6	ICM5R5	ICM5R4	ICM5R3	ICM5R2	ICM5R1	ICM5R0
bit 15							bit 8

R/W-0	R/W-0	R/W-0	R/W-0	R/W-0	R/W-0	R/W-0	R/W-0
TCKI5R7	TCKI5R6	TCKI5R5	TCKI5R4	TCKI5R3	TCKI5R2	TCKI5R1	TCKI5R0
bit 7							bit 0

Legend:			
R = Readable bit	W = Writable bit	U = Unimplemented bit, read as ‘0’	
-n = Value at POR	‘1’ = Bit is set	‘0’ = Bit is cleared	x = Bit is unknown

bit 15-8 **ICM5R[7:0]:** Assign MCCP Capture 5 (ICM5) Input to the Corresponding RPn Pin bits
See Table 8-4.

bit 7-0 **TCKI5R[7:0]:** Assign MCCP Timer5 (TCKI5) Input to the Corresponding RPn Pin bits
See Table 8-4.

REGISTER 8-22: RPINR11: PERIPHERAL PIN SELECT INPUT REGISTER 11

R/W-0	R/W-0	R/W-0	R/W-0	R/W-0	R/W-0	R/W-0	R/W-0
OCFBR7	OCFBR6	OCFBR5	OCFBR4	OCFBR3	OCFBR2	OCFBR1	OCFBR0
bit 15							bit 8

R/W-0	R/W-0	R/W-0	R/W-0	R/W-0	R/W-0	R/W-0	R/W-0
OCFAR7	OCFAR6	OCFAR5	OCFAR4	OCFAR3	OCFAR2	OCFAR1	OCFAR0
bit 7							bit 0

Legend:			
R = Readable bit	W = Writable bit	U = Unimplemented bit, read as ‘0’	
-n = Value at POR	‘1’ = Bit is set	‘0’ = Bit is cleared	x = Bit is unknown

bit 15-8 **OCFBR[7:0]:** Assign xCCP Fault B (OCFB) Input to the Corresponding RPn Pin bits
See Table 8-4.

bit 7-0 **OCFAR[7:0]:** Assign xCCP Fault A (OCFA) Input to the Corresponding RPn Pin bits
See Table 8-4.

REGISTER 8-23: RPINR12: PERIPHERAL PIN SELECT INPUT REGISTER 12

R/W-0	R/W-0	R/W-0	R/W-0	R/W-0	R/W-0	R/W-0	R/W-0
PCI9R7	PCI9R6	PCI9R5	PCI9R4	PCI9R3	PCI9R2	PCI9R1	PCI9R0
bit 15							bit 8

R/W-0	R/W-0	R/W-0	R/W-0	R/W-0	R/W-0	R/W-0	R/W-0
PCI8R7	PCI8R6	PCI8R5	PCI8R4	PCI8R3	PCI8R2	PCI8R1	PCI8R0
bit 7							bit 0

Legend:			
R = Readable bit	W = Writable bit	U = Unimplemented bit, read as ‘0’	
-n = Value at POR	‘1’ = Bit is set	‘0’ = Bit is cleared	x = Bit is unknown

bit 15-8 **PCI9R[7:0]:** Assign PWM Input 9 (PCI9) to the Corresponding RPn Pin bits
See Table 8-4.

bit 7-0 **PCI8R[7:0]:** Assign PWM Input 8 (PCI8) to the Corresponding RPn Pin bits
See Table 8-4.

REGISTER 8-24: RPINR13: PERIPHERAL PIN SELECT INPUT REGISTER 13

R/W-0	R/W-0	R/W-0	R/W-0	R/W-0	R/W-0	R/W-0	R/W-0
PCI11R7	PCI11R6	PCI11R5	PCI11R4	PCI11R3	PCI11R2	PCI11R1	PCI11R0
bit 15							bit 8

R/W-0	R/W-0	R/W-0	R/W-0	R/W-0	R/W-0	R/W-0	R/W-0
PCI10R7	PCI10R6	PCI10R5	PCI10R4	PCI10R3	PCI10R2	PCI10R1	PCI10R0
bit 7							bit 0

Legend:			
R = Readable bit	W = Writable bit	U = Unimplemented bit, read as ‘0’	
-n = Value at POR	‘1’ = Bit is set	‘0’ = Bit is cleared	x = Bit is unknown

bit 15-8 **PCI11R[7:0]:** Assign PWM Input 11 (PCI11) to the Corresponding RPn Pin bits
See Table 8-4.

bit 7-0 **PCI10R[7:0]:** Assign PWM Input 10 (PCI10) to the Corresponding RPn Pin bits
See Table 8-4.

© 2018-2019 Microchip Technology Inc.

REGISTER 8-25: RPINR14: PERIPHERAL PIN SELECT INPUT REGISTER 14

R/W-0	R/W-0	R/W-0	R/W-0	R/W-0	R/W-0	R/W-0	R/W-0
QEIB1R7	QEIB1R6	QEIB1R5	QEIB1R4	QEIB1R3	QEIB1R2	QEIB1R1	QEIB1R0
bit 15							bit 8

R/W-0	R/W-0	R/W-0	R/W-0	R/W-0	R/W-0	R/W-0	R/W-0
QEIA1R7	QEIA1R6	QEIA1R5	QEIA1R4	QEIA1R3	QEIA1R2	QEIA1R1	QEIA1R0
bit 7							bit 0

Legend:			
R = Readable bit	W = Writable bit	U = Unimplemented bit, read as ‘0’	
-n = Value at POR	‘1’ = Bit is set	‘0’ = Bit is cleared	x = Bit is unknown

bit 15-8 **QEIB1R[7:0]:** Assign QEI1 Input B (QEIB1) to the Corresponding RPn Pin bits
See Table 8-4.

bit 7-0 **QEIA1R[7:0]:** Assign QEI1 Input A (QEIA1) to the Corresponding RPn Pin bits
See Table 8-4.

REGISTER 8-26: RPINR15: PERIPHERAL PIN SELECT INPUT REGISTER 15

R/W-0	R/W-0	R/W-0	R/W-0	R/W-0	R/W-0	R/W-0	R/W-0
QEIHOM1R7	QEIHOM1R6	QEIHOM1R5	QEIHOM1R4	QEIHOM1R3	QEIHOM1R2	QEIHOM1R1	QEIHOM1R0
bit 15							bit 8

R/W-0	R/W-0	R/W-0	R/W-0	R/W-0	R/W-0	R/W-0	R/W-0
QEINDX1R7	QEINDX1R6	QEINDX1R5	QEINDX1R4	QEINDX1R3	QEINDX1R2	QEINDX1R1	QEINDX1R0
bit 7							bit 0

Legend:			
R = Readable bit	W = Writable bit	U = Unimplemented bit, read as ‘0’	
-n = Value at POR	‘1’ = Bit is set	‘0’ = Bit is cleared	x = Bit is unknown

bit 15-8 **QEIHOM1R[7:0]:** Assign QEI1 Home 1 Input (QEIHOM1) to the Corresponding RPn Pin bits
See Table 8-4.

bit 7-0 **QEINDX1R[7:0]:** Assign QEI1 Index 1 Input (QEINDX1) to the Corresponding RPn Pin bits
See Table 8-4.

REGISTER 8-27: RPINR16: PERIPHERAL PIN SELECT INPUT REGISTER 16

R/W-0	R/W-0	R/W-0	R/W-0	R/W-0	R/W-0	R/W-0	R/W-0
QEIB2R7	QEIB2R6	QEIB2R5	QEIB2R4	QEIB2R3	QEIB2R2	QEIB2R1	QEIB2R0
bit 15							bit 8

R/W-0	R/W-0	R/W-0	R/W-0	R/W-0	R/W-0	R/W-0	R/W-0
QEIA2R7	QEIA2R6	QEIA2R5	QEIA2R4	QEIA2R3	QEIA2R2	QEIA2R1	QEIA2R0
bit 7							bit 0

Legend:			
R = Readable bit	W = Writable bit	U = Unimplemented bit, read as ‘0’	
-n = Value at POR	‘1’ = Bit is set	‘0’ = Bit is cleared	x = Bit is unknown

bit 15-8 **QEIB2R[7:0]:** Assign QEI2 Input B (QEIB2) to the Corresponding RPn Pin bits
See Table 8-4.

bit 7-0 **QEIA2R[7:0]:** Assign QEI2 Input A (QEIA2) to the Corresponding RPn Pin bits
See Table 8-4.

REGISTER 8-28: RPINR17: PERIPHERAL PIN SELECT INPUT REGISTER 17

R/W-0	R/W-0	R/W-0	R/W-0	R/W-0	R/W-0	R/W-0	R/W-0
QEIHOM2R7	QEIHOM2R6	QEIHOM2R5	QEIHOM2R4	QEIHOM2R3	QEIHOM2R2	QEIHOM2R1	QEIHOM2R0
bit 15							bit 8

R/W-0	R/W-0	R/W-0	R/W-0	R/W-0	R/W-0	R/W-0	R/W-0
QEINDX2R7	QEINDX2R6	QEINDX2R5	QEINDX2R4	QEINDX2R3	QEINDX2R2	QEINDX2R1	QEINDX2R0
bit 7							bit 0

Legend:			
R = Readable bit	W = Writable bit	U = Unimplemented bit, read as ‘0’	
-n = Value at POR	‘1’ = Bit is set	‘0’ = Bit is cleared	x = Bit is unknown

bit 15-8 **QEIHOM2R[7:0]:** Assign QEI2 Home 1 Input (QEIHOM2) to the Corresponding RPn Pin bits
See Table 8-4.

bit 7-0 **QEINDX2R[7:0]:** Assign QEI2 Index 1 Input (QEINDX2) to the Corresponding RPn Pin bits
See Table 8-4.

© 2018-2019 Microchip Technology Inc.

REGISTER 8-29: RPINR18: PERIPHERAL PIN SELECT INPUT REGISTER 18

R/W-0	R/W-0	R/W-0	R/W-0	R/W-0	R/W-0	R/W-0	R/W-0
U1DSRR7	U1DSRR6	U1DSRR5	U1DSRR4	U1DSRR3	U1DSRR2	U1DSRR1	U1DSRR0
bit 15							bit 8

R/W-0	R/W-0	R/W-0	R/W-0	R/W-0	R/W-0	R/W-0	R/W-0
U1RXR7	U1RXR6	U1RXR5	U1RXR4	U1RXR3	U1RXR2	U1RXR1	U1RXR0
bit 7							bit 0

Legend:			
R = Readable bit	W = Writable bit	U = Unimplemented bit, read as ‘0’	
-n = Value at POR	‘1’ = Bit is set	‘0’ = Bit is cleared	x = Bit is unknown

bit 15-8 **U1DSRR[7:0]:** Assign UART1 Data-Set-Ready ($\overline{\text{U1DSR}}$) to the Corresponding RPn Pin bits
See Table 8-4.

bit 7-0 **U1RXR[7:0]:** Assign UART1 Receive (U1RX) to the Corresponding RPn Pin bits
See Table 8-4.

REGISTER 8-30: RPINR19: PERIPHERAL PIN SELECT INPUT REGISTER 19

R/W-0	R/W-0	R/W-0	R/W-0	R/W-0	R/W-0	R/W-0	R/W-0
U2DSRR7	U2DSRR6	U2DSRR5	U2DSRR4	U2DSRR3	U2DSRR2	U2DSRR1	U2DSRR0
bit 15							bit 8

R/W-0	R/W-0	R/W-0	R/W-0	R/W-0	R/W-0	R/W-0	R/W-0
U2RXR7	U2RXR6	U2RXR5	U2RXR4	U2RXR3	U2RXR2	U2RXR1	U2RXR0
bit 7							bit 0

Legend:			
R = Readable bit	W = Writable bit	U = Unimplemented bit, read as ‘0’	
-n = Value at POR	‘1’ = Bit is set	‘0’ = Bit is cleared	x = Bit is unknown

bit 15-8 **U2DSRR[7:0]:** Assign UART2 Data-Set-Ready ($\overline{\text{U2DSR}}$) to the Corresponding RPn Pin bits
See Table 8-4.

bit 7-0 **U2RXR[7:0]:** Assign UART2 Receive (U2RX) to the Corresponding RPn Pin bits
See Table 8-4.

REGISTER 8-31: RPINR20: PERIPHERAL PIN SELECT INPUT REGISTER 20

R/W-0	R/W-0	R/W-0	R/W-0	R/W-0	R/W-0	R/W-0	R/W-0
SCK1R7	SCK1R6	SCK1R5	SCK1R4	SCK1R3	SCK1R2	SCK1R1	SCK1R0
bit 15							bit 8

R/W-0	R/W-0	R/W-0	R/W-0	R/W-0	R/W-0	R/W-0	R/W-0
SDI1R7	SDI1R6	SDI1R5	SDI1R4	SDI1R3	SDI1R2	SDI1R1	SDI1R0
bit 7							bit 0

Legend:			
R = Readable bit	W = Writable bit	U = Unimplemented bit, read as ‘0’	
-n = Value at POR	‘1’ = Bit is set	‘0’ = Bit is cleared	x = Bit is unknown

bit 15-8 **SCK1R[7:0]:** Assign SPI1 Clock Input (SCK1IN) to the Corresponding RPn Pin bits
See Table 8-4.

bit 7-0 **SDI1R[7:0]:** Assign SPI1 Data Input (SDI1) to the Corresponding RPn Pin bits
See Table 8-4.

REGISTER 8-32: RPINR21: PERIPHERAL PIN SELECT INPUT REGISTER 21

R/W-0	R/W-0	R/W-0	R/W-0	R/W-0	R/W-0	R/W-0	R/W-0
REFOIR7	REFOIR6	REFOIR5	REFOIR4	REFOIR3	REFOIR2	REFOIR1	REFOIR0
bit 15							bit 8

R/W-0	R/W-0	R/W-0	R/W-0	R/W-0	R/W-0	R/W-0	R/W-0
SS1R7	SS1R6	SS1R5	SS1R4	SS1R3	SS1R2	SS1R1	SS1R0
bit 7							bit 0

Legend:			
R = Readable bit	W = Writable bit	U = Unimplemented bit, read as ‘0’	
-n = Value at POR	‘1’ = Bit is set	‘0’ = Bit is cleared	x = Bit is unknown

bit 15-8 **REFOIR[7:0]:** Assign Reference Clock Input (REFCLKI) to the Corresponding RPn Pin bits
See Table 8-4.

bit 7-0 **SS1R[7:0]:** Assign SPI1 Slave Select ($\overline{SS1}$) to the Corresponding RPn Pin bits
See Table 8-4.

© 2018-2019 Microchip Technology Inc.

REGISTER 8-33: RPINR22: PERIPHERAL PIN SELECT INPUT REGISTER 22

R/W-0	R/W-0	R/W-0	R/W-0	R/W-0	R/W-0	R/W-0	R/W-0
SCK2R7	SCK2R6	SCK2R5	SCK2R4	SCK2R3	SCK2R2	SCK2R1	SCK2R0
bit 15							bit 8

R/W-0	R/W-0	R/W-0	R/W-0	R/W-0	R/W-0	R/W-0	R/W-0
SDI2R7	SDI2R6	SDI2R5	SDI2R4	SDI2R3	SDI2R2	SDI2R1	SDI2R0
bit 7							bit 0

Legend:			
R = Readable bit	W = Writable bit	U = Unimplemented bit, read as ‘0’	
-n = Value at POR	‘1’ = Bit is set	‘0’ = Bit is cleared	x = Bit is unknown

bit 15-8 **SCK2R[7:0]:** Assign SPI2 Clock Input (SCK2IN) to the Corresponding RPn Pin bits
See Table 8-4.

bit 7-0 **SDI2R[7:0]:** Assign SPI2 Data Input (SDI2) to the Corresponding RPn Pin bits
See Table 8-4.

REGISTER 8-34: RPINR23: PERIPHERAL PIN SELECT INPUT REGISTER 23

U-0	U-0	U-0	U-0	U-0	U-0	U-0	U-0
—	—	—	—	—	—	—	—
bit 15							bit 8

R/W-0	R/W-0	R/W-0	R/W-0	R/W-0	R/W-0	R/W-0	R/W-0
SS2R7	SS2R6	SS2R5	SS2R4	SS2R3	SS2R2	SS2R1	SS2R0
bit 7							bit 0

Legend:			
R = Readable bit	W = Writable bit	U = Unimplemented bit, read as ‘0’	
-n = Value at POR	‘1’ = Bit is set	‘0’ = Bit is cleared	x = Bit is unknown

bit 15-8 **Unimplemented:** Read as ‘0’

bit 7-0 **SS2R[7:0]:** Assign SPI2 Slave Select ($\overline{SS2}$) to the Corresponding RPn Pin bits
See Table 8-4.

REGISTER 8-35: RPINR27: PERIPHERAL PIN SELECT INPUT REGISTER 27

R/W-0	R/W-0	R/W-0	R/W-0	R/W-0	R/W-0	R/W-0	R/W-0
U3DSRR7	U3DSRR6	U3DSRR5	U3DSRR4	U3DSRR3	U3DSRR2	U3DSRR1	U3DSRR0
bit 15							bit 8

R/W-0	R/W-0	R/W-0	R/W-0	R/W-0	R/W-0	R/W-0	R/W-0
U3RXR7	U3RXR6	U3RXR5	U3RXR4	U3RXR3	U3RXR2	U3RXR1	U3RXR0
bit 7							bit 0

Legend:			
R = Readable bit	W = Writable bit	U = Unimplemented bit, read as ‘0’	
-n = Value at POR	‘1’ = Bit is set	‘0’ = Bit is cleared	x = Bit is unknown

bit 15-8 **U3DSRR[7:0]:** Assign UART3 Data-Set-Ready ($\overline{\text{U3DSR}}$) to the Corresponding RPn Pin bits
See Table 8-4.

bit 7-0 **U3RXR[7:0]:** Assign UART3 Receive (U3RX) to the Corresponding RPn Pin bits
See Table 8-4.

REGISTER 8-36: RPINR29: PERIPHERAL PIN SELECT INPUT REGISTER 29

R/W-0	R/W-0	R/W-0	R/W-0	R/W-0	R/W-0	R/W-0	R/W-0
SCK3R7	SCK3R6	SCK3R5	SCK3R4	SCK3R3	SCK3R2	SCK3R1	SCK3R0
bit 15							bit 8

R/W-0	R/W-0	R/W-0	R/W-0	R/W-0	R/W-0	R/W-0	R/W-0
SDI3R7	SDI3R6	SDI3R5	SDI3R4	SDI3R3	SDI3R2	SDI3R1	SDI3R0
bit 7							bit 0

Legend:			
R = Readable bit	W = Writable bit	U = Unimplemented bit, read as ‘0’	
-n = Value at POR	‘1’ = Bit is set	‘0’ = Bit is cleared	x = Bit is unknown

bit 15-8 **SCK3R[7:0]:** Assign SPI3 Clock Input (SCK3IN) to the Corresponding RPn Pin bits
See Table 8-4.

bit 7-0 **SDI3R[7:0]:** Assign SPI3 Data Input (SDI3) to the Corresponding RPn Pin bits
See Table 8-4.

© 2018-2019 Microchip Technology Inc.

REGISTER 8-37: RPINR30: PERIPHERAL PIN SELECT INPUT REGISTER 30

U-0	U-0	U-0	U-0	U-0	U-0	U-0	U-0
—	—	—	—	—	—	—	—
bit 15							bit 8

R/W-0	R/W-0	R/W-0	R/W-0	R/W-0	R/W-0	R/W-0	R/W-0
SS3R7	SS3R6	SS3R5	SS3R4	SS3R3	SS3R2	SS3R1	SS3R0
bit 7							bit 0

Legend:			
R = Readable bit	W = Writable bit	U = Unimplemented bit, read as ‘0’	
-n = Value at POR	‘1’ = Bit is set	‘0’ = Bit is cleared	x = Bit is unknown

bit 15-8 **Unimplemented:** Read as ‘0’

bit 7-0 **SS3R[7:0]:** Assign SPI3 Slave Select ($\overline{SS2}$) to the Corresponding RPn Pin bits
See Table 8-4.

REGISTER 8-38: RPINR37: PERIPHERAL PIN SELECT INPUT REGISTER 37

R/W-0	R/W-0	R/W-0	R/W-0	R/W-0	R/W-0	R/W-0	R/W-0
PCI17R7	PCI17R6	PCI17R5	PCI17R4	PCI17R3	PCI17R2	PCI17R1	PCI17R0
bit 15							bit 8

R/W-0	R/W-0	R/W-0	R/W-0	R/W-0	R/W-0	R/W-0	R/W-0
OCFCR7	OCFCR6	OCFCR5	OCFCR4	OCFCR3	OCFCR2	OCFCR1	OCFCR0
bit 7							bit 0

Legend:			
R = Readable bit	W = Writable bit	U = Unimplemented bit, read as ‘0’	
-n = Value at POR	‘1’ = Bit is set	‘0’ = Bit is cleared	x = Bit is unknown

bit 15-8 **PCI17R[7:0]:** Assign PWM Input 17 (PCI17) to the Corresponding RPn Pin bits
See Table 8-4.

bit 7-0 **OCFCR[7:0]:** Assign xCCP Fault C (OCFC) to the Corresponding RPn Pin bits
See Table 8-4.

REGISTER 8-39: RPINR38: PERIPHERAL PIN SELECT INPUT REGISTER 38

U-0	U-0	U-0	U-0	U-0	U-0	U-0	U-0
—	—	—	—	—	—	—	—
bit 15							bit 8

R/W-0	R/W-0	R/W-0	R/W-0	R/W-0	R/W-0	R/W-0	R/W-0
PCI18R7	PCI18R6	PCI18R5	PCI18R4	PCI18R3	PCI18R2	PCI18R1	PCI18R0
bit 7							bit 0

Legend:			
R = Readable bit	W = Writable bit	U = Unimplemented bit, read as ‘0’	
-n = Value at POR	‘1’ = Bit is set	‘0’ = Bit is cleared	x = Bit is unknown

bit 15-8 **Unimplemented:** Read as ‘0’

bit 7-0 **PCI18R[7:0]:** Assign PWM Input 18 (PCI18) to the Corresponding RPn Pin bits
See Table 8-4.

REGISTER 8-40: RPINR42: PERIPHERAL PIN SELECT INPUT REGISTER 42

R/W-0	R/W-0	R/W-0	R/W-0	R/W-0	R/W-0	R/W-0	R/W-0
PCI13R7	PCI13R6	PCI13R5	PCI13R4	PCI13R3	PCI13R2	PCI13R1	PCI13R0
bit 15							bit 8

R/W-0	R/W-0	R/W-0	R/W-0	R/W-0	R/W-0	R/W-0	R/W-0
PCI12R7	PCI12R6	PCI12R5	PCI12R4	PCI12R3	PCI12R2	PCI12R1	PCI12R0
bit 7							bit 0

Legend:			
R = Readable bit	W = Writable bit	U = Unimplemented bit, read as ‘0’	
-n = Value at POR	‘1’ = Bit is set	‘0’ = Bit is cleared	x = Bit is unknown

bit 15-8 **PCI13R[7:0]:** Assign PWM Input 13 (PCI13) to the Corresponding RPn Pin bits
See Table 8-4.

bit 7-0 **PCI12R[7:0]:** Assign PWM Input 12 (PCI12) to the Corresponding RPn Pin bits
See Table 8-4.

© 2018-2019 Microchip Technology Inc.

REGISTER 8-41: RPINR43: PERIPHERAL PIN SELECT INPUT REGISTER 43

R/W-0	R/W-0	R/W-0	R/W-0	R/W-0	R/W-0	R/W-0	R/W-0
PCI15R7	PCI15R6	PCI15R5	PCI15R4	PCI15R3	PCI15R2	PCI15R1	PCI15R0
bit 15							bit 8

R/W-0	R/W-0	R/W-0	R/W-0	R/W-0	R/W-0	R/W-0	R/W-0
PCI14R7	PCI14R6	PCI14R5	PCI14R4	PCI14R3	PCI14R2	PCI14R1	PCI14R0
bit 7							bit 0

Legend:			
R = Readable bit	W = Writable bit	U = Unimplemented bit, read as ‘0’	
-n = Value at POR	‘1’ = Bit is set	‘0’ = Bit is cleared	x = Bit is unknown

bit 15-8 **PCI15R[7:0]:** Assign PWM Input 15 (PCI15) to the Corresponding RPn Pin bits
See Table 8-4.

bit 7-0 **PCI14R[7:0]:** Assign PWM Input 14 (PCI14) to the Corresponding RPn Pin bits
See Table 8-4.

REGISTER 8-42: RPINR44: PERIPHERAL PIN SELECT INPUT REGISTER 44

R/W-0	R/W-0	R/W-0	R/W-0	R/W-0	R/W-0	R/W-0	R/W-0
SENT1R7	SENT1R6	SENT1R5	SENT1R4	SENT1R3	SENT1R2	SENT1R1	SENT1R0
bit 15							bit 8

R/W-0	R/W-0	R/W-0	R/W-0	R/W-0	R/W-0	R/W-0	R/W-0
PCI16R7	PCI16R6	PCI16R5	PCI16R4	PCI16R3	PCI16R2	PCI16R1	PCI16R0
bit 7							bit 0

Legend:			
R = Readable bit	W = Writable bit	U = Unimplemented bit, read as ‘0’	
-n = Value at POR	‘1’ = Bit is set	‘0’ = Bit is cleared	x = Bit is unknown

bit 15-8 **SENT1R[7:0]:** Assign SENT1 Input (SENT1) to the Corresponding RPn Pin bits
See Table 8-4.

bit 7-0 **PCI16[7:0]:** Assign PWM Input 16 (PCI16) to the Corresponding RPn Pin bits
See Table 8-4.

REGISTER 8-43: RPINR45: PERIPHERAL PIN SELECT INPUT REGISTER 45

R/W-0	R/W-0	R/W-0	R/W-0	R/W-0	R/W-0	R/W-0	R/W-0
CLCINAR7	CLCINAR6	CLCINAR5	CLCINAR4	CLCINAR3	CLCINAR2	CLCINAR1	CLCINAR0
bit 15							bit 8

R/W-0	R/W-0	R/W-0	R/W-0	R/W-0	R/W-0	R/W-0	R/W-0
SENT2R7	SENT2R6	SENT2R5	SENT2R4	SENT2R3	SENT2R2	SENT2R1	SENT2R0
bit 7							bit 0

Legend:			
R = Readable bit	W = Writable bit	U = Unimplemented bit, read as ‘0’	
-n = Value at POR	‘1’ = Bit is set	‘0’ = Bit is cleared	x = Bit is unknown

bit 15-8 **CLCINAR[7:0]:** Assign CLC Input A (CLCINA) to the Corresponding RPn Pin bits
See Table 8-4.

bit 7-0 **SENT2R[7:0]:** Assign SENT2 Input (SENT2) to the Corresponding RPn Pin bits
See Table 8-4.

REGISTER 8-44: RPINR46: PERIPHERAL PIN SELECT INPUT REGISTER 46

R/W-0	R/W-0	R/W-0	R/W-0	R/W-0	R/W-0	R/W-0	R/W-0
CLCINCR7	CLCINCR6	CLCINCR5	CLCINCR4	CLCINCR3	CLCINCR2	CLCINCR1	CLCINCR0
bit 15							bit 8

R/W-0	R/W-0	R/W-0	R/W-0	R/W-0	R/W-0	R/W-0	R/W-0
CLCINBR7	CLCINBR6	CLCINBR5	CLCINBR4	CLCINBR3	CLCINBR2	CLCINBR1	CLCINBR0
bit 7							bit 0

Legend:			
R = Readable bit	W = Writable bit	U = Unimplemented bit, read as ‘0’	
-n = Value at POR	‘1’ = Bit is set	‘0’ = Bit is cleared	x = Bit is unknown

bit 15-8 **CLCINCR[7:0]:** Assign CLC Input C (CLCINC) to the Corresponding RPn Pin bits
See Table 8-4.

bit 7-0 **CLCINBR[7:0]:** Assign CLC Input B (CLCINB) to the Corresponding RPn Pin bits
See Table 8-4.

© 2018-2019 Microchip Technology Inc.

REGISTER 8-45: RPINR47: PERIPHERAL PIN SELECT INPUT REGISTER 47

R/W-0	R/W-0	R/W-0	R/W-0	R/W-0	R/W-0	R/W-0	R/W-0
ADCTRGR7	ADCTRGR6	ADCTRGR5	ADCTRGR4	ADCTRGR3	ADCTRGR2	ADCTRGR1	ADCTRGR0
bit 15							bit 8

R/W-0	R/W-0	R/W-0	R/W-0	R/W-0	R/W-0	R/W-0	R/W-0
CLCINDR7	CLCINDR6	CLCINDR5	CLCINDR4	CLCINDR3	CLCINDR2	CLCINDR1	CLCINDR0
bit 7							bit 0

Legend:			
R = Readable bit	W = Writable bit	U = Unimplemented bit, read as ‘0’	
-n = Value at POR	‘1’ = Bit is set	‘0’ = Bit is cleared	x = Bit is unknown

bit 15-8 **ADCTRGR[7:0]:** Assign ADC Trigger Input (ADCTRG) to the Corresponding RPn Pin bits
See Table 8-4.

bit 7-0 **CLCINDR[7:0]:** Assign CLC Input D (CLCIND) to the Corresponding RPn Pin bits
See Table 8-4.

REGISTER 8-46: RPINR48: PERIPHERAL PIN SELECT INPUT REGISTER 48

R/W-0	R/W-0	R/W-0	R/W-0	R/W-0	R/W-0	R/W-0	R/W-0
U1CTSR7	U1CTSR6	U1CTSR5	U1CTSR4	U1CTSR3	U1CTSR2	U1CTSR1	U1CTSR0
bit 15							bit 8

R/W-0	R/W-0	R/W-0	R/W-0	R/W-0	R/W-0	R/W-0	R/W-0
OCFDR7	OCFDR6	OCFDR5	OCFDR4	OCFDR3	OCFDR2	OCFDR1	OCFDR0
bit 7							bit 0

Legend:			
R = Readable bit	W = Writable bit	U = Unimplemented bit, read as ‘0’	
-n = Value at POR	‘1’ = Bit is set	‘0’ = Bit is cleared	x = Bit is unknown

bit 15-8 **U1CTSR[7:0]:** Assign UART1 Clear-to-Send ($\overline{\text{U1CTS}}$) to the Corresponding RPn Pin bits
See Table 8-4.

bit 7-0 **OCFDR[7:0]:** Assign xCCP Fault D (OCFD) to the Corresponding RPn Pin bits
See Table 8-4.

REGISTER 8-47: RPINR49: PERIPHERAL PIN SELECT INPUT REGISTER 49

R/W-0	R/W-0	R/W-0	R/W-0	R/W-0	R/W-0	R/W-0	R/W-0
U3CTSR7	U3CTSR6	U3CTSR5	U3CTSR4	U3CTSR3	U3CTSR2	U3CTSR1	U3CTSR0
bit 15							bit 8

R/W-0	R/W-0	R/W-0	R/W-0	R/W-0	R/W-0	R/W-0	R/W-0
U2CTSR7	U2CTSR6	U2CTSR5	U2CTSR4	U2CTSR3	U2CTSR2	U2CTSR1	U2CTSR0
bit 7							bit 0

Legend:			
R = Readable bit	W = Writable bit	U = Unimplemented bit, read as ‘0’	
-n = Value at POR	‘1’ = Bit is set	‘0’ = Bit is cleared	x = Bit is unknown

bit 15-8 **U3CTSR[7:0]:** Assign UART3 Clear-to-Send ($\overline{\text{U3CTS}}$) to the Corresponding RPn Pin bits
See Table 8-4.

bit 7-0 **U2CTSR[7:0]:** Assign UART2 Clear-to-Send ($\overline{\text{U2CTS}}$) to the Corresponding RPn Pin bits
See Table 8-4.

© 2018-2019 Microchip Technology Inc.

REGISTER 8-48: RPOR0: PERIPHERAL PIN SELECT OUTPUT REGISTER 0

U-0	U-0	R/W-0	R/W-0	R/W-0	R/W-0	R/W-0	R/W-0
—	—	RP33R5	RP33R4	RP33R3	RP33R2	RP33R1	RP33R0
bit 15							bit 8

U-0	U-0	R/W-0	R/W-0	R/W-0	R/W-0	R/W-0	R/W-0
—	—	RP32R5	RP32R4	RP32R3	RP32R2	RP32R1	RP32R0
bit 7							bit 0

Legend:			
R = Readable bit	W = Writable bit	U = Unimplemented bit, read as ‘0’	
-n = Value at POR	‘1’ = Bit is set	‘0’ = Bit is cleared	x = Bit is unknown

bit 15-14 **Unimplemented:** Read as ‘0’

bit 13-8 **RP33R[5:0]:** Peripheral Output Function is Assigned to RP33 Output Pin bits (see Table 8-7 for peripheral function numbers)

bit 7-6 **Unimplemented:** Read as ‘0’

bit 5-0 **RP32R[5:0]:** Peripheral Output Function is Assigned to RP32 Output Pin bits (see Table 8-7 for peripheral function numbers)

REGISTER 8-49: RPOR1: PERIPHERAL PIN SELECT OUTPUT REGISTER 1

U-0	U-0	R/W-0	R/W-0	R/W-0	R/W-0	R/W-0	R/W-0
—	—	RP35R5	RP35R4	RP35R3	RP35R2	RP35R1	RP35R0
bit 15							bit 8

U-0	U-0	R/W-0	R/W-0	R/W-0	R/W-0	R/W-0	R/W-0
—	—	RP34R5	RP34R4	RP34R3	RP34R2	RP34R1	RP34R0
bit 7							bit 0

Legend:			
R = Readable bit	W = Writable bit	U = Unimplemented bit, read as ‘0’	
-n = Value at POR	‘1’ = Bit is set	‘0’ = Bit is cleared	x = Bit is unknown

bit 15-14 **Unimplemented:** Read as ‘0’

bit 13-8 **RP35R[5:0]:** Peripheral Output Function is Assigned to RP35 Output Pin bits (see Table 8-7 for peripheral function numbers)

bit 7-6 **Unimplemented:** Read as ‘0’

bit 5-0 **RP34R[5:0]:** Peripheral Output Function is Assigned to RP34 Output Pin bits (see Table 8-7 for peripheral function numbers)

REGISTER 8-50: RPOR2: PERIPHERAL PIN SELECT OUTPUT REGISTER 2

U-0	U-0	R/W-0	R/W-0	R/W-0	R/W-0	R/W-0	R/W-0
—	—	RP37R5	RP37R4	RP37R3	RP37R2	RP37R1	RP37R0
bit 15							bit 8

U-0	U-0	R/W-0	R/W-0	R/W-0	R/W-0	R/W-0	R/W-0
—	—	RP36R5	RP36R4	RP36R3	RP36R2	RP36R1	RP36R0
bit 7							bit 0

Legend:			
R = Readable bit	W = Writable bit	U = Unimplemented bit, read as ‘0’	
-n = Value at POR	‘1’ = Bit is set	‘0’ = Bit is cleared	x = Bit is unknown

bit 15-14 **Unimplemented:** Read as ‘0’

bit 13-8 **RP37R[5:0]:** Peripheral Output Function is Assigned to RP37 Output Pin bits (see Table 8-7 for peripheral function numbers)

bit 7-6 **Unimplemented:** Read as ‘0’

bit 5-0 **RP36R[5:0]:** Peripheral Output Function is Assigned to RP36 Output Pin bits (see Table 8-7 for peripheral function numbers)

REGISTER 8-51: RPOR3: PERIPHERAL PIN SELECT OUTPUT REGISTER 3

U-0	U-0	R/W-0	R/W-0	R/W-0	R/W-0	R/W-0	R/W-0
—	—	RP39R5	RP39R4	RP39R3	RP39R2	RP39R1	RP39R0
bit 15							bit 8

U-0	U-0	R/W-0	R/W-0	R/W-0	R/W-0	R/W-0	R/W-0
—	—	RP38R5	RP38R5	RP38R5	RP38R5	RP38R5	RP38R5
bit 7							bit 0

Legend:			
R = Readable bit	W = Writable bit	U = Unimplemented bit, read as ‘0’	
-n = Value at POR	‘1’ = Bit is set	‘0’ = Bit is cleared	x = Bit is unknown

bit 15-14 **Unimplemented:** Read as ‘0’

bit 13-8 **RP39R[5:0]:** Peripheral Output Function is Assigned to RP39 Output Pin bits (see Table 8-7 for peripheral function numbers)

bit 7-6 **Unimplemented:** Read as ‘0’

bit 5-0 **RP38R[5:0]:** Peripheral Output Function is Assigned to RP38 Output Pin bits (see Table 8-7 for peripheral function numbers)

© 2018-2019 Microchip Technology Inc.

REGISTER 8-52: RPOR4: PERIPHERAL PIN SELECT OUTPUT REGISTER 4

U-0	U-0	R/W-0	R/W-0	R/W-0	R/W-0	R/W-0	R/W-0
—	—	RP41R5	RP41R4	RP41R3	RP41R2	RP41R1	RP41R0
bit 15							bit 8

U-0	U-0	R/W-0	R/W-0	R/W-0	R/W-0	R/W-0	R/W-0
—	—	RP40R5	RP40R4	RP40R3	RP40R2	RP40R1	RP40R0
bit 7							bit 0

Legend:			
R = Readable bit	W = Writable bit	U = Unimplemented bit, read as ‘0’	
-n = Value at POR	‘1’ = Bit is set	‘0’ = Bit is cleared	x = Bit is unknown

bit 15-14 **Unimplemented:** Read as ‘0’

bit 13-8 **RP41R[5:0]:** Peripheral Output Function is Assigned to RP41 Output Pin bits (see Table 8-7 for peripheral function numbers)

bit 7-6 **Unimplemented:** Read as ‘0’

bit 5-0 **RP40R[5:0]:** Peripheral Output Function is Assigned to RP40 Output Pin bits (see Table 8-7 for peripheral function numbers)

REGISTER 8-53: RPOR5: PERIPHERAL PIN SELECT OUTPUT REGISTER 5

U-0	U-0	R/W-0	R/W-0	R/W-0	R/W-0	R/W-0	R/W-0
—	—	RP43R5	RP43R4	RP43R3	RP43R2	RP43R1	RP43R0
bit 15							bit 8

U-0	U-0	R/W-0	R/W-0	R/W-0	R/W-0	R/W-0	R/W-0
—	—	RP42R5	RP42R4	RP42R3	RP42R2	RP42R1	RP42R0
bit 7							bit 0

Legend:			
R = Readable bit	W = Writable bit	U = Unimplemented bit, read as ‘0’	
-n = Value at POR	‘1’ = Bit is set	‘0’ = Bit is cleared	x = Bit is unknown

bit 15-14 **Unimplemented:** Read as ‘0’

bit 13-8 **RP43R[5:0]:** Peripheral Output Function is Assigned to RP43 Output Pin bits (see Table 8-7 for peripheral function numbers)

bit 7-6 **Unimplemented:** Read as ‘0’

bit 5-0 **RP42R[5:0]:** Peripheral Output Function is Assigned to RP42 Output Pin bits (see Table 8-7 for peripheral function numbers)

REGISTER 8-54: RPOR6: PERIPHERAL PIN SELECT OUTPUT REGISTER 6

U-0	U-0	R/W-0	R/W-0	R/W-0	R/W-0	R/W-0	R/W-0
—	—	RP45R5	RP45R4	RP45R3	RP45R2	RP45R1	RP45R0
bit 15							bit 8

U-0	U-0	R/W-0	R/W-0	R/W-0	R/W-0	R/W-0	R/W-0
—	—	RP44R5	RP44R4	RP44R3	RP44R2	RP44R1	RP44R0
bit 7							bit 0

Legend:			
R = Readable bit	W = Writable bit	U = Unimplemented bit, read as ‘0’	
-n = Value at POR	‘1’ = Bit is set	‘0’ = Bit is cleared	x = Bit is unknown

bit 15-14 **Unimplemented:** Read as ‘0’

bit 13-8 **RP45R[5:0]:** Peripheral Output Function is Assigned to RP45 Output Pin bits (see Table 8-7 for peripheral function numbers)

bit 7-6 **Unimplemented:** Read as ‘0’

bit 5-0 **RP44R[5:0]:** Peripheral Output Function is Assigned to RP44 Output Pin bits (see Table 8-7 for peripheral function numbers)

REGISTER 8-55: RPOR7: PERIPHERAL PIN SELECT OUTPUT REGISTER 7

U-0	U-0	R/W-0	R/W-0	R/W-0	R/W-0	R/W-0	R/W-0
—	—	RP47R5	RP47R4	RP47R3	RP47R2	RP47R1	RP47R0
bit 15							bit 8

U-0	U-0	R/W-0	R/W-0	R/W-0	R/W-0	R/W-0	R/W-0
—	—	RP46R5	RP46R4	RP46R3	RP46R2	RP46R1	RP46R0
bit 7							bit 0

Legend:			
R = Readable bit	W = Writable bit	U = Unimplemented bit, read as ‘0’	
-n = Value at POR	‘1’ = Bit is set	‘0’ = Bit is cleared	x = Bit is unknown

bit 15-14 **Unimplemented:** Read as ‘0’

bit 13-8 **RP47R[5:0]:** Peripheral Output Function is Assigned to RP47 Output Pin bits (see Table 8-7 for peripheral function numbers)

bit 7-6 **Unimplemented:** Read as ‘0’

bit 5-0 **RP46R[5:0]:** Peripheral Output Function is Assigned to RP46 Output Pin bits (see Table 8-7 for peripheral function numbers)

© 2018-2019 Microchip Technology Inc.

REGISTER 8-56: RPOR8: PERIPHERAL PIN SELECT OUTPUT REGISTER 8

U-0	U-0	R/W-0	R/W-0	R/W-0	R/W-0	R/W-0	R/W-0
—	—	RP49R5	RP49R4	RP49R3	RP49R2	RP49R1	RP49R0
bit 15							bit 8

U-0	U-0	R/W-0	R/W-0	R/W-0	R/W-0	R/W-0	R/W-0
—	—	RP48R5	RP48R4	RP48R3	RP48R2	RP48R1	RP48R0
bit 7							bit 0

Legend:			
R = Readable bit	W = Writable bit	U = Unimplemented bit, read as ‘0’	
-n = Value at POR	‘1’ = Bit is set	‘0’ = Bit is cleared	x = Bit is unknown

bit 15-14 **Unimplemented:** Read as ‘0’

bit 13-8 **RP49R[5:0]:** Peripheral Output Function is Assigned to RP49 Output Pin bits (see Table 8-7 for peripheral function numbers)

bit 7-6 **Unimplemented:** Read as ‘0’

bit 5-0 **RP48R[5:0]:** Peripheral Output Function is Assigned to RP48 Output Pin bits (see Table 8-7 for peripheral function numbers)

REGISTER 8-57: RPOR9: PERIPHERAL PIN SELECT OUTPUT REGISTER 9

U-0	U-0	R/W-0	R/W-0	R/W-0	R/W-0	R/W-0	R/W-0
—	—	RP51R5	RP51R4	RP51R3	RP51R2	RP51R1	RP51R0
bit 15							bit 8

U-0	U-0	R/W-0	R/W-0	R/W-0	R/W-0	R/W-0	R/W-0
—	—	RP50R5	RP50R4	RP50R3	RP50R2	RP50R1	RP50R0
bit 7							bit 0

Legend:			
R = Readable bit	W = Writable bit	U = Unimplemented bit, read as ‘0’	
-n = Value at POR	‘1’ = Bit is set	‘0’ = Bit is cleared	x = Bit is unknown

bit 15-14 **Unimplemented:** Read as ‘0’

bit 13-8 **RP51R[5:0]:** Peripheral Output Function is Assigned to RP51 Output Pin bits (see Table 8-7 for peripheral function numbers)

bit 7-6 **Unimplemented:** Read as ‘0’

bit 5-0 **RP50R[5:0]:** Peripheral Output Function is Assigned to RP50 Output Pin bits (see Table 8-7 for peripheral function numbers)

REGISTER 8-58: RPOR10: PERIPHERAL PIN SELECT OUTPUT REGISTER 10

U-0	U-0	R/W-0	R/W-0	R/W-0	R/W-0	R/W-0	R/W-0
—	—	RP53R5	RP53R4	RP53R3	RP53R2	RP53R1	RP53R0
bit 15							bit 8

U-0	U-0	R/W-0	R/W-0	R/W-0	R/W-0	R/W-0	R/W-0
—	—	RP52R5	RP52R4	RP52R3	RP52R2	RP52R1	RP52R0
bit 7							bit 0

Legend:			
R = Readable bit	W = Writable bit	U = Unimplemented bit, read as ‘0’	
-n = Value at POR	‘1’ = Bit is set	‘0’ = Bit is cleared	x = Bit is unknown

bit 15-14 **Unimplemented:** Read as ‘0’

bit 13-8 **RP53[5:0]:** Peripheral Output Function is Assigned to RP53 Output Pin bits (see Table 8-7 for peripheral function numbers)

bit 7-6 **Unimplemented:** Read as ‘0’

bit 5-0 **RP52R[5:0]:** Peripheral Output Function is Assigned to RP52 Output Pin bits (see Table 8-7 for peripheral function numbers)

REGISTER 8-59: RPOR11: PERIPHERAL PIN SELECT OUTPUT REGISTER 11

U-0	U-0	R/W-0	R/W-0	R/W-0	R/W-0	R/W-0	R/W-0
—	—	RP55R5	RP55R4	RP55R3	RP55R2	RP55R1	RP55R0
bit 15							bit 8

U-0	U-0	R/W-0	R/W-0	R/W-0	R/W-0	R/W-0	R/W-0
—	—	RP54R5	RP54R4	RP54R3	RP54R2	RP54R1	RP54R0
bit 7							bit 0

Legend:			
R = Readable bit	W = Writable bit	U = Unimplemented bit, read as ‘0’	
-n = Value at POR	‘1’ = Bit is set	‘0’ = Bit is cleared	x = Bit is unknown

bit 15-14 **Unimplemented:** Read as ‘0’

bit 13-8 **RP55R[5:0]:** Peripheral Output Function is Assigned to RP55 Output Pin bits (see Table 8-7 for peripheral function numbers)

bit 7-6 **Unimplemented:** Read as ‘0’

bit 5-0 **RP54R[5:0]:** Peripheral Output Function is Assigned to RP54 Output Pin bits (see Table 8-7 for peripheral function numbers)

© 2018-2019 Microchip Technology Inc.

REGISTER 8-60: RPOR12: PERIPHERAL PIN SELECT OUTPUT REGISTER 12

U-0	U-0	R/W-0	R/W-0	R/W-0	R/W-0	R/W-0	R/W-0
—	—	RP57R5	RP57R4	RP57R3	RP57R2	RP57R1	RP57R0
bit 15							bit 8

U-0	U-0	R/W-0	R/W-0	R/W-0	R/W-0	R/W-0	R/W-0
—	—	RP56R5	RP56R4	RP56R3	RP56R2	RP56R1	RP56R0
bit 7							bit 0

Legend:			
R = Readable bit	W = Writable bit	U = Unimplemented bit, read as ‘0’	
-n = Value at POR	‘1’ = Bit is set	‘0’ = Bit is cleared	x = Bit is unknown

bit 15-14 **Unimplemented:** Read as ‘0’

bit 13-8 **RP57R[5:0]:** Peripheral Output Function is Assigned to RP57 Output Pin bits (see Table 8-7 for peripheral function numbers)

bit 7-6 **Unimplemented:** Read as ‘0’

bit 5-0 **RP56R[5:0]:** Peripheral Output Function is Assigned to RP56 Output Pin bits (see Table 8-7 for peripheral function numbers)

REGISTER 8-61: RPOR13: PERIPHERAL PIN SELECT OUTPUT REGISTER 13

U-0	U-0	R/W-0	R/W-0	R/W-0	R/W-0	R/W-0	R/W-0
—	—	RP59R5	RP59R4	RP59R3	RP59R2	RP59R1	RP59R0
bit 15							bit 8

U-0	U-0	R/W-0	R/W-0	R/W-0	R/W-0	R/W-0	R/W-0
—	—	RP58R5	RP58R4	RP58R3	RP58R2	RP58R1	RP58R0
bit 7							bit 0

Legend:			
R = Readable bit	W = Writable bit	U = Unimplemented bit, read as ‘0’	
-n = Value at POR	‘1’ = Bit is set	‘0’ = Bit is cleared	x = Bit is unknown

bit 15-14 **Unimplemented:** Read as ‘0’

bit 13-8 **RP59R[5:0]:** Peripheral Output Function is Assigned to RP59 Output Pin bits (see Table 8-7 for peripheral function numbers)

bit 7-6 **Unimplemented:** Read as ‘0’

bit 5-0 **RP58R[5:0]:** Peripheral Output Function is Assigned to RP58 Output Pin bits (see Table 8-7 for peripheral function numbers)

REGISTER 8-62: RPOR14: PERIPHERAL PIN SELECT OUTPUT REGISTER 14

U-0	U-0	R/W-0	R/W-0	R/W-0	R/W-0	R/W-0	R/W-0
—	—	RP61R5	RP61R4	RP61R3	RP61R2	RP61R1	RP61R0
bit 15							bit 8

U-0	U-0	R/W-0	R/W-0	R/W-0	R/W-0	R/W-0	R/W-0
—	—	RP60R5	RP60R4	RP60R3	RP60R2	RP60R1	RP60R0
bit 7							bit 0

Legend:			
R = Readable bit	W = Writable bit	U = Unimplemented bit, read as ‘0’	
-n = Value at POR	‘1’ = Bit is set	‘0’ = Bit is cleared	x = Bit is unknown

bit 15-14 **Unimplemented:** Read as ‘0’

bit 13-8 **RP61R[5:0]:** Peripheral Output Function is Assigned to RP61 Output Pin bits (see Table 8-7 for peripheral function numbers)

bit 7-6 **Unimplemented:** Read as ‘0’

bit 5-0 **RP60R[5:0]:** Peripheral Output Function is Assigned to RP60 Output Pin bits (see Table 8-7 for peripheral function numbers)

REGISTER 8-63: RPOR15: PERIPHERAL PIN SELECT OUTPUT REGISTER 15

U-0	U-0	R/W-0	R/W-0	R/W-0	R/W-0	R/W-0	R/W-0
—	—	RP72R5	RP72R4	RP72R3	RP72R2	RP72R1	RP72R0
bit 15							bit 8

U-0	U-0	R/W-0	R/W-0	R/W-0	R/W-0	R/W-0	R/W-0
—	—	RP65R5	RP65R4	RP65R3	RP65R2	RP65R1	RP65R0
bit 7							bit 0

Legend:			
R = Readable bit	W = Writable bit	U = Unimplemented bit, read as ‘0’	
-n = Value at POR	‘1’ = Bit is set	‘0’ = Bit is cleared	x = Bit is unknown

bit 15-14 **Unimplemented:** Read as ‘0’

bit 13-8 **RP72R[5:0]:** Peripheral Output Function is Assigned to RP72 Output Pin bits (see Table 8-7 for peripheral function numbers)

bit 7-6 **Unimplemented:** Read as ‘0’

bit 5-0 **RP65R[5:0]:** Peripheral Output Function is Assigned to RP65 Output Pin bits (see Table 8-7 for peripheral function numbers)

© 2018-2019 Microchip Technology Inc.

REGISTER 8-64: RPOR16: PERIPHERAL PIN SELECT OUTPUT REGISTER 16

U-0	U-0	R/W-0	R/W-0	R/W-0	R/W-0	R/W-0	R/W-0
—	—	RP77R5	RP77R4	RP77R3	RP77R2	RP77R1	RP77R0
bit 15							bit 8

U-0	U-0	R/W-0	R/W-0	R/W-0	R/W-0	R/W-0	R/W-0
—	—	RP74R5	RP74R4	RP74R3	RP74R2	RP74R1	RP74R0
bit 7							bit 0

Legend:			
R = Readable bit	W = Writable bit	U = Unimplemented bit, read as ‘0’	
-n = Value at POR	‘1’ = Bit is set	‘0’ = Bit is cleared	x = Bit is unknown

bit 15-14 **Unimplemented:** Read as ‘0’

bit 13-8 **RP77R[5:0]:** Peripheral Output Function is Assigned to RP77 Output Pin bits (see Table 8-7 for peripheral function numbers)

bit 7-6 **Unimplemented:** Read as ‘0’

bit 5-0 **RP74R[5:0]:** Peripheral Output Function is Assigned to RP74 Output Pin bits (see Table 8-7 for peripheral function numbers)

REGISTER 8-65: RPOR17: PERIPHERAL PIN SELECT OUTPUT REGISTER 17

U-0	U-0	R/W-0	R/W-0	R/W-0	R/W-0	R/W-0	R/W-0
—	—	RP177R5(1)	RP177R4(1)	RP177R3(1)	RP177R2(1)	RP177R1(1)	RP177R0(1)
bit 15							bit 8

U-0	U-0	R/W-0	R/W-0	R/W-0	R/W-0	R/W-0	R/W-0
—	—	RP176R5(1)	RP176R4(1)	RP176R3(1)	RP176R2(1)	RP176R1(1)	RP176R0(1)
bit 7							bit 0

Legend:			
R = Readable bit	W = Writable bit	U = Unimplemented bit, read as ‘0’	
-n = Value at POR	‘1’ = Bit is set	‘0’ = Bit is cleared	x = Bit is unknown

bit 15-14 **Unimplemented:** Read as ‘0’

bit 13-8 **RP177R[5:0]:** Peripheral Output Function is Assigned to RP177 Output Pin bits(1) (see Table 8-7 for peripheral function numbers)

bit 7-6 **Unimplemented:** Read as ‘0’

bit 5-0 **RP176R[5:0]:** Peripheral Output Function is Assigned to RP176 Output Pin bits(1) (see Table 8-7 for peripheral function numbers)

Note 1: These are virtual output ports.

REGISTER 8-66: RPOR18: PERIPHERAL PIN SELECT OUTPUT REGISTER 18

U-0	U-0	R/W-0	R/W-0	R/W-0	R/W-0	R/W-0	R/W-0
—	—	RP179R5(1)	RP179R4(1)	RP179R3(1)	RP179R2(1)	RP179R1(1)	RP179R0(1)
bit 15							bit 8

U-0	U-0	R/W-0	R/W-0	R/W-0	R/W-0	R/W-0	R/W-0
—	—	RP178R5(1)	RP178R4(1)	RP178R3(1)	RP178R2(1)	RP178R1(1)	RP178R0(1)
bit 7							bit 0

Legend:			
R = Readable bit	W = Writable bit	U = Unimplemented bit, read as ‘0’	
-n = Value at POR	‘1’ = Bit is set	‘0’ = Bit is cleared	x = Bit is unknown

bit 15-14 **Unimplemented:** Read as ‘0’

bit 13-8 **RP179R[5:0]:** Peripheral Output Function is Assigned to RP179 Output Pin bits(1)
(see Table 8-7 for peripheral function numbers)

bit 7-6 **Unimplemented:** Read as ‘0’

bit 5-0 **RP178R[5:0]:** Peripheral Output Function is Assigned to RP178 Output Pin bits(1)
(see Table 8-7 for peripheral function numbers)

Note 1: These are virtual output ports.

REGISTER 8-67: RPOR19: PERIPHERAL PIN SELECT OUTPUT REGISTER 19

U-0	U-0	R/W-0	R/W-0	R/W-0	R/W-0	R/W-0	R/W-0
—	—	RP181R5(1)	RP181R4(1)	RP181R3(1)	RP181R2(1)	RP181R1(1)	RP181R0(1)
bit 15							bit 8

U-0	U-0	R/W-0	R/W-0	R/W-0	R/W-0	R/W-0	R/W-0
—	—	RP180R5(1)	RP180R4(1)	RP180R3(1)	RP180R2(1)	RP180R1(1)	RP180R0(1)
bit 7							bit 0

Legend:			
R = Readable bit	W = Writable bit	U = Unimplemented bit, read as ‘0’	
-n = Value at POR	‘1’ = Bit is set	‘0’ = Bit is cleared	x = Bit is unknown

bit 15-14 **Unimplemented:** Read as ‘0’

bit 13-8 **RP181R[5:0]:** Peripheral Output Function is Assigned to RP181 Output Pin bits
(see Table 8-7 for peripheral function numbers)

bit 7-6 **Unimplemented:** Read as ‘0’

bit 5-0 **RP180R[5:0]:** Peripheral Output Function is Assigned to RP180 Output Pin bits
(see Table 8-7 for peripheral function numbers)

Note 1: These are virtual output ports.

© 2018-2019 Microchip Technology Inc.

TABLE 8-12: PPS INPUT CONTROL REGISTERS

Register	Bit 15	Bit 14	Bit 13	Bit 12	Bit 11	Bit 10	Bit 9	Bit 8	Bit 7	Bit 6	Bit 5	Bit 4	Bit 3	Bit 2	Bit 1	Bit 0
RPCON	—	—	—	—	IOLOCK	—	—	—	—	—	—	—	—	—	—	—
RPINR0	INT1R7	INT1R6	INT1R5	INT1R4	INT1R3	INT1R2	INT1R1	INT1R0	—	—	—	—	—	—	—	—
RPINR1	INT3R7	INT3R6	INT3R5	INT3R4	INT3R3	INT3R2	INT3R1	INT3R0	INT2R7	INT2R6	INT2R5	INT2R4	INT2R3	INT2R2	INT2R1	INT2R0
RPINR2	T1CKR7	T1CKR6	T1CKR5	T1CKR4	T1CKR3	T1CKR2	T1CKR1	T1CKR0	—	—	—	—	—	—	—	—
RPINR3	ICM1R7	ICM1R6	ICM1R5	ICM1R4	ICM1R3	ICM1R2	ICM1R1	ICM1R0	TCKI1R7	TCKI1R6	TCKI1R5	TCKI1R4	TCKI1R3	TCKI1R2	TCKI1R1	TCKI1R0
RPINR4	ICM2R7	ICM2R6	ICM2R5	ICM2R4	ICM2R3	ICM2R2	ICM2R1	ICM2R0	TCKI2R7	TCKI2R6	TCKI2R5	TCKI2R4	TCKI2R3	TCKI2R2	TCKI2R1	TCKI2R0
RPINR5	ICM3R7	ICM3R6	ICM3R5	ICM3R4	ICM3R3	ICM3R2	ICM3R1	ICM3R0	TCKI3R7	TCKI3R6	TCKI3R5	TCKI3R4	TCKI3R3	TCKI3R2	TCKI3R1	TCKI3R0
RPINR6	ICM4R7	ICM4R6	ICM4R5	ICM4R4	ICM4R3	ICM4R2	ICM4R1	ICM4R0	TCKI4R7	TCKI4R	TCKI4R5	TCKI4R4	TCKI4R3	TCKI4R2	TCKI4R1	TCKI4R0
RPINR7	ICM5R7	ICM5R6	ICM5R5	ICM5R4	ICM5R3	ICM5R2	ICM5R1	ICM5R0	TCKI5R7	TCKI5R6	TCKI5R5	TCKI5R4	TCKI5R3	TCKI5R2	TCKI5R1	TCKI5R0
RPINR11	OCFBR7	OCFBR6	OCFBR5	OCFBR4	OCFBR3	OCFBR2	OCFBR1	OCFBR0	OCFAR7	OCFAR6	OCFAR5	OCFAR4	OCFAR3	OCFAR2	OCFAR1	OCFAR0
RPINR12	PCI9R7	PCI9R6	PCI9R5	PCI9R4	PCI9R3	PCI9R2	PCI9R1	PCI9R0	PCI8R7	PCI8R6	PCI8R5	PCI8R4	PCI8R3	PCI8R2	PCI8R1	PCI8R0
RPINR13	PCI11R7	PCI11R6	PCI11R5	PCI11R4	PCI11R3	PCI11R2	PCI11R1	PCI11R0	PCI10R7	PCI10R6	PCI10R5	PCI10R4	PCI10R3	PCI10R2	PCI10R1	PCI10R0
RPINR14	QEIB1R7	QEIB1R6	QEIB1R5	QEIB1R4	QEIB1R3	QEIB1R2	QEIB1R1	QEIB1R0	QEIA1R7	QEIA1R6	QEIA1R5	QEIA1R4	QEIA1R3	QEIA1R2	QEIA1R1	QEIA1R0
RPINR15	QEIHOM1R7	QEIHOM1R6	QEIHOM1R5	QEIHOM1R4	QEIHOM1R3	QEIHOM1R2	QEIHOM1R1	QEIHOM1R0	QEINDX1R7	QEINDX1R6	QEINDX1R5	QEINDX1R4	QEINDX1R3	QEINDX1R2	QEINDX1R1	QEINDX1R0
RPINR16	QEIB2R7	QEIB2R6	QEIB2R5	QEIB2R4	QEIB2R3	QEIB2R2	QEIB2R1	QEIB2R0	QEIA2R7	QEIA2R6	QEIA2R5	QEIA2R4	QEIA2R3	QEIA2R2	QEIA2R1	QEIA2R0
RPINR17	QEIHOM2R7	QEIHOM2R6	QEIHOM2R5	QEIHOM2R4	QEIHOM2R3	QEIHOM2R2	QEIHOM2R1	QEIHOM2R0	QEINDX2R7	QEINDX2R6	QEINDX2R5	QEINDX2R4	QEINDX2R3	QEINDX2R2	QEINDX2R1	QEINDX2R0
RPINR18	U1DSRR7	U1DSRR6	U1DSRR5	U1DSRR4	U1DSRR3	U1DSRR2	U1DSRR1	U1DSRR0	U1RXR7	U1RXR6	U1RXR5	U1RXR4	U1RXR3	U1RXR2	U1RXR1	U1RXR0
RPINR19	U2DSRR7	U2DSRR6	U2DSRR5	U2DSRR4	U2DSRR3	U2DSRR2	U2DSRR1	U2DSRR0	U2RXR7	U2RXR6	U2RXR5	U2RXR4	U2RXR3	U2RXR2	U2RXR1	U2RXR0
RPINR20	SCK1R7	SCK1R6	SCK1R5	SCK1R4	SCK1R3	SCK1R2	SCK1R1	SCK1R0	SDI1R7	SDI1R6	SDI1R5	SDI1R4	SDI1R3	SDI1R2	SDI1R1	SDI1R0
RPINR21	REFOIR7	REFOIR6	REFOIR5	REFOIR4	REFOIR3	REFOIR2	REFOIR1	REFOIR0	SS1R7	SS1R6	SS1R5	SS1R4	SS1R3	SS1R2	SS1R1	SS1R0
RPINR22	SCK2R7	SCK2R6	SCK2R5	SCK2R4	SCK2R3	SCK2R2	SCK2R1	SCK2R0	SDI2R7	SDI2R6	SDI2R5	SDI2R4	SDI2R3	SDI2R2	SDI2R1	SDI2R0
RPINR23	—	—	—	—	—	—	—	—	SS2R7	SS2R6	SS2R5	SS2R4	SS2R3	SS2R2	SS2R1	SS2R0
RPINR27	U3DSRR7	U3DSRR6	U3DSRR5	U3DSRR4	U3DSRR3	U3DSRR2	U3DSRR1	U3DSRR0	U3RXR7	U3RXR6	U3RXR5	U3RXR4	U3RXR3	U3RXR2	U3RXR1	U3RXR0
RPINR29	SCK3R7	SCK3R6	SCK3R5	SCK3R4	SCK3R3	SCK3R2	SCK3R1	SCK3R0	SDI3R7	SDI3R6	SDI3R5	SDI3R4	SDI3R3	SDI3R2	SDI3R1	SDI3R0
RPINR30	—	—	—	—	—	—	—	—	SS3R7	SS3R6	SS3R5	SS3R4	SS3R3	SS3R2	SS3R1	SS3R0
RPINR37	PCI17R7	PCI17R6	PCI17R5	PCI17R4	PCI17R3	PCI17R2	PCI17R1	PCI17R0	OCFCR7	OCFCR6	OCFCR5	OCFCR4	OCFCR3	OCFCR2	OCFCR1	OCFCR0
RPINR38	—	—	—	—	—	—	—	—	PCI18R7	PCI18R6	PCI18R5	PCI18R4	PCI18R3	PCI18R2	PCI18R1	PCI18R0
RPINR42	PCI13R7	PCI13R6	PCI13R5	PCI13R4	PCI13R3	PCI13R2	PCI13R1	PCI13R0	PCI12R7	PCI12R6	PCI12R5	PCI12R4	PCI12R3	PCI12R2	PCI12R1	PCI12R0
RPINR43	PCI15R7	PCI15R6	PCI15R5	PCI15R4	PCI15R3	PCI15R2	PCI15R1	PCI15R0	PCI14R7	PCI14R6	PCI14R5	PCI14R4	PCI14R3	PCI14R2	PCI14R1	PCI14R0
RPINR44	SENT1R7	SENT1R6	SENT1R5	SENT1R4	SENT1R3	SENT1R2	SENT1R1	SENT1R0	PCI16R7	PCI16R6	PCI16R5	PCI16R4	PCI16R3	PCI16R2	PCI16R1	PCI16R0
RPINR45	CLCINAR7	CLCINAR6	CLCINAR5	CLCINAR4	CLCINAR3	CLCINAR2	CLCINAR1	CLCINAR0	SENT2R7	SENT2R6	SENT2R5	SENT2R4	SENT2R3	SENT2R2	SENT2R1	SENT2R0
RPINR46	CLCINCR7	CLCINCR6	CLCINCR5	CLCINCR4	CLCINCR3	CLCINCR2	CLCINCR1	CLCINCR0	CLCINBR7	CLCINBR6	CLCINBR5	CLCINBR4	CLCINBR3	CLCINBR2	CLCINBR1	CLCINBR0
RPINR47	ADCTRGR7	ADCTRGR6	ADCTRGR5	ADCTRGR4	ADCTRGR3	ADCTRGR2	ADCTRGR1	ADCTRGR0	CLCINDR7	CLCINDR6	CLCINDR5	CLCINDR4	CLCINDR3	CLCINDR2	CLCINDR1	CLCINDR0
RPINR48	U1CTSR7	U1CTSR6	U1CTSR5	U1CTSR4	U1CTSR3	U1CTSR2	U1CTSR1	U1CTSR0	OCFDR7	OCFDR6	OCFDR5	OCFDR4	OCFDR3	OCFDR2	OCFDR1	OCFDR0
RPINR49	U3CTSR7	U3CTSR6	U3CTSR5	U3CTSR4	U3CTSR3	U3CTSR2	U3CTSR1	U3CTSR0	U2CTSR7	U2CTSR6	U2CTSR5	U2CTSR4	U2CTSR3	U2CTSR2	U2CTSR1	U2CTSR0

© 2018-2019 Microchip Technology Inc.

TABLE 8-13: PPS OUTPUT CONTROL REGISTERS

Register	Bit 15	Bit 14	Bit 13	Bit 12	Bit 11	Bit 10	Bit 9	Bit 8	Bit 7	Bit 6	Bit 5	Bit 4	Bit 3	Bit 2	Bit 1	Bit 0
RPOR0	—	—	RP33R5	RP33R4	RP33R3	RP33R2	RP33R1	RP33R0	—	—	RP32R5	RP32R4	RP32R3	RP32R2	RP32R1	RP32R0
RPOR1	—	—	RP35R5	RP35R4	RP35R3	RP35R2	RP35R1	RP35R0	—	—	RP34R5	RP34R4	RP34R3	RP34R2	RP34R1	RP34R0
RPOR2	—	—	RP37R5	RP37R4	RP37R3	RP37R2	RP37R1	RP37R0	—	—	RP36R5	RP36R4	RP36R3	RP36R2	RP36R1	RP36R0
RPOR3	—	—	RP39R5	RP39R4	RP39R3	RP39R2	RP39R1	RP39R0	—	—	RP38R5	RP38R4	RP38R3	RP38R2	RP38R1	RP38R0
RPOR4	—	—	RP41R5	RP41R4	RP41R3	RP41R2	RP41R1	RP41R0	—	—	RP40R5	RP40R4	RP40R3	RP40R2	RP40R1	RP40R0
RPOR5	—	—	RP43R5	RP43R4	RP43R3	RP43R2	RP43R1	RP43R0	—	—	RP42R5	RP42R4	RP42R3	RP42R2	RP42R1	RP42R0
RPOR6	—	—	RP45R5	RP45R4	RP45R3	RP45R2	RP45R1	RP45R0	—	—	RP44R5	RP44R4	RP44R3	RP44R2	RP44R1	RP44R0
RPOR7	—	—	RP47R5	RP47R4	RP47R3	RP47R2	RP47R1	RP47R0	—	—	RP46R5	RP46R4	RP46R3	RP46R2	RP46R1	RP46R0
RPOR8	—	—	RP49R5	RP49R4	RP49R3	RP49R2	RP49R1	RP49R0	—	—	RP48R5	RP48R4	RP48R3	RP48R2	RP48R1	RP48R0
RPOR9	—	—	RP51R5	RP51R4	RP51R3	RP51R2	RP51R1	RP51R0	—	—	RP50R5	RP50R4	RP50R3	RP50R2	RP50R1	RP50R0
RPOR10	—	—	RP53R5	RP53R4	RP53R3	RP53R2	RP53R1	RP53R0	—	—	RP52R5	RP52R4	RP52R3	RP52R2	RP52R1	RP52R0
RPOR11	—	—	RP55R5	RP55R4	RP55R3	RP55R2	RP55R1	RP55R0	—	—	RP54R5	RP54R4	RP54R3	RP54R2	RP54R1	RP54R0
RPOR12	—	—	RP57R5	RP57R4	RP57R3	RP57R2	RP57R1	RP57R0	—	—	RP56R5	RP56R4	RP56R3	RP56R2	RP56R1	RP56R0
RPOR13	—	—	RP59R5	RP59R4	RP59R3	RP59R2	RP59R1	RP59R0	—	—	RP58R5	RP58R4	RP58R3	RP58R2	RP58R1	RP58R0
RPOR14	—	—	RP61R5	RP61R4	RP61R3	RP61R2	RP61R1	RP61R0	—	—	RP60R5	RP60R4	RP60R3	RP60R2	RP60R1	RP60R0
RPOR15	—	—	RP72R5	RP72R4	RP72R3	RP72R2	RP72R1	RP72R0	—	—	RP65R5	RP65R4	RP65R3	RP65R2	RP65R1	RP65R0
RPOR16	—	—	RP77R5	RP77R4	RP77R3	RP77R2	RP77R1	RP77R0	—	—	RP74R5	RP74R4	RP74R3	RP74R2	RP74R1	RP74R0
RPOR17	—	—	RP177R5	RP177R4	RP177R3	RP177R2	RP177R1	RP177R0	—	—	RP176R5	RP176R4	RP176R3	RP176R2	RP176R1	RP176R0
RPOR18	—	—	RP179R5	RP179R4	RP179R3	RP179R2	RP179R1	RP179R0	—	—	RP178R5	RP178R4	RP178R3	RP178R2	RP178R1	RP178R0
RPOR19	—	—	RP181R5	RP181R4	RP181R3	RP181R2	RP181R1	RP181R0	—	—	RP180R5	RP180R4	RP180R3	RP180R2	RP180R1	RP180R0

© 2018-2019 Microchip Technology Inc.

9.0 OSCILLATOR WITH HIGH-FREQUENCY PLL

Note 1: This data sheet summarizes the features of the dsPIC33CK64MP105 family of devices. It is not intended to be a comprehensive reference source. To complement the information in this data sheet, refer to **"Oscillator Module with High-Speed PLL"** (www.microchip.com/DS70005255) in the *"dsPIC33/PIC24 Family Reference Manual"*.

The dsPIC33CK64MP105 family oscillator with high-frequency PLL includes these characteristics:

- On-Chip Phase-Locked Loop (PLL) to Boost Internal Operating Frequency on Select Internal and External Oscillator Sources
- Auxiliary PLL (APLL) Clock Generator to Boost Operating Frequency for Peripherals
- Doze mode for System Power Savings
- Scalable Reference Clock Output (REFCLKO)
- On-the-Fly Clock Switching between Various Clock Sources
- Fail-Safe Clock Monitoring (FSCM) that Detects Clock Failure and Permits Safe Application Recovery or Shutdown

A block diagram of the dsPIC33CK64MP105 oscillator system is shown in Figure 9-1.

FIGURE 9-1: dsPIC33CK64MP105 CORE CLOCK SOURCES BLOCK DIAGRAM

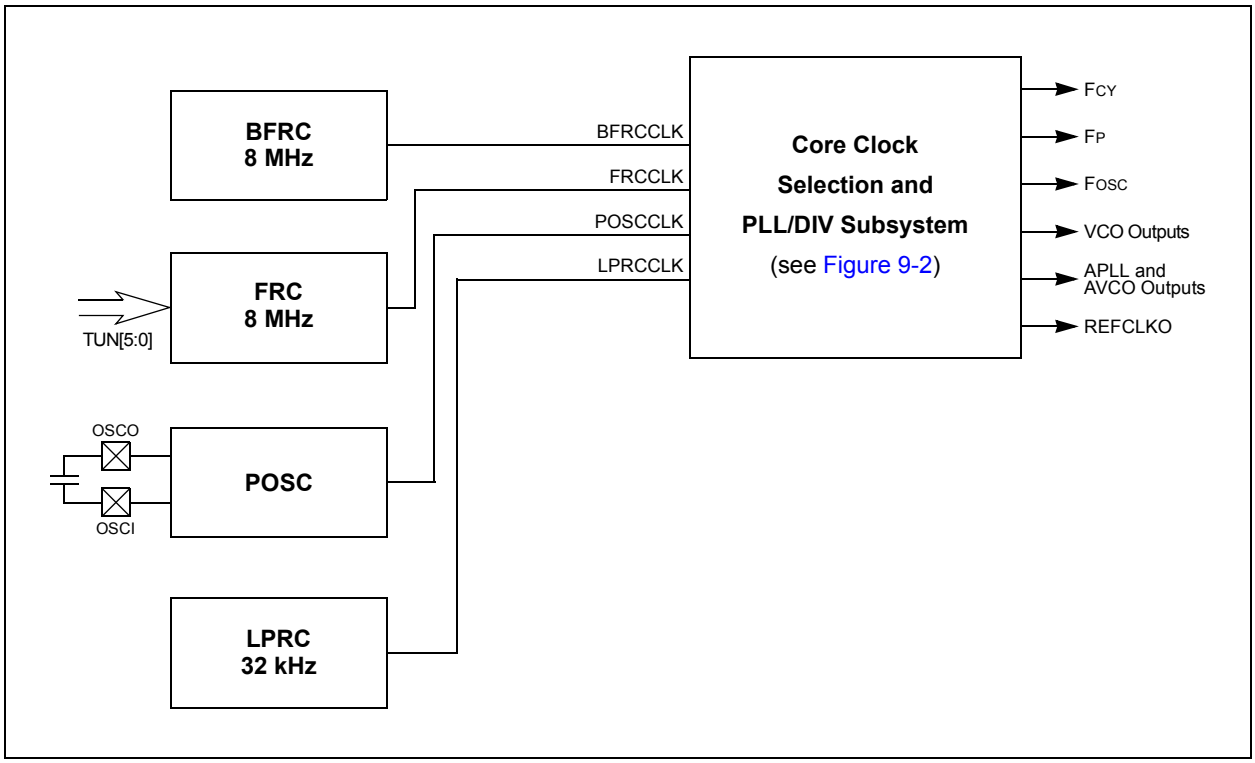

FIGURE 9-2: dsPIC33CK64MP105 CORE OSCILLATOR SUBSYSTEM

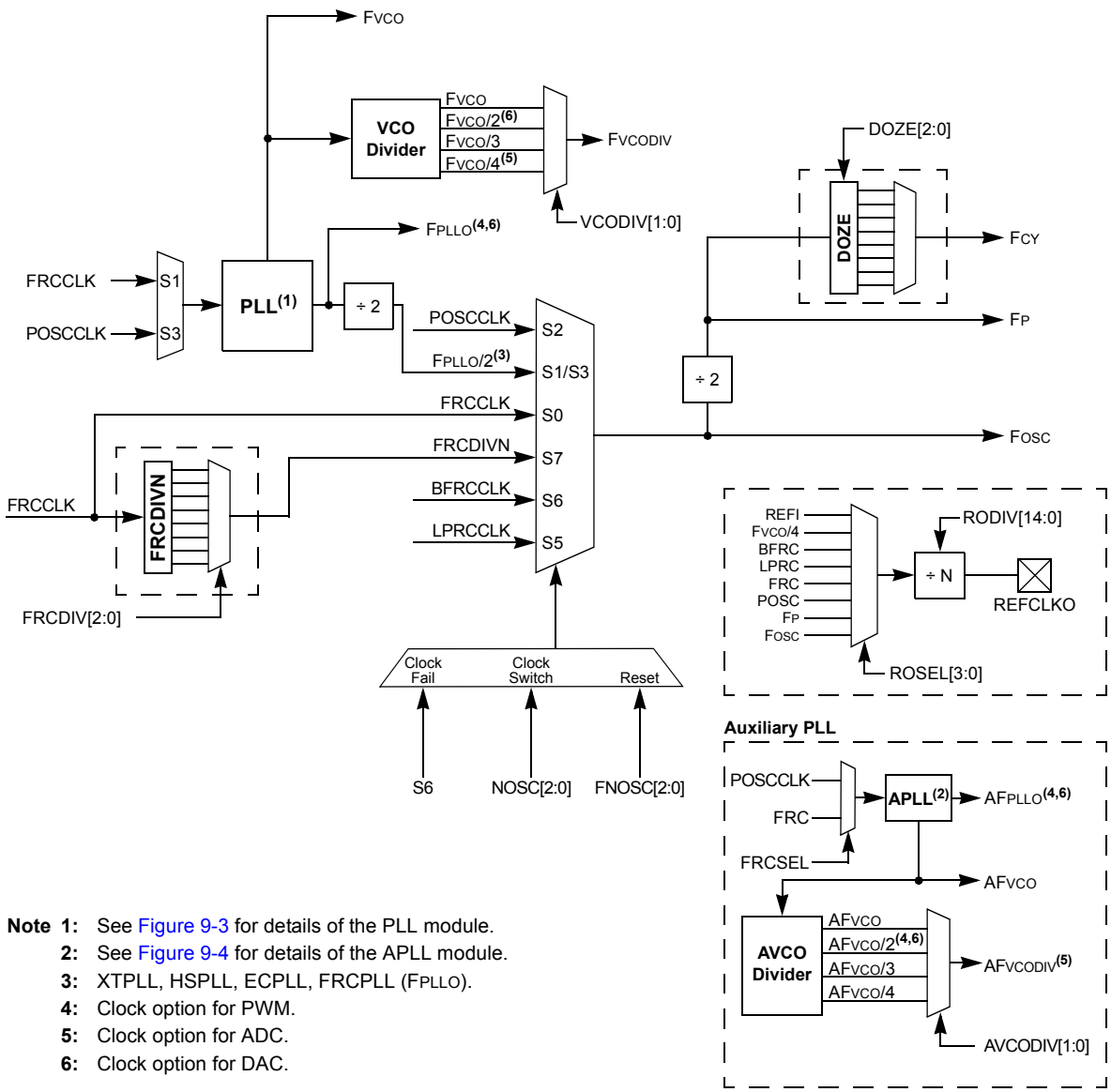

Note 1: See Figure 9-3 for details of the PLL module.
2: See Figure 9-4 for details of the APLL module.
3: XTPLL, HSPLL, ECPLL, FRCPLL (FPLLO).
4: Clock option for PWM.
5: Clock option for ADC.
6: Clock option for DAC.

© 2018-2019 Microchip Technology Inc.

9.1 Primary PLL

The Primary Oscillator and internal FRC Oscillator sources can optionally use an on-chip PLL to obtain higher operating speeds. Figure 9-3 illustrates a block diagram of the PLL module.

For PLL operation, the following requirements must be met at all times without exception:

- The PLL Input Frequency (F_{PLLI}) must be in the range of 8 MHz to 64 MHz
- The PFD Input Frequency (F_{PFD}) must be in the range of 8 MHz to (F_{VCO}/16) MHz

The VCO Output Frequency (F_{VCO}) must be in the range of 400 MHz to 1600 MHz

FIGURE 9-3: PLL AND VCO DETAIL

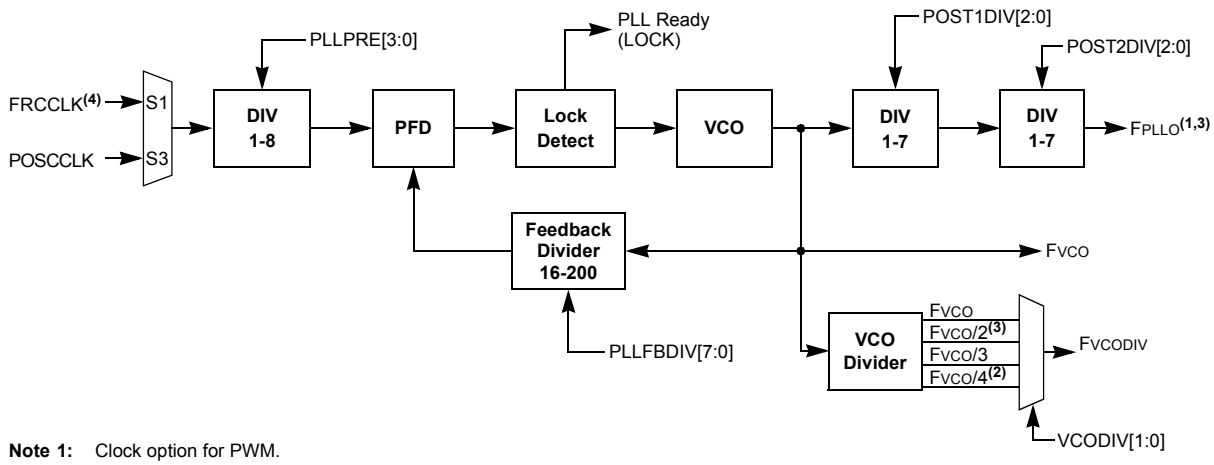

Note 1: Clock option for PWM.
2: Clock option for ADC.
3: Clock option for DAC.
4: PLL source is always FRC unless FNOSC is the Primary Oscillator with PLL.

Equation 9-1 provides the relationship between the PLL Input Frequency (FPLLI) and VCO Output Frequency (FVCO).

EQUATION 9-1: FVCO CALCULATION

$$F_{VCO} = F_{PLLI} \times \left(\frac{M}{N1}\right) = F_{PLLI} \times \left(\frac{PLLFBDIV[7:0]}{PLLPRE[3:0]}\right)$$

Equation 9-2 provides the relationship between the PLL Input Frequency (FPLLI) and PLL Output Frequency (FPLLO).

EQUATION 9-2: FPLLO CALCULATION

$$F_{PLLO} = F_{PLLI} \times \left(\frac{M}{N1 \times N2 \times N3}\right) = F_{PLLI} \times \left(\frac{PLLFBDIV[7:0]}{PLLPRE[3:0] \times POST1DIV[2:0] \times POST2DIV[2:0]}\right)$$

Where:

$M = PLLFBDIV[7:0]$
$N1 = PLLPRE[3:0]$
$N2 = POST1DIV[2:0]$
$N3 = POST2DIV[2:0]$

Note: The PLL Phase Detector Input Divider Select (PLLPREx) bits and the PLL Feedback Divider (PLLFBDIVx) bits should not be changed when operating in PLL mode. Therefore, the user must start in either a non-PLL mode or clock switch to a non-PLL mode (e.g., internal FRC Oscillator) to make any necessary changes and then clock switch to the desired PLL mode.

It is not permitted to directly clock switch from one PLL clock source to a different PLL clock source. The user would need to transition between PLL clock sources with a clock switch to a non-PLL clock source.

© 2018-2019 Microchip Technology Inc.

Example 9-1 illustrates code for using the PLL (50 MIPS) with the Primary Oscillator.

EXAMPLE 9-1: CODE EXAMPLE FOR USING PLL (50 MIPS) WITH PRIMARY OSCILLATOR (POSC)

```
//code example for 50 MIPS system clock using POSC with 10 MHz external crystal

// Select Internal FRC at POR
_FOSCSEL(FNOSC_FRC & IESO_OFF);

// Enable Clock Switching and Configure POSC in XT mode
_FOSC(FCKSM_CSECMD & POSCMD_XT);

int main()
{
    // Configure PLL prescaler, both PLL postscalers, and PLL feedback divider
    CLKDIVbits.PLLPRE = 1;          // N1=1
    PLLFBDbits.PLLFBDIV = 100;      // M = 100
    PLLDIVbits.POST1DIV = 5;        // N2=5
    PLLDIVbits.POST2DIV = 1;        // N3=1

    // Initiate Clock Switch to Primary Oscillator with PLL (NOSC=0b011)
    __builtin_write_OSCCONH(0x03);
    __builtin_write_OSCCONL(OSCCON | 0x01);

    // Wait for Clock switch to occur
    while (OSCCONbits.OSWEN!= 0);

    // Wait for PLL to lock
    while (OSCCONbits.LOCK!= 1);
}
```

Example 9-2 illustrates code for using the PLL with an 8 MHz internal FRC.

EXAMPLE 9-2: CODE EXAMPLE FOR USING PLL (50 MIPS) WITH 8 MHz INTERNAL FRC

```
//code example for 50 MIPS system clock using 8MHz FRC

// Select Internal FRC at POR
_FOSCSEL(FNOSC_FRC & IESO_OFF);

// Enable Clock Switching
_FOSC(FCKSM_CSECMD);

int main()
{
    // Configure PLL prescaler, both PLL postscalers, and PLL feedback divider
    CLKDIVbits.PLLPRE = 1;          // N1=1
    PLLFBDbits.PLLFBDIV = 125;      // M = 125
    PLLDIVbits.POST1DIV = 5;        // N2=5
    PLLDIVbits.POST2DIV = 1;        // N3=1

    // Initiate Clock Switch to FRC with PLL (NOSC=0b001)
    __builtin_write_OSCCONH(0x01);
    __builtin_write_OSCCONL(OSCCON | 0x01);

    // Wait for Clock switch to occur
    while (OSCCONbits.OSWEN!= 0);

    // Wait for PLL to lock
    while (OSCCONbits.LOCK!= 1);
}
```

9.2 Auxiliary PLL

The dsPIC33CK64MP105 device family implements an Auxiliary PLL (APLL) module, which is used to generate various peripheral clock sources independent of the system clock. Figure 9-4 shows a block diagram of the APLL module.

For APLL operation, the following requirements must be met at all times without exception:

- The APLL Input Frequency (AF_{PLLI}) must be in the range of 8 MHz to 64 MHz
- The APFD Input Frequency (AF_{PFD}) must be in the range of 8 MHz to (AF_{VCO}/16) MHz
- The AVCO Output Frequency (AF_{VCO}) must be in the range of 400 MHz to 1600 MHz

FIGURE 9-4: APLL AND VCO DETAIL

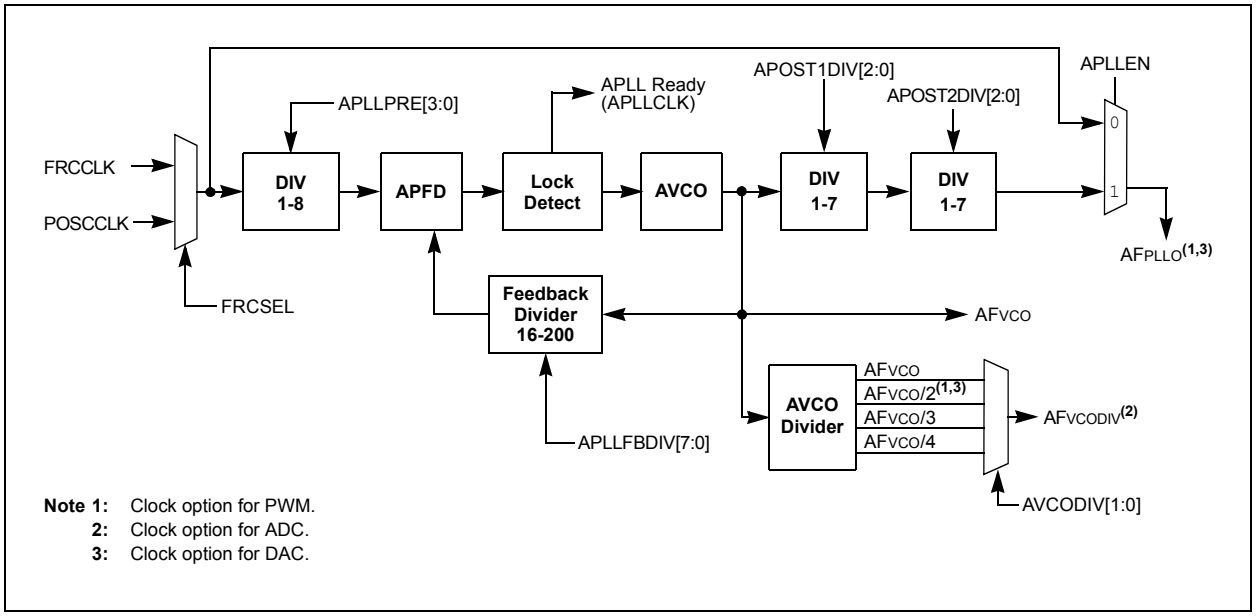

© 2018-2019 Microchip Technology Inc.

Equation 9-3 provides the relationship between the APLL Input Frequency (AFPLLI) and the AVCO Output Frequency (AFVCO).

EQUATION 9-3: AFVCO CALCULATION

$$AFVCO = AFPLLI \times \left(\frac{M}{N1}\right) = AFPLLI \times \left(\frac{APLLFBDIV[7:0]}{APLLPRE[3:0]}\right)$$

Equation 9-4 provides the relationship between the APLL Input Frequency (AFPLLI) and APLL Output Frequency (AFPLLO).

EQUATION 9-4: AFPLLO CALCULATION

$$AFPLLO = AFPLLI \times \left(\frac{M}{N1 \times N2 \times N3}\right) = AFPLLI \times \left(\frac{APLLFBDIV[7:0]}{APLLPRE[3:0] \times APOST1DIV[2:0] \times APOST2DIV[2:0]}\right)$$

Where:

M = $APLLFBDIV[7:0]$
$N1$ = $APLLPRE[3:0]$
$N2$ = $APOST1DIV[2:0]$
$N3$ = $APOST2DIV[2:0]$

EXAMPLE 9-3: CODE EXAMPLE FOR USING AUXILIARY PLL WITH THE INTERNAL FRC OSCILLATOR

```
//code example for AFVCO = 1 GHz and AFPLLO = 500 MHz using 8 MHz internal FRC
// Configure the source clock for the APLL
ACLKCON1bits.FRCSEL = 1;              // Select internal FRC as the clock source
// Configure the APLL prescaler, APLL feedback divider, and both APLL postscalers.
ACLKCON1bits.APLLPRE = 1;             // N1 = 1
APLLFBD1bits.APLLFBDIV = 125;         // M = 125
APLLDIV1bits.APOST1DIV = 2;           // N2 = 2
APLLDIV1bits.APOST2DIV = 1;           // N3 = 1
// Enable APLL
ACLKCON1bits.APLLEN = 1;
```

Note: Even with the APLLEN bit set, another peripheral must generate a clock request before the APLL will start.

9.3 CPU Clocking

The dsPIC33CK64MP105 devices can be configured to use any of the following clock configurations:

- Primary Oscillator (POSC) on the OSCI and OSCO pins
- Internal Fast RC Oscillator (FRC) with optional clock divider
- Internal Low-Power RC Oscillator (LPRC)
- Primary Oscillator with PLL (ECPLL, HSPLL, XTPLL)
- Internal Fast RC Oscillator with PLL (FRCPLL)
- Backup Internal Fast RC Oscillator (BFRC)

The system clock source is divided by two to produce the internal instruction cycle clock. In this document, the instruction cycle clock is denoted by FCY. The timing diagram in Figure 9-5 illustrates the relationship between the system clock (FOSC), the instruction cycle clock (FCY) and the Program Counter (PC).

The internal instruction cycle clock (FCY) can be output on the OSCO I/O pin if the Primary Oscillator mode (POSCMD[1:0]) is not configured as HS/XT. For more information, see **Section 9.0 "Oscillator with High-Frequency PLL"**.

FIGURE 9-5: CLOCK AND INSTRUCTION CYCLE TIMING

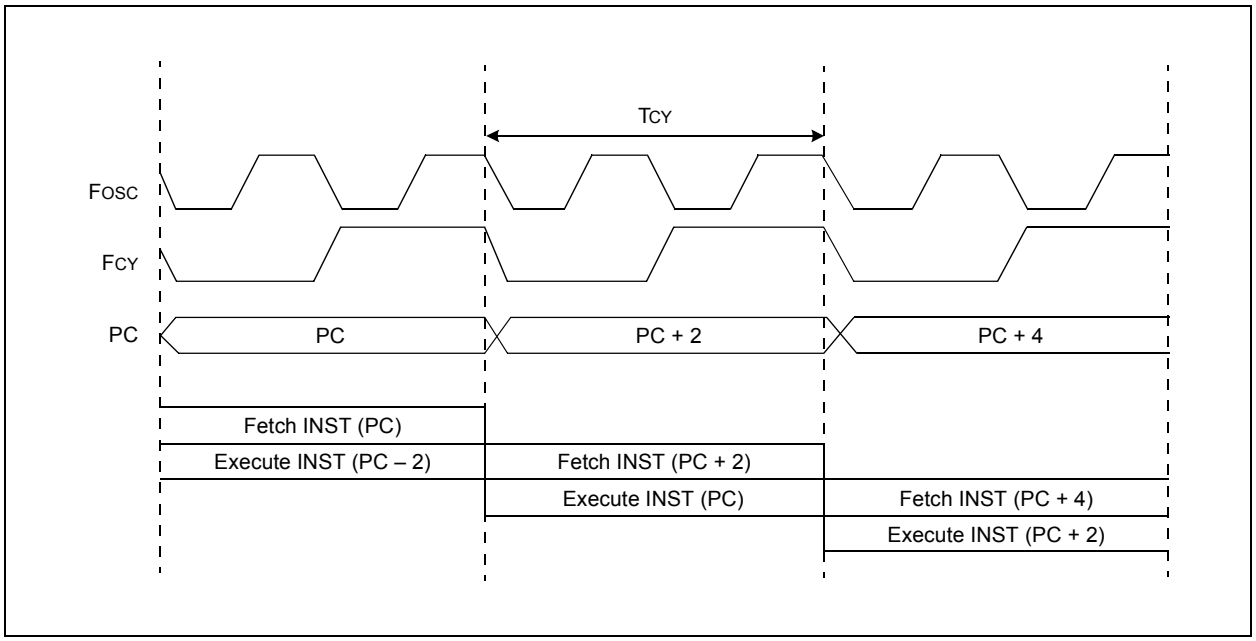

© 2018-2019 Microchip Technology Inc.

9.4 Primary Oscillator (POSC)

The dsPIC33CK64MP105 family devices feature a Primary Oscillator (POSC) and it is available on the OSCI and OSCO pins. This connection enables an external crystal (or ceramic resonator) to provide the clock to the device. The Primary Oscillator provides three modes of operation:

- Medium Speed Oscillator (XT Mode):
  The XT mode is a Medium Gain, Medium Frequency mode used to work with crystal frequencies of 3.5 MHz to 10 MHz.
- High-Speed Oscillator (HS Mode):
  The HS mode is a High-Gain, High-Frequency mode used to work with crystal frequencies of 10 MHz to 32 MHz.
- External Clock Source Operation (EC Mode):
  If the on-chip oscillator is not used, the EC mode allows the internal oscillator to be bypassed. The device clocks are generated from an external source (0 MHz to up to 64 MHz) and input on the OSCI pin.

9.5 Internal Fast RC (FRC) Oscillator

The dsPIC33CK64MP105 family devices contain one instance of the internal Fast RC (FRC) Oscillator and it provides a nominal 8 MHz clock without requiring an external crystal or ceramic resonator, which results in system cost savings for applications that do not require a precise clock reference.

The application software can tune the frequency of the oscillator using the FRC Oscillator Tuning bits (TUN[5:0]) in the FRC Oscillator Tuning register (OSCTUN[5:0]).

9.6 Low-Power RC (LPRC) Oscillator

The dsPIC33CK64MP105 family devices contain one instance of the Low-Power RC (LPRC) Oscillator and it provides a nominal clock frequency of 32 kHz, and is the clock source for the Power-up Timer (PWRT), Watchdog Timer (WDT) and Fail-Safe Clock Monitor (FSCM) circuits in the clock subsystem.

The LPRC Oscillator is the clock source for the PWRT, WDT and FSCM. The LPRC Oscillator is enabled at power-on.

The LPRC Oscillator remains enabled under these conditions:

- The FSCM is enabled
- The WDT is enabled
- The LPRC Oscillator is selected as the system clock

If none of these conditions is true, the LPRC Oscillator shuts off after the PWRT expires. The LPRC Oscillator is shut off in Sleep mode.

9.7 Backup Internal Fast RC (BFRC) Oscillator

The oscillator block provides a stable reference clock source for the Fail-Safe Clock Monitor (FSCM). When FSCM is enabled in the FCKSM[1:0] Configuration bits (FOSC[7:6]), it constantly monitors the main clock source against a reference signal from the 8 MHz Backup Internal Fast RC (BFRC) Oscillator. In case of a clock failure, the Fail-Safe Clock Monitor switches the clock to the BFRC Oscillator, allowing for continued low-speed operation or a safe application shutdown.

9.8 Reference Clock Output

In addition to the CLKO output (FOSC/2), the dsPIC33CK64MP105 family devices can be configured to provide a reference clock output signal to a port pin. This feature is available in all oscillator configurations and allows the user to select a greater range of clock sub-multiples to drive external devices in the application. CLKO is enabled by Configuration bit, OSCIOFCN, and is independent of the REFCLKO reference clock. REFCLKO is mappable to any I/O pin that has mapped output capability. Refer to Table 8-7 for more information. The Reference Clock Output module block diagram is shown in Figure 9-6.

FIGURE 9-6: REFERENCE CLOCK GENERATOR

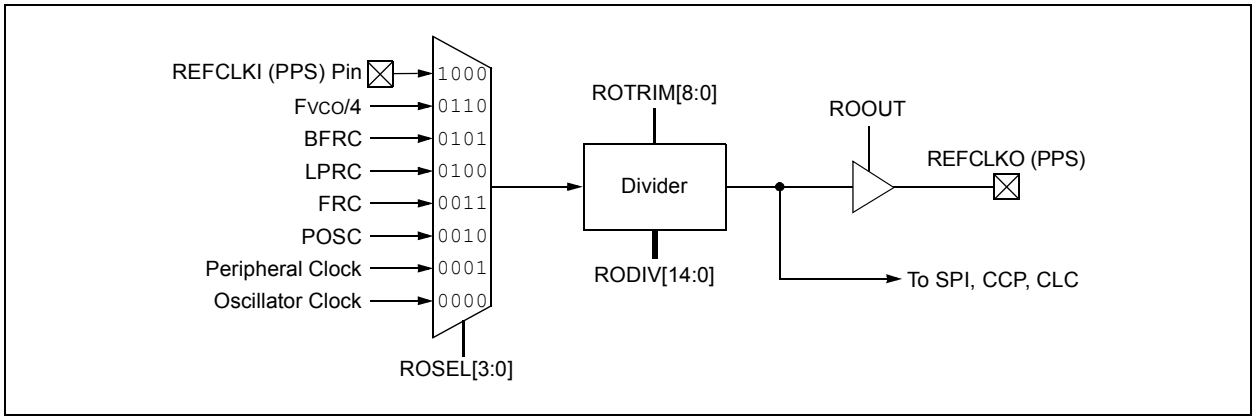

This reference clock output is controlled by the REFOCONL and REFOCONH registers. Setting the ROEN bit (REFOCONL[15]) makes the clock signal available on the REFCLKO pin. The RODIV[14:0] bits (REFOCONH[14:0]) and ROTRIM[8:0] bits (REFOTRIM[15:7]) enable the selection of different clock divider options. The formula for determining the final frequency output is shown in Equation 9-5. The ROSWEN bit (REFOCONL[9]) indicates that the clock divider has been successfully switched. In order to switch the REFCLKO divider, the user should ensure that this bit reads as '0'. Write the updated values to the RODIV[14:0] or ROTRIM[8:0] bits, set the ROSWEN bit and then wait until it is cleared before assuming that the REFCLKO clock is valid.

EQUATION 9-5: CALCULATING FREQUENCY OUTPUT

$$F_{REFOUT} = \frac{F_{REFIN}}{2 \cdot (RODIV[14:0] + ROTRIM[8:0]/512)}$$

Where: F_{REFOUT} = Output Frequency
F_{REFIN} = Input Frequency
When $RODIV[14:0]$ = 0, the output clock is the same as the input clock.

The ROSEL[3:0] bits (REFOCONL[3:0]) determine which clock source is used for the reference clock output. The ROSLP bit (REFOCONL[11]) determines if the reference source is available on REFCLKO when the device is in Sleep mode.

To use the reference clock output in Sleep mode, both the ROSLP bit must be set and the clock selected by the ROSEL[3:0] bits must be enabled for operation during Sleep mode, if possible. Clearing the ROSEL[3:0] bits allows the reference output frequency to change, as the system clock changes, during any clock switches. The ROOUT bit enables/disables the reference clock output on the REFCLKO pin.

The ROACTIV bit (REFOCONL[8]) indicates that the module is active; it can be cleared by disabling the module (setting ROEN to '0'). The user must not change the reference clock source, or adjust the divider when the ROACTIV bit indicates that the module is active. To avoid glitches, the user should not disable the module until the ROACTIV bit is '1'.

© 2018-2019 Microchip Technology Inc.

9.9 Oscillator Configuration

The oscillator system has both Configuration registers and SFRs to configure, control and monitor the system. The FOSCSEL and FOSC Configuration registers (Register 28-4 and Register 28-5, respectively) are used for initial setup.

Table 9-1 lists the configuration settings that select the device's oscillator source and operating mode at a Power-on Reset (POR).

TABLE 9-1: CONFIGURATION BIT VALUES FOR CLOCK SELECTION

Oscillator Source	Oscillator Mode	FNOSC[2:0] Value	POSCMD[1:0] Value
S0	Fast RC Oscillator (FRC)	000	xx
S1	Fast RC Oscillator with PLL (FRCPLL)	001	xx
S2	Primary Oscillator (EC)	010	00
S2	Primary Oscillator (XT)	010	01
S2	Primary Oscillator (HS)	010	10
S3	Primary Oscillator with PLL (ECPLL)	011	00
S3	Primary Oscillator with PLL (XTPLL)	011	01
S3	Primary Oscillator with PLL (HSPLL)	011	10
S4	Reserved	100	xx
S5	Low-Power RC Oscillator (LPRC)	101	xx
S6	Backup FRC (BFRC)	110	xx
S7	Fast RC Oscillator with ÷ N Divider (FRCDIVN)	111	xx

9.10 OSCCON Unlock Sequence

The OSCCON register is protected against unintended writes through a lock mechanism. The upper and lower bytes of OSCCON have their own unlock sequence, and both must be used when writing to both bytes of the register. Before OSCCON can be written to, the following unlock sequence must be used:

1. Execute the unlock sequence for the OSCCON high byte.

   In two back-to-back instructions:
   - Write 0x78 to OSCCON[15:8]
   - Write 0x9A to OSCCON[15:8]
2. In the instruction immediately following the unlock sequence, the OSCCON[15:8] bits can be modified.
3. Execute the unlock sequence for the OSCCON low byte.

   In two back-to-back instructions:
   - Write 0x46 to OSCCON[7:0]
   - Write 0x57 to OSCCON[7:0]
4. In the instruction immediately following the unlock sequence, the OSCCON[7:0] bits can be modified.

Note: MPLAB® XC16 provides a built-in C language function, including the unlocking sequence to modify high and low bytes in the OSCCON register:

```
__builtin_write_OSCCONH(value)
__builtin_write_OSCCONL(value)
```

9.11 Oscillator Control Registers

REGISTER 9-1: OSCCON: OSCILLATOR CONTROL REGISTER(1)

U-0	R-0	R-0	R-0	U-0	R/W-y	R/W-y	R/W-y
—	COSC2	COSC1	COSC0	—	NOSC2(2)	NOSC1(2)	NOSC0(2)
bit 15							bit 8

R/W-0	U-0	R-0	U-0	R/W-0	U-0	U-0	R/W-0
CLKLOCK	—	LOCK	—	CF(3)	—	—	OSWEN
bit 7							bit 0

Legend:	y = Value set from Configuration bits on POR		
R = Readable bit	W = Writable bit	U = Unimplemented bit, read as ‘0’	
-n = Value at POR	‘1’ = Bit is set	‘0’ = Bit is cleared	x = Bit is unknown

bit 15 **Unimplemented:** Read as ‘0’

bit 14-12 **COSC[2:0]:** Current Oscillator Selection bits (read-only)
111 = Fast RC Oscillator (FRC) with Divide-by-n (FRCDIVN)
110 = Backup FRC (BFRC)
101 = Low-Power RC Oscillator (LPRC)
100 = Reserved – default to FRC
011 = Primary Oscillator (XT, HS, EC) with PLL (XTPLL, HSPLL, ECPLL)
010 = Primary Oscillator (XT, HS, EC)
001 = Fast RC Oscillator (FRC) with PLL (FRCPLL)
000 = Fast RC Oscillator (FRC)

bit 11 **Unimplemented:** Read as ‘0’

bit 10-8 **NOSC[2:0]:** New Oscillator Selection bits(2)
111 = Fast RC Oscillator (FRC) with Divide-by-n (FRCDIVN)
110 = Backup FRC (BFRC)
101 = Low-Power RC Oscillator (LPRC)
100 = Reserved – default to FRC
011 = Primary Oscillator (XT, HS, EC) with PLL (XTPLL, HSPLL, ECPLL)
010 = Primary Oscillator (XT, HS, EC)
001 = Fast RC Oscillator (FRC) with PLL (FRCPLL)
000 = Fast RC Oscillator (FRC)

bit 7 **CLKLOCK:** Clock Lock Enable bit
1 = If (FCKSM0 = 1), then clock and PLL configurations are locked; if (FCKSM0 = 0), then clock and PLL configurations may be modified
0 = Clock and PLL selections are not locked, configurations may be modified

bit 6 **Unimplemented:** Read as ‘0’

bit 5 **LOCK:** PLL Lock Status bit (read-only)
1 = Indicates that PLL is in lock or PLL start-up timer is satisfied
0 = Indicates that PLL is out of lock, start-up timer is in progress or PLL is disabled

bit 4 **Unimplemented:** Read as ‘0’

Note 1: Writes to this register require an unlock sequence (see **Section 9.10 “OSCCON Unlock Sequence”**).

2: Direct clock switches between any Primary Oscillator mode with PLL and FRCPLL mode are not permitted. This applies to clock switches in either direction. In these instances, the application must switch to FRC mode as a transitional clock source between the two PLL modes.

3: This bit should only be cleared in software. Setting the bit in software (= 1) will have the same effect as an actual oscillator failure and will trigger an oscillator failure trap.

© 2018-2019 Microchip Technology Inc.

REGISTER 9-1: OSCCON: OSCILLATOR CONTROL REGISTER(1) (CONTINUED)

bit 3	**CF:** Clock Fail Detect bit(3) 1 = FSCM has detected a clock failure 0 = FSCM has not detected a clock failure
bit 2-1	**Unimplemented:** Read as '0'
bit 0	**OSWEN:** Oscillator Switch Enable bit 1 = Requests oscillator switch to the selection specified by the NOSC[2:0] bits 0 = Oscillator switch is complete

Note 1: Writes to this register require an unlock sequence (see **Section 9.10 "OSCCON Unlock Sequence"**).

2: Direct clock switches between any Primary Oscillator mode with PLL and FRCPLL mode are not permitted. This applies to clock switches in either direction. In these instances, the application must switch to FRC mode as a transitional clock source between the two PLL modes.

3: This bit should only be cleared in software. Setting the bit in software (= 1) will have the same effect as an actual oscillator failure and will trigger an oscillator failure trap.

REGISTER 9-2: CLKDIV: CLOCK DIVIDER REGISTER

R/W-0	R/W-0	R/W-1	R/W-1	R/W-0	R/W-0	R/W-0	R/W-0
ROI	DOZE2(1)	DOZE1(1)	DOZE0(1)	DOZEN(2,3)	FRCDIV2	FRCDIV1	FRCDIV0
bit 15							bit 8

U-0	U-0	r-0	r-0	R/W-0	R/W-0	R/W-0	R/W-1
—	—	—	—	PLLPRE3(4)	PLLPRE2(4)	PLLPRE1(4)	PLLPRE0(4)
bit 7							bit 0

Legend:	r = Reserved bit		
R = Readable bit	W = Writable bit	U = Unimplemented bit, read as ‘0’	
-n = Value at POR	‘1’ = Bit is set	‘0’ = Bit is cleared	x = Bit is unknown

bit 15 **ROI:** Recover on Interrupt bit
1 = Interrupts will clear the DOZEN bit and the processor clock, and the peripheral clock ratio is set to 1:1
0 = Interrupts have no effect on the DOZEN bit

bit 14-12 **DOZE[2:0]:** Processor Clock Reduction Select bits(1)
111 = FP divided by 128
110 = FP divided by 64
101 = FP divided by 32
100 = FP divided by 16
011 = FP divided by 8 (default)
010 = FP divided by 4
001 = FP divided by 2
000 = FP divided by 1

bit 11 **DOZEN:** Doze Mode Enable bit(2,3)
1 = DOZE[2:0] field specifies the ratio between the peripheral clocks and the processor clocks
0 = Processor clock and peripheral clock ratio is forced to 1:1

bit 10-8 **FRCDIV[2:0]:** Internal Fast RC Oscillator Postscaler bits
111 = FRC divided by 256
110 = FRC divided by 64
101 = FRC divided by 32
100 = FRC divided by 16
011 = FRC divided by 8
010 = FRC divided by 4
001 = FRC divided by 2
000 = FRC divided by 1 (default)

bit 7-6 **Unimplemented:** Read as ‘0’

bit 5-4 **Reserved:** Read as ‘0’

Note 1: The DOZE[2:0] bits can only be written to when the DOZEN bit is clear. If DOZEN = 1, any writes to DOZE[2:0] are ignored.

2: This bit is cleared when the ROI bit is set and an interrupt occurs.

3: The DOZEN bit cannot be set if DOZE[2:0] = 000. If DOZE[2:0] = 000, any attempt by user software to set the DOZEN bit is ignored.

4: PLLPRE[3:0] may be updated while the PLL is operating, but the VCO may overshoot.

© 2018-2019 Microchip Technology Inc.

REGISTER 9-2: CLKDIV: CLOCK DIVIDER REGISTER (CONTINUED)

bit 3-0 **PLLPRE[3:0]:** PLL Phase Detector Input Divider Select bits (also denoted as 'N1', PLL prescaler)[4]

11111 = Reserved
...
1001 = Reserved
1000 = Input divided by 8
0111 = Input divided by 7
0110 = Input divided by 6
0101 = Input divided by 5
0100 = Input divided by 4
0011 = Input divided by 3
0010 = Input divided by 2
0001 = Input divided by 1 (power-on default selection)
0000 = Reserved

Note 1: The DOZE[2:0] bits can only be written to when the DOZEN bit is clear. If DOZEN = 1, any writes to DOZE[2:0] are ignored.

2: This bit is cleared when the ROI bit is set and an interrupt occurs.

3: The DOZEN bit cannot be set if DOZE[2:0] = 000. If DOZE[2:0] = 000, any attempt by user software to set the DOZEN bit is ignored.

4: PLLPRE[3:0] may be updated while the PLL is operating, but the VCO may overshoot.

REGISTER 9-3: PLLFBD: PLL FEEDBACK DIVIDER REGISTER

U-0	U-0	U-0	U-0	r-0	r-0	r-0	r-0
—	—	—	—	—	—	—	—
bit 15							bit 8

R/W-1	R/W-0	R/W-0	R/W-1	R/W-0	R/W-1	R/W-1	R/W-0
PLLFBDIV[7:0]							
bit 7							bit 0

Legend:	r = Reserved bit		
R = Readable bit	W = Writable bit	U = Unimplemented bit, read as ‘0’	
-n = Value at POR	‘1’ = Bit is set	‘0’ = Bit is cleared	x = Bit is unknown

bit 15-12 **Unimplemented:** Read as ‘0’

bit 11-8 **Reserved:** Maintain as ‘0’

bit 7-0 **PLLFBDIV[7:0]:** PLL Feedback Divider bits (also denoted as ‘M’, PLL multiplier)

11111111 = Reserved
...
11001000 = 200 Maximum(1)
...
10010110 = 150 (default)
...
00010000 = 16 Minimum(1)
...
00000010 = Reserved
00000001 = Reserved
00000000 = Reserved

Note 1: The allowed range is 16-200 (decimal). The rest of the values are reserved and should be avoided. The power on the default feedback divider is 150 (decimal) with an 8 MHz FRC input clock. The VCO frequency is 1.2 GHz.

© 2018-2019 Microchip Technology Inc.

REGISTER 9-4: OSCTUN: FRC OSCILLATOR TUNING REGISTER

U-0	U-0	U-0	U-0	U-0	U-0	U-0	U-0
—	—	—	—	—	—	—	—
bit 15							bit 8

U-0	U-0	R/W-0	R/W-0	R/W-0	R/W-0	R/W-0	R/W-0
—	—	TUN[5:0]					
bit 7							bit 0

Legend:			
R = Readable bit	W = Writable bit	U = Unimplemented bit, read as ‘0’	
-n = Value at POR	‘1’ = Bit is set	‘0’ = Bit is cleared	x = Bit is unknown

bit 15-6 **Unimplemented:** Read as ‘0’

bit 5-0 **TUN[5:0]:** FRC Oscillator Tuning bits

011111 = Maximum frequency deviation of +1.45%
011110 = Center frequency + 1.40%
. . .
000001 = Center frequency + 0.047%
000000 = Center frequency (8.00 MHz nominal)
111111 = Center frequency – 0.047%
. . .
100001 = Center frequency – 1.45%
100000 = Minimum frequency deviation of – 1.50%

REGISTER 9-5: PLLDIV: PLL OUTPUT DIVIDER REGISTER

U-0	U-0	U-0	U-0	U-0	U-0	R/W-0	R/W-0
—	—	—	—	—	—	VCODIV1	VCODIV0
bit 15							bit 8

U-0	R/W-1	R/W-0	R/W-0	U-0	R/W-0	R/W-0	R/W-1
—	POST1DIV2(1,2)	POST1DIV1(1,2)	POST1DIV0(1,2)	—	POST2DIV2(1,2)	POST2DIV1(1,2)	POST2DIV0(1,2)
bit 7							bit 0

Legend:			
R = Readable bit	W = Writable bit	U = Unimplemented bit, read as ‘0’	
-n = Value at POR	‘1’ = Bit is set	‘0’ = Bit is cleared	x = Bit is unknown

bit 15-10 **Unimplemented:** Read as ‘0’

bit 9-8 **VCODIV[1:0]:** PLL VCO Output Divider Select bits
11 = Fvco
10 = Fvco/2
01 = Fvco/3
00 = Fvco/4

bit 7 **Unimplemented:** Read as ‘0’

bit 6-4 **POST1DIV[2:0]:** PLL Output Divider #1 Ratio bits(1,2)
POST1DIV[2:0] can have a valid value, from 1 to 7 (POST1DIVx value should be greater than or equal to the POST2DIVx value). The POST1DIVx divider is designed to operate at higher clock rates than the POST2DIVx divider.

bit 3 **Unimplemented:** Read as ‘0’

bit 2-0 **POST2DIV[2:0]:** PLL Output Divider #2 Ratio bits(1,2)
POST2DIV[2:0] can have a valid value, from 1 to 7 (POST2DIVx value should be less than or equal to the POST1DIVx value). The POST1DIVx divider is designed to operate at higher clock rates than the POST2DIVx divider.

Note 1: The POST1DIVx and POST2DIVx divider values must not be changed while the PLL is operating.
2: The default values for POST1DIVx and POST2DIVx are 4 and 1, respectively, yielding a 150 MHz system source clock.

© 2018-2019 Microchip Technology Inc.

REGISTER 9-6: ACLKCON1: AUXILIARY CLOCK CONTROL REGISTER

R/W-0	R/W-0	U-0	U-0	U-0	U-0	U-0	R/W-0
APLLEN[1]	APLLCK	—	—	—	—	—	FRCSEL
bit 15							bit 8

U-0	U-0	r-0	r-0	R/W-0	R/W-0	R/W-0	R/W-1
—	—	—	—	APLLPRE3	APLLPRE2	APLLPRE1	APLLPRE0
bit 7							bit 0

Legend:	r = Reserved bit		
R = Readable bit	W = Writable bit	U = Unimplemented bit, read as ‘0’	
-n = Value at POR	‘1’ = Bit is set	‘0’ = Bit is cleared	x = Bit is unknown

bit 15 **APLLEN:** Auxiliary PLL Enable/Bypass select bit[1]
1 = AFPLLO is connected to the APLL post-divider output (bypass disabled)
0 = AFPLLO is connected to the APLL input clock (bypass enabled)

bit 14 **APLLCK:** APLL Phase-Locked State Status bit
1 = Auxiliary PLL is in lock
0 = Auxiliary PLL is not in lock

bit 13-9 **Unimplemented:** Read as ‘0’

bit 8 **FRCSEL:** FRC Clock Source Select bit
1 = FRC is the clock source for APLL
0 = Primary Oscillator is the clock source for APLL

bit 7-6 **Unimplemented:** Read as ‘0’

bit 5-4 **Reserved:** Maintain as ‘0’

bit 3-0 **APLLPRE[3:0]:** Auxiliary PLL Phase Detector Input Divider bits
1111 = Reserved
...
1001 = Reserved
1000 = Input divided by 8
0111 = Input divided by 7
0110 = Input divided by 6
0101 = Input divided by 5
0100 = Input divided by 4
0011 = Input divided by 3
0010 = Input divided by 2
0001 = Input divided by 1 (power-on default selection)
0000 = Reserved

Note 1: Even with the APLLEN bit set, another peripheral must generate a clock request before the APLL will start.

REGISTER 9-7: APLLFBD1: APLL FEEDBACK DIVIDER REGISTER

U-0	U-0	U-0	U-0	r-0	r-0	r-0	r-0
—	—	—	—	—	—	—	—
bit 15							bit 8

R/W-1	R/W-0	R/W-0	R/W-1	R/W-0	R/W-1	R/W-1	R/W-0
APLLFBDIV[7:0]							
bit 7							bit 0

Legend:	r = Reserved bit		
R = Readable bit	W = Writable bit	U = Unimplemented bit, read as ‘0’	
-n = Value at POR	‘1’ = Bit is set	‘0’ = Bit is cleared	x = Bit is unknown

bit 15-12 **Unimplemented:** Read as ‘0’

bit 11-8 **Reserved:** Maintain as ‘0’

bit 7-0 **APLLFBDIV[7:0]:** APLL Feedback Divider bits

11111111 = Reserved
. . .
11001000 = 200 maximum(1)
. . .
10010110 = 150 (default)
. . .
00010000 = 16 minimum(1)
. . .
00000010 = Reserved
00000001 = Reserved
00000000 = Reserved

Note 1: The allowed range is 16-200 (decimal). The rest of the values are reserved and should be avoided. The power-on default feedback divider is 150 (decimal) with an 8 MHz FRC input clock; the VCO frequency is 1.2 GHz.

© 2018-2019 Microchip Technology Inc.

REGISTER 9-8: APLLDIV1: APLL OUTPUT DIVIDER REGISTER

U-0	U-0	U-0	U-0	U-0	U-0	R/W-0	R/W-0
—	—	—	—	—	—	AVCODIV[1:0]	
bit 15							bit 8

U-0	R/W-1	R/W-0	R/W-0	U-0	R/W-0	R/W-0	R/W-1
—	APOST1DIV[2:0](1,2)			—	APOST2DIV[2:0](1,2)		
bit 7							bit 0

Legend:			
R = Readable bit	W = Writable bit	U = Unimplemented bit, read as ‘0’	
-n = Value at POR	‘1’ = Bit is set	‘0’ = Bit is cleared	x = Bit is unknown

bit 15-10 **Unimplemented:** Read as ‘0’

bit 9-8 **AVCODIV[1:0]:** APLL VCO Output Divider Select bits
11 = AFVCO
10 = AFVCO/2
01 = AFVCO/3
00 = AFVCO/4

bit 7 **Unimplemented:** Read as ‘0’

bit 6-4 **APOST1DIV[2:0]:** APLL Output Divider #1 Ratio bits(1,2)
APOST1DIV[2:0] can have a valid value, from 1 to 7 (the APOST1DIVx value should be greater than or equal to the APOST2DIVx value). The APOST1DIVx divider is designed to operate at higher clock rates than the APOST2DIVx divider.

bit 3 **Unimplemented:** Read as ‘0’

bit 2-0 **APOST2DIV[2:0]:** APLL Output Divider #2 Ratio bits(1,2)
APOST2DIV[2:0] can have a valid value, from 1 to 7 (the APOST2DIVx value should be less than or equal to the APOST1DIVx value). The APOST1DIVx divider is designed to operate at higher clock rates than the APOST2DIVx divider.

Note 1: The APOST1DIVx and APOST2DIVx values must not be changed while the PLL is operating.
2: The default values for APOST1DIVx and APOST2DIVx are 4 and 1, respectively, yielding a 150 MHz system source clock.

REGISTER 9-9: REFOCONL: REFERENCE CLOCK CONTROL LOW REGISTER

R/W-0	U-0	R/W-0	R/W-0	R/W-0	U-0	HC/R/W-0	HSC/R-0
ROEN	—	ROSIDL	ROOUT	ROSLP	—	ROSWEN	ROACTIV
bit 15							bit 8

U-0	U-0	U-0	U-0	R/W-0	R/W-0	R/W-0	R/W-0
—	—	—	—	ROSEL3	ROSEL2	ROSEL1	ROSEL0
bit 7							bit 0

Legend:	HC = Hardware Clearable bit	HSC = Hardware Settable/Clearable bit	
R = Readable bit	W = Writable bit	U = Unimplemented bit, read as ‘0’	
-n = Value at POR	‘1’ = Bit is set	‘0’ = Bit is cleared	x = Bit is unknown

bit 15 **ROEN:** Reference Clock Enable bit
1 = Reference Oscillator is enabled on the REFCLKO pin
0 = Reference Oscillator is disabled

bit 14 **Unimplemented:** Read as ‘0’

bit 13 **ROSIDL:** Reference Clock Stop in Idle bit
1 = Reference Oscillator continues to run in Idle mode
0 = Reference Oscillator is disabled in Idle mode

bit 12 **ROOUT:** Reference Clock Output Enable bit
1 = Reference clock external output is enabled and available on the REFCLKO pin
0 = Reference clock external output is disabled

bit 11 **ROSLP:** Reference Clock Stop in Sleep bit
1 = Reference Oscillator continues to run in Sleep modes
0 = Reference Oscillator is disabled in Sleep modes

bit 10 **Unimplemented:** Read as ‘0’

bit 9 **ROSWEN:** Reference Clock Output Enable bit
1 = Clock divider change (requested by changes to RODIVx) is requested or is in progress (set in software, cleared by hardware upon completion)
0 = Clock divider change has completed or is not pending

bit 8 **ROACTIV:** Reference Clock Status bit
1 = Reference clock is active; do not change clock source
0 = Reference clock is stopped; clock source and configuration may be safely changed

bit 7-4 **Unimplemented:** Read as ‘0’

bit 3-0 **ROSEL[3:0]:** Reference Clock Source Select bits
1111 = Reserved
... = Reserved
1000 = Reserved
0111 = REFI pin
0110 = $F_{VCO}/4$
0101 = BFRC
0100 = LPRC
0011 = FRC
0010 = Primary Oscillator
0001 = Peripheral clock (F_P)
0000 = System clock (F_{OSC})

© 2018-2019 Microchip Technology Inc.

REGISTER 9-10: REFOCONH: REFERENCE CLOCK CONTROL HIGH REGISTER

U-0	R/W-0	R/W-0	R/W-0	R/W-0	R/W-0	R/W-0	R/W-0
—	RODIV[14:8]						
bit 15							bit 8

R/W-0	R/W-0	R/W-0	R/W-0	R/W-0	R/W-0	R/W-0	R/W-0
RODIV[7:0]							
bit 7							bit 0

Legend:			
R = Readable bit	W = Writable bit	U = Unimplemented bit, read as ‘0’	
-n = Value at POR	‘1’ = Bit is set	‘0’ = Bit is cleared	x = Bit is unknown

bit 15 **Unimplemented:** Read as ‘0’

bit 14-0 **RODIV[14:0]:** Reference Clock Integer Divider Select bits

Divider for the selected input clock source is two times the selected value.

`111 1111 1111 1111` = Base clock value divided by 65,534 (2 * 7FFFh)
`111 1111 1111 1110` = Base clock value divided by 65,532 (2 * 7FFEh)
`111 1111 1111 1101` = Base clock value divided by 65,530 (2 * 7FFDh)
. . .
`000 0000 0000 0010` = Base clock value divided by 4 (2 * 2)
`000 0000 0000 0001` = Base clock value divided by 2 (2 * 1)
`000 0000 0000 0000` = Base clock value

REGISTER 9-11: REFOTRIM: REFERENCE OSCILLATOR TRIM REGISTER

R/W-0	R/W-0	R/W-0	R/W-0	R/W-0	R/W-0	R/W-0	R/W-0
ROTRIM[8:1]							
bit 15							bit 8

R/W-0	U-0	U-0	U-0	U-0	U-0	U-0	U-0
ROTRIM0	—	—	—	—	—	—	—
bit 7							bit 0

Legend:			
R = Readable bit	W = Writable bit	U = Unimplemented bit, read as ‘0’	
-n = Value at POR	‘1’ = Bit is set	‘0’ = Bit is cleared	x = Bit is unknown

bit 15-7 **ROTRIM[8:0]:** REFO Trim bits

These bits provide a fractional additive to the RODIV[14:0] value for the 1/2 period of the REFO clock.

`000000000` = 0/512 (0.0 divisor added to the RODIV[14:0] value)
`000000001` = 1/512 (0.001953125 divisor added to the RODIV[14:0] value)
`000000010` = 2/512 (0.00390625 divisor added to the RODIV[14:0] value)
. . .
`100000000` = 256/512 (0.5000 divisor added to the RODIV[14:0] value)
. . .
`111111110` = 510/512 (0.99609375 divisor added to the RODIV[14:0] value)
`111111111` = 511/512 (0.998046875 divisor added to the RODIV[14:0] value)

bit 6-0 **Unimplemented:** Read as ‘0’

NOTES:

© 2018-2019 Microchip Technology Inc.

10.0 DIRECT MEMORY ACCESS (DMA) CONTROLLER

Note 1: This data sheet summarizes the features of the dsPIC33CK64MP105 family of devices. It is not intended to be a comprehensive reference source. For more information, refer to **"Direct Memory Access Controller (DMA)"** (www.microchip.com/DS30009742) in the *"dsPIC33/PIC24 Family Reference Manual"*.

The Direct Memory Access (DMA) Controller is designed to service high data throughput peripherals operating on the SFR bus, allowing them to access data memory directly and alleviating the need for CPU-intensive management. By allowing these data-intensive peripherals to share their own data path, the main data bus is also deloaded, resulting in additional power savings.

The DMA Controller functions both as a peripheral and a direct extension of the CPU. It is located on the microcontroller data bus, between the CPU and DMA-enabled peripherals, with direct access to SRAM. This partitions the SFR bus into two buses, allowing the DMA Controller access to the DMA-capable peripherals located on the new DMA SFR bus. The controller serves as a Master device on the DMA SFR bus, controlling data flow from DMA-capable peripherals.

The controller also monitors CPU instruction processing directly, allowing it to be aware of when the CPU requires access to peripherals on the DMA bus and automatically relinquishing control to the CPU as needed. This increases the effective bandwidth for handling data without DMA operations, causing a processor Stall. This makes the controller essentially transparent to the user.

The DMA Controller has these features:

- Four Independently Programmable Channels
- Concurrent Operation with the CPU (no DMA caused Wait states)
- DMA Bus Arbitration
- Five Programmable Address modes
- Four Programmable Transfer modes
- Four Flexible Internal Data Transfer modes
- Byte or Word Support for Data Transfer
- 16-Bit Source and Destination Address Register for each Channel, Dynamically Updated and Reloadable
- 16-Bit Transaction Count Register, Dynamically Updated and Reloadable
- Upper and Lower Address Limit Registers
- Counter Half-Full Level Interrupt
- Software Triggered Transfer
- Null Write mode for Symmetric Buffer Operations

A simplified block diagram of the DMA Controller is shown if Figure 10-1.

FIGURE 10-1: DMA FUNCTIONAL BLOCK DIAGRAM

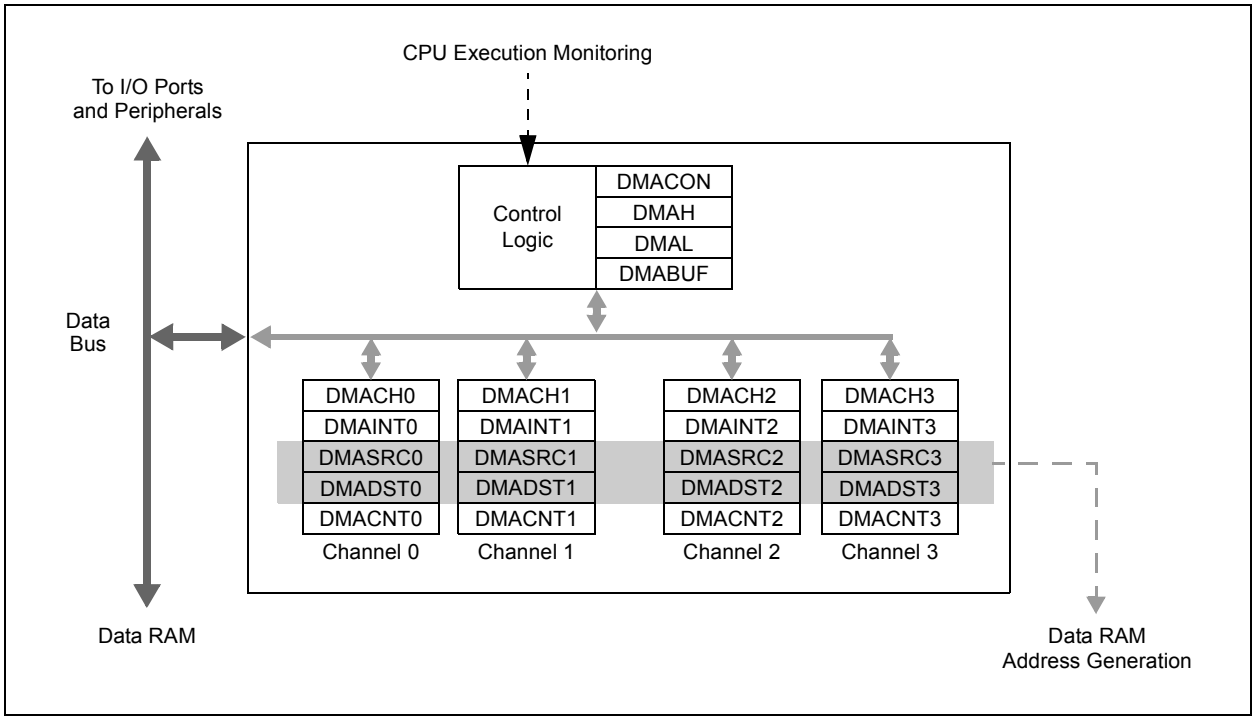

© 2018-2019 Microchip Technology Inc.

10.1 Summary of DMA Operations

The DMA Controller is capable of moving data between addresses according to a number of different parameters. Each of these parameters can be independently configured for any transaction. In addition, any or all of the DMA channels can independently perform a different transaction at the same time. Transactions are classified by these parameters:

- Source and destination (SFRs and data RAM)
- Data size (byte or word)
- Trigger source
- Transfer mode (One-Shot, Repeated or Continuous)
- Addressing modes (Fixed Address or Address Blocks with or without Address Increment/Decrement)

In addition, the DMA Controller provides channel priority arbitration for all channels.

10.1.1 SOURCE AND DESTINATION

Using the DMA Controller, data may be moved between any two addresses in the Data Space. The SFR space (0000h to 0FFFh) or the data RAM space (1000h to 2FFFh) can serve as either the source or the destination. Data can be moved between these areas in either direction or between addresses in either area. The four different combinations are shown in Figure 10-2.

If it is necessary to protect areas of data RAM, the DMA Controller allows the user to set upper and lower address boundaries for operations in the Data Space above the SFR space. The boundaries are set by the DMAH and DMAL Limit registers. If a DMA channel attempts an operation outside of the address boundaries, the transaction is terminated and an interrupt is generated.

10.1.2 DATA SIZE

The DMA Controller can handle both 8-bit and 16-bit transactions. Size is user-selectable using the SIZE bit (DMACHn[1]). By default, each channel is configured for word-size transactions. When byte-size transactions are chosen, the LSB of the source and/or destination address determines if the data represents the upper or lower byte of the data RAM location.

10.1.3 TRIGGER SOURCE

The DMA Controller can use 82 of the device's interrupt sources to initiate a transaction. The DMA trigger sources occur in reverse order from their natural interrupt priority and are shown in Table 10-1.

Since the source and destination addresses for any transaction can be programmed independently of the trigger source, the DMA Controller can use any trigger to perform an operation on any peripheral. This also allows DMA channels to be cascaded to perform more complex transfer operations.

10.1.4 TRANSFER MODE

The DMA Controller supports four types of data transfers, based on the volume of data to be moved for each trigger.

- One-Shot: A single transaction occurs for each trigger.
- Continuous: A series of back-to-back transactions occur for each trigger; the number of transactions is determined by the DMACNTn transaction counter.
- Repeated One-Shot: A single transaction is performed repeatedly, once per trigger, until the DMA channel is disabled.
- Repeated Continuous: A series of transactions are performed repeatedly, one cycle per trigger, until the DMA channel is disabled.

All transfer modes allow the option to have the source and destination addresses, and counter value, automatically reloaded after the completion of a transaction.

10.1.5 ADDRESSING MODES

The DMA Controller also supports transfers between single addresses or address ranges. The four basic options are:

- Fixed-to-Fixed: Between two constant addresses
- Fixed-to-Block: From a constant source address to a range of destination addresses
- Block-to-Fixed: From a range of source addresses to a single, constant destination address
- Block-to-Block: From a range of source addresses to a range of destination addresses

The option to select auto-increment or auto-decrement of source and/or destination addresses is available for Block Addressing modes.

FIGURE 10-2: TYPES OF DMA DATA TRANSFERS

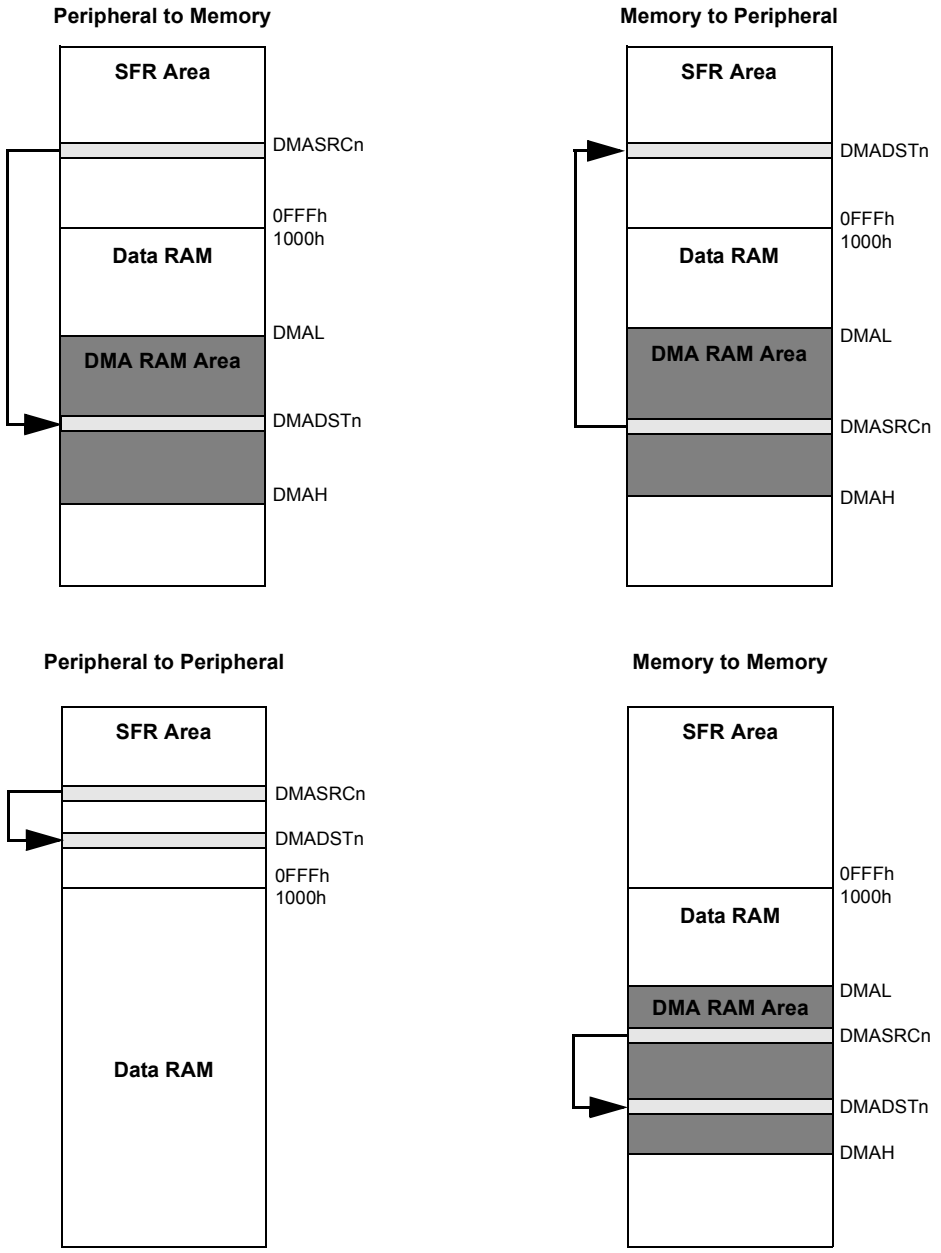

Note: Relative sizes of memory areas are not shown to scale.

© 2018-2019 Microchip Technology Inc.

10.1.6 CHANNEL PRIORITY

Each DMA channel functions independently of the others, but also competes with the others for access to the data and DMA buses. When access collisions occur, the DMA Controller arbitrates between the channels using a user-selectable priority scheme. Two schemes are available:

- Round Robin: When two or more channels collide, the lower numbered channel receives priority on the first collision. On subsequent collisions, the higher numbered channels each receive priority based on their channel number.
- Fixed: When two or more channels collide, the lowest numbered channel always receives priority, regardless of past history; however, any channel being actively processed is not available for an immediate retrigger. If a higher priority channel is continually requesting service, it will be scheduled for service after the next lower priority channel with a pending request.

10.2 Typical Setup

To set up a DMA channel for a basic data transfer:

1. Enable the DMA Controller (DMAEN = `1`) and select an appropriate channel priority scheme by setting or clearing PRSSEL.
2. Program DMAH and DMAL with appropriate upper and lower address boundaries for data RAM operations.
3. Select the DMA channel to be used and disable its operation (CHEN = `0`).
4. Program the appropriate source and destination addresses for the transaction into the channel's DMASRCn and DMADSTn registers.
5. Program the DMACNTn register for the number of triggers per transfer (One-Shot or Continuous modes) or the number of words (bytes) to be transferred (Repeated modes).
6. Set or clear the SIZE bit to select the data size.
7. Program the TRMODE[1:0] bits to select the Data Transfer mode.
8. Program the SAMODE[1:0] and DAMODE[1:0] bits to select the addressing mode.
9. Enable the DMA channel by setting CHEN.
10. Enable the trigger source interrupt.

10.3 Peripheral Module Disable

The channels of the DMA Controller can be individually powered down using the Peripheral Module Disable (PMD) registers.

10.4 Registers

The DMA Controller uses a number of registers to control its operation. The number of registers depends on the number of channels implemented for a particular device.

There are always four module-level registers (one control and three buffer/address):

- DMACON: DMA Engine Control Register (Register 10-1)
- DMAH and DMAL: DMA High and Low Address Limit Registers
- DMABUF: DMA Transfer Data Buffer

Each of the DMA channels implements five registers (two control and three buffer/address):

- DMACHn: DMA Channel n Control Register (Register 10-2)
- DMAINTn: DMA Channel n Interrupt Register (Register 10-3)
- DMASRCn: DMA Data Source Address Pointer for Channel n Register
- DMADSTn: DMA Data Destination Source for Channel n Register
- DMACNTn: DMA Transaction Counter for Channel n Register

For dsPIC33CK64MP105 devices, there are a total of 34 registers.

REGISTER 10-1: DMACON: DMA ENGINE CONTROL REGISTER

R/W-0	U-0	U-0	U-0	U-0	U-0	U-0	U-0
DMAEN	—	—	—	—	—	—	—
bit 15							bit 8

U-0	U-0	U-0	U-0	U-0	U-0	U-0	R/W-0
—	—	—	—	—	—	—	PRSSEL
bit 7							bit 0

Legend:			
R = Readable bit	W = Writable bit	U = Unimplemented bit, read as ‘0’	
-n = Value at POR	‘1’ = Bit is set	‘0’ = Bit is cleared	x = Bit is unknown

bit 15 **DMAEN:** DMA Module Enable bit
1 = Enables module
0 = Disables module and terminates all active DMA operation(s)

bit 14-1 **Unimplemented:** Read as ‘0’

bit 0 **PRSSEL:** Channel Priority Scheme Selection bit
1 = Round robin scheme
0 = Fixed priority scheme

© 2018-2019 Microchip Technology Inc.

REGISTER 10-2: DMACHn: DMA CHANNEL n CONTROL REGISTER

U-0	U-0	U-0	r-0	R/W-0	R/W-0	R/W-0	R/W-0
—	—	—	—	—	NULLW	RELOAD(1)	CHREQ(3)
bit 15							bit 8

R/W-0	R/W-0	R/W-0	R/W-0	R/W-0	R/W-0	R/W-0	R/W-0
SAMODE1	SAMODE0	DAMODE1	DAMODE0	TRMODE1	TRMODE0	SIZE	CHEN
bit 7							bit 0

Legend:	r = Reserved bit		
R = Readable bit	W = Writable bit	U = Unimplemented bit, read as ‘0’	
-n = Value at POR	‘1’ = Bit is set	‘0’ = Bit is cleared	x = Bit is unknown

bit 15-13 **Unimplemented:** Read as ‘0’

bit 12 **Reserved:** Maintain as ‘0’

bit 11 **Unimplemented:** Read as ‘0’

bit 10 **NULLW:** Null Write Mode bit
1 = A dummy write is initiated to DMASRCn for every write to DMADSTn
0 = No dummy write is initiated

bit 9 **RELOAD:** Address and Count Reload bit(1)
1 = DMASRCn, DMADSTn and DMACNTn registers are reloaded to their previous values upon the start of the next operation
0 = DMASRCn, DMADSTn and DMACNTn are not reloaded on the start of the next operation(2)

bit 8 **CHREQ:** DMA Channel Software Request bit(3)
1 = A DMA request is initiated by software; automatically cleared upon completion of a DMA transfer
0 = No DMA request is pending

bit 7-6 **SAMODE[1:0]:** Source Address Mode Selection bits
11 = Reserved
10 = DMASRCn is decremented based on the SIZE bit after a transfer completion
01 = DMASRCn is incremented based on the SIZE bit after a transfer completion
00 = DMASRCn remains unchanged after a transfer completion

bit 5-4 **DAMODE[1:0]:** Destination Address Mode Selection bits
11 = Reserved
10 = DMADSTn is decremented based on the SIZE bit after a transfer completion
01 = DMADSTn is incremented based on the SIZE bit after a transfer completion
00 = DMADSTn remains unchanged after a transfer completion

bit 3-2 **TRMODE[1:0]:** Transfer Mode Selection bits
11 = Repeated Continuous
10 = Continuous
01 = Repeated One-Shot
00 = One-Shot

bit 1 **SIZE:** Data Size Selection bit
1 = Byte (8-bit)
0 = Word (16-bit)

bit 0 **CHEN:** DMA Channel Enable bit
1 = The corresponding channel is enabled
0 = The corresponding channel is disabled

Note 1: Only the original DMACNTn is required to be stored to recover the original DMASRCn and DMADSTn values.
2: DMACNTn will always be reloaded in Repeated mode transfers, regardless of the state of the RELOAD bit.
3: The number of transfers executed while CHREQ is set depends on the configuration of TRMODE[1:0].

REGISTER 10-3: DMAINTn: DMA CHANNEL n INTERRUPT REGISTER

R-0	R/W-0	R/W-0	R/W-0	R/W-0	R/W-0	R/W-0	R/W-0
DBUFWF(1)	CHSEL6	CHSEL5	CHSEL4	CHSEL3	CHSEL2	CHSEL1	CHSEL0
bit 15							bit 8

R/W-0	R/W-0	R/W-0	R/W-0	R/W-0	U-0	U-0	R/W-0
HIGHIF(1,2)	LOWIF(1,2)	DONEIF(1)	HALFIF(1)	OVRUNIF(1)	—	—	HALFEN
bit 7							bit 0

Legend:			
R = Readable bit	W = Writable bit	U = Unimplemented bit, read as ‘0’	
-n = Value at POR	‘1’ = Bit is set	‘0’ = Bit is cleared	x = Bit is unknown

bit 15 **DBUFWF:** DMA Buffered Data Write Flag bit(1)
- 1 = The content of the DMA buffer has not been written to the location specified in DMADSTn or DMASRCn in Null Write mode
- 0 = The content of the DMA buffer has been written to the location specified in DMADSTn or DMASRCn in Null Write mode

bit 14-8 **CHSEL[6:0]:** DMA Channel Trigger Selection bits
See Table 10-1 for a complete list.

bit 7 **HIGHIF:** DMA High Address Limit Interrupt Flag bit(1,2)
- 1 = The DMA channel has attempted to access an address higher than DMAH or the upper limit of the data RAM space
- 0 = The DMA channel has not invoked the high address limit interrupt

bit 6 **LOWIF:** DMA Low Address Limit Interrupt Flag bit(1,2)
- 1 = The DMA channel has attempted to access the DMA SFR address lower than DMAL, but above the SFR range (07FFh)
- 0 = The DMA channel has not invoked the low address limit interrupt

bit 5 **DONEIF:** DMA Complete Operation Interrupt Flag bit(1)

If CHEN = 1:
- 1 = The previous DMA session has ended with completion
- 0 = The current DMA session has not yet completed

If CHEN = 0:
- 1 = The previous DMA session has ended with completion
- 0 = The previous DMA session has ended without completion

bit 4 **HALFIF:** DMA 50% Watermark Level Interrupt Flag bit(1)
- 1 = DMACNTn has reached the halfway point to 0000h
- 0 = DMACNTn has not reached the halfway point

bit 3 **OVRUNIF:** DMA Channel Overrun Flag bit(1)
- 1 = The DMA channel is triggered while it is still completing the operation based on the previous trigger
- 0 = The overrun condition has not occurred

bit 2-1 **Unimplemented:** Read as ‘0’

bit 0 **HALFEN:** Halfway Completion Watermark bit
- 1 = Interrupts are invoked when DMACNTn has reached its halfway point and at completion
- 0 = An interrupt is invoked only at the completion of the transfer

Note 1: Setting these flags in software does not generate an interrupt.

2: Testing for address limit violations (DMASRCn or DMADSTn is either greater than DMAH or less than DMAL) is NOT done before the actual access.

© 2018-2019 Microchip Technology Inc.

TABLE 10-1: DMA CHANNEL TRIGGER SOURCES

CHSEL[6:0]		Trigger (Interrupt)	CHSEL[6:0]		Trigger (Interrupt)	CHSEL[6:0]		Trigger (Interrupt)
0	00h	INT0 – External Interrupt 0	33	21h	(Reserved, do not use)	66	42h	AD1FLTR3 – Oversample Filter 3
1	01h	SCCP1 Interrupt	34	22h		67	43h	AD1FLTR4 – Oversample Filter 4
2	02h	SPI1 Receiver	35	23h		68	44h	CLC1 Positive Edge Interrupt
3	03h	SPI1 Transmitter	36	24h	PWM Event C	69	45h	CLC2 Positive Edge Interrupt
4	04h	UART1 Receiver	37	25h	SENT1 TX/RX	70	46h	SPI1 – Fault Interrupt
5	05h	UART1 Transmitter	38	26h	SENT2 TX/RX	71	47h	SPI2 – Fault Interrupt
6	06h	ECC Single-Bit Error	39	27h	ADC Common Interrupt	72	48h	(Reserved, do not use)
7	07h	NVM Write Complete	40	28h	ADC Done AN0	. . .	. . .	
8	08h	INT1 – External Interrupt 1	41	29h	ADC Done AN1	86	56h	
9	09h	SI2C1 – I2C1 Slave Event	42	2Ah	ADC Done AN2	87	57h	PWM Event D
10	0Ah	MI2C1 – I2C1 Master Event	43	2Bh	ADC Done AN3	88	58h	PWM Event E
11	0Bh	INT2 – External Interrupt 2	44	2Ch	ADC Done AN4	89	59h	PWM Event F
12	0Ch	SCCP2 Interrupt	45	2Dh	ADC Done AN5	90	5Ah	(Reserved, do not use)
13	0Dh	INT3 – External Interrupt 3	46	2Eh	ADC Done AN6	91	5Bh	
14	0Eh	UART2 Receiver	47	2Fh	ADC Done AN7	92	5Ch	
15	0Fh	UART2 Transmitter	48	30h	ADC Done AN8	93	5Dh	
16	10h	SPI2 Receiver	49	31h	ADC Done AN9	94	5Eh	
17	11h	SPI2 Transmitter	50	32h	ADC Done AN10	95	5Fh	
18	12h	SCCP3 Interrupt	51	33h	ADC Done AN11	96	60h	CLC3 Positive Edge Interrupt
19	13h	SI2C2 – I2C2 Slave Event	52	34h	ADC Done AN12	97	61h	CLC4 Positive Edge Interrupt
20	14h	MI2C2 – I2C2 Master Event	53	35h	ADC Done AN13	98	62h	SPI3 Receiver
21	15h	SCCP4 Interrupt	54	36h	ADC Done AN14	99	63h	SPI3 Transmitter
22	16h	MCCP5 Interrupt	55	37h	ADC Done AN15	100	64h	SI2C3 – I2C3 Slave Event
23	17h	(Reserved, do not use)	56	38h	ADC Done AN16	101	65h	MI2C3 – I2C3 Master Event
24	18h	CRC Generator Interrupt	57	39h	ADC Done AN17	102	66h	SPI3 Fault
25	19h	PWM Event A	58	3Ah	ADC Done AN18	103	67h	MCCP9
26	1Ah	(Reserved, do not use)	59	3Bh	ADC Done AN19	104	68h	UART3 Receiver
27	1Bh	PWM Event B	60	3Ch	ADC Done AN20	105	69h	UART3 Transmitter
28	1Ch	PWM Generator 1	61	3Dh	(Reserved, do not use)	106	6Ah	(Reserved, do not use)
29	1Dh	PWM Generator 2	62	3Eh		. . .	. . .	
30	1Eh	PWM Generator 3	63	3Fh		127	7Fh	
31	1Fh	PWM Generator 4	64	40h	AD1FLTR1 – Oversample Filter 1			
32	20h	(Reserved, do not use)	65	41h	AD1FLTR2 – Oversample Filter 2			

NOTES:

© 2018-2019 Microchip Technology Inc.

11.0 HIGH-RESOLUTION PWM WITH FINE EDGE PLACEMENT

Note 1: This data sheet summarizes the features of the dsPIC33CK64MP105 family of devices. It is not intended to be a comprehensive reference source. To complement the information in this data sheet, refer to **"High-Resolution PWM with Fine Edge Placement"** (www.microchip.com/DS70005320) in the *"dsPIC33/PIC24 Family Reference Manual"*.

The High-Speed PWM (HSPWM) module is a Pulse-Width Modulated (PWM) module to support both motor control and power supply applications. This flexible module provides features to support many types of Motor Control (MC) and Power Control (PC) applications, including:

- AC-to-DC Converters
- DC-to-DC Converters
- AC and DC Motors: BLDC, PMSM, ACIM, SRM, etc.
- Inverters
- Battery Chargers
- Digital Lighting
- Power Factor Correction (PFC)

11.1 Features

- Four Independent PWM Generators, each with Dual Outputs
- Operating modes:
  - Independent Edge mode
  - Variable Phase PWM mode
  - Center-Aligned mode
  - Double Update Center-Aligned mode
  - Dual Edge Center-Aligned mode
  - Dual PWM mode
- Output modes:
  - Complementary
  - Independent
  - Push-Pull
- Dead-Time Generator
- Leading-Edge Blanking (LEB)
- Output Override for Fault Handling
- Flexible Period/Duty Cycle Updating Options
- Programmable Control Inputs (PCI)
- Advanced Triggering Options
- Six Combinatorial Logic Outputs
- Six PWM Event Outputs

11.2 Architecture Overview

The PWM module consists of a common set of controls and features, and multiple instantiations of PWM Generators (PGs). Each PWM Generator can be independently configured or multiple PWM Generators can be used to achieve complex multiphase systems. PWM Generators can also be used to implement sophisticated triggering, protection and logic functions. A high-level block diagram is shown in Figure 11-1.

FIGURE 11-1: PWM HIGH-LEVEL BLOCK DIAGRAM

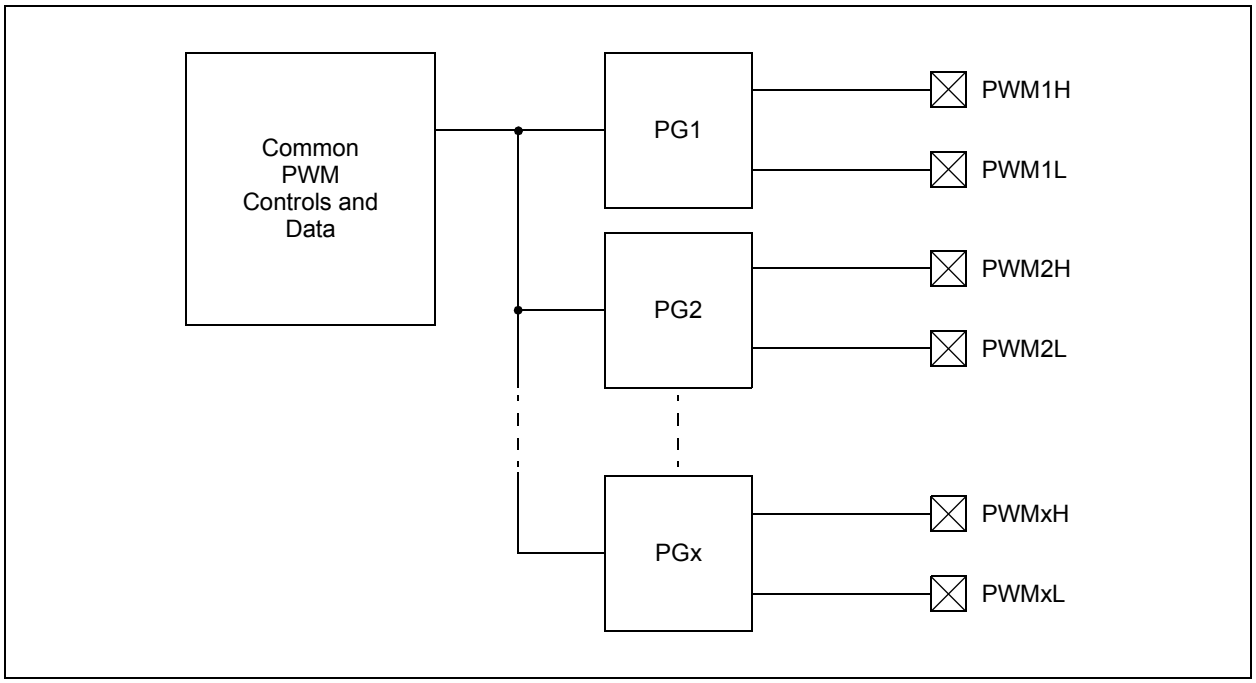

11.3 PWM4H Output on PPS

All devices support the capability to output a PWM4H signal via PPS on to any “RPn” pin. This feature is intended for lower pin count devices that do not have PWM4H on a dedicated pin. If PWM4H PPS output functions are used on 48-pin devices that also have a fixed RP65/PWM4H/RD1 pin, the output signal will be present on both the dedicated and “RPn” pins. The PWM4L/H Output Port Enable bits, PENH and PENL (PG4IOCONH[3:2]), control both dedicated and PPS pins together; it is not possible to disable the dedicated pin and use only PPS.

Given the natural priority of the “RPn” functions above that of the PWM, it is possible to use the PPS output functions on the dedicated RP65/PWM4H/RD1 pin while the PWM4H signal is routed to other pins via PPS.

11.4 Write Restrictions

The LOCK bit (PCLKCON[8]) may be set in software to block writes to certain registers. For more information, refer to **“High-Resolution PWM with Fine Edge Placement”** (www.microchip.com/DS70005320) in the *“dsPIC33/PIC24 Family Reference Manual”*.

The following lock/unlock sequence is required to set or clear the LOCK bit:

1. Write 0x55 to NVMKEY.
2. Write 0xAA to NVMKEY.
3. Clear (or set) the LOCK bit (PCLKCON[8]) as a single operation.

In general, modifications to configuration controls should not be done while the module is running, as indicated by the ON bit (PGxCONL[15]) being set.

© 2018-2019 Microchip Technology Inc.

11.5 Control Registers

There are two categories of Special Function Registers (SFRs) used to control the operation of the PWM module:

- Common, shared by all PWM Generators
- PWM Generator-specific

An ‘x’ in the register name denotes an instance of a PWM Generator.

A ‘y’ in the register name denotes an instance of the common function.

REGISTER 11-1: PCLKCON: PWM CLOCK CONTROL REGISTER

R/W-0	R/W-0	U-0	U-0	U-0	U-0	U-0	R/W-0
HRRDY	HRERR	—	—	—	—	—	LOCK(1)
bit 15							bit 8

U-0	U-0	R/W-0	R/W-0	U-0	U-0	R/W-0	R/W-0
—	—	DIVSEL1	DIVSEL0	—	—	MCLKSEL1(2,3)	MCLKSEL0(2,3)
bit 7							bit 0

Legend:			
R = Readable bit	W = Writable bit	U = Unimplemented bit, read as ‘0’	
-n = Value at POR	‘1’ = Bit is set	‘0’ = Bit is cleared	x = Bit is unknown

bit 15 **HRRDY:** High-Resolution Ready bit
1 = The high-resolution circuitry is ready
0 = The high-resolution circuitry is not ready

bit 14 **HRERR:** High-Resolution Error bit
1 = An error has occurred; PWM signals will have limited resolution
0 = No error has occurred; PWM signals will have full resolution when HRRDY = 1

bit 13-9 **Unimplemented:** Read as ‘0’

bit 8 **LOCK:** Lock bit(1)
1 = Write-protected registers and bits are locked
0 = Write-protected registers and bits are unlocked

bit 7-6 **Unimplemented:** Read as ‘0’

bit 5-4 **DIVSEL[1:0]:** PWM Clock Divider Selection bits
11 = Divide ratio is 1:16
10 = Divide ratio is 1:8
01 = Divide ratio is 1:4
00 = Divide ratio is 1:2

bit 3-2 **Unimplemented:** Read as ‘0’

bit 1-0 **MCLKSEL[1:0]:** PWM Master Clock Selection bits(2,3)
11 = AF_{PLLO} – Auxiliary PLL post-divider output
10 = F_{PLLO} – Primary PLL post-divider output
01 = $AF_{VCO}/2$ – Auxiliary VCO/2
00 = F_{OSC}

Note 1: The LOCK bit is protected against an accidental write. To set this bit, 0x55 and 0xAA values must be written sequentially into the NVMKEY register (see **Section 11.4 “Write Restrictions”**).

2: Changing the MCLKSEL[1:0] bits while ON (PGxCONL[15]) = 1 is not recommended.

3: The PWM input clock frequency selected by the MCLKSEL[1:0] bits must not exceed 500 MHz in Normal Resolution mode and must be 500 MHz for the High-Resolution mode.

REGISTER 11-2: FSCL: FREQUENCY SCALE REGISTER

R/W-0	R/W-0	R/W-0	R/W-0	R/W-0	R/W-0	R/W-0	R/W-0
FSCL[15:8]							
bit 15							bit 8

R/W-0	R/W-0	R/W-0	R/W-0	R/W-0	R/W-0	R/W-0	R/W-0
FSCL[7:0]							
bit 7							bit 0

Legend:			
R = Readable bit	W = Writable bit	U = Unimplemented bit, read as ‘0’	
-n = Value at POR	‘1’ = Bit is set	‘0’ = Bit is cleared	x = Bit is unknown

bit 15-0 **FSCL[15:0]:** Frequency Scale Register bits
The value in this register is added to the frequency scaling accumulator at each PWM clock. When the accumulated value exceeds the value of FSMINPER, a clock pulse is produced.

REGISTER 11-3: FSMINPER: FREQUENCY SCALING MINIMUM PERIOD REGISTER

R/W-0	R/W-0	R/W-0	R/W-0	R/W-0	R/W-0	R/W-0	R/W-0
FSMINPER[15:8]							
bit 15							bit 8

R/W-0	R/W-0	R/W-0	R/W-0	R/W-0	R/W-0	R/W-0	R/W-0
FSMINPER[7:0]							
bit 7							bit 0

Legend:			
R = Readable bit	W = Writable bit	U = Unimplemented bit, read as ‘0’	
-n = Value at POR	‘1’ = Bit is set	‘0’ = Bit is cleared	x = Bit is unknown

bit 15-0 **FSMINPER[15:0]:** Frequency Scaling Minimum Period Register bits
This register holds the minimum clock period (maximum clock frequency) that can be produced by the frequency scaling circuit.

© 2018-2019 Microchip Technology Inc.

REGISTER 11-4: MPHASE: MASTER PHASE REGISTER

R/W-0	R/W-0	R/W-0	R/W-0	R/W-0	R/W-0	R/W-0	R/W-0
MPHASE[15:8]							
bit 15							bit 8

R/W-0	R/W-0	R/W-0	R/W-0	R/W-0	R/W-0	R/W-0	R/W-0
MPHASE[7:0]							
bit 7							bit 0

Legend:			
R = Readable bit	W = Writable bit	U = Unimplemented bit, read as ‘0’	
-n = Value at POR	‘1’ = Bit is set	‘0’ = Bit is cleared	x = Bit is unknown

bit 15-0 **MPHASE[15:0]:** Master Phase Register bits
This register holds the phase offset value that can be shared by multiple PWM Generators.

REGISTER 11-5: MDC: MASTER DUTY CYCLE REGISTER

R/W-0	R/W-0	R/W-0	R/W-0	R/W-0	R/W-0	R/W-0	R/W-0
MDC[15:8](1)							
bit 15							bit 8

R/W-0	R/W-0	R/W-0	R/W-0	R/W-0	R/W-0	R/W-0	R/W-0
MDC[7:0](1)							
bit 7							bit 0

Legend:			
R = Readable bit	W = Writable bit	U = Unimplemented bit, read as ‘0’	
-n = Value at POR	‘1’ = Bit is set	‘0’ = Bit is cleared	x = Bit is unknown

bit 15-0 **MDC[15:0]:** Master Duty Cycle Register bits(1)
This register holds the duty cycle value that can be shared by multiple PWM Generators.

Note 1: Duty cycle values less than ‘`0x0008`’ should not be used (‘`0x0020`’ in High-Resolution mode).

REGISTER 11-6: MPER: MASTER PERIOD REGISTER

R/W-0	R/W-0	R/W-0	R/W-0	R/W-0	R/W-0	R/W-0	R/W-0
MPER[15:8][1]							
bit 15							bit 8

R/W-0	R/W-0	R/W-0	R/W-0	R/W-0	R/W-0	R/W-0	R/W-0
MPER[7:0][1]							
bit 7							bit 0

Legend:			
R = Readable bit	W = Writable bit	U = Unimplemented bit, read as ‘0’	
-n = Value at POR	‘1’ = Bit is set	‘0’ = Bit is cleared	x = Bit is unknown

bit 15-0 **MPER[15:0]:** Master Period Register bits[1]
This register holds the period value that can be shared by multiple PWM Generators.

Note 1: Period values less than ‘`0x0010`’ should not be used (‘`0x0080`’ in High-Resolution mode).

© 2018-2019 Microchip Technology Inc.

REGISTER 11-7: CMBTRIGL: COMBINATIONAL TRIGGER REGISTER LOW

U-0	U-0	U-0	U-0	U-0	U-0	U-0	U-0
—	—	—	—	—	—	—	—
bit 15							bit 8

U-0	U-0	U-0	U-0	R/W-0	R/W-0	R/W-0	R/W-0
—	—	—	—	CTA4EN	CTA3EN	CTA2EN	CTA1EN
bit 7							bit 0

Legend:			
R = Readable bit	W = Writable bit	U = Unimplemented bit, read as ‘0’	
-n = Value at POR	‘1’ = Bit is set	‘0’ = Bit is cleared	x = Bit is unknown

bit 15-4 **Unimplemented:** Read as ‘0’

bit 3 **CTA4EN:** Enable Trigger Output from PWM Generator #4 as Source for Combinational Trigger A bit
1 = Enables specified trigger signal to be OR’d into the Combinatorial Trigger A signal
0 = Disabled

bit 2 **CTA3EN:** Enable Trigger Output from PWM Generator #3 as Source for Combinational Trigger A bit
1 = Enables specified trigger signal to be OR’d into the Combinatorial Trigger A signal
0 = Disabled

bit 1 **CTA2EN:** Enable Trigger Output from PWM Generator #2 as Source for Combinational Trigger A bit
1 = Enables specified trigger signal to be OR’d into the Combinatorial Trigger A signal
0 = Disabled

bit 0 **CTA1EN:** Enable Trigger Output from PWM Generator #1 as Source for Combinational Trigger A bit
1 = Enables specified trigger signal to be OR’d into the Combinatorial Trigger A signal
0 = Disabled

REGISTER 11-8: CMBTRIGH: COMBINATIONAL TRIGGER REGISTER HIGH

U-0	U-0	U-0	U-0	U-0	U-0	U-0	U-0
—	—	—	—	—	—	—	—
bit 15							bit 8

U-0	U-0	U-0	U-0	R/W-0	R/W-0	R/W-0	R/W-0
—	—	—	—	CTB4EN	CTB3EN	CTB2EN	CTB1EN
bit 7							bit 0

Legend:			
R = Readable bit	W = Writable bit	U = Unimplemented bit, read as ‘0’	
-n = Value at POR	‘1’ = Bit is set	‘0’ = Bit is cleared	x = Bit is unknown

bit 15-4 **Unimplemented:** Read as ‘0’

bit 3 **CTB4EN:** Enable Trigger Output from PWM Generator #4 as Source for Combinational Trigger B bit
1 = Enables specified trigger signal to be OR’d into the Combinatorial Trigger B signal
0 = Disabled

bit 2 **CTB3EN:** Enable Trigger Output from PWM Generator #3 as Source for Combinational Trigger B bit
1 = Enables specified trigger signal to be OR’d into the Combinatorial Trigger B signal
0 = Disabled

bit 1 **CTB2EN:** Enable Trigger Output from PWM Generator #2 as Source for Combinational Trigger B bit
1 = Enables specified trigger signal to be OR’d into the Combinatorial Trigger B signal
0 = Disabled

bit 0 **CTB1EN:** Enable Trigger Output from PWM Generator #1 as Source for Combinational Trigger B bit
1 = Enables specified trigger signal to be OR’d into the Combinatorial Trigger B signal
0 = Disabled

© 2018-2019 Microchip Technology Inc.

REGISTER 11-9: LOGCONy: COMBINATORIAL PWM LOGIC CONTROL REGISTER y[2]

R/W-0	R/W-0	R/W-0	R/W-0	R/W-0	R/W-0	R/W-0	R/W-0
PWMS1y3[1]	PWMS1y2[1]	PWMS1y1[1]	PWMS1y0[1]	PWMS2y3[1]	PWMS2y2[1]	PWMS2y1[1]	PWMS2y0[1]
bit 15							bit 8

R/W-0	R/W-0	R/W-0	R/W-0	U-0	R/W-0	R/W-0	R/W-0
S1yPOL	S2yPOL	PWMLFy1	PWMLFy0	—	PWMLFyD2[3]	PWMLFyD1[3]	PWMLFyD0[3]
bit 7							bit 0

Legend:			
R = Readable bit	W = Writable bit	U = Unimplemented bit, read as ‘0’	
-n = Value at POR	‘1’ = Bit is set	‘0’ = Bit is cleared	x = Bit is unknown

bit 15-12 **PWMS1y[3:0]:** Combinatorial PWM Logic Source #1 Selection bits[1]
1111-1000 = Reserved
0111 = PWM4L
0110 = PWM4H
0101 = PWM3L
0100 = PWM3H
0011 = PWM2L
0010 = PWM2H
0001 = PWM1L
0000 = PWM1H

bit 11-8 **PWMS2y[3:0]:** Combinatorial PWM Logic Source #2 Selection bits[1]
1111-1000 = Reserved
0111 = PWM4L
0110 = PWM4H
0101 = PWM3L
0100 = PWM3H
0011 = PWM2L
0010 = PWM2H
0001 = PWM1L
0000 = PWM1H

bit 7 **S1yPOL:** Combinatorial PWM Logic Source #1 Polarity bit
1 = Input is inverted
0 = Input is positive logic

bit 6 **S2yPOL:** Combinatorial PWM Logic Source #2 Polarity bit
1 = Input is inverted
0 = Input is positive logic

bit 5-4 **PWMLFy[1:0]:** Combinatorial PWM Logic Function Selection bits
11 = Reserved
10 = PWMS1y ^ PWMS2y (XOR)
01 = PWMS1y & PWMS2y (AND)
00 = PWMS1y | PWMS2y (OR)

bit 3 **Unimplemented:** Read as ‘0’

Note 1: Logic function input will be connected to ‘0’ if the PWM channel is not present.
2: ‘y’ denotes a common instance (A-F).
3: Instances of y = A, C, E of LOGCONy assign logic function output to the PWMxH pin. Instances of y = B, D, F of LOGCONy assign logic function to the PWMxL pin.

REGISTER 11-9: LOGCONy: COMBINATORIAL PWM LOGIC CONTROL REGISTER y(2) (CONTINUED)

bit 2-0 **PWMLFyD[2:0]:** Combinatorial PWM Logic Destination Selection bits(3)

`111-100` = Reserved
`011` = Logic function is assigned to PWM4H or PWM4L pin
`010` = Logic function is assigned to PWM3H or PWM3L pin
`001` = Logic function is assigned to PWM2H or PWM2L pin
`000` = No assignment, combinatorial PWM logic function is disabled

Note 1: Logic function input will be connected to '`0`' if the PWM channel is not present.

2: 'y' denotes a common instance (A-F).

3: Instances of y = A, C, E of LOGCONy assign logic function output to the PWMxH pin. Instances of y = B, D, F of LOGCONy assign logic function to the PWMxL pin.

© 2018-2019 Microchip Technology Inc.

REGISTER 11-10: PWMEVTy: PWM EVENT OUTPUT CONTROL REGISTER y[5]

R/W-0	R/W-0	R/W-0	R/W-0	U-0	U-0	U-0	U-0
EVTyOEN	EVTyPOL	EVTySTRD	EVTySYNC	—	—	—	—
bit 15							bit 8

R/W-0	R/W-0	R/W-0	R/W-0	U-0	R/W-0	R/W-0	R/W-0
EVTySEL3	EVTySEL2	EVTySEL1	EVTySEL0	—	EVTyPGS2[2]	EVTyPGS1[2]	EVTyPGS0[2]
bit 7							bit 0

Legend:			
R = Readable bit	W = Writable bit	U = Unimplemented bit, read as ‘0’	
-n = Value at POR	‘1’ = Bit is set	‘0’ = Bit is cleared	x = Bit is unknown

bit 15 **EVTyOEN:** PWM Event Output Enable bit
`1` = Event output signal is output on PWMEy pin
`0` = Event output signal is internal only

bit 14 **EVTyPOL:** PWM Event Output Polarity bit
`1` = Event output signal is active-low
`0` = Event output signal is active-high

bit 13 **EVTySTRD:** PWM Event Output Stretch Disable bit
`1` = Event output signal pulse width is not stretched
`0` = Event output signal is stretched to eight PWM clock cycles minimum[1]

bit 12 **EVTySYNC:** PWM Event Output Sync bit
`1` = Event output signal is synchronized to the system clock
`0` = Event output is not synchronized to the system clock
Event output signal pulse will be two system clocks when this bit is set and EVTySTRD = `1`.

bit 11-8 **Unimplemented:** Read as ‘`0`’

bit 7-4 **EVTySEL[3:0]:** PWM Event Selection bits
`1111` = High-resolution error event signal
`1110-1010` = Reserved
`1001` = ADC Trigger 2 signal
`1000` = ADC Trigger 1 signal
`0111` = STEER signal (available in Push-Pull Output modes only)[4]
`0110` = CAHALF signal (available in Center-Aligned modes only)[4]
`0101` = PCI Fault active output signal
`0100` = PCI Current limit active output signal
`0011` = PCI Feed-forward active output signal
`0010` = PCI Sync active output signal
`0001` = PWM Generator output signal[3]
`0000` = Source is selected by the PGTRGSEL[2:0] bits

bit 3 **Unimplemented:** Read as ‘`0`’

Note 1: The event signal is stretched using peripheral_clk because different PWM Generators may be operating from different clock sources.
2: No event will be produced if the selected PWM Generator is not present.
3: This is the PWM Generator output signal prior to output mode logic and any output override logic.
4: This signal should be the PGx_clk domain signal prior to any synchronization into the system clock domain.
5: ‘y’ denotes a common instance (A-F).

REGISTER 11-10: PWMEVTy: PWM EVENT OUTPUT CONTROL REGISTER y(5) (CONTINUED)

bit 2-0 **EVTyPGS[2:0]:** PWM Event Source Selection bits(2)

111-100 = Reserved
011 = PWM Generator 4
...
000 = PWM Generator 1

Note 1: The event signal is stretched using peripheral_clk because different PWM Generators may be operating from different clock sources.

2: No event will be produced if the selected PWM Generator is not present.

3: This is the PWM Generator output signal prior to output mode logic and any output override logic.

4: This signal should be the PGx_clk domain signal prior to any synchronization into the system clock domain.

5: ‘y’ denotes a common instance (A-F).

© 2018-2019 Microchip Technology Inc.

REGISTER 11-11: LFSR: LINEAR FEEDBACK SHIFT REGISTER

U-0	R/W-0	R/W-0	R/W-0	R/W-0	R/W-0	R/W-0	R/W-0
—	LFSR[14:8]						
bit 15							bit 8

R/W-0	R/W-0	R/W-0	R/W-0	R/W-0	R/W-0	R/W-0	R/W-0
LFSR[7:0]							
bit 7							bit 0

Legend:			
R = Readable bit	W = Writable bit	U = Unimplemented bit, read as ‘0’	
-n = Value at POR	‘1’ = Bit is set	‘0’ = Bit is cleared	x = Bit is unknown

bit 15 **Unimplemented:** Read as ‘0’

bit 14-0 **LFSR[14:0]:** Linear Feedback Shift Register bits
A read of this register will provide a 15-bit pseudorandom value.

REGISTER 11-12: PGxCONL: PWM GENERATOR x CONTROL REGISTER LOW

R/W-0	r-0	U-0	U-0	U-0	R/W-0	R/W-0	R/W-0
ON	—	—	—	—	TRGCNT2	TRGCNT1	TRGCNT0
bit 15							bit 8

R/W-0	U-0	U-0	R/W-0	R/W-0	R/W-0	R/W-0	R/W-0
HREN(2)	—	—	CLKSEL1	CLKSEL0	MODSEL2	MODSEL1	MODSEL0
bit 7							bit 0

Legend:	r = Reserved bit		
R = Readable bit	W = Writable bit	U = Unimplemented bit, read as ‘0’	
-n = Value at POR	‘1’ = Bit is set	‘0’ = Bit is cleared	x = Bit is unknown

bit 15 **ON:** Enable bit
1 = PWM Generator is enabled
0 = PWM Generator is not enabled

bit 14 **Reserved:** Maintain as ‘0’

bit 13-11 **Unimplemented:** Read as ‘0’

bit 10-8 **TRGCNT[2:0]:** Trigger Count Select bits
111 = PWM Generator produces eight PWM cycles after triggered
110 = PWM Generator produces seven PWM cycles after triggered
101 = PWM Generator produces six PWM cycles after triggered
100 = PWM Generator produces five PWM cycles after triggered
011 = PWM Generator produces four PWM cycles after triggered
010 = PWM Generator produces three PWM cycles after triggered
001 = PWM Generator produces two PWM cycles after triggered
000 = PWM Generator produces one PWM cycle after triggered

bit 7 **HREN:** PWM Generator x High-Resolution Enable bit(2)
1 = PWM Generator x operates in High-Resolution mode
0 = PWM Generator x operates in standard resolution

bit 6-5 **Unimplemented:** Read as ‘0’

bit 4-3 **CLKSEL[1:0]:** Clock Selection bits
11 = PWM Generator uses Master clock scaled by frequency scaling circuit(1)
10 = PWM Generator uses Master clock divided by clock divider circuit(1)
01 = PWM Generator uses Master clock selected by the MCLKSEL[1:0] (PCLKCON[1:0]) control bits
00 = No clock selected, PWM Generator is in lowest power state (default)

bit 2-0 **MODSEL[2:0]:** Mode Selection bits
111 = Dual Edge Center-Aligned PWM mode (interrupt/register update twice per cycle)
110 = Dual Edge Center-Aligned PWM mode (interrupt/register update once per cycle)
101 = Double-Update Center-Aligned PWM mode
100 = Center-Aligned PWM mode
011 = Reserved
010 = Independent Edge PWM mode, dual output
001 = Variable Phase PWM mode
000 = Independent Edge PWM mode

Note 1: The PWM Generator time base operates from the frequency scaling circuit clock, effectively scaling the duty cycle and period of the PWM Generator output.

2: Input frequency of 500 MHz must be used for High-Resolution mode.

© 2018-2019 Microchip Technology Inc.

REGISTER 11-13: PGxCONH: PWM GENERATOR x CONTROL REGISTER HIGH

R/W-0	R/W-0	R/W-0	U-0	R/W-0	R/W-0	R/W-0	R/W-0
MDCSEL	MPERSEL	MPHSEL	—	MSTEN	UPDMOD2	UPDMOD1	UPDMOD0
bit 15							bit 8

r-0	R/W-0	U-0	U-0	R/W-0	R/W-0	R/W-0	R/W-0
—	TRGMOD	—	—	SOCS3(1,2,3)	SOCS2(1,2,3)	SOCS1(1,2,3)	SOCS0(1,2,3)
bit 7							bit 0

Legend:	r = Reserved bit		
R = Readable bit	W = Writable bit	U = Unimplemented bit, read as ‘0’	
-n = Value at POR	‘1’ = Bit is set	‘0’ = Bit is cleared	x = Bit is unknown

bit 15 **MDCSEL:** Master Duty Cycle Register Select bit
1 = PWM Generator uses MDC register
0 = PWM Generator uses PGxDC register

bit 14 **MPERSEL:** Master Period Register Select bit
1 = PWM Generator uses MPER register
0 = PWM Generator uses PGxPER register

bit 13 **MPHSEL:** Master Phase Register Select bit
1 = PWM Generator uses MPHASE register
0 = PWM Generator uses PGxPHASE register

bit 12 **Unimplemented:** Read as ‘0’

bit 11 **MSTEN:** Master Update Enable bit
1 = PWM Generator broadcasts software set/clear of the UPDREQ status bit and EOC signal to other PWM Generators
0 = PWM Generator does not broadcast the UPDREQ status bit state or EOC signal

bit 10-8 **UPDMOD[2:0]:** PWM Buffer Update Mode Selection bits
011 = Slaved immediate update
Data registers immediately, or as soon as possible, when a Master update request is received. A Master update request will be transmitted if MSTEN = 1 and UPDATE = 1 for the requesting PWM Generator.
010 = Slaved SOC update
Data registers at start of next cycle if a Master update request is received. A master update request will be transmitted if MSTEN = 1 and UPDATE = 1 for the requesting PWM Generator.
001 = Immediate update
Data registers immediately, or as soon as possible, if UPDATE = 1. The UPDATE status bit will be cleared automatically after the update occurs (UPDATE = 1). The UPDATE status bit will be cleared automatically after the update occurs.
000 = SOC update
Data registers at start of next PWM cycle if UPDATE = 1. The UPDATE status bit will be cleared automatically after the update occurs.(1)

bit 7 **Reserved:** Maintain as ‘0’

Note 1: The PCI selected Sync signal is always available to be OR’d with the selected SOC signal per the SOCS[3:0] bits if the PCI Sync function is enabled.

2: The source selected by the SOCS[3:0] bits MUST operate from the same clock source as the local PWM Generator. If not, the source must be routed through the PCI Sync logic so the trigger signal may be synchronized to the PWM Generator clock domain.

3: PWM Generators are grouped into groups of four: PG1-PG4 and PG5-PG8, if available. Any generator within a group of four may be used to trigger another generator within the same group.

REGISTER 11-13: PGxCONH: PWM GENERATOR x CONTROL REGISTER HIGH (CONTINUED)

bit 6 **TRGMOD:** PWM Generator Trigger Mode Selection bit
1 = PWM Generator operates in Retriggerable mode
0 = PWM Generator operates in Single Trigger mode

bit 5-4 **Unimplemented:** Read as '0'

bit 3-0 **SOCS[3:0]:** Start-of-Cycle Selection bits(1,2,3)
1111 = TRIG bit or PCI Sync function only (no hardware trigger source is selected)
1110-0101 = Reserved
0100 = Trigger output selected by PG4 PGTRGSEL[2:0] bits (PGxEVTL[2:0])
0011 = Trigger output selected by PG3 PGTRGSEL[2:0] bits (PGxEVTL[2:0])
0010 = Trigger output selected by PG2 PGTRGSEL[2:0] bits (PGxEVTL[2:0])
0001 = Trigger output selected by PG1 PGTRGSEL[2:0] bits (PGxEVTL[2:0])
0000 = Local EOC – PWM Generator is self-triggered

Note 1: The PCI selected Sync signal is always available to be OR'd with the selected SOC signal per the SOCS[3:0] bits if the PCI Sync function is enabled.

2: The source selected by the SOCS[3:0] bits MUST operate from the same clock source as the local PWM Generator. If not, the source must be routed through the PCI Sync logic so the trigger signal may be synchronized to the PWM Generator clock domain.

3: PWM Generators are grouped into groups of four: PG1-PG4 and PG5-PG8, if available. Any generator within a group of four may be used to trigger another generator within the same group.

© 2018-2019 Microchip Technology Inc.

REGISTER 11-14: PGxSTAT: PWM GENERATOR x STATUS REGISTER

HS/C-0	HS/C-0	HS/C-0	HS/C-0	R-0	R-0	R-0	R-0
SEVT	FLTEVT	CLEVT	FFEVT	SACT	FLTACT	CLACT	FFACT
bit 15							bit 8

W-0	W-0	HS/R/W-0	R-0	W-0	R-0	R-0	R-0
TRSET	TRCLR	CAP[1]	UPDATE	UPDREQ	STEER	CAHALF	TRIG
bit 7							bit 0

Legend:	C = Clearable bit	HS = Hardware Settable bit	
R = Readable bit	W = Writable bit	‘0’ = Bit is cleared	x = Bit is unknown
-n = Value at POR	‘1’ = Bit is set	U = Unimplemented bit, read as ‘0’	

bit 15 **SEVT:** PCI Sync Event bit
1 = A PCI Sync event has occurred (rising edge on PCI Sync output or PCI Sync output is high when module is enabled)
0 = No PCI Sync event has occurred

bit 14 **FLTEVT:** PCI Fault Active Status bit
1 = A Fault event has occurred (rising edge on PCI Fault output or PCI Fault output is high when module is enabled)
0 = No Fault event has occurred

bit 13 **CLEVT:** PCI Current Limit Status bit
1 = A PCI current limit event has occurred (rising edge on PCI current limit output or PCI current limit output is high when module is enabled)
0 = No PCI current limit event has occurred

bit 12 **FFEVT:** PCI Feed-Forward Active Status bit
1 = A PCI feed-forward event has occurred (rising edge on PCI feed-forward output or PCI feed-forward output is high when module is enabled)
0 = No PCI feed-forward event has occurred

bit 11 **SACT:** PCI Sync Status bit
1 = PCI Sync output is active
0 = PCI Sync output is inactive

bit 10 **FLTACT:** PCI Fault Active Status bit
1 = PCI Fault output is active
0 = PCI Fault output is inactive

bit 9 **CLACT:** PCI Current Limit Status bit
1 = PCI current limit output is active
0 = PCI current limit output is inactive

bit 8 **FFACT:** PCI Feed-Forward Active Status bit
1 = PCI feed-forward output is active
0 = PCI feed-forward output is inactive

bit 7 **TRSET:** PWM Generator Software Trigger Set bit
User software writes a ‘1’ to this bit location to trigger a PWM Generator cycle. The bit location always reads as ‘0’. The TRIG bit will indicate ‘1’ when the PWM Generator is triggered.

bit 6 **TRCLR:** PWM Generator Software Trigger Clear bit
User software writes a ‘1’ to this bit location to stop a PWM Generator cycle. The bit location always reads as ‘0’. The TRIG bit will indicate ‘0’ when the PWM Generator is not triggered.

Note 1: User software may write a ‘1’ to CAP as a request to initiate a software capture. The CAP status bit will be set when the capture event has occurred. No further captures will occur until CAP is cleared by software.

REGISTER 11-14: PGxSTAT: PWM GENERATOR x STATUS REGISTER (CONTINUED)

bit 5 **CAP:** Capture Status bit[1]
1 = PWM Generator time base value has been captured in PGxCAP
0 = No capture has occurred

bit 4 **UPDATE:** PWM Data Register Update Status/Control bit
1 = PWM Data register update is pending – user Data registers are not writable
0 = No PWM Data register update is pending

bit 3 **UPDREQ:** PWM Data Register Update Request bit
User software writes a '1' to this bit location to request a PWM Data register update. The bit location always reads as '0'. The UPDATE status bit will indicate '1' when an update is pending.

bit 2 **STEER:** Output Steering Status bit (Push-Pull Output mode only)
1 = PWM Generator is in 2nd cycle of Push-Pull mode
0 = PWM Generator is in 1st cycle of Push-Pull mode

bit 1 **CAHALF:** Half Cycle Status bit (Center-Aligned modes only)
1 = PWM Generator is in 2nd half of time base cycle
0 = PWM Generator is in 1st half of time base cycle

bit 0 **TRIG:** PWM Trigger Status bit
1 = PWM Generator is triggered and PWM cycle is in progress
0 = No PWM cycle is in progress

Note 1: User software may write a '1' to CAP as a request to initiate a software capture. The CAP status bit will be set when the capture event has occurred. No further captures will occur until CAP is cleared by software.

© 2018-2019 Microchip Technology Inc.

REGISTER 11-15: PGxIOCONL: PWM GENERATOR x I/O CONTROL REGISTER LOW

R/W-0	R/W-0	R/W-0	R/W-0	R/W-0	R/W-0	R/W-0	R/W-0
CLMOD	SWAP	OVRENH	OVRENL	OVRDAT1	OVRDAT0	OSYNC1	OSYNC0
bit 15							bit 8

R/W-0	R/W-0	R/W-0	R/W-0	R/W-0	R/W-0	R/W-0	R/W-0
FLTDAT1	FLTDAT0	CLDAT1	CLDAT0	FFDAT1	FFDAT0	DBDAT1	DBDAT0
bit 7							bit 0

Legend:			
R = Readable bit	W = Writable bit	U = Unimplemented bit, read as ‘0’	
-n = Value at POR	‘1’ = Bit is set	‘0’ = Bit is cleared	x = Bit is unknown

bit 15 **CLMOD:** Current Limit Mode Select bit
- 1 = If PCI current limit is active, then the PWMxH and PWMxL output signals are inverted (bit flipping), and the CLDAT[1:0] bits are not used
- 0 = If PCI current limit is active, then the CLDAT[1:0] bits define the PWM output levels

bit 14 **SWAP:** Swap PWM Signals to PWMxH and PWMxL Device Pins bit
- 1 = The PWMxH signal is connected to the PWMxL pin and the PWMxL signal is connected to the PWMxH pin
- 0 = PWMxH/L signals are mapped to their respective pins

bit 13 **OVRENH:** User Override Enable for PWMxH Pin bit
- 1 = OVRDAT1 provides data for output on the PWMxH pin
- 0 = PWM Generator provides data for the PWMxH pin

bit 12 **OVRENL:** User Override Enable for PWMxL Pin bit
- 1 = OVRDAT0 provides data for output on the PWMxL pin
- 0 = PWM Generator provides data for the PWMxL pin

bit 11-10 **OVRDAT[1:0]:** Data for PWMxH/PWMxL Pins if Override is Enabled bits

If OVERENH = 1, then OVRDAT1 provides data for PWMxH.
If OVERENL = 1, then OVRDAT0 provides data for PWMxL.

bit 9-8 **OSYNC[1:0]:** User Output Override Synchronization Control bits
- 11 = Reserved
- 10 = User output overrides via the OVRENH/L and OVRDAT[1:0] bits occur when specified by the UPDMOD[2:0] bits in the PGxCONH register
- 01 = User output overrides via the OVRENH/L and OVRDAT[1:0] bits occur immediately (as soon as possible)
- 00 = User output overrides via the OVRENH/L and OVRDAT[1:0] bits are synchronized to the local PWM time base (next Start-of-Cycle)

bit 7-6 **FLTDAT[1:0]:** Data for PWMxH/PWMxL Pins if Fault Event is Active bits

If Fault is active, then FLTDAT1 provides data for PWMxH.
If Fault is active, then FLTDAT0 provides data for PWMxL.

bit 5-4 **CLDAT[1:0]:** Data for PWMxH/PWMxL Pins if Current Limit Event is Active bits

If current limit is active, then CLDAT1 provides data for PWMxH.
If current limit is active, then CLDAT0 provides data for PWMxL.

bit 3-2 **FFDAT[1:0]:** Data for PWMxH/PWMxL Pins if Feed-Forward Event is Active bits

If feed-forward is active, then FFDAT1 provides data for PWMxH.
If feed-forward is active, then FFDAT0 provides data for PWMxL.

bit 1-0 **DBDAT[1:0]:** Data for PWMxH/PWMxL Pins if Debug Mode is Active bits

If Debug mode is active and device halted, then DBDAT1 provides data for PWMxH.
If Debug mode is active and device halted, then DBDAT0 provides data for PWMxL.

REGISTER 11-16: PGxIOCONH: PWM GENERATOR x I/O CONTROL REGISTER HIGH

U-0	R/W-0	R/W-0	R/W-0	U-0	U-0	U-0	R/W-0
—	CAPSRC2(1)	CAPSRC1(1)	CAPSRC0(1)	—	—	—	DTCMPSEL
bit 15							bit 8

U-0	U-0	R/W-0	R/W-0	R/W-0	R/W-0	R/W-0	R/W-0
—	—	PMOD1	PMOD0	PENH	PENL	POLH	POLL
bit 7							bit 0

Legend:			
R = Readable bit	W = Writable bit	U = Unimplemented bit, read as ‘0’	
-n = Value at POR	‘1’ = Bit is set	‘0’ = Bit is cleared	x = Bit is unknown

bit 15 **Unimplemented:** Read as ‘0’

bit 14-12 **CAPSRC[2:0]:** Time Base Capture Source Selection bits(1)
- 111 = Reserved
- 110 = Reserved
- 101 = Reserved
- 100 = Capture time base value at assertion of selected PCI Fault signal
- 011 = Capture time base value at assertion of selected PCI current limit signal
- 010 = Capture time base value at assertion of selected PCI feed-forward signal
- 001 = Capture time base value at assertion of selected PCI Sync signal
- 000 = No hardware source selected for time base capture – software only

bit 11-9 **Unimplemented:** Read as ‘0’

bit 8 **DTCMPSEL:** Dead-Time Compensation Select bit
- 1 = Dead-time compensation is controlled by PCI feed-forward limit logic
- 0 = Dead-time compensation is controlled by PCI Sync logic

bit 7-6 **Unimplemented:** Read as ‘0’

bit 5-4 **PMOD[1:0]:** PWM Generator Output Mode Selection bits
- 11 = Reserved
- 10 = PWM Generator outputs operate in Push-Pull mode
- 01 = PWM Generator outputs operate in Independent mode
- 00 = PWM Generator outputs operate in Complementary mode

bit 3 **PENH:** PWMxH Output Port Enable bit
- 1 = PWM Generator controls the PWMxH output pin
- 0 = PWM Generator does not control the PWMxH output pin

bit 2 **PENL:** PWMxL Output Port Enable bit
- 1 = PWM Generator controls the PWMxL output pin
- 0 = PWM Generator does not control the PWMxL output pin

bit 1 **POLH:** PWMxH Output Polarity bit
- 1 = Output pin is active-low
- 0 = Output pin is active-high

bit 0 **POLL:** PWMxL Output Polarity bit
- 1 = Output pin is active-low
- 0 = Output pin is active-high

Note 1: A capture may be initiated in software at any time by writing a ‘1’ to CAP (PGxSTAT[5]).

© 2018-2019 Microchip Technology Inc.

REGISTER 11-17: PGxEVTL: PWM GENERATOR x EVENT REGISTER LOW

R/W-0	R/W-0	R/W-0	R/W-0	R/W-0	R/W-0	R/W-0	R/W-0
ADTR1PS4	ADTR1PS3	ADTR1PS2	ADTR1PS1	ADTR1PS0	ADTR1EN3	ADTR1EN2	ADTR1EN1
bit 15							bit 8

U-0	U-0	U-0	R/W-0	R/W-0	R/W-0	R/W-0	R/W-0
—	—	—	UPDTRG1	UPDTRG0	PGTRGSEL2(1)	PGTRGSEL1(1)	PGTRGSEL0(1)
bit 7							bit 0

Legend:			
R = Readable bit	W = Writable bit	U = Unimplemented bit, read as ‘0’	
-n = Value at POR	‘1’ = Bit is set	‘0’ = Bit is cleared	x = Bit is unknown

bit 15-11 **ADTR1PS[4:0]:** ADC Trigger 1 Postscaler Selection bits
`11111` = 1:32
`...`
`00010` = 1:3
`00001` = 1:2
`00000` = 1:1

bit 10 **ADTR1EN3:** ADC Trigger 1 Source is PGxTRIGC Compare Event Enable bit
`1` = PGxTRIGC register compare event is enabled as trigger source for ADC Trigger 1
`0` = PGxTRIGC register compare event is disabled as trigger source for ADC Trigger 1

bit 9 **ADTR1EN2:** ADC Trigger 1 Source is PGxTRIGB Compare Event Enable bit
`1` = PGxTRIGB register compare event is enabled as trigger source for ADC Trigger 1
`0` = PGxTRIGB register compare event is disabled as trigger source for ADC Trigger 1

bit 8 **ADTR1EN1:** ADC Trigger 1 Source is PGxTRIGA Compare Event Enable bit
`1` = PGxTRIGA register compare event is enabled as trigger source for ADC Trigger 1
`0` = PGxTRIGA register compare event is disabled as trigger source for ADC Trigger 1

bit 7-5 **Unimplemented:** Read as ‘`0`’

bit 4-3 **UPDTRG[1:0]:** Update Trigger Select bits
`11` = A write of the PGxTRIGA register automatically sets the UPDATE bit
`10` = A write of the PGxPHASE register automatically sets the UPDATE bit
`01` = A write of the PGxDC register automatically sets the UPDATE bit
`00` = User must set the UPDATE bit (PGxSTAT[4]) manually

bit 2-0 **PGTRGSEL[2:0]:** PWM Generator Trigger Output Selection bits(1)
`111` = Reserved
`110` = Reserved
`101` = Reserved
`100` = Reserved
`011` = PGxTRIGC compare event is the PWM Generator trigger
`010` = PGxTRIGB compare event is the PWM Generator trigger
`001` = PGxTRIGA compare event is the PWM Generator trigger
`000` = EOC event is the PWM Generator trigger

Note 1: These events are derived from the internal PWM Generator time base comparison events.

REGISTER 11-18: PGxEVTH: PWM GENERATOR x EVENT REGISTER HIGH

R/W-0	R/W-0	R/W-0	R/W-0	U-0	U-0	R/W-0	R/W-0
FLTIEN(1)	CLIEN(2)	FFIEN(3)	SIEN(4)	—	—	IEVTSEL1	IEVTSEL0
bit 15							bit 8

R/W-0	R/W-0	R/W-0	R/W-0	R/W-0	R/W-0	R/W-0	R/W-0
ADTR2EN3	ADTR2EN2	ADTR2EN1	ADTR1OFS4	ADTR1OFS3	ADTR1OFS2	ADTR1OFS1	ADTR1OFS0
bit 7							bit 0

Legend:			
R = Readable bit	W = Writable bit	U = Unimplemented bit, read as ‘0’	
-n = Value at POR	‘1’ = Bit is set	‘0’ = Bit is cleared	x = Bit is unknown

bit 15 **FLTIEN:** PCI Fault Interrupt Enable bit(1)
- 1 = Fault interrupt is enabled
- 0 = Fault interrupt is disabled

bit 14 **CLIEN:** PCI Current Limit Interrupt Enable bit(2)
- 1 = Current limit interrupt is enabled
- 0 = Current limit interrupt is disabled

bit 13 **FFIEN:** PCI Feed-Forward Interrupt Enable bit(3)
- 1 = Feed-forward interrupt is enabled
- 0 = Feed-forward interrupt is disabled

bit 12 **SIEN:** PCI Sync Interrupt Enable bit(4)
- 1 = Sync interrupt is enabled
- 0 = Sync interrupt is disabled

bit 11-10 **Unimplemented:** Read as ‘0’

bit 9-8 **IEVTSEL[1:0]:** Interrupt Event Selection bits
- 11 = Time base interrupts are disabled (Sync, Fault, current limit and feed-forward events can be independently enabled)
- 10 = Interrupts CPU at ADC Trigger 1 event
- 01 = Interrupts CPU at TRIGA compare event
- 00 = Interrupts CPU at EOC

bit 7 **ADTR2EN3:** ADC Trigger 2 Source is PGxTRIGC Compare Event Enable bit
- 1 = PGxTRIGC register compare event is enabled as trigger source for ADC Trigger 2
- 0 = PGxTRIGC register compare event is disabled as trigger source for ADC Trigger 2

bit 6 **ADTR2EN2:** ADC Trigger 2 Source is PGxTRIGB Compare Event Enable bit
- 1 = PGxTRIGB register compare event is enabled as trigger source for ADC Trigger 2
- 0 = PGxTRIGB register compare event is disabled as trigger source for ADC Trigger 2

bit 5 **ADTR2EN1:** ADC Trigger 2 Source is PGxTRIGA Compare Event Enable bit
- 1 = PGxTRIGA register compare event is enabled as trigger source for ADC Trigger 2
- 0 = PGxTRIGA register compare event is disabled as trigger source for ADC Trigger 2

bit 4-0 **ADTR1OFS[4:0]:** ADC Trigger 1 Offset Selection bits
- 11111 = Offset by 31 trigger events
- . . .
- 00010 = Offset by 2 trigger events
- 00001 = Offset by 1 trigger event
- 00000 = No offset

Note 1: An interrupt is only generated on the rising edge of the PCI Fault active signal.
2: An interrupt is only generated on the rising edge of the PCI current limit active signal.
3: An interrupt is only generated on the rising edge of the PCI feed-forward active signal.
4: An interrupt is only generated on the rising edge of the PCI Sync active signal.

© 2018-2019 Microchip Technology Inc.

REGISTER 11-19: PGxyPCIL: PWM GENERATOR xy PCI REGISTER LOW (x = PWM GENERATOR #; y = F, CL, FF OR S)

R/W-0	R/W-0	R/W-0	R/W-0	R/W-0	R/W-0	R/W-0	R/W-0
TSYNCDIS	TERM2	TERM1	TERM0	AQPS	AQSS2	AQSS1	AQSS0
bit 15							bit 8

R/W-0	R/W-0	R/W-0	R/W-0	R/W-0	R/W-0	R/W-0	R/W-0
SWTERM	PSYNC	PPS	PSS4	PSS3	PSS2	PSS1	PSS0
bit 7							bit 0

Legend:			
R = Readable bit	W = Writable bit	U = Unimplemented bit, read as ‘0’	
-n = Value at POR	‘1’ = Bit is set	‘0’ = Bit is cleared	x = Bit is unknown

bit 15 **TSYNCDIS:** Termination Synchronization Disable bit
`1` = Termination of latched PCI occurs immediately
`0` = Termination of latched PCI occurs at PWM EOC

bit 14-12 **TERM[2:0]:** Termination Event Selection bits
`111` = Selects PCI Source #9
`110` = Selects PCI Source #8
`101` = Selects PCI Source #1 (PWM Generator output selected by the PWMPCI[2:0] bits)
`100` = PGxTRIGC trigger event
`011` = PGxTRIGB trigger event
`010` = PGxTRIGA trigger event
`001` = Auto-Terminate: Terminate when PCI source transitions from active to inactive
`000` = Manual Terminate: Terminate on a write of ‘`1`’ to the SWTERM bit location

bit 11 **AQPS:** Acceptance Qualifier Polarity Select bit
`1` = Inverted
`0` = Not inverted

bit 10-8 **AQSS[2:0]:** Acceptance Qualifier Source Selection bits
`111` = SWPCI control bit only (qualifier forced to ‘`0`’)
`110` = Selects PCI Source #9
`101` = Selects PCI Source #8
`100` = Selects PCI Source #1 (PWM Generator output selected by the PWMPCI[2:0] bits)
`011` = PWM Generator is triggered
`010` = LEB is active
`001` = Duty cycle is active (base PWM Generator signal)
`000` = No acceptance qualifier is used (qualifier forced to ‘`1`’)

bit 7 **SWTERM:** PCI Software Termination bit
A write of ‘`1`’ to this location will produce a termination event. This bit location always reads as ‘`0`’.

bit 6 **PSYNC:** PCI Synchronization Control bit
`1` = PCI source is synchronized to PWM EOC
`0` = PCI source is not synchronized to PWM EOC

bit 5 **PPS:** PCI Polarity Select bit
`1` = Inverted
`0` = Not inverted

REGISTER 11-19: PGxyPCIL: PWM GENERATOR xy PCI REGISTER LOW (x = PWM GENERATOR #; y = F, CL, FF OR S) (CONTINUED)

bit 4-0 **PSS[4:0]:** PCI Source Selection bits

11111 = CLC1
11110 = Reserved
11101 = Comparator 3 output
11100 = Comparator 2 output
11011 = Comparator 1 output
11010 = PWM Event D
11001 = PWM Event C
11000 = PWM Event B
10111 = PWM Event A
10110 = Device pin, PCI[22]
10101 = Device pin, PCI[21]
10100 = Device pin, PCI[20]
10011 = Device pin, PCI[19]
10010 = RPn input, PCI18R
10001 = RPn input, PCI17R
10000 = RPn input, PCI16R
01111 = RPn input, PCI15R
01110 = RPn input, PCI14R
01101 = RPn input, PCI13R
01100 = RPn input, PCI12R
01011 = RPn input, PCI11R
01010 = RPn input, PCI10R
01001 = RPn input, PCI9R
01000 = RPn input, PCI8R
00111 = Reserved
00110 = Reserved
00101 = Reserved
00100 = Reserved
00011 = Internally connected to Combo Trigger B
00010 = Internally connected to Combo Trigger A
00001 = Internally connected to the output of PWMPCI[2:0] MUX
00000 = Tied to ‘0’

© 2018-2019 Microchip Technology Inc.

REGISTER 11-20: PGxyPCIH: PWM GENERATOR xy PCI REGISTER HIGH (x = PWM GENERATOR #; y = F, CL, FF OR S)

R/W-0	R/W-0	R/W-0	R/W-0	U-0	R/W-0	R/W-0	R/W-0
BPEN	BPSEL2[(1)]	BPSEL1[(1)]	BPSEL0[(1)]	—	ACP2	ACP1	ACP0
bit 15							bit 8

R/W-0	R/W-0	R/W-0	R/W-0	R/W-0	R/W-0	R/W-0	R/W-0
SWPCI	SWPCIM1	SWPCIM0	LATMOD	TQPS	TQSS2	TQSS1	TQSS0
bit 7							bit 0

Legend:			
R = Readable bit	W = Writable bit	U = Unimplemented bit, read as ‘0’	
-n = Value at POR	‘1’ = Bit is set	‘0’ = Bit is cleared	x = Bit is unknown

bit 15 **BPEN:** PCI Bypass Enable bit
- 1 = PCI function is enabled and local PCI logic is bypassed; PWM Generator will be controlled by PCI function in the PWM Generator selected by the BPSEL[2:0] bits
- 0 = PCI function is not bypassed

bit 14-12 **BPSEL[2:0]:** PCI Bypass Source Selection bits[(1)]
- 111-100 = Reserved
- 011 = PCI control is sourced from PWM Generator 4 PCI logic when BPEN = 1
- 010 = PCI control is sourced from PWM Generator 3 PCI logic when BPEN = 1
- 001 = PCI control is sourced from PWM Generator 2 PCI logic when BPEN = 1
- 000 = PCI control is sourced from PWM Generator 1 PCI logic when BPEN = 1

bit 11 **Unimplemented:** Read as ‘0’

bit 10-8 **ACP[2:0]:** PCI Acceptance Criteria Selection bits
- 111 = Reserved
- 110 = Reserved
- 101 = Latched any edge
- 100 = Latched rising edge
- 011 = Latched
- 010 = Any edge
- 001 = Rising edge
- 000 = Level-sensitive

bit 7 **SWPCI:** Software PCI Control bit
- 1 = Drives a ‘1’ to PCI logic assigned to by the SWPCIM[1:0] control bits
- 0 = Drives a ‘0’ to PCI logic assigned to by the SWPCIM[1:0] control bits

bit 6-5 **SWPCIM[1:0]:** Software PCI Control Mode bits
- 11 = Reserved
- 10 = SWPCI bit is assigned to termination qualifier logic
- 01 = SWPCI bit is assigned to acceptance qualifier logic
- 00 = SWPCI bit is assigned to PCI acceptance logic

bit 4 **LATMOD:** PCI SR Latch Mode bit
- 1 = SR latch is Reset-dominant in Latched Acceptance modes
- 0 = SR latch is Set-dominant in Latched Acceptance modes

bit 3 **TQPS:** Termination Qualifier Polarity Select bit
- 1 = Inverted
- 0 = Not inverted

Note 1: Selects ‘0’ if selected PWM Generator is not present.

REGISTER 11-20: PGxyPCIH: PWM GENERATOR xy PCI REGISTER HIGH (x = PWM GENERATOR #; y = F, CL, FF OR S) (CONTINUED)

bit 2-0 **TQSS[2:0]:** Termination Qualifier Source Selection bits
- 111 = SWPCI control bit only (qualifier forced to '0')
- 110 = Selects PCI Source #9
- 101 = Selects PCI Source #8
- 100 = Selects PCI Source #1 (PWM Generator output selected by the PWMPCI[2:0] bits)
- 011 = PWM Generator is triggered
- 010 = LEB is active
- 001 = Duty cycle is active (base PWM Generator signal)
- 000 = No termination qualifier used (qualifier forced to '1')

Note 1: Selects '0' if selected PWM Generator is not present.

© 2018-2019 Microchip Technology Inc.

REGISTER 11-21: PGxLEBL: PWM GENERATOR x LEADING-EDGE BLANKING REGISTER LOW

R/W-0	R/W-0	R/W-0	R/W-0	R/W-0	R/W-0	R/W-0	R/W-0
LEB[15:8]							
bit 15							bit 8

R/W-0	R/W-0	R/W-0	R/W-0	R/W-0	R-0	R-0	R-0
LEB[7:0][(1)]							
bit 7							bit 0

Legend:			
R = Readable bit	W = Writable bit	U = Unimplemented bit, read as ‘0’	
-n = Value at POR	‘1’ = Bit is set	‘0’ = Bit is cleared	x = Bit is unknown

bit 15-0 **LEB[15:0]:** Leading-Edge Blanking Period bits[(1)]

Leading-Edge Blanking period. The three LSBs of the blanking time are not used, providing a blanking resolution of eight clock periods. The minimum blanking period is eight clock periods, which occurs when LEB[15:3] = 0.

Note 1: Bits[2:0] are read-only and always remain as ‘0’.

REGISTER 11-22: PGxLEBH: PWM GENERATOR x LEADING-EDGE BLANKING REGISTER HIGH

U-0	U-0	U-0	U-0	U-0	R/W-0	R/W-0	R/W-0
—	—	—	—	—	PWMPCI2(1)	PWMPCI1(1)	PWMPCI0(1)
bit 15							bit 8

U-0	U-0	U-0	U-0	R/W-0	R/W-0	R/W-0	R/W-0
—	—	—	—	PHR	PHF	PLR	PLF
bit 7							bit 0

Legend:			
R = Readable bit	W = Writable bit	U = Unimplemented bit, read as ‘0’	
-n = Value at POR	‘1’ = Bit is set	‘0’ = Bit is cleared	x = Bit is unknown

bit 15-11 **Unimplemented:** Read as ‘0’

bit 10-8 **PWMPCI[2:0]:** PWM Source for PCI Selection bits(1)
- 111-100 = Reserved
- 011 = PWM Generator #4 output is made available to PCI logic
- 010 = PWM Generator #3 output is made available to PCI logic
- 001 = PWM Generator #2 output is made available to PCI logic
- 000 = PWM Generator #1 output is made available to PCI logic

bit 7-4 **Unimplemented:** Read as ‘0’

bit 3 **PHR:** PWMxH Rising Edge Trigger Enable bit
- 1 = Rising edge of PWMxH will trigger the LEB duration counter
- 0 = LEB ignores the rising edge of PWMxH

bit 2 **PHF:** PWMxH Falling Edge Trigger Enable bit
- 1 = Falling edge of PWMxH will trigger the LEB duration counter
- 0 = LEB ignores the falling edge of PWMxH

bit 1 **PLR:** PWMxL Rising Edge Trigger Enable bit
- 1 = Rising edge of PWMxL will trigger the LEB duration counter
- 0 = LEB ignores the rising edge of PWMxL

bit 0 **PLF:** PWMxL Falling Edge Trigger Enable bit
- 1 = Falling edge of PWMxL will trigger the LEB duration counter
- 0 = LEB ignores the falling edge of PWMxL

Note 1: The selected PWM Generator source does not affect the LEB counter. This source can be optionally used as a PCI input, PCI qualifier, PCI terminator or PCI terminator qualifier (see the description in Register 11-19 and Register 11-20 for more information).

© 2018-2019 Microchip Technology Inc.

REGISTER 11-23: PGxPHASE: PWM GENERATOR x PHASE REGISTER

R/W-0	R/W-0	R/W-0	R/W-0	R/W-0	R/W-0	R/W-0	R/W-0
PGxPHASE[15:8]							
bit 15							bit 8

R/W-0	R/W-0	R/W-0	R/W-0	R/W-0	R/W-0	R/W-0	R/W-0
PGxPHASE[7:0]							
bit 7							bit 0

Legend:			
R = Readable bit	W = Writable bit	U = Unimplemented bit, read as ‘0’	
-n = Value at POR	‘1’ = Bit is set	‘0’ = Bit is cleared	x = Bit is unknown

bit 15-0 **PGxPHASE[15:0]:** PWM Generator x Phase Register bits

REGISTER 11-24: PGxDC: PWM GENERATOR x DUTY CYCLE REGISTER

R/W-0	R/W-0	R/W-0	R/W-0	R/W-0	R/W-0	R/W-0	R/W-0
PGxDC[15:8](1)							
bit 15							bit 8

R/W-0	R/W-0	R/W-0	R/W-0	R/W-0	R/W-0	R/W-0	R/W-0
PGxDC[7:0](1)							
bit 7							bit 0

Legend:			
R = Readable bit	W = Writable bit	U = Unimplemented bit, read as ‘0’	
-n = Value at POR	‘1’ = Bit is set	‘0’ = Bit is cleared	x = Bit is unknown

bit 15-0 **PGxDC[15:0]:** PWM Generator x Duty Cycle Register bits(1)

Note 1: Duty cycle values less than ‘`0x0008`’ should not be used (‘`0x0020`’ in High-Resolution mode).

REGISTER 11-25: PGxDCA: PWM GENERATOR x DUTY CYCLE ADJUSTMENT REGISTER

U-0	U-0	U-0	U-0	U-0	U-0	U-0	U-0
—	—	—	—	—	—	—	—
bit 15							bit 8

R/W-0	R/W-0	R/W-0	R/W-0	R/W-0	R/W-0	R/W-0	R/W-0
PGxDCA[7:0]							
bit 7							bit 0

Legend:			
R = Readable bit	W = Writable bit	U = Unimplemented bit, read as ‘0’	
-n = Value at POR	‘1’ = Bit is set	‘0’ = Bit is cleared	x = Bit is unknown

bit 15-8 **Unimplemented:** Read as ‘0’

bit 7-0 **PGxDCA[7:0]:** PWM Generator x Duty Cycle Adjustment Value bits
Depending on the state of the selected PCI source, the PGxDCA value will be added to the value in the PGxDC register to create the effective duty cycle. When the PCI source is active, PGxDCA is added.

REGISTER 11-26: PGxPER: PWM GENERATOR x PERIOD REGISTER

R/W-0	R/W-0	R/W-0	R/W-0	R/W-0	R/W-0	R/W-0	R/W-0
PGxPER[15:8](1)							
bit 15							bit 8

R/W-0	R/W-0	R/W-0	R/W-0	R/W-0	R/W-0	R/W-0	R/W-0
PGxPER[7:0](1)							
bit 7							bit 0

Legend:			
R = Readable bit	W = Writable bit	U = Unimplemented bit, read as ‘0’	
-n = Value at POR	‘1’ = Bit is set	‘0’ = Bit is cleared	x = Bit is unknown

bit 15-0 **PGxPER[15:0]:** PWM Generator x Period Register bits(1)

Note 1: Period values less than ‘0x0010’ should not be used (‘0x0080’ in High-Resolution mode).

© 2018-2019 Microchip Technology Inc.

REGISTER 11-27: PGxTRIGA: PWM GENERATOR x TRIGGER A REGISTER

R/W-0	R/W-0	R/W-0	R/W-0	R/W-0	R/W-0	R/W-0	R/W-0
PGxTRIGA[15:8]							
bit 15							bit 8

R/W-0	R/W-0	R/W-0	R/W-0	R/W-0	R/W-0	R/W-0	R/W-0
PGxTRIGA[7:0]							
bit 7							bit 0

Legend:			
R = Readable bit	W = Writable bit	U = Unimplemented bit, read as ‘0’	
-n = Value at POR	‘1’ = Bit is set	‘0’ = Bit is cleared	x = Bit is unknown

bit 15-0 **PGxTRIGA[15:0]:** PWM Generator x Trigger A Register bits

REGISTER 11-28: PGxTRIGB: PWM GENERATOR x TRIGGER B REGISTER

R/W-0	R/W-0	R/W-0	R/W-0	R/W-0	R/W-0	R/W-0	R/W-0
PGxTRIGB[15:8]							
bit 15							bit 8

R/W-0	R/W-0	R/W-0	R/W-0	R/W-0	R/W-0	R/W-0	R/W-0
PGxTRIGB[7:0]							
bit 7							bit 0

Legend:			
R = Readable bit	W = Writable bit	U = Unimplemented bit, read as ‘0’	
-n = Value at POR	‘1’ = Bit is set	‘0’ = Bit is cleared	x = Bit is unknown

bit 15-0 **PGxTRIGB[15:0]:** PWM Generator x Trigger B Register bits

REGISTER 11-29: PGxTRIGC: PWM GENERATOR x TRIGGER C REGISTER

R/W-0	R/W-0	R/W-0	R/W-0	R/W-0	R/W-0	R/W-0	R/W-0
PGxTRIGC[15:8]							
bit 15							bit 8

R/W-0	R/W-0	R/W-0	R/W-0	R/W-0	R/W-0	R/W-0	R/W-0
PGxTRIGC[7:0]							
bit 7							bit 0

Legend:			
R = Readable bit	W = Writable bit	U = Unimplemented bit, read as ‘0’	
-n = Value at POR	‘1’ = Bit is set	‘0’ = Bit is cleared	x = Bit is unknown

bit 15-0 **PGxTRIGC[15:0]:** PWM Generator x Trigger C Register bits

REGISTER 11-30: PGxDTL: PWM GENERATOR x DEAD-TIME REGISTER LOW

U-0	U-0	R/W-0	R/W-0	R/W-0	R/W-0	R/W-0	R/W-0
—	—	DTL[13:8][1]					
bit 15							bit 8

R/W-0	R/W-0	R/W-0	R/W-0	R/W-0	R/W-0	R/W-0	R/W-0
DTL[7:0]							
bit 7							bit 0

Legend:			
R = Readable bit	W = Writable bit	U = Unimplemented bit, read as ‘0’	
-n = Value at POR	‘1’ = Bit is set	‘0’ = Bit is cleared	x = Bit is unknown

bit 15-14 **Unimplemented:** Read as ‘0’

bit 13-0 **DTL[13:0]:** PWMxL Dead-Time Delay bits[1]

Note 1: DTL[13:11] bits are not available when HREN (PGxCONL[7]) = 0.

REGISTER 11-31: PGxDTH: PWM GENERATOR x DEAD-TIME REGISTER HIGH

U-0	U-0	R/W-0	R/W-0	R/W-0	R/W-0	R/W-0	R/W-0
—	—	DTH[13:8][1]					
bit 15							bit 8

R/W-0	R/W-0	R/W-0	R/W-0	R/W-0	R/W-0	R/W-0	R/W-0
DTH[7:0]							
bit 7							bit 0

Legend:			
R = Readable bit	W = Writable bit	U = Unimplemented bit, read as ‘0’	
-n = Value at POR	‘1’ = Bit is set	‘0’ = Bit is cleared	x = Bit is unknown

bit 15-14 **Unimplemented:** Read as ‘0’

bit 13-0 **DTH[13:0]:** PWMxH Dead-Time Delay bits[1]

Note 1: DTH[13:11] bits are not available when HREN (PGxCONL[7]) = 0.

© 2018-2019 Microchip Technology Inc.

REGISTER 11-32: PGxCAP: PWM GENERATOR x CAPTURE REGISTER

R-0	R-0	R-0	R-0	R-0	R-0	R-0	R-0
PGxCAP[15:8]							
bit 15							bit 8

R-0	R-0	R-0	R-0	R-0	R-0	R-0	R-0
PGxCAP[7:0][(1)]							
bit 7							bit 0

Legend:			
R = Readable bit	W = Writable bit	U = Unimplemented bit, read as ‘0’	
-n = Value at POR	‘1’ = Bit is set	‘0’ = Bit is cleared	x = Bit is unknown

bit 15-0 **PGxCAP[15:0]:** PGx Time Base Capture bits[(1)]

Note 1: PGxCAP[1:0] will read as ‘0’ in Standard Resolution mode. PGxCAP[4:0] will read as ‘0’ in High-Resolution mode.

NOTES:

© 2018-2019 Microchip Technology Inc.

12.0 HIGH-SPEED, 12-BIT ANALOG-TO-DIGITAL CONVERTER (ADC)

Note 1: This data sheet summarizes the features of the dsPIC33CK64MP105 family of devices. It is not intended to be a comprehensive reference source. To complement the information in this data sheet, refer to **"12-Bit High-Speed, Multiple SARs A/D Converter (ADC)"** (www.microchip.com/DS70005213) in the *"dsPIC33/PIC24 Family Reference Manual"*.

2: Some registers and associated bits described in this section may not be available on all devices. Refer to **Section 4.0 "Memory Organization"** in this data sheet for device-specific register and bit information.

The dsPIC33CK64MP105 devices have a high-speed, 12-bit Analog-to-Digital Converter (ADC) that features a low conversion latency, high resolution and over-sampling capabilities to improve performance in AC/DC, DC/DC power converters. The devices implement the ADC with three SAR cores, two dedicated and one shared.

12.1 ADC Features Overview

The High-Speed, 12-Bit Multiple SARs Analog-to-Digital Converter (ADC) includes the following features:

- Three ADC Cores: Two Dedicated Cores and One Shared (common) Core
- User-Configurable Resolution of up to 12 Bits for each Core
- Up to 3.5 Msps Conversion Rate per Channel at 12-Bit Resolution
- Low-Latency Conversion
- Up to 21 Analog Input Channels, with a Separate 16-Bit Conversion Result Register for each Input
- Conversion Result can be Formatted as Unsigned or Signed Data, on a per Channel Basis, for All Channels
- Simultaneous Sampling of up to Three Analog Inputs
- Channel Scan Capability
- Multiple Conversion Trigger Options for each Core, including:
  - PWM triggers from CPU cores
  - MCCP/SCCP modules triggers
  - CLC modules triggers
  - External pin trigger event (ADTRG31)
  - Software trigger
- Four Integrated Digital Comparators with Dedicated Interrupts:
  - Multiple comparison options
  - Assignable to specific analog inputs
- Four Oversampling Filters with Dedicated Interrupts:
  - Provide increased resolution
  - Assignable to a specific analog input

The module consists of three independent SAR ADC cores. Simplified block diagrams of the Multiple SARs 12-Bit ADC are shown in Figure 12-1 and Figure 12-2.

The analog inputs (channels) are connected through multiplexers and switches to the Sample-and-Hold (S&H) circuit of each ADC core. The core uses the channel information (the output format, the Measurement mode and the input number) to process the analog sample. When conversion is complete, the result is stored in the result buffer for the specific analog input, and passed to the digital filter and digital comparator if they were configured to use data from this particular channel.

The ADC module can sample up to five inputs at a time (four inputs from the dedicated SAR cores and one from the shared SAR core). If multiple ADC inputs request conversion on the shared core, the module will convert them in a sequential manner, starting with the lowest order input.

The ADC provides each analog input the ability to specify its own trigger source. This capability allows the ADC to sample and convert analog inputs that are associated with PWM generators operating on independent time bases.

FIGURE 12-1: ADC MODULE BLOCK DIAGRAM

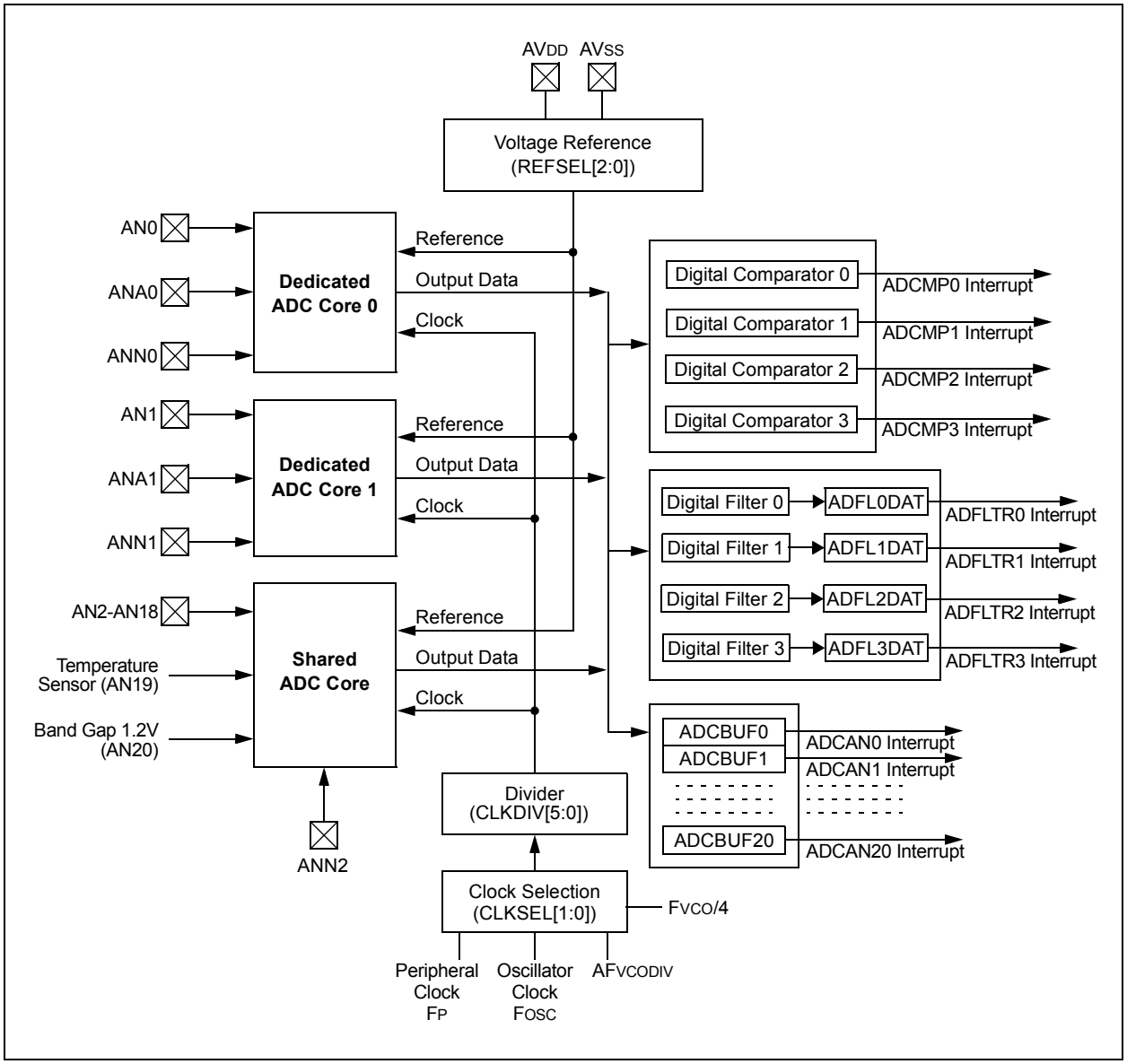

© 2018-2019 Microchip Technology Inc.

FIGURE 12-2: ADC SHARED CORE BLOCK DIAGRAM

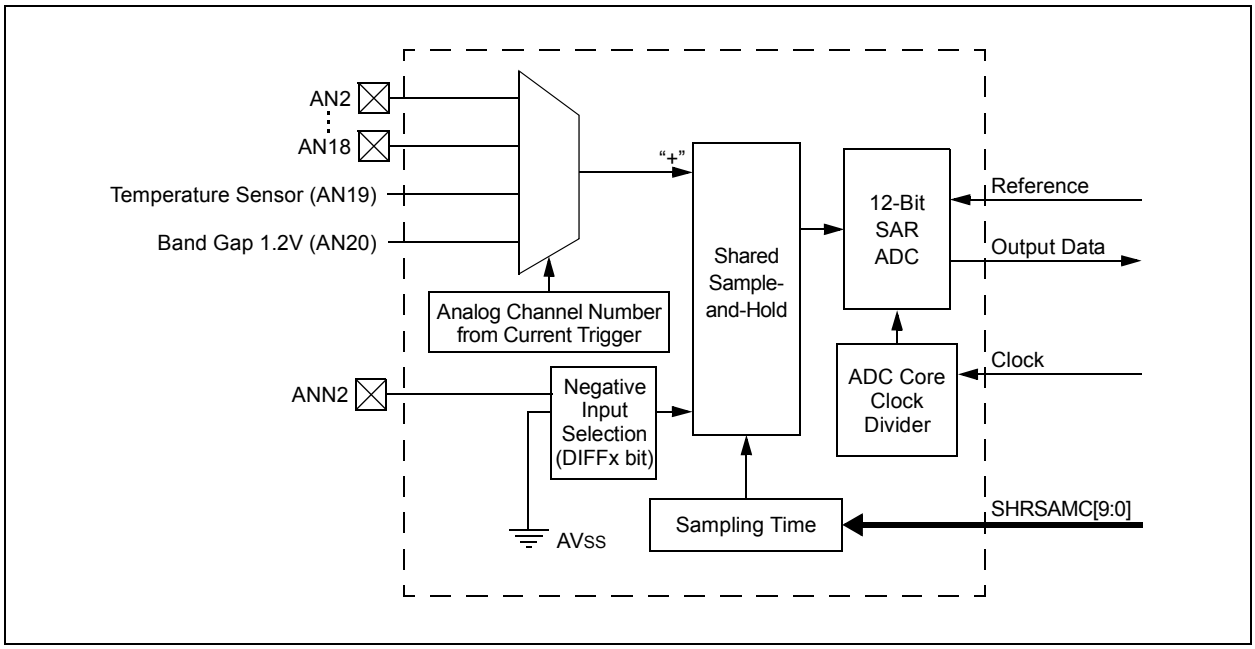

FIGURE 12-3: DEDICATED ADC CORE

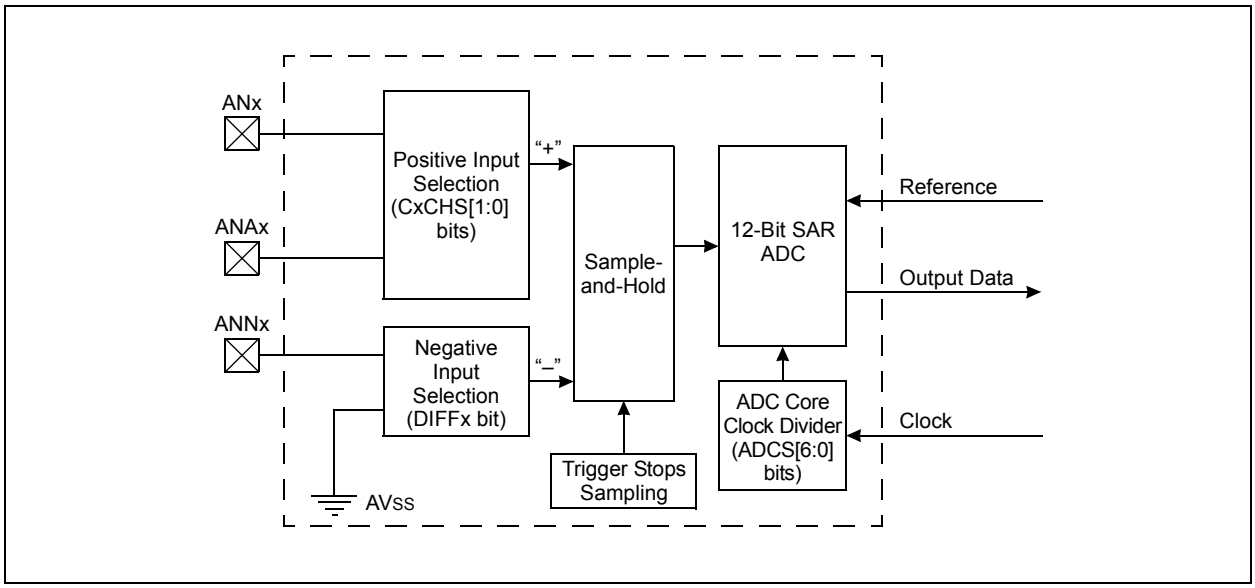

12.2 Temperature Sensor

The ADC channel, AN19, is connected to a forward-biased diode. It can be used to measure a die temperature. This diode provides an output with a temperature coefficient of approximately -1.5 mV/C that can be monitored by the ADC. To get the exact gain and offset numbers, the two temperature points calibration is recommended.

12.3 Analog-to-Digital Converter Resources

Many useful resources are provided on the main product page of the Microchip website for the devices listed in this data sheet. This product page contains the latest updates and additional information.

12.3.1 KEY RESOURCES

- **"12-Bit High-Speed, Multiple SARs A/D Converter (ADC)**" (www.microchip.com/DS70005213) in the *"dsPIC33/PIC24 Family Reference Manual"*
- Code Samples
- Application Notes
- Software Libraries
- Webinars
- All Related *"dsPIC33/PIC24 Family Reference Manual"* Sections
- Development Tools

© 2018-2019 Microchip Technology Inc.

12.4 ADC Control/Status Registers

REGISTER 12-1: ADCON1L: ADC CONTROL REGISTER 1 LOW

R/W-0	U-0	R/W-0	U-0	r-0	U-0	U-0	U-0
ADON(1)	—	ADSIDL	—	—	—	—	—
bit 15							bit 8

U-0	U-0	U-0	U-0	U-0	U-0	U-0	U-0
—	—	—	—	—	—	—	—
bit 7							bit 0

Legend:	r = Reserved bit		
R = Readable bit	W = Writable bit	U = Unimplemented bit, read as ‘0’	
-n = Value at POR	‘1’ = Bit is set	‘0’ = Bit is cleared	x = Bit is unknown

bit 15 **ADON:** ADC Enable bit(1)
1 = ADC module is enabled
0 = ADC module is off

bit 14 **Unimplemented:** Read as ‘0’

bit 13 **ADSIDL:** ADC Stop in Idle Mode bit
1 = Discontinues module operation when device enters Idle mode
0 = Continues module operation in Idle mode

bit 12 **Unimplemented:** Read as ‘0’

bit 11 **Reserved:** Maintain as ‘0’

bit 10-0 **Unimplemented:** Read as ‘0’

Note 1: Set the ADON bit only after the ADC module has been configured. Changing ADC Configuration bits when ADON = 1 will result in unpredictable behavior.

REGISTER 12-2: ADCON1H: ADC CONTROL REGISTER 1 HIGH

U-0	U-0	U-0	U-0	U-0	U-0	U-0	U-0
—	—	—	—	—	—	—	—
bit 15							bit 8

R/W-0	R/W-1	R/W-1	U-0	U-0	U-0	U-0	U-0
FORM	SHRRES1	SHRRES0	—	—	—	—	—
bit 7							bit 0

Legend:			
R = Readable bit	W = Writable bit	U = Unimplemented bit, read as ‘0’	
-n = Value at POR	‘1’ = Bit is set	‘0’ = Bit is cleared	x = Bit is unknown

bit 15-8 **Unimplemented:** Read as ‘0’

bit 7 **FORM:** Fractional Data Output Format bit
1 = Fractional
0 = Integer

bit 6-5 **SHRRES[1:0]:** Shared ADC Core Resolution Selection bits
11 = 12-bit resolution
10 = 10-bit resolution
01 = 8-bit resolution
00 = 6-bit resolution

bit 4-0 **Unimplemented:** Read as ‘0’

© 2018-2019 Microchip Technology Inc.

REGISTER 12-3: ADCON2L: ADC CONTROL REGISTER 2 LOW

R/W-0	R/W-0	U-0	R/W-0	R/W-0	R/W-0	R/W-0	R/W-0
REFCIE	REFERCIE	—	EIEN	PTGEN(3)	SHREISEL2(1)	SHREISEL1(1)	SHREISEL0(1)
bit 15							bit 8

U-0	R/W-0	R/W-0	R/W-0	R/W-0	R/W-0	R/W-0	R/W-0
—	SHRADCS[6:0](2)						
bit 7							bit 0

Legend:			
R = Readable bit	W = Writable bit	U = Unimplemented bit, read as ‘0’	
-n = Value at POR	‘1’ = Bit is set	‘0’ = Bit is cleared	x = Bit is unknown

bit 15 **REFCIE:** Band Gap and Reference Voltage Ready Common Interrupt Enable bit
1 = Common interrupt will be generated when the band gap will become ready
0 = Common interrupt is disabled for the band gap ready event

bit 14 **REFERCIE:** Band Gap or Reference Voltage Error Common Interrupt Enable bit
1 = Common interrupt will be generated when a band gap or reference voltage error is detected
0 = Common interrupt is disabled for the band gap and reference voltage error event

bit 13 **Unimplemented:** Read as ‘0’

bit 12 **EIEN:** Early Interrupts Enable bit
1 = The early interrupt feature is enabled for the input channel interrupts (when the EISTATx flag is set)
0 = The individual interrupts are generated when conversion is done (when the ANxRDY flag is set)

bit 11 **PTGEN:** PTG Conversion Request Interface bit(3)
1 = PTG triggers are enabled
0 = PTG triggers are disabled

bit 10-8 **SHREISEL[2:0]:** Shared Core Early Interrupt Time Selection bits(1)
111 = Early interrupt is set and interrupt is generated eight TADCORE clocks prior to when the data is ready
110 = Early interrupt is set and interrupt is generated seven TADCORE clocks prior to when the data is ready
101 = Early interrupt is set and interrupt is generated six TADCORE clocks prior to when the data is ready
100 = Early interrupt is set and interrupt is generated five TADCORE clocks prior to when the data is ready
011 = Early interrupt is set and interrupt is generated four TADCORE clocks prior to when the data is ready
010 = Early interrupt is set and interrupt is generated three TADCORE clocks prior to when the data is ready
001 = Early interrupt is set and interrupt is generated two TADCORE clocks prior to when the data is ready
000 = Early interrupt is set and interrupt is generated one TADCORE clock prior to when the data is ready

bit 7 **Unimplemented:** Read as ‘0’

bit 6-0 **SHRADCS[6:0]:** Shared ADC Core Input Clock Divider bits(2)
These bits determine the number of TCORESRC (Source Clock Periods) for one shared TADCORE (Core Clock Period).
1111111 = 254 Source Clock Periods
...
0000011 = 6 Source Clock Periods
0000010 = 4 Source Clock Periods
0000001 = 2 Source Clock Periods
0000000 = 2 Source Clock Periods

Note 1: For the 6-bit shared ADC core resolution (SHRRES[1:0] = 00), the SHREISEL[2:0] settings, from ‘100’ to ‘111’, are not valid and should not be used. For the 8-bit shared ADC core resolution (SHRRES[1:0] = 01), the SHREISEL[2:0] settings, ‘110’ and ‘111’, are not valid and should not be used.

2: The ADC clock frequency, selected by the SHRADCS[6:0] bits, must not exceed 70 MHz.

3: Other ADC trigger sources cannot be used if PTG triggers are enabled.

REGISTER 12-4: ADCON2H: ADC CONTROL REGISTER 2 HIGH

HSC/R-0	HSC/R-0	U-0	r-0	r-0	r-0	R/W-0	R/W-0
REFRDY	REFERR	—	—	—	—	SHRSAMC9	SHRSAMC8
bit 15							bit 8

R/W-0	R/W-0	R/W-0	R/W-0	R/W-0	R/W-0	R/W-0	R/W-0
SHRSAMC7	SHRSAMC6	SHRSAMC5	SHRSAMC4	SHRSAMC3	SHRSAMC2	SHRSAMC1	SHRSAMC0
bit 7							bit 0

Legend:	r = Reserved bit	U = Unimplemented bit, read as ‘0’	
R = Readable bit	W = Writable bit	HSC = Hardware Settable/Clearable bit	
-n = Value at POR	‘1’ = Bit is set	‘0’ = Bit is cleared	x = Bit is unknown

bit 15 **REFRDY:** Band Gap and Reference Voltage Ready Flag bit
1 = Band gap is ready
0 = Band gap is not ready

bit 14 **REFERR:** Band Gap or Reference Voltage Error Flag bit
1 = Band gap was removed after the ADC module was enabled (ADON = 1)
0 = No band gap error was detected

bit 13 **Unimplemented:** Read as ‘0’

bit 12-10 **Reserved:** Maintain as ‘0’

bit 9-0 **SHRSAMC[9:0]:** Shared ADC Core Sample Time Selection bits
These bits specify the number of shared ADC Core Clock Periods (T_{ADCORE}) for the shared ADC core sample time.
1111111111 = 1025 T_{ADCORE}
. . .
0000000001 = 3 T_{ADCORE}
0000000000 = 2 T_{ADCORE}

© 2018-2019 Microchip Technology Inc.

REGISTER 12-5: ADCON3L: ADC CONTROL REGISTER 3 LOW

R/W-0	R/W-0	R/W-0	R/W-0	R/W-0	HSC/R-0	R/W-0	HSC/R-0
REFSEL2	REFSEL1	REFSEL0	SUSPEND	SUSPCIE	SUSPRDY	SHRSAMP	CNVRTCH
bit 15							bit 8

R/W-0	HSC/R-0	R/W-0	R/W-0	R/W-0	R/W-0	R/W-0	R/W-0
SWLCTRG	SWCTRG	CNVCHSEL5	CNVCHSEL4	CNVCHSEL3	CNVCHSEL2	CNVCHSEL1	CNVCHSEL0
bit 7							bit 0

Legend:	U = Unimplemented bit, read as ‘0’		
R = Readable bit	W = Writable bit	HSC = Hardware Settable/Clearable bit	
-n = Value at POR	‘1’ = Bit is set	‘0’ = Bit is cleared	x = Bit is unknown

bit 15-13 **REFSEL[2:0]:** ADC Reference Voltage Selection bits

Value	VREFH	VREFL
000	AVDD	AVSS

001-111 = **Unimplemented:** Do not use

bit 12 **SUSPEND:** All ADC Core Triggers Disable bit

1 = All new trigger events for all ADC cores are disabled
0 = All ADC cores can be triggered

bit 11 **SUSPCIE:** Suspend All ADC Cores Common Interrupt Enable bit

1 = Common interrupt will be generated when ADC core triggers are suspended (SUSPEND bit = 1) and all previous conversions are finished (SUSPRDY bit becomes set)
0 = Common interrupt is not generated for suspend ADC cores event

bit 10 **SUSPRDY:** All ADC Cores Suspended Flag bit

1 = All ADC cores are suspended (SUSPEND bit = 1) and have no conversions in progress
0 = ADC cores have previous conversions in progress

bit 9 **SHRSAMP:** Shared ADC Core Sampling Direct Control bit

This bit should be used with the individual channel conversion trigger controlled by the CNVRTCH bit. It connects an analog input, specified by the CNVCHSEL[5:0] bits, to the shared ADC core and allows extending the sampling time. This bit is not controlled by hardware and must be cleared before the conversion starts (setting CNVRTCH to ‘1’).

1 = Shared ADC core samples an analog input specified by the CNVCHSEL[5:0] bits
0 = Sampling is controlled by the shared ADC core hardware

bit 8 **CNVRTCH:** Software Individual Channel Conversion Trigger bit

1 = Single trigger is generated for an analog input specified by the CNVCHSEL[5:0] bits; when the bit is set, it is automatically cleared by hardware on the next instruction cycle
0 = Next individual channel conversion trigger can be generated

bit 7 **SWLCTRG:** Software Level-Sensitive Common Trigger bit

1 = Triggers are continuously generated for all channels with the software, level-sensitive common trigger selected as a source in the ADTRIGxL and ADTRIGxH registers
0 = No software, level-sensitive common triggers are generated

bit 6 **SWCTRG:** Software Common Trigger bit

1 = Single trigger is generated for all channels with the software; common trigger selected as a source in the ADTRIGnL and ADTRIGxH registers; when the bit is set, it is automatically cleared by hardware on the next instruction cycle
0 = Ready to generate the next software common trigger

bit 5-0 **CNVCHSEL [5:0]:** Channel Number Selection for Software Individual Channel Conversion Trigger bits

These bits define a channel to be converted when the CNVRTCH bit is set.

REGISTER 12-6: ADCON3H: ADC CONTROL REGISTER 3 HIGH

R/W-0	R/W-0	R/W-0	R/W-0	R/W-0	R/W-0	R/W-0	R/W-0
CLKSEL1(1)	CLKSEL0(1)	CLKDIV5(2)	CLKDIV4(2)	CLKDIV3(2)	CLKDIV2(2)	CLKDIV1(2)	CLKDIV0(2)
bit 15							bit 8

R/W-0	U-0	U-0	U-0	U-0	U-0	R/W-0	R/W-0
SHREN	—	—	—	—	—	C1EN	C0EN
bit 7							bit 0

Legend:			
R = Readable bit	W = Writable bit	U = Unimplemented bit, read as ‘0’	
-n = Value at POR	‘1’ = Bit is set	‘0’ = Bit is cleared	x = Bit is unknown

bit 15-14 **CLKSEL[1:0]:** ADC Module Clock Source Selection bits(1)
`11` = FVCO/4
`10` = AFVCODIV
`01` = FOSC
`00` = FP (Peripheral Clock)

bit 13-8 **CLKDIV[5:0]:** ADC Module Clock Source Divider bits(2)
The divider forms a TCORESRC clock used by all ADC cores (shared and dedicated) from the TSRC ADC module clock source selected by the CLKSEL[1:0] bits. Then, each ADC core individually divides the TCORESRC clock to get a core-specific TADCORE clock using the ADCS[6:0] bits in the ADCOREXH register or the SHRADCS[6:0] bits in the ADCON2L register.
`111111` = 64 Source Clock Periods
`...`
`000011` = 4 Source Clock Periods
`000010` = 3 Source Clock Periods
`000001` = 2 Source Clock Periods
`000000` = 1 Source Clock Period

bit 7 **SHREN:** Shared ADC Core Enable bit
`1` = Shared ADC core is enabled
`0` = Shared ADC core is disabled

bit 6-2 **Unimplemented:** Read as ‘`0`’

bit 1 **C1EN:** Dedicated ADC Core 1 Enable bits
`1` = Dedicated ADC Core 1 is enabled
`0` = Dedicated ADC Core 1 is disabled

bit 0 **C0EN:** Dedicated ADC Core 0 Enable bits
`1` = Dedicated ADC Core 0 is enabled
`0` = Dedicated ADC Core 0 is disabled

Note 1: The ADC input clock frequency, selected by the CLKSEL[1:0] bits, must not exceed 560 MHz.
2: The ADC clock frequency, after the first divider selected by the CLKDIV[5:0] bits, must not exceed 280 MHz.

© 2018-2019 Microchip Technology Inc.

REGISTER 12-7: ADCON4L: ADC CONTROL REGISTER 4 LOW

U-0	U-0	U-0	U-0	U-0	U-0	r-0	r-0
—	—	—	—	—	—	—	—
bit 15							bit 8

U-0	U-0	U-0	U-0	U-0	U-0	R/W-0	R/W-0
—	—	—	—	—	—	SAMC1EN	SAMC0EN
bit 7							bit 0

Legend:	r = Reserved bit		
R = Readable bit	W = Writable bit	U = Unimplemented bit, read as ‘0’	
-n = Value at POR	‘1’ = Bit is set	‘0’ = Bit is cleared	x = Bit is unknown

bit 15-10 **Unimplemented:** Read as ‘0’

bit 9-8 **Reserved:** Must be written as ‘0’

bit 7-2 **Unimplemented:** Read as ‘0’

bit 1 **SAMC1EN:** Dedicated ADC Core 1 Conversion Delay Enable bit

1 = After trigger, the conversion will be delayed and the ADC core will continue sampling during the time specified by the SAMC[9:0] bits in the ADCORE1L register

0 = After trigger, the sampling will be stopped immediately and the conversion will be started on the next core clock cycle

bit 0 **SAMC0EN:** Dedicated ADC Core 0 Conversion Delay Enable bit

1 = After trigger, the conversion will be delayed and the ADC core will continue sampling during the time specified by the SAMC[9:0] bits in the ADCORE0L register

0 = After trigger, the sampling will be stopped immediately and the conversion will be started on the next core clock cycle

REGISTER 12-8: ADCON4H: ADC CONTROL REGISTER 4 HIGH

U-0	U-0	U-0	U-0	U-0	U-0	U-0	U-0
—	—	—	—	—	—	—	—
bit 15							bit 8

U-0	U-0	U-0	U-0	R/W-0	R/W-0	R/W-0	R/W-0
—	—	—	—	C1CHS1	C1CHS0	C0CHS1	C0CHS0
bit 7							bit 0

Legend:			
R = Readable bit	W = Writable bit	U = Unimplemented bit, read as ‘0’	
-n = Value at POR	‘1’ = Bit is set	‘0’ = Bit is cleared	x = Bit is unknown

bit 15-4 **Unimplemented:** Read as ‘0’

bit 3-2 **C1CHS[1:0]:** Dedicated ADC Core 1 Input Channel Selection bits
- 11 = Reserved
- 10 = Reserved
- 01 = ANA1
- 00 = AN1

bit 1-0 **C0CHS[1:0]:** Dedicated ADC Core 0 Input Channel Selection bits
- 11 = Reserved
- 10 = Reserved
- 01 = ANA0
- 00 = AN0

© 2018-2019 Microchip Technology Inc.

REGISTER 12-9: ADCON5L: ADC CONTROL REGISTER 5 LOW

HSC/R-0	U-0	U-0	U-0	U-0	U-0	HSC/R-0	HSC/R-0
SHRRDY	—	—	—	—	—	C1RDY	C0RDY
bit 15							bit 8

R/W-0	U-0	U-0	U-0	U-0	U-0	R/W-0	R/W-0
SHRPWR	—	—	—	—	—	C1PWR	C0PWR
bit 7							bit 0

Legend:	U = Unimplemented bit, read as ‘0’		
R = Readable bit	W = Writable bit	HSC = Hardware Settable/Clearable bit	
-n = Value at POR	‘1’ = Bit is set	‘0’ = Bit is cleared	x = Bit is unknown

bit 15 **SHRRDY:** Shared ADC Core Ready Flag bit
1 = ADC core is powered and ready for operation
0 = ADC core is not ready for operation

bit 14-10 **Unimplemented:** Read as ‘0’

bit 9 **C1RDY:** Dedicated ADC Core 1 Ready Flag bit
1 = ADC Core 1 is powered and ready for operation
0 = ADC Core 1 is not ready for operation

bit 8 **C0RDY:** Dedicated ADC Core 0 Ready Flag bit
1 = ADC Core 0 is powered and ready for operation
0 = ADC Core 0 is not ready for operation

bit 7 **SHRPWR:** Shared ADC Core Power Enable bit
1 = ADC core is powered
0 = ADC core is off

bit 6-2 **Unimplemented:** Read as ‘0’

bit 1 **C1PWR:** Dedicated ADC Core 1 Power Enable bit
1 = ADC Core 1 is powered
0 = ADC Core 1 is off

bit 0 **C0PWR:** Dedicated ADC Core 0 Power Enable bit
1 = ADC Core 0 is powered
0 = ADC Core 0 is off

REGISTER 12-10: ADCON5H: ADC CONTROL REGISTER 5 HIGH

U-0	U-0	U-0	U-0	R/W-0	R/W-0	R/W-0	R/W-0
—	—	—	—	WARMTIME3	WARMTIME2	WARMTIME1	WARMTIME0
bit 15							bit 8

R/W-0	U-0	U-0	U-0	U-0	U-0	R/W-0	R/W-0
SHRCIE	—	—	—	—	—	C1CIE	C0CIE
bit 7							bit 0

Legend:			
R = Readable bit	W = Writable bit	U = Unimplemented bit, read as ‘0’	
-n = Value at POR	‘1’ = Bit is set	‘0’ = Bit is cleared	x = Bit is unknown

bit 15-12 **Unimplemented:** Read as ‘0’

bit 11-8 **WARMTIME[3:0]:** ADC Dedicated Core x Power-up Delay bits

These bits determine the power-up delay in the number of the Core Source Clock Periods ($T_{CORESRC}$) for all ADC cores.

1111 = 32768 Source Clock Periods
1110 = 16384 Source Clock Periods
1101 = 8192 Source Clock Periods
1100 = 4096 Source Clock Periods
1011 = 2048 Source Clock Periods
1010 = 1024 Source Clock Periods
1001 = 512 Source Clock Periods
1000 = 256 Source Clock Periods
0111 = 128 Source Clock Periods
0110 = 64 Source Clock Periods
0101 = 32 Source Clock Periods
0100 = 16 Source Clock Periods
00xx = 16 Source Clock Periods

bit 7 **SHRCIE:** Shared ADC Core Ready Common Interrupt Enable bit

1 = Common interrupt will be generated when ADC core is powered and ready for operation
0 = Common interrupt is disabled for an ADC core ready event

bit 6-2 **Unimplemented:** Read as ‘0’

bit 1 **C1CIE:** Dedicated ADC Core 1 Ready Common Interrupt Enable bit

1 = Common interrupt will be generated when ADC Core 1 is powered and ready for operation
0 = Common interrupt is disabled for an ADC Core 1 ready event

bit 0 **C0CIE:** Dedicated ADC Core 0 Ready Common Interrupt Enable bit

1 = Common interrupt will be generated when ADC Core 0 is powered and ready for operation
0 = Common interrupt is disabled for an ADC Core 0 ready event

© 2018-2019 Microchip Technology Inc.

REGISTER 12-11: ADCORExL: DEDICATED ADC CORE x CONTROL REGISTER LOW (x = 0 TO 1)

U-0	U-0	U-0	U-0	U-0	U-0	R/W-0	R/W-0
—	—	—	—	—	—	SAMC[9:8]	
bit 15							bit 8

R/W-0	R/W-0	R/W-0	R/W-0	R/W-0	R/W-0	R/W-0	R/W-0
SAMC[7:0]							
bit 7							bit 0

Legend:			
R = Readable bit	W = Writable bit	U = Unimplemented bit, read as ‘0’	
-n = Value at POR	‘1’ = Bit is set	‘0’ = Bit is cleared	x = Bit is unknown

bit 15-10 **Unimplemented:** Read as ‘0’

bit 9-0 **SAMC[9:0]:** Dedicated ADC Core x Conversion Delay Selection bits

These bits determine the time between the trigger event and the start of conversion in the number of the Core Clock Periods (TADCORE). During this time, the ADC Core x still continues sampling. This feature is enabled by the SAMCxEN bits in the ADCON4L register.

1111111111 = 1025 TADCORE
. . .
0000000001 = 3 TADCORE
0000000000 = 2 TADCORE

REGISTER 12-12: ADCOREXH: DEDICATED ADC CORE x CONTROL REGISTER HIGH (x = 0 TO 1)

U-0	U-0	U-0	R/W-0	R/W-0	R/W-0	R/W-0	R/W-0
—	—	—	EISEL2	EISEL1	EISEL0	RES1	RES2
bit 15							bit 8

U-0	R/W-0	R/W-0	R/W-0	R/W-0	R/W-0	R/W-0	R/W-0
—	ADCS6(2)	ADCS5(2)	ADCS4(2)	ADCS3(2)	ADCS2(2)	ADCS1(2)	ADCS0(2)
bit 7							bit 0

Legend:			
R = Readable bit	W = Writable bit	U = Unimplemented bit, read as ‘0’	
-n = Value at POR	‘1’ = Bit is set	‘0’ = Bit is cleared	x = Bit is unknown

bit 15-13 **Unimplemented:** Read as ‘0’

bit 12-10 **EISEL[2:0]:** ADC Core x Early Interrupt Time Selection bits

111 = Early interrupt is set and an interrupt is generated eight TADCORE clocks prior to when the data is ready
110 = Early interrupt is set and an interrupt is generated seven TADCORE clocks prior to when the data is ready
101 = Early interrupt is set and an interrupt is generated six TADCORE clocks prior to when the data is ready
100 = Early interrupt is set and an interrupt is generated five TADCORE clocks prior to when the data is ready
011 = Early interrupt is set and an interrupt is generated four TADCORE clocks prior to when the data is ready
010 = Early interrupt is set and an interrupt is generated three TADCORE clocks prior to when the data is ready
001 = Early interrupt is set and an interrupt is generated two TADCORE clocks prior to when the data is ready
000 = Early interrupt is set and an interrupt is generated one TADCORE clock prior to when the data is ready

bit 9-8 **RES[1:0]:** ADC Core x Resolution Selection bits

11 = 12-bit resolution
10 = 10-bit resolution
01 = 8-bit resolution(1)
00 = 6-bit resolution(1)

bit 7 **Unimplemented:** Read as ‘0’

bit 6-0 **ADCS[6:0]:** ADC Core x Input Clock Divider bits(2)

These bits determine the number of Source Clock Periods (TCORESRC) for one Core Clock Period (TADCORE).
1111111 = 254 Source Clock Periods
...
0000011 = 6 Source Clock Periods
0000010 = 4 Source Clock Periods
0000001 = 2 Source Clock Periods
0000000 = 2 Source Clock Periods

Note 1: For the 6-bit ADC core resolution (RES[1:0] = 00), the EISEL[2:0] bits settings, from ‘100’ to ‘111’, are not valid and should not be used. For the 8-bit ADC core resolution (RES[1:0] = 01), the EISEL[2:0] bits settings, ‘110’ and ‘111’, are not valid and should not be used.

2: The ADC clock frequency, selected by the ADCS[6:0] bits, must not exceed 70 MHz.

© 2018-2019 Microchip Technology Inc.

REGISTER 12-13: ADLVLTRGL: ADC LEVEL-SENSITIVE TRIGGER CONTROL REGISTER LOW

R/W-0	R/W-0	R/W-0	R/W-0	R/W-0	R/W-0	R/W-0	R/W-0
LVLEN[15:8]							
bit 15							bit 8

R/W-0	R/W-0	R/W-0	R/W-0	R/W-0	R/W-0	R/W-0	R/W-0
LVLEN[7:0]							
bit 7							bit 0

Legend:			
R = Readable bit	W = Writable bit	U = Unimplemented bit, read as ‘0’	
-n = Value at POR	‘1’ = Bit is set	‘0’ = Bit is cleared	x = Bit is unknown

bit 15-0 **LVLEN[15:0]:** Level Trigger for Corresponding Analog Input Enable bits
1 = Input trigger is level-sensitive
0 = Input trigger is edge-sensitive

REGISTER 12-14: ADLVLTRGH: ADC LEVEL-SENSITIVE TRIGGER CONTROL REGISTER HIGH

U-0	U-0	U-0	U-0	U-0	U-0	U-0	U-0
—	—	—	—	—	—	—	—
bit 15							bit 8

U-0	U-0	U-0	R/W-0	R/W-0	R/W-0	R/W-0	R/W-0
—	—	—	LVLEN[20:16]				
bit 7							bit 0

Legend:			
R = Readable bit	W = Writable bit	U = Unimplemented bit, read as ‘0’	
-n = Value at POR	‘1’ = Bit is set	‘0’ = Bit is cleared	x = Bit is unknown

bit 15-5 **Unimplemented:** Read as ‘0’

bit 4-0 **LVLEN[20:16]:** Level Trigger for Corresponding Analog Input Enable bits
1 = Input trigger is level-sensitive
0 = Input trigger is edge-sensitive

REGISTER 12-15: ADEIEL: ADC EARLY INTERRUPT ENABLE REGISTER LOW

R/W-0	R/W-0	R/W-0	R/W-0	R/W-0	R/W-0	R/W-0	R/W-0
EIEN[15:8]							
bit 15							bit 8

R/W-0	R/W-0	R/W-0	R/W-0	R/W-0	R/W-0	R/W-0	R/W-0
EIEN[7:0]							
bit 7							bit 0

Legend:			
R = Readable bit	W = Writable bit	U = Unimplemented bit, read as ‘0’	
-n = Value at POR	‘1’ = Bit is set	‘0’ = Bit is cleared	x = Bit is unknown

bit 15-0 **EIEN[15:0]:** Early Interrupt Enable for Corresponding Analog Inputs bits
1 = Early interrupt is enabled for the channel
0 = Early interrupt is disabled for the channel

REGISTER 12-16: ADEIEH: ADC EARLY INTERRUPT ENABLE REGISTER HIGH

U-0	U-0	U-0	U-0	U-0	U-0	U-0	U-0
—	—	—	—	—	—	—	—
bit 15							bit 8

U-0	U-0	U-0	R/W-0	R/W-0	R/W-0	R/W-0	R/W-0
—	—	—	EIEN[20:16]				
bit 7							bit 0

Legend:			
R = Readable bit	W = Writable bit	U = Unimplemented bit, read as ‘0’	
-n = Value at POR	‘1’ = Bit is set	‘0’ = Bit is cleared	x = Bit is unknown

bit 15-5 **Unimplemented:** Read as ‘0’

bit 4-0 **EIEN[20:16]:** Early Interrupt Enable for Corresponding Analog Inputs bits
1 = Early interrupt is enabled for the channel
0 = Early interrupt is disabled for the channel

© 2018-2019 Microchip Technology Inc.

REGISTER 12-17: ADEISTATL: ADC EARLY INTERRUPT STATUS REGISTER LOW

R/W-0	R/W-0	R/W-0	R/W-0	R/W-0	R/W-0	R/W-0	R/W-0
EISTAT[15:8]							
bit 15							bit 8

R/W-0	R/W-0	R/W-0	R/W-0	R/W-0	R/W-0	R/W-0	R/W-0
EISTAT[7:0]							
bit 7							bit 0

Legend:			
R = Readable bit	W = Writable bit	U = Unimplemented bit, read as ‘0’	
-n = Value at POR	‘1’ = Bit is set	‘0’ = Bit is cleared	x = Bit is unknown

bit 15-0 **EISTAT[15:0]:** Early Interrupt Status for Corresponding Analog Inputs bits
1 = Early interrupt was generated
0 = Early interrupt was not generated since the last ADCBUFx read

REGISTER 12-18: ADEISTATH: ADC EARLY INTERRUPT STATUS REGISTER HIGH

U-0	U-0	U-0	U-0	U-0	U-0	U-0	U-0
—	—	—	—	—	—	—	—
bit 15							bit 8

U-0	U-0	U-0	R/W-0	R/W-0	R/W-0	R/W-0	R/W-0
—	—	—	EISTAT[20:16]				
bit 7							bit 0

Legend:			
R = Readable bit	W = Writable bit	U = Unimplemented bit, read as ‘0’	
-n = Value at POR	‘1’ = Bit is set	‘0’ = Bit is cleared	x = Bit is unknown

bit 15-5 **Unimplemented:** Read as ‘0’

bit 4-0 **EISTAT[20:16]:** Early Interrupt Status for Corresponding Analog Inputs bits
1 = Early interrupt was generated
0 = Early interrupt was not generated since the last ADCBUFx read

REGISTER 12-19: ADMOD0L: ADC INPUT MODE CONTROL REGISTER 0 LOW

R/W-0	R/W-0	R/W-0	R/W-0	R/W-0	R/W-0	R/W-0	R/W-0
DIFF7	SIGN7	DIFF6	SIGN6	DIFF5	SIGN5	DIFF4	SIGN4
bit 15							bit 8

R/W-0	R/W-0	R/W-0	R/W-0	R/W-0	R/W-0	R/W-0	R/W-0
DIFF3	SIGN3	DIFF2	SIGN2	DIFF1	SIGN1	DIFF0	SIGN0
bit 7							bit 0

Legend:			
R = Readable bit	W = Writable bit	U = Unimplemented bit, read as ‘0’	
-n = Value at POR	‘1’ = Bit is set	‘0’ = Bit is cleared	x = Bit is unknown

bit 15 through bit 1 (odd) **DIFF[1:0]:** Differential-Mode for Corresponding Analog Inputs bits
1 = Channel is differential
0 = Channel is single-ended

bit 14 through bit 0 (even) **SIGN[1:0]:** Output Data Sign for Corresponding Analog Inputs bits
1 = Channel output data is signed
0 = Channel output data is unsigned

REGISTER 12-20: ADMOD0H: ADC INPUT MODE CONTROL REGISTER 0 HIGH

R/W-0	R/W-0	R/W-0	R/W-0	R/W-0	R/W-0	R/W-0	R/W-0
DIFF15	SIGN15	DIFF14	SIGN14	DIFF13	SIGN13	DIFF12	SIGN12
bit 15							bit 8

R/W-0	R/W-0	R/W-0	R/W-0	R/W-0	R/W-0	R/W-0	R/W-0
DIFF11	SIGN11	DIFF10	SIGN10	DIFF9	SIGN9	DIFF8	SIGN8
bit 7							bit 0

Legend:			
R = Readable bit	W = Writable bit	U = Unimplemented bit, read as ‘0’	
-n = Value at POR	‘1’ = Bit is set	‘0’ = Bit is cleared	x = Bit is unknown

bit 15 through bit 1 (odd) **DIFF[15:8]:** Differential-Mode for Corresponding Analog Inputs bits
1 = Channel is differential
0 = Channel is single-ended

bit 14 through bit 0 (even) **SIGN[15:8]:** Output Data Sign for Corresponding Analog Inputs bits
1 = Channel output data is signed
0 = Channel output data is unsigned

© 2018-2019 Microchip Technology Inc.

REGISTER 12-21: ADMOD1L: ADC INPUT MODE CONTROL REGISTER 1 LOW

U-0	U-0	U-0	U-0	U-0	U-0	R/W-0	R/W-0
—	—	—	—	—	—	DIFF20	SIGN20
bit 15							bit 8

R/W-0	R/W-0	R/W-0	R/W-0	R/W-0	R/W-0	R/W-0	R/W-0
DIFF19	SIGN19	DIFF18	SIGN18	DIFF17	SIGN17	DIFF16	SIGN16
bit 7							bit 0

Legend:			
R = Readable bit	W = Writable bit	U = Unimplemented bit, read as ‘0’	
-n = Value at POR	‘1’ = Bit is set	‘0’ = Bit is cleared	x = Bit is unknown

bit 15 through bit 1 (odd) **DIFF[20:16]:** Differential-Mode for Corresponding Analog Inputs bits
`1` = Channel is differential
`0` = Channel is single-ended

bit 14 through bit 0 (even) **SIGN[20:16]:** Output Data Sign for Corresponding Analog Inputs bits
`1` = Channel output data is signed
`0` = Channel output data is unsigned

REGISTER 12-22: ADIEL: ADC INTERRUPT ENABLE REGISTER LOW

R/W-0	R/W-0	R/W-0	R/W-0	R/W-0	R/W-0	R/W-0	R/W-0
IE[15:8]							
bit 15							bit 8

R/W-0	R/W-0	R/W-0	R/W-0	R/W-0	R/W-0	R/W-0	R/W-0
IE[7:0]							
bit 7							bit 0

Legend:			
R = Readable bit	W = Writable bit	U = Unimplemented bit, read as ‘0’	
-n = Value at POR	‘1’ = Bit is set	‘0’ = Bit is cleared	x = Bit is unknown

bit 15-0 **IE[15:0]:** Common Interrupt Enable bits
1 = Common and individual interrupts are enabled for the corresponding channel
0 = Common and individual interrupts are disabled for the corresponding channel

REGISTER 12-23: ADIEH: ADC INTERRUPT ENABLE REGISTER HIGH

U-0	U-0	U-0	U-0	U-0	U-0	U-0	U-0
—	—	—	—	—	—	—	—
bit 15							bit 8

U-0	U-0	U-0	R/W-0	R/W-0	R/W-0	R/W-0	R/W-0
—	—	—	IE[20:16]				
bit 7							bit 0

Legend:			
R = Readable bit	W = Writable bit	U = Unimplemented bit, read as ‘0’	
-n = Value at POR	‘1’ = Bit is set	‘0’ = Bit is cleared	x = Bit is unknown

bit 15-5 **Unimplemented:** Read as ‘0’

bit 4-0 **IE[20:16]:** Common Interrupt Enable bits
1 = Common and individual interrupts are enabled for the corresponding channel
0 = Common and individual interrupts are disabled for the corresponding channel

© 2018-2019 Microchip Technology Inc.

REGISTER 12-24: ADSTATL: ADC DATA READY STATUS REGISTER LOW

HSC/R-0	HSC/R-0	HSC/R-0	HSC/R-0	HSC/R-0	HSC/R-0	HSC/R-0	HSC/R-0
AN[15:8]RDY							
bit 15							bit 8

HSC/R-0	HSC/R-0	HSC/R-0	HSC/R-0	HSC/R-0	HSC/R-0	HSC/R-0	HSC/R-0
AN[7:0]RDY							
bit 7							bit 0

Legend:	U = Unimplemented bit, read as ‘0’		
R = Readable bit	W = Writable bit	HSC = Hardware Settable/Clearable bit	
-n = Value at POR	‘1’ = Bit is set	‘0’ = Bit is cleared	x = Bit is unknown

bit 15-0 **AN[15:0]RDY:** Common Interrupt Enable for Corresponding Analog Inputs bits
1 = Channel conversion result is ready in the corresponding ADCBUFx register
0 = Channel conversion result is not ready

REGISTER 12-25: ADSTATH: ADC DATA READY STATUS REGISTER HIGH

U-0	U-0	U-0	U-0	U-0	U-0	U-0	U-0
—	—	—	—	—	—	—	—
bit 15							bit 8

U-0	U-0	U-0	HSC/R-0	HSC/R-0	HSC/R-0	HSC/R-0	HSC/R-0
—	—	—	AN[20:16]RDY				
bit 7							bit 0

Legend:	U = Unimplemented bit, read as ‘0’		
R = Readable bit	W = Writable bit	HSC = Hardware Settable/Clearable bit	
-n = Value at POR	‘1’ = Bit is set	‘0’ = Bit is cleared	x = Bit is unknown

bit 15-5 **Unimplemented:** Read as ‘0’

bit 4-0 **AN[20:16]RDY:** Common Interrupt Enable for Corresponding Analog Inputs bits
1 = Channel conversion result is ready in the corresponding ADCBUFx register
0 = Channel conversion result is not ready

REGISTER 12-26: ADTRIGnL/ADTRIGnH: ADC CHANNEL TRIGGER n(x) SELECTION REGISTERS LOW AND HIGH (x = 0 TO 20; n = 0 TO 6)

U-0	U-0	U-0	R/W-0	R/W-0	R/W-0	R/W-0	R/W-0
—	—	—	TRGSRC(x+1)4	TRGSRC(x+1)3	TRGSRC(x+1)2	TRGSRC(x+1)1	TRGSRC(x+1)0
bit 15							bit 8

U-0	U-0	U-0	R/W-0	R/W-0	R/W-0	R/W-0	R/W-0
—	—	—	TRGSRCx4	TRGSRCx3	TRGSRCx2	TRGSRCx1	TRGSRCx0
bit 7							bit 0

Legend:			
R = Readable bit	W = Writable bit	U = Unimplemented bit, read as ‘0’	
-n = Value at POR	‘1’ = Bit is set	‘0’ = Bit is cleared	x = Bit is unknown

bit 15-13 **Unimplemented:** Read as ‘0’

bit 12-8 **TRGSRC(x+1)[4:0]:** Trigger Source Selection for Corresponding Analog Inputs bits (TRGSRC1 to TRGSRC19 – Odd)

11111 = ADTRG31 (PPS input)
11110 = PTG12
11101 = CLC2
11100 = CLC1
11011 = Reserved
11010 = Reserved
11001 = Reserved
11000 = MCCP5 CCP Interrupt
10111 = SCCP4 CCP Interrupt
10110 = SCCP3 CCP Interrupt
10101 = SCCP2 CCP Interrupt
10100 = SCCP1 CCP Interrupt
10011 = Reserved
10010 = CLC4 Output
10001 = CLC3 Output
10000 = MCCP5 Trigger
01111 = SCCP4 Trigger
01110 = SCCP3 Trigger
01101 = SCCP2 Trigger
01100 = SCCP1 Trigger
01011 = PWM4 Trigger 2
01010 = PWM4 Trigger 1
01001 = PWM3 Trigger 2
01000 = PWM3 Trigger 1
00111 = PWM2 Trigger 2
00110 = PWM2 Trigger 1
00101 = PWM1 Trigger 2
00100 = PWM1 Trigger 1
00011 = Reserved
00010 = Level software trigger
00001 = Common software trigger
00000 = No trigger is enabled

bit 7-5 **Unimplemented:** Read as ‘0’

© 2018-2019 Microchip Technology Inc.

REGISTER 12-26: ADTRIGnL/ADTRIGnH: ADC CHANNEL TRIGGER n(x) SELECTION REGISTERS LOW AND HIGH (x = 0 TO 20; n = 0 TO 6) (CONTINUED)

bit 4-0 **TRGSRCx[4:0]:** Common Interrupt Enable for Corresponding Analog Inputs bits (TRGSRC0 to TRGSRC20 – Even)

`11111` = ADTRG31 (PPS input)
`11110` = PTG12
`11101` = CLC2
`11100` = CLC1
`11011` = Reserved
`11010` = Reserved
`11001` = Reserved
`11000` = MCCP5 CCP Interrupt
`10111` = SCCP4 CCP Interrupt
`10110` = SCCP3 CCP Interrupt
`10101` = SCCP2 CCP Interrupt
`10100` = SCCP1 CCP Interrupt
`10011` = Reserved
`10010` = CLC4 Output
`10001` = CLC3 Output
`10000` = MCCP5 Trigger
`01111` = SCCP4 Trigger
`01110` = SCCP3 Trigger
`01101` = SCCP2 Trigger
`01100` = SCCP1 Trigger
`01011` = PWM4 Trigger 2
`01010` = PWM4 Trigger 1
`01001` = PWM3 Trigger 2
`01000` = PWM3 Trigger 1
`00111` = PWM2 Trigger 2
`00110` = PWM2 Trigger 1
`00101` = PWM1 Trigger 2
`00100` = PWM1 Trigger 1
`00011` = Reserved
`00010` = Level software trigger
`00001` = Common software trigger
`00000` = No trigger is enabled

REGISTER 12-27: ADCMPxCON: ADC DIGITAL COMPARATOR x CONTROL REGISTER (x = 0, 1, 2, 3)

U-0	U-0	U-0	HSC/R-0	HSC/R-0	HSC/R-0	HSC/R-0	HSC/R-0
—	—	—	CHNL4	CHNL3	CHNL2	CHNL1	CHNL0
bit 15							bit 8

R/W-0	R/W-0	HC/HS/R-0	R/W-0	R/W-0	R/W-0	R/W-0	R/W-0
CMPEN	IE	STAT	BTWN	HIHI	HILO	LOHI	LOLO
bit 7							bit 0

Legend:	HC = Hardware Clearable bit	U = Unimplemented bit, read as ‘0’	
R = Readable bit	W = Writable bit	HSC = Hardware Settable/Clearable bit	
-n = Value at POR	‘1’ = Bit is set	‘0’ = Bit is cleared	HS = Hardware Settable bit

bit 15-13 **Unimplemented:** Read as ‘0’

bit 12-8 **CHNL[4:0]:** Input Channel Number bits
If the comparator has detected an event for a channel, this channel number is written to these bits.
11111 = Reserved
...
10101 = Reserved
10100 = Band gap, 1.2V (AN20)
10011 = Temperature sensor (AN19)
10010 = AN18
...
00011 = AN3
00010 = AN2
00001 = AN1
00000 = AN0

bit 7 **CMPEN:** Comparator Enable bit
1 = Comparator is enabled
0 = Comparator is disabled and the STAT status bit is cleared

bit 6 **IE:** Comparator Common ADC Interrupt Enable bit
1 = Common ADC interrupt will be generated if the comparator detects a comparison event
0 = Common ADC interrupt will not be generated for the comparator

bit 5 **STAT:** Comparator Event Status bit
This bit is cleared by hardware when the channel number is read from the CHNL[4:0] bits.
1 = A comparison event has been detected since the last read of the CHNL[4:0] bits
0 = A comparison event has not been detected since the last read of the CHNL[4:0] bits

bit 4 **BTWN:** Between Low/High Comparator Event bit
1 = Generates a comparator event when ADCMPxLO ≤ ADCBUFx < ADCMPxHI
0 = Does not generate a digital comparator event when ADCMPxLO ≤ ADCBUFx < ADCMPxHI

bit 3 **HIHI:** High/High Comparator Event bit
1 = Generates a digital comparator event when ADCBUFx ≥ ADCMPxHI
0 = Does not generate a digital comparator event when ADCBUFx ≥ ADCMPxHI

bit 2 **HILO:** High/Low Comparator Event bit
1 = Generates a digital comparator event when ADCBUFx < ADCMPxHI
0 = Does not generate a digital comparator event when ADCBUFx < ADCMPxHI

bit 1 **LOHI:** Low/High Comparator Event bit
1 = Generates a digital comparator event when ADCBUFx ≥ ADCMPxLO
0 = Does not generate a digital comparator event when ADCBUFx ≥ ADCMPxLO

bit 0 **LOLO:** Low/Low Comparator Event bit
1 = Generates a digital comparator event when ADCBUFx < ADCMPxLO
0 = Does not generate a digital comparator event when ADCBUFx < ADCMPxLO

© 2018-2019 Microchip Technology Inc.

REGISTER 12-28: ADCMPxENL: ADC DIGITAL COMPARATOR x CHANNEL ENABLE REGISTER LOW (x = 0 or 3)

R/W-0	R/W-0	R/W-0	R/W-0	R/W-0	R/W-0	R/W-0	R/W-0
CMPEN[15:8]							
bit 15							bit 8

R/W/0	R/W-0	R/W-0	R/W-0	R/W-0	R/W-0	R/W-0	R/W-0
CMPEN[7:0]							
bit 7							bit 0

Legend:			
R = Readable bit	W = Writable bit	U = Unimplemented bit, read as ‘0’	
-n = Value at POR	‘1’ = Bit is set	‘0’ = Bit is cleared	x = Bit is unknown

bit 15-0 **CMPEN[15:0]:** Comparator Enable for Corresponding Input Channels bits
1 = Conversion result for corresponding channel is used by the comparator
0 = Conversion result for corresponding channel is not used by the comparator

REGISTER 12-29: ADCMPxENH: ADC DIGITAL COMPARATOR x CHANNEL ENABLE REGISTER HIGH (x = 0 or 3)

U-0	U-0	U-0	U-0	U-0	U-0	U-0	R/W-0
—	—	—	—	—	—	—	—
bit 15							bit 8

U-0	U-0	U-0	R/W-0	R/W-0	R/W-0	R/W-0	R/W-0
—	—	—	CMPEN[20:16]				
bit 7							bit 0

Legend:			
R = Readable bit	W = Writable bit	U = Unimplemented bit, read as ‘0’	
-n = Value at POR	‘1’ = Bit is set	‘0’ = Bit is cleared	x = Bit is unknown

bit 15-5 **Unimplemented:** Read as ‘0’

bit 4-0 **CMPEN[20:16]:** Comparator Enable for Corresponding Input Channels bits
1 = Conversion result for corresponding channel is used by the comparator
0 = Conversion result for corresponding channel is not used by the comparator

REGISTER 12-30: ADFLxCON: ADC DIGITAL FILTER x CONTROL REGISTER (x = 0 or 3)

R/W-0	R/W-0	R/W-0	R/W-0	R/W-0	R/W-0	R/W-0	HSC/R-0
FLEN	MODE1	MODE0	OVRSAM2	OVRSAM1	OVRSAM0	IE	RDY
bit 15							bit 8

U-0	U-0	U-0	R/W-0	R/W-0	R/W-0	R/W-0	R/W-0
—	—	—	FLCHSEL4	FLCHSEL3	FLCHSEL2	FLCHSEL1	FLCHSEL0
bit 7							bit 0

Legend:	U = Unimplemented bit, read as ‘0’		
R = Readable bit	W = Writable bit	HSC = Hardware Settable/Clearable bit	
-n = Value at POR	‘1’ = Bit is set	‘0’ = Bit is cleared	x = Bit is unknown

bit 15 **FLEN:** Filter Enable bit
1 = Filter is enabled
0 = Filter is disabled and the RDY bit is cleared

bit 14-13 **MODE[1:0]:** Filter Mode bits
11 = Averaging mode
10 = Reserved
01 = Reserved
00 = Oversampling mode

bit 12-10 **OVRSAM[2:0]:** Filter Averaging/Oversampling Ratio bits
If MODE[1:0] = 00:
111 = 128x (16-bit result in the ADFLxDAT register is in 12.4 format)
110 = 32x (15-bit result in the ADFLxDAT register is in 12.3 format)
101 = 8x (14-bit result in the ADFLxDAT register is in 12.2 format)
100 = 2x (13-bit result in the ADFLxDAT register is in 12.1 format)
011 = 256x (16-bit result in the ADFLxDAT register is in 12.4 format)
010 = 64x (15-bit result in the ADFLxDAT register is in 12.3 format)
001 = 16x (14-bit result in the ADFLxDAT register is in 12.2 format)
000 = 4x (13-bit result in the ADFLxDAT register is in 12.1 format)
If MODE[1:0] = 11 (12-bit result in the ADFLxDAT register in all instances):
111 = 256x
110 = 128x
101 = 64x
100 = 32x
011 = 16x
110 = 8x
001 = 4x
000 = 2x

bit 9 **IE:** Filter Common ADC Interrupt Enable bit
1 = Common ADC interrupt will be generated when the filter result will be ready
0 = Common ADC interrupt will not be generated for the filter

bit 8 **RDY:** Oversampling Filter Data Ready Flag bit
This bit is cleared by hardware when the result is read from the ADFLxDAT register.
1 = Data in the ADFLxDAT register is ready
0 = The ADFLxDAT register has been read and new data in the ADFLxDAT register is not ready

bit 7-5 **Unimplemented:** Read as ‘0’

© 2018-2019 Microchip Technology Inc.

REGISTER 12-30: ADFLxCON: ADC DIGITAL FILTER x CONTROL REGISTER (x = 0 or 3) (CONTINUED)

bit 4-0 **FLCHSEL[4:0]:** Oversampling Filter Input Channel Selection bits

`11111` = Reserved
`...`
`10101` = Reserved
`10100` = Band gap, 1.2V (AN20)
`10011` = Temperature sensor (AN19)
`10010` = AN18
`...`
`00011` = AN3
`00010` = AN2
`00001` = AN1
`00000` = AN0

NOTES:

© 2018-2019 Microchip Technology Inc.

13.0 HIGH-SPEED ANALOG COMPARATOR WITH SLOPE COMPENSATION DAC

Note 1: This data sheet summarizes the features of the dsPIC33CK64MP105 family of devices. It is not intended to be a comprehensive reference source. To complement the information in this data sheet, refer to **"High-Speed Analog Comparator Module"** (www.microchip.com/DS70005280) in the *"dsPIC33/PIC24 Family Reference Manual"*.

The high-speed analog comparator module provides a method to monitor voltage, current and other critical signals in a power conversion application that may be too fast for the CPU and ADC to capture. There are a total of three comparator modules. The analog comparator module can be used to implement Peak Current mode control, Critical Conduction mode (variable frequency) and Hysteretic Control mode.

13.1 Overview

The high-speed analog comparator module is comprised of a high-speed comparator, Pulse Density Modulation (PDM) DAC and a slope compensation unit. The slope compensation unit provides a user-defined slope which can be used to alter the DAC output. This feature is useful in applications, such as Peak Current mode control, where slope compensation is required to maintain the stability of the power supply. The user simply specifies the direction and rate of change for the slope compensation and the output of the DAC is modified accordingly.

The DAC consists of a PDM unit, followed by a digitally controlled multiphase RC filter. The PDM unit uses a phase accumulator circuit to generate an output stream of pulses. The density of the pulse stream is proportional to the input data value, relative to the maximum value supported by the bit width of the accumulator. The output pulse density is representative of the desired output voltage. The pulse stream is filtered with an RC filter to yield an analog voltage. The output of the DAC is connected to the negative input of the comparator. The positive input of the comparator can be selected using a MUX from either of the input pins. The comparator provides a high-speed operation with a typical delay of 15 ns.

The output of the comparator is processed by the pulse stretcher and the digital filter blocks, which prevent comparator response to unintended fast transients in the inputs. Figure 13-1 shows a block diagram of the high-speed analog comparator module. The DAC module can be operated in one of three modes: Slope Generation mode, Hysteretic mode and Triangle Wave mode. Each of these modes can be used in a variety of power supply applications.

Note: The DACOUT1 pin can only be associated with a single DAC output at any given time. If more than one DACOEN bit is set, the DACOUT1 pin will be a combination of the signals.

FIGURE 13-1: HIGH-SPEED ANALOG COMPARATOR MODULE BLOCK DIAGRAM

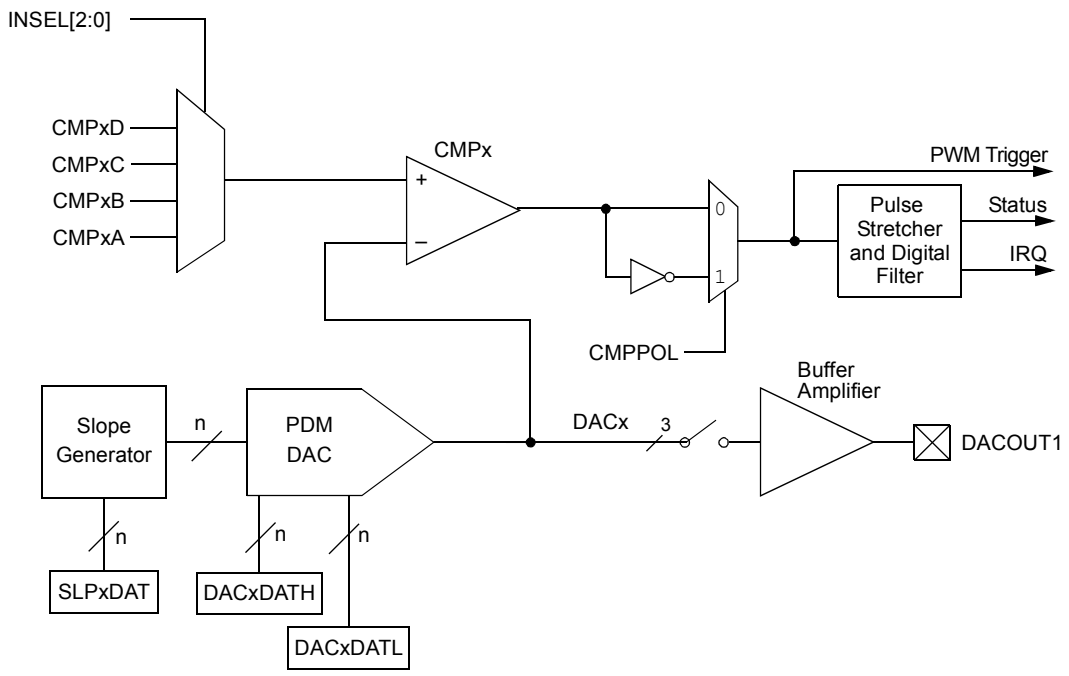

Note: n = 16

© 2018-2019 Microchip Technology Inc.

13.2 Features Overview

- Three Rail-to-Rail Analog Comparators
- Up to Four Selectable Input Sources per Comparator
- Programmable Comparator Hysteresis
- Programmable Output Polarity
- Interrupt Generation Capability
- Dedicated Pulse Density Modulation DAC for each Analog Comparator:
  - PDM unit followed by a digitally controlled multimode multipole RC filter
- Multimode Multipole RC Output Filter:
  - Transition mode: Provides the fastest response
  - Fast mode: For tracking DAC slopes
  - Steady-State mode: Provides 12-bit resolution
- Slope Compensation along with each DAC:
  - Slope Generation mode
  - Hysteretic Control mode
  - Triangle Wave mode
- Functional Support for the High-Speed PWM module which Includes:
  - PWM duty cycle control
  - PWM period control
  - PWM Fault detect

13.3 Control Registers

The DACCTRL1L and DACCTRL2H/L registers are common configuration registers for DAC modules.

The DACxCON, DACxDAT, SLPxCON and SLPxDAT registers specify the operation of individual modules.

REGISTER 13-1: DACCTRL1L: DAC CONTROL 1 LOW REGISTER

R/W-0	U-0	R/W-0	U-0	U-0	U-0	U-0	U-0
DACON	—	DACSIDL	—	—	—	—	—
bit 15							bit 8

R/W-0	R/W-0	R/W-0	R/W-0	U-0	R/W-0	R/W-0	R/W-0
CLKSEL1(1,3)	CLKSEL0(1,3)	CLKDIV1(1,3)	CLKDIV0(1,3)	—	FCLKDIV2(2)	FCLKDIV1(2)	FCLKDIV0(2)
bit 7							bit 0

Legend:		
R = Readable bit	W = Writable bit	U = Unimplemented bit, read as ‘0’
-n = Value at POR	‘1’ = Bit is set	‘0’ = Bit is cleared

bit 15 **DACON:** Common DAC Module Enable bit
- 1 = Enables DAC modules
- 0 = Disables DAC modules and disables FSCM clocks to reduce power consumption; any pending Slope mode and/or underflow conditions are cleared

bit 14 **Unimplemented:** Read as ‘0’

bit 13 **DACSIDL:** DAC Stop in Idle Mode bit
- 1 = Discontinues module operation when device enters Idle mode
- 0 = Continues module operation in Idle mode

bit 12-8 **Unimplemented:** Read as ‘0’

bit 7-6 **CLKSEL[1:0]:** DAC Clock Source Select bits(1,3)
- 11 = F_{PLLO}
- 10 = AF_{PLLO}
- 01 = $F_{VCO}/2$
- 00 = $AF_{VCO}/2$

bit 5-4 **CLKDIV[1:0]:** DAC Clock Divider bits(1,3)
- 11 = Divide-by-4
- 10 = Divide-by-3 (non-uniform duty cycle)
- 01 = Divide-by-2
- 00 = 1x

bit 3 **Unimplemented:** Read as ‘0’

bit 2-0 **FCLKDIV[2:0]:** Comparator Filter Clock Divider bits(2)
- 111 = Divide-by-8
- 110 = Divide-by-7
- 101 = Divide-by-6
- 100 = Divide-by-5
- 011 = Divide-by-4
- 010 = Divide-by-3
- 001 = Divide-by-2
- 000 = 1x

Note 1: These bits should only be changed when DACON = 0 to avoid unpredictable behavior.
2: The input clock to this divider is the selected clock input, CLKSEL[1:0], and then divided by 2.
3: Clock source and dividers should yield an effective DAC clock input of 500 MHz.

© 2018-2019 Microchip Technology Inc.

REGISTER 13-2: DACCTRL2H: DAC CONTROL 2 HIGH REGISTER

U-0	U-0	U-0	U-0	U-0	U-0	R/W-0	R/W-0
—	—	—	—	—	—	SSTIME[9:8](1)	
bit 15							bit 8

R/W-1	R/W-0	R/W-0	R/W-0	R/W-1	R/W-0	R/W-1	R/W-0
SSTIME[7:0](1)							
bit 7							bit 0

Legend:		
R = Readable bit	W = Writable bit	U = Unimplemented bit, read as ‘0’
-n = Value at POR	‘1’ = Bit is set	‘0’ = Bit is cleared

bit 15-10 **Unimplemented:** Read as ‘0’

bit 9-0 **SSTIME[9:0]:** Time from Start of Transition Mode until Steady-State Filter is Enabled bits(1)

Note 1: The value for SSTIME[9:0] should be greater than the TMODTIME[9:0] value.

REGISTER 13-3: DACCTRL2L: DAC CONTROL 2 LOW REGISTER

U-0	U-0	U-0	U-0	U-0	U-0	R/W-0	R/W-0
—	—	—	—	—	—	TMODTIME[9:8](1)	
bit 15							bit 8

R/W-0	R/W-1	R/W-0	R/W-1	R/W-0	R/W-1	R/W-0	R/W-1
TMODTIME[7:0](1)							
bit 7							bit 0

Legend:		
R = Readable bit	W = Writable bit	U = Unimplemented bit, read as ‘0’
-n = Value at POR	‘1’ = Bit is set	‘0’ = Bit is cleared

bit 15-10 **Unimplemented:** Read as ‘0’

bit 9-0 **TMODTIME[9:0]:** Transition Mode Duration bits(1)

Note 1: The value for TMODTIME[9:0] should be less than the SSTIME[9:0] value.

REGISTER 13-4: DACxCONH: DACx CONTROL HIGH REGISTER

U-0	U-0	U-0	U-0	U-0	U-0	R/W-0	R/W-0
—	—	—	—	—	—	TMCB[9:8]	
bit 15							bit 8

R/W-0	R/W-0	R/W-0	R/W-0	R/W-0	R/W-0	R/W-0	R/W-0
TMCB[7:0]							
bit 7							bit 0

Legend:		
R = Readable bit	W = Writable bit	U = Unimplemented bit, read as ‘0’
-n = Value at POR	‘1’ = Bit is set	‘0’ = Bit is cleared

bit 15-10 **Unimplemented:** Read as ‘0’

bit 9-0 **TMCB[9:0]:** DACx Leading-Edge Blanking bits

These register bits specify the blanking period for the comparator, following changes to the DAC output during Change-of-State (COS), for the input signal selected by the HCFSEL[3:0] bits in Register 13-9.

REGISTER 13-5: DACxCONL: DACx CONTROL LOW REGISTER

R/W-0	R/W-0	R/W-0	U-0	U-0	R/W-0	R/W-0	R/W-0
DACEN	IRQM1(1,2)	IRQM0(1,2)	—	—	CBE	DACOEN	FLTREN
bit 15							bit 8

R/W-0	R/W-0	R/W-0	R/W-0	R/W-0	R/W-0	R/W-0	R/W-0
CMPSTAT	CMPPOL	INSEL2	INSEL1	INSEL0	HYSPOL	HYSSEL1	HYSSEL0
bit 7							bit 0

Legend:		
R = Readable bit	W = Writable bit	U = Unimplemented bit, read as ‘0’
-n = Value at POR	‘1’ = Bit is set	‘0’ = Bit is cleared

bit 15 **DACEN:** Individual DACx Module Enable bit

1 = Enables DACx module
0 = Disables DACx module to reduce power consumption; any pending Slope mode and/or underflow conditions are cleared

bit 14-13 **IRQM[1:0]:** Interrupt Mode select bits(1,2)

11 = Generates an interrupt on either a rising or falling edge detect
10 = Generates an interrupt on a falling edge detect
01 = Generates an interrupt on a rising edge detect
00 = Interrupts are disabled

bit 12-11 **Unimplemented:** Read as ‘0’

Note 1: Changing these bits during operation may generate a spurious interrupt.
2: The edge selection is a post-polarity selection via the CMPPOL bit.

© 2018-2019 Microchip Technology Inc.

REGISTER 13-5: DACxCONL: DACx CONTROL LOW REGISTER (CONTINUED)

bit 10 **CBE:** Comparator Blank Enable bit
1 = Enables the analog comparator output to be blanked (gated off) during the recovery transition following the completion of a slope operation
0 = Disables the blanking signal to the analog comparator; therefore, the analog comparator output is always active

bit 9 **DACOEN:** DACx Output Buffer Enable bit
1 = DACx analog voltage is connected to the DACOUT pin
0 = DACx analog voltage is not connected to the DACOUT pin

bit 8 **FLTREN:** Comparator Digital Filter Enable bit
1 = Digital filter is enabled
0 = Digital filter is disabled

bit 7 **CMPSTAT:** Comparator Status bits
The current state of the comparator output including the CMPPOL selection.

bit 6 **CMPPOL:** Comparator Output Polarity Control bit
1 = Output is inverted
0 = Output is non-inverted

bit 5-3 **INSEL[2:0]:** Comparator Input Source Select bits
111 = Reserved
110 = Reserved
101 = Reserved
100 = Reserved
011 = CMPxD input pin
010 = CMPxC input pin
001 = CMPxB input pin
000 = CMPxA input pin

bit 2 **HYSPOL:** Comparator Hysteresis Polarity Select bit
1 = Hysteresis is applied to the falling edge of the comparator output
0 = Hysteresis is applied to the rising edge of the comparator output

bit 1-0 **HYSSEL[1:0]:** Comparator Hysteresis Select bits
11 = 45 mv hysteresis
10 = 30 mv hysteresis
01 = 15 mv hysteresis
00 = No hysteresis is selected

Note 1: Changing these bits during operation may generate a spurious interrupt.
2: The edge selection is a post-polarity selection via the CMPPOL bit.

REGISTER 13-6: DACxDATH: DACx DATA HIGH REGISTER

U-0	U-0	U-0	U-0	R/W-0	R/W-0	R/W-0	R/W-0
—	—	—	—	DACDATH[11:8]			
bit 15							bit 8

R/W-0	R/W-0	R/W-0	R/W-0	R/W-0	R/W-0	R/W-0	R/W-0
DACDATH[7:0]							
bit 7							bit 0

Legend:		
R = Readable bit	W = Writable bit	U = Unimplemented bit, read as ‘0’
-n = Value at POR	‘1’ = Bit is set	‘0’ = Bit is cleared

bit 15-12 **Unimplemented:** Read as ‘0’

bit 11-0 **DACDATH[11:0]:** DACx Data bits
This register specifies the high DACx data value. Valid values are from 205 to 3890.

REGISTER 13-7: DACxDATL: DACx DATA LOW REGISTER

U-0	U-0	U-0	U-0	R/W-0	R/W-0	R/W-0	R/W-0
—	—	—	—	DACDATL[11:8]			
bit 15							bit 8

R/W-0	R/W-0	R/W-0	R/W-0	R/W-0	R/W-0	R/W-0	R/W-0
DACDATL[7:0]							
bit 7							bit 0

Legend:		
R = Readable bit	W = Writable bit	U = Unimplemented bit, read as ‘0’
-n = Value at POR	‘1’ = Bit is set	‘0’ = Bit is cleared

bit 15-12 **Unimplemented:** Read as ‘0’

bit 11-0 **DACDATL[11:0]:** DACx Low Data bits
In Hysteretic mode, Slope Generator mode and Triangle mode, this register specifies the low data value and/or limit for the DACx module. Valid values are from 205 to 3890.

© 2018-2019 Microchip Technology Inc.

REGISTER 13-8: SLPxCONH: DACx SLOPE CONTROL HIGH REGISTER

R/W-0	U-0	U-0	U-0	R/W-0	R/W-0	R/W-0	U-0
SLOPEN	—	—	—	HME(1)	TWME(2)	PSE	—
bit 15							bit 8

U-0	U-0	U-0	U-0	U-0	U-0	U-0	U-0
—	—	—	—	—	—	—	—
bit 7							bit 0

Legend:		
R = Readable bit	W = Writable bit	U = Unimplemented bit, read as ‘0’
-n = Value at POR	‘1’ = Bit is set	‘0’ = Bit is cleared

bit 15 **SLOPEN:** Slope Function Enable/On bit
1 = Enables slope function
0 = Disables slope function; slope accumulator is disabled to reduce power consumption

bit 14-12 **Unimplemented:** Read as ‘0’

bit 11 **HME:** Hysteretic Mode Enable bit(1)
1 = Enables Hysteretic mode for DACx
0 = Disables Hysteretic mode for DACx

bit 10 **TWME:** Triangle Wave Mode Enable bit(2)
1 = Enables Triangle Wave mode for DACx
0 = Disables Triangle Wave mode for DACx

bit 9 **PSE:** Positive Slope Mode Enable bit
1 = Slope mode is positive (increasing)
0 = Slope mode is negative (decreasing)

bit 8-0 **Unimplemented:** Read as ‘0’

Note 1: HME mode requires the user to disable the slope function (SLOPEN = 0).
2: TWME mode requires the user to enable the slope function (SLOPEN = 1).

REGISTER 13-9: SLPxCONL: DACx SLOPE CONTROL LOW REGISTER

R/W-0	R/W-0	R/W-0	R/W-0	R/W-0	R/W-0	R/W-0	R/W-0
HCFSEL3	HCFSEL2	HCFSEL1	HCFSEL0	SLPSTOPA3	SLPSTOPA2	SLPSTOPA1	SLPSTOPA0
bit 15							bit 8

R/W-0	R/W-0	R/W-0	R/W-0	R/W-0	R/W-0	R/W-0	R/W-0
SLPSTOPB3	SLPSTOPB2	SLPSTOPB1	SLPSTOPB0	SLPSTRT3	SLPSTRT2	SLPSTRT1	SLPSTRT0
bit 7							bit 0

Legend:		
R = Readable bit	W = Writable bit	U = Unimplemented bit, read as ‘0’
-n = Value at POR	‘1’ = Bit is set0	‘0’ = Bit is cleared

bit 15-12 **HCFSEL[3:0]:** Hysteretic Comparator Function Input Select bits

The selected input signal controls the switching between the DACx high limit (DACxDATH) and the DACx low limit (DACxDATL) as the data source for the PDM DAC. It modifies the polarity of the comparator, and the rising and falling edges initiate the start of the LEB counter (TMCB[9:0] bits in Register 13-4).

Input Selection	Source
0101-1111	1
0100	PWM4H
0011	PWM3H
0010	PWM2H
0001	PWM1H
0000	0

bit 11-8 **SLPSTOPA[3:0]:** Slope Stop A Signal Select bits

The selected Slope Stop A signal is logically OR’d with the selected Slope Stop B signal to terminate the slope function.

Slope Stop A Signal Selection	Master
0101-1111	1
0100	PWM4 Trigger 2
0011	PWM3 Trigger 2
0010	PWM2 Trigger 2
0001	PWM1 Trigger 2
0000	0

© 2018-2019 Microchip Technology Inc.

REGISTER 13-9: SLPxCONL: DACx SLOPE CONTROL LOW REGISTER (CONTINUED)

bit 7-4 **SLPSTOPB[3:0]:** Slope Stop B Signal Select bits

The selected Slope Stop B signal is logically OR'd with the selected Slope Stop A signal to terminate the slope function.

Slope Start B Signal Selection	Master
0100-1111	1
0011	CMP3 Out
0010	CMP2 Out
0001	CMP1 Out
0000	0

bit 3-0 **SLPSTRT[3:0]:** Slope Start Signal Select bits

Slope Start Signal Selection	Master
0101-1111	1
0100	PWM4 Trigger 1
0011	PWM3 Trigger 1
0010	PWM2 Trigger 1
0001	PWM1 Trigger 1
0000	0

REGISTER 13-10: SLPxDAT: DACx SLOPE DATA REGISTER(1)

R/W-0	R/W-0	R/W-0	R/W-0	R/W-0	R/W-0	R/W-0	R/W-0
SLPDAT[15:8]							
bit 15							bit 8

R/W-0	R/W-0	R/W-0	R/W-0	R/W-0	R/W-0	R/W-0	R/W-0
SLPDAT[7:0]							
bit 7							bit 0

Legend:		
R = Readable bit	W = Writable bit	U = Unimplemented bit, read as '0'
-n = Value at POR	'1' = Bit is set	'0' = Bit is cleared

bit 15-0 **SLPDAT[15:0]:** Slope Ramp Rate Value bits

The SLPDATx value is in 12.4 format.

Note 1: Register data is left justified.

NOTES:

© 2018-2019 Microchip Technology Inc.

14.0 QUADRATURE ENCODER INTERFACE (QEI)

Note 1: This data sheet summarizes the features of the dsPIC33CK64MP105 family of devices. It is not intended to be a comprehensive resource. For more information, refer to **"Quadrature Encoder Interface (QEI)"** (www.microchip.com/DS70000601) in the *"dsPIC33/PIC24 Family Reference Manual"*.

The Quadrature Encoder Interface (QEI) module provides the interface to incremental encoders for obtaining mechanical position data. The dsPIC33CK64MP105 family implements two instances of the QEI. Quadrature Encoders, also known as incremental encoders or optical encoders, detect position and speed of rotating motion systems. Quadrature Encoders enable closed-loop control of motor control applications, such as Switched Reluctance (SR) and AC Induction Motors (ACIM).

A typical Quadrature Encoder includes a slotted wheel attached to the shaft of the motor and an emitter/detector module that senses the slots in the wheel. Typically, three output channels, Phase A (QEAx), Phase B (QEBx) and Index (INDXx), provide information on the movement of the motor shaft, including distance and direction.

The two channels, Phase A (QEAx) and Phase B (QEBx), are typically 90 degrees out of phase with respect to each other. The Phase A and Phase B channels have a unique relationship. If Phase A leads Phase B, the direction of the motor is deemed positive or forward. If Phase A lags Phase B, the direction of the motor is deemed negative or reverse. The Index pulse occurs once per mechanical revolution and is used as a reference to indicate an absolute position. Figure 14-1 illustrates the Quadrature Encoder Interface signals.

The Quadrature signals from the encoder can have four unique states ('01', '00', '10' and '11') that reflect the relationship between QEAx and QEBx. Figure 14-1 illustrates these states for one count cycle. The order of the states get reversed when the direction of travel changes.

The Quadrature Decoder increments or decrements the 32-bit up/down Position x Counter (POSxCNTH/L) registers for each Change-of-State (COS). The counter increments when QEAx leads QEBx and decrements when QEBx leads QEAx.

FIGURE 14-1: QUADRATURE ENCODER INTERFACE SIGNALS

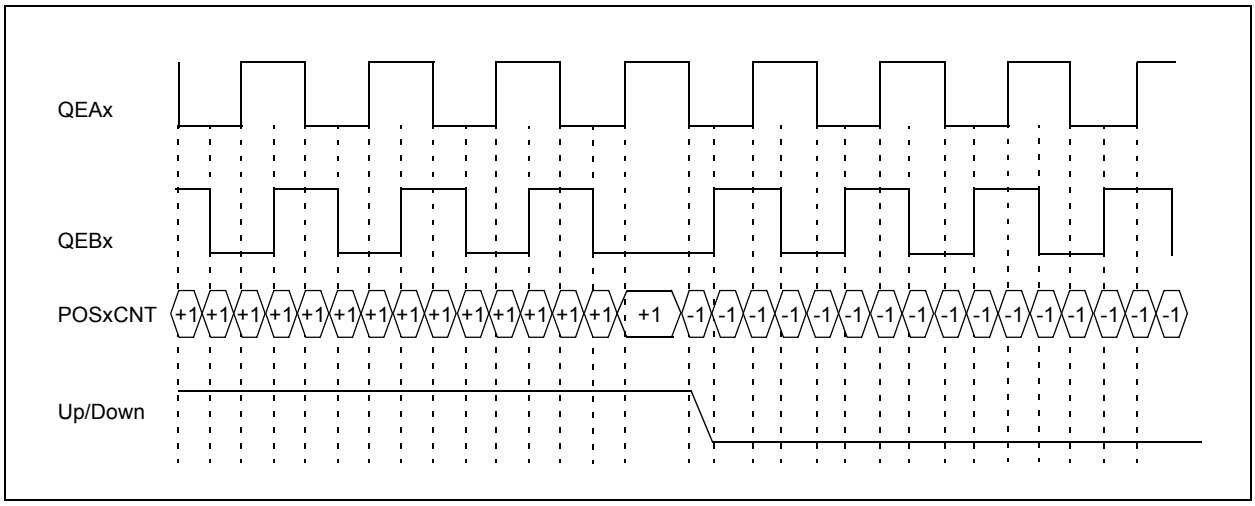

Table 14-1 shows the truth table that describes how the Quadrature signals are decoded.

TABLE 14-1: TRUTH TABLE FOR QUADRATURE ENCODER

Current Quadrature State		Previous Quadrature State		Action
QEA	QEB	QEA	QEB	
1	1	1	1	No count or direction change
1	1	1	0	Count up
1	1	0	1	Count down
1	1	0	0	Invalid state change; ignore
1	0	1	1	Count down
1	0	1	0	No count or direction change
1	0	0	1	Invalid state change; ignore
1	0	0	0	Count up
0	1	1	1	Count up
0	1	1	0	Invalid state change; ignore
0	1	0	1	No count or direction change
0	1	0	0	Count down
0	0	1	1	Invalid state change; ignore
0	0	1	0	Count down
0	0	0	1	Count up
0	0	0	0	No count or direction change

Figure 14-2 illustrates the simplified block diagram of the QEI module. The QEI module consists of decoder logic to interpret the Phase A (QEAx) and Phase B (QEBx) signals, and an up/down counter to accumulate the count. The counter pulses are generated when the Quadrature state changes. The count direction information must be maintained in a register until a direction change is detected. The module also includes digital noise filters, which condition the input signal.

The QEI module consists of the following major features:

- Four Input Pins: Two Phase Signals, an Index Pulse and a Home Pulse
- Programmable Digital Noise Filters on Inputs
- Quadrature Decoder providing Counter Pulses and Count Direction
- Count Direction Status
- 4x Count Resolution
- Index (INDXx) Pulse to Reset the Position Counter
- General Purpose 32-Bit Timer/Counter mode
- Interrupts generated by QEI or Counter Events
- 32-Bit Velocity Counter
- 32-Bit Position Counter
- 32-Bit Index Pulse Counter
- 32-Bit Interval Timer
- 32-Bit Position Initialization/Capture Register
- 32-Bit Compare Less Than and Greater Than Registers
- External Up/Down Count mode
- External Gated Count mode
- External Gated Timer mode
- Interval Timer mode

© 2018-2019 Microchip Technology Inc.

FIGURE 14-2: QUADRATURE ENCODER INTERFACE (QEI) MODULE BLOCK DIAGRAM

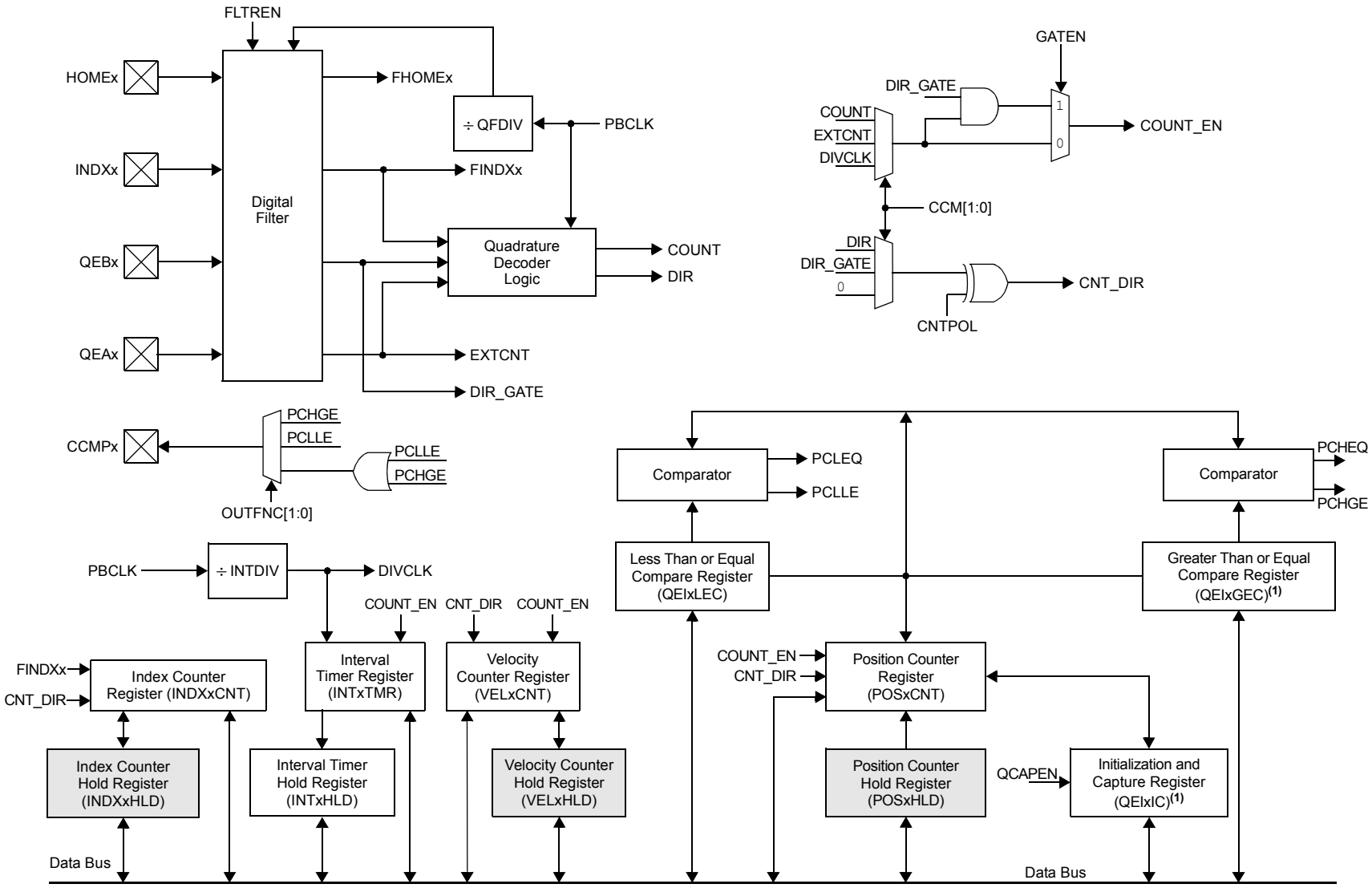

Note 1: These registers map to the same memory location.

14.1 QEI Control/Status Registers

REGISTER 14-1: QEIxCON: QEIx CONTROL REGISTER

R/W-0	U-0	R/W-0	R/W-0	R/W-0	R/W-0	R/W-0	R/W-0
QEIEN	—	QEISIDL	PIMOD2(1,5)	PIMOD1(1,5)	PIMOD0(1,5)	IMV1(2)	IMV0(2)
bit 15							bit 8

U-0	R/W-0	R/W-0	R/W-0	R/W-0	R/W-0	R/W-0	R/W-0
—	INTDIV2(3)	INTDIV1(3)	INTDIV0(3)	CNTPOL	GATEN	CCM1	CCM0
bit 7							bit 0

Legend:			
R = Readable bit	W = Writable bit	U = Unimplemented bit, read as ‘0’	
-n = Value at POR	‘1’ = Bit is set	‘0’ = Bit is cleared	x = Bit is unknown

bit 15 **QEIEN:** Quadrature Encoder Interface Module Enable bit
`1` = Module counters are enabled
`0` = Module counters are disabled, but SFRs can be read or written

bit 14 **Unimplemented:** Read as ‘`0`’

bit 13 **QEISIDL:** QEI Stop in Idle Mode bit
`1` = Discontinues module operation when device enters Idle mode
`0` = Continues module operation in Idle mode

bit 12-10 **PIMOD[2:0]:** Position Counter Initialization Mode Select bits(1,5)
`111` = Modulo Count mode for position counter and every Index event resets the position counter(4)
`110` = Modulo Count mode for position counter
`101` = Resets the position counter when the position counter equals the QEIxGEC register
`100` = Second Index event after Home event initializes position counter with contents of QEIxIC register
`011` = First Index event after Home event initializes position counter with contents of QEIxIC register
`010` = Next Index input event initializes the position counter with contents of QEIxIC register
`001` = Every Index input event resets the position counter
`000` = Index input event does not affect the position counter

bit 9-8 **IMV[1:0]:** Index Match Value bits(2)
`11` = Index match occurs when QEBx = `1` and QEAx = `1`
`10` = Index match occurs when QEBx = `1` and QEAx = `0`
`01` = Index match occurs when QEBx = `0` and QEAx = `1`
`00` = Index match occurs when QEBx = `0` and QEAx = `0`

bit 7 **Unimplemented:** Read as ‘`0`’

Note 1: When CCMx = `10` or CCMx = `11`, all of the QEI counters operate as timers and the PIMOD[2:0] bits are ignored.
2: When CCMx = `00`, and QEAx and QEBx values match the Index Match Value (IMV), the POSxCNTH and POSxCNTL registers are reset.
3: The selected clock rate should be at least twice the expected maximum quadrature count rate.
4: Not all devices support this mode.
5: The QCAPEN and HCAPEN bits must be cleared during PIMODx Modes 2 through 7 to ensure proper functionality. Not all devices support HCAPEN.

© 2018-2019 Microchip Technology Inc.

REGISTER 14-1: QEIxCON: QEIx CONTROL REGISTER (CONTINUED)

bit 6-4 **INTDIV[2:0]:** Timer Input Clock Prescale Select bits[3]
(interval timer, main timer (position counter), velocity counter and Index counter internal clock divider select)
111 = 1:256 prescale value
110 = 1:64 prescale value
101 = 1:32 prescale value
100 = 1:16 prescale value
011 = 1:8 prescale value
010 = 1:4 prescale value
001 = 1:2 prescale value
000 = 1:1 prescale value

bit 3 **CNTPOL:** Position and Index Counter/Timer Direction Select bit
1 = Counter direction is negative unless modified by external up/down signal
0 = Counter direction is positive unless modified by external up/down signal

bit 2 **GATEN:** External Count Gate Enable bit
1 = External gate signal controls position counter operation
0 = External gate signal does not affect position counter operation

bit 1-0 **CCM[1:0]:** Counter Control Mode Selection bits
11 = Internal Timer mode
10 = External Clock Count with External Gate mode
01 = External Clock Count with External Up/Down mode
00 = Quadrature Encoder mode

Note 1: When CCMx = 10 or CCMx = 11, all of the QEI counters operate as timers and the PIMOD[2:0] bits are ignored.

2: When CCMx = 00, and QEAx and QEBx values match the Index Match Value (IMV), the POSxCNTH and POSxCNTL registers are reset.

3: The selected clock rate should be at least twice the expected maximum quadrature count rate.

4: Not all devices support this mode.

5: The QCAPEN and HCAPEN bits must be cleared during PIMODx Modes 2 through 7 to ensure proper functionality. Not all devices support HCAPEN.

REGISTER 14-2: QEIxIOC: QEIx I/O CONTROL REGISTER

R/W-0	R/W-0	R/W-0	R/W-0	R/W-0	R/W-0	R/W-0	R/W-0
QCAPEN	FLTREN	QFDIV2	QFDIV1	QFDIV0	OUTFNC1	OUTFNC0	SWPAB
bit 15							bit 8

R/W-0	R/W-0	R/W-0	R/W-0	R-x	R-x	R-x	R-x
HOMPOL	IDXPOL	QEBPOL	QEAPOL	HOME	INDEX	QEB	QEA
bit 7							bit 0

Legend:			
R = Readable bit	W = Writable bit	U = Unimplemented bit, read as ‘0’	
-n = Value at POR	‘1’ = Bit is set	‘0’ = Bit is cleared	x = Bit is unknown

bit 15 **QCAPEN:** QEIx Position Counter Input Capture Enable bit
1 = HOMEx input event (positive edge) triggers a position capture event (HCAPEN must be cleared)
0 = HOMEx input event (positive edge) does not trigger a position capture event

bit 14 **FLTREN:** QEAx/QEBx/INDXx/HOMEx Digital Filter Enable bit
1 = Input pin digital filter is enabled
0 = Input pin digital filter is disabled (bypassed)

bit 13-11 **QFDIV[2:0]:** QEAx/QEBx/INDXx/HOMEx Digital Input Filter Clock Divide Select bits
111 = 1:256 clock divide
110 = 1:64 clock divide
101 = 1:32 clock divide
100 = 1:16 clock divide
011 = 1:8 clock divide
010 = 1:4 clock divide
001 = 1:2 clock divide
000 = 1:1 clock divide

bit 10-9 **OUTFNC[1:0]:** QEIx Module Output Function Mode Select bits
11 = The QEICMPx pin goes high when POSxCNT $\leq$ QEIxLEC or POSxCNT $\geq$ QEIxGEC
10 = The QEICMPx pin goes high when POSxCNT $\leq$ QEIxLEC
01 = The QEICMPx pin goes high when POSxCNT $\geq$ QEIxGEC
00 = Output is disabled

bit 8 **SWPAB:** Swap QEAx and QEBx Inputs bit
1 = QEAx and QEBx are swapped prior to Quadrature Decoder logic
0 = QEAx and QEBx are not swapped

bit 7 **HOMPOL:** HOMEx Input Polarity Select bit
1 = Input is inverted
0 = Input is not inverted

bit 6 **IDXPOL:** INDXx Input Polarity Select bit
1 = Input is inverted
0 = Input is not inverted

bit 5 **QEBPOL:** QEBx Input Polarity Select bit
1 = Input is inverted
0 = Input is not inverted

bit 4 **QEAPOL:** QEAx Input Polarity Select bit
1 = Input is inverted
0 = Input is not inverted

bit 3 **HOME:** Status of HOMEx Input Pin After Polarity Control bit (read-only)
1 = Pin is at logic ‘1’ if the HOMPOL bit is set to ‘0’; pin is at logic ‘0’ if the HOMPOL bit is set to ‘1’
0 = Pin is at logic ‘0’ if the HOMPOL bit is set to ‘0’; pin is at logic ‘1’ if the HOMPOL bit is set to ‘1’

© 2018-2019 Microchip Technology Inc.

REGISTER 14-2: QEIxIOC: QEIx I/O CONTROL REGISTER (CONTINUED)

bit 2 **INDEX:** Status of INDXx Input Pin After Polarity Control bit (read-only)

1 = Pin is at logic '1' if the IDXPOL bit is set to '0'; pin is at logic '0' if the IDXPOL bit is set to '1'
0 = Pin is at logic '0' if the IDXPOL bit is set to '0'; pin is at logic '1' if the IDXPOL bit is set to '1'

bit 1 **QEB:** Status of QEBx Input Pin After Polarity Control and SWPAB Pin Swapping bit (read-only)

1 = Physical pin, QEBx, is at logic '1' if the QEBPOL bit is set to '0' and the SWPAB bit is set to '0';
physical pin, QEBx, is at logic '0' if the QEBPOL bit is set to '1' and the SWPAB bit is set to '0';
physical pin, QEAx, is at logic '1' if the QEBPOL bit is set to '0' and the SWPAB bit is set to '1';
physical pin, QEAx, is at logic '0' if the QEBPOL bit is set to '1' and the SWPAB bit is set to '1'
0 = Physical pin, QEBx, is at logic '0' if the QEBPOL bit is set to '0' and the SWPAB bit is set to '0';
physical pin, QEBx, is at logic '1' if the QEBPOL bit is set to '1' and the SWPAB bit is set to '0';
physical pin, QEAx, is at logic '0' if the QEBPOL bit is set to '0' and the SWPAB bit is set to '1';
physical pin, QEAx, is at logic '1' if the QEBPOL bit is set to '1' and the SWPAB bit is set to '1'

bit 0 **QEA:** Status of QEAx Input Pin After Polarity Control and SWPAB Pin Swapping bit (read-only)

1 = Physical pin, QEAx, is at logic '1' if the QEAPOL bit is set to '0' and the SWPAB bit is set to '0';
physical pin, QEAx, is at logic '0' if the QEAPOL bit is set to '1' and the SWPAB bit is set to '0';
physical pin, QEBx, is at logic '1' if the QEAPOL bit is set to '0' and the SWPAB bit is set to '1';
physical pin, QEBx, is at logic '0' if the QEAPOL bit is set to '1' and the SWPAB bit is set to '1'
0 = Physical pin, QEAx, is at logic '0' if the QEAPOL bit is set to '0' and the SWPAB bit is set to '0';
physical pin, QEAx, is at logic '1' if the QEAPOL bit is set to '1' and the SWPAB bit is set to '0';
physical pin, QEBx, is at logic '0' if the QEAPOL bit is set to '0' and the SWPAB bit is set to '1';
physical pin, QEBx, is at logic '1' if the QEAPOL bit is set to '1' and the SWPAB bit is set to '1'

REGISTER 14-3: QEIxIOCH: QEIx I/O CONTROL HIGH REGISTER

U-0	U-0	U-0	U-0	U-0	U-0	U-0	U-0
—	—	—	—	—	—	—	—
bit 15							bit 8

U-0	U-0	U-0	U-0	U-0	U-0	U-0	R/W-0
—	—	—	—	—	—	—	HCAPEN
bit 7							bit 0

Legend:			
R = Readable bit	W = Writable bit	U = Unimplemented bit, read as '0'	
-n = Value at POR	'1' = Bit is set	'0' = Bit is cleared	x = Bit is unknown

bit 15-1 **Unimplemented:** Read as '0'

bit 0 **HCAPEN:** Position Counter Input Capture by Home Event Enable bit

1 = HOMEx input event (positive edge) triggers a position capture event
0 = HOMEx input event (positive edge) does not trigger a position capture event

REGISTER 14-4: QEIxSTAT: QEIx STATUS REGISTER

U-0	U-0	HS/R/C-0	R/W-0	HS/R/C-0	R/W-0	HS/R/C-0	R/W-0
—	—	PCHEQIRQ	PCHEQIEN	PCLEQIRQ	PCLEQIEN	POSOVIRQ	POSOVIEN
bit 15							bit 8

HS/R/C-0	R/W-0	HS/R/C-0	R/W-0	HS/R/C-0	R/W-0	HS/R/C-0	R/W-0
PCIIRQ(1)	PCIIEN	VELOVIRQ	VELOVIEN	HOMIRQ	HOMIEN	IDXIRQ	IDXIEN
bit 7							bit 0

Legend:	C = Clearable bit	HS = Hardware Settable bit	
R = Readable bit	W = Writable bit	U = Unimplemented bit, read as ‘0’	
-n = Value at POR	‘1’ = Bit is set	‘0’ = Bit is cleared	x = Bit is unknown

bit 15-14 **Unimplemented:** Read as ‘0’

bit 13 **PCHEQIRQ:** Position Counter Greater Than Compare Status bit
1 = POSxCNT ≥ QEIxGEC
0 = POSxCNT < QEIxGEC

bit 12 **PCHEQIEN:** Position Counter Greater Than Compare Interrupt Enable bit
1 = Interrupt is enabled
0 = Interrupt is disabled

bit 11 **PCLEQIRQ:** Position Counter Less Than Compare Status bit
1 = POSxCNT ≤ QEIxLEC
0 = POSxCNT > QEIxLEC

bit 10 **PCLEQIEN:** Position Counter Less Than Compare Interrupt Enable bit
1 = Interrupt is enabled
0 = Interrupt is disabled

bit 9 **POSOVIRQ:** Position Counter Overflow Status bit
1 = Overflow has occurred
0 = No overflow has occurred

bit 8 **POSOVIEN:** Position Counter Overflow Interrupt Enable bit
1 = Interrupt is enabled
0 = Interrupt is disabled

bit 7 **PCIIRQ:** Position Counter (Homing) Initialization Process Complete Status bit(1)
1 = POSxCNT was reinitialized
0 = POSxCNT was not reinitialized

bit 6 **PCIIEN:** Position Counter (Homing) Initialization Process Complete Interrupt Enable bit
1 = Interrupt is enabled
0 = Interrupt is disabled

bit 5 **VELOVIRQ:** Velocity Counter Overflow Status bit
1 = Overflow has occurred
0 = No overflow has occurred

bit 4 **VELOVIEN:** Velocity Counter Overflow Interrupt Enable bit
1 = Interrupt is enabled
0 = Interrupt is disabled

bit 3 **HOMIRQ:** Status Flag for Home Event Status bit
1 = Home event has occurred
0 = No Home event has occurred

Note 1: This status bit is only applicable to PIMOD[2:0] modes, ‘011’ and ‘100’.

© 2018-2019 Microchip Technology Inc.

REGISTER 14-4: QEIxSTAT: QEIx STATUS REGISTER (CONTINUED)

bit 2 **HOMIEN:** Home Input Event Interrupt Enable bit
1 = Interrupt is enabled
0 = Interrupt is disabled

bit 1 **IDXIRQ:** Status Flag for Index Event Status bit
1 = Index event has occurred
0 = No Index event has occurred

bit 0 **IDXIEN:** Index Input Event Interrupt Enable bit
1 = Interrupt is enabled
0 = Interrupt is disabled

Note 1: This status bit is only applicable to PIMOD[2:0] modes, '011' and '100'.

REGISTER 14-5: POSxCNTL: POSITION x COUNTER REGISTER LOW

R/W-0	R/W-0	R/W-0	R/W-0	R/W-0	R/W-0	R/W-0	R/W-0
POSCNT[15:8]							
bit 15							bit 8

R/W-0	R/W-0	R/W-0	R/W-0	R/W-0	R/W-0	R/W-0	R/W-0
POSCNT[7:0]							
bit 7							bit 0

Legend:			
R = Readable bit	W = Writable bit	U = Unimplemented bit, read as ‘0’	
-n = Value at POR	‘1’ = Bit is set	‘0’ = Bit is cleared	x = Bit is unknown

bit 15-0 **POSCNT[15:0]:** Low Word Used to Form 32-Bit Position Counter Register (POSxCNT) bits

REGISTER 14-6: POSxCNTH: POSITION x COUNTER REGISTER HIGH

R/W-0	R/W-0	R/W-0	R/W-0	R/W-0	R/W-0	R/W-0	R/W-0
POSCNT[31:24]							
bit 15							bit 8

R/W-0	R/W-0	R/W-0	R/W-0	R/W-0	R/W-0	R/W-0	R/W-0
POSCNT[23:16]							
bit 7							bit 0

Legend:			
R = Readable bit	W = Writable bit	U = Unimplemented bit, read as ‘0’	
-n = Value at POR	‘1’ = Bit is set	‘0’ = Bit is cleared	x = Bit is unknown

bit 15-0 **POSCNT[31:16]:** High Word Used to Form 32-Bit Position Counter Register (POSxCNT) bits

© 2018-2019 Microchip Technology Inc.

REGISTER 14-7: POSxHLD: POSITION x COUNTER HOLD REGISTER

R/W-0	R/W-0	R/W-0	R/W-0	R/W-0	R/W-0	R/W-0	R/W-0
POSHLD[15:8]							
bit 15							bit 8

R/W-0	R/W-0	R/W-0	R/W-0	R/W-0	R/W-0	R/W-0	R/W-0
POSHLD[7:0]							
bit 7							bit 0

Legend:			
R = Readable bit	W = Writable bit	U = Unimplemented bit, read as ‘0’	
-n = Value at POR	‘1’ = Bit is set	‘0’ = Bit is cleared	x = Bit is unknown

bit 15-0 **POSHLD[15:0]:** Hold Register for Reading/Writing Position x Counter High Word Register (POSxCNTH) bits

REGISTER 14-8: VELxCNT: VELOCITY x COUNTER REGISTER

R/W-0	R/W-0	R/W-0	R/W-0	R/W-0	R/W-0	R/W-0	R/W-0
VELCNT[15:8]							
bit 15							bit 8

R/W-0	R/W-0	R/W-0	R/W-0	R/W-0	R/W-0	R/W-0	R/W-0
VELCNT[7:0]							
bit 7							bit 0

Legend:			
R = Readable bit	W = Writable bit	U = Unimplemented bit, read as ‘0’	
-n = Value at POR	‘1’ = Bit is set	‘0’ = Bit is cleared	x = Bit is unknown

bit 15-0 **VELCNT[15:0]:** Velocity Counter bits

REGISTER 14-9: VELxCNTH: VELOCITY x COUNTER REGISTER HIGH

R/W-0	R/W-0	R/W-0	R/W-0	R/W-0	R/W-0	R/W-0	R/W-0
VELCNT[31:24]							
bit 15							bit 8

R/W-0	R/W-0	R/W-0	R/W-0	R/W-0	R/W-0	R/W-0	R/W-0
VELCNT[23:16]							
bit 7							bit 0

Legend:			
R = Readable bit	W = Writable bit	U = Unimplemented bit, read as ‘0’	
-n = Value at POR	‘1’ = Bit is set	‘0’ = Bit is cleared	x = Bit is unknown

bit 15-0 **VELCNT[31:16]:** Velocity Counter bits

© 2018-2019 Microchip Technology Inc.

REGISTER 14-10: VELxHLD: VELOCITY x COUNTER HOLD REGISTER

R/W-0	R/W-0	R/W-0	R/W-0	R/W-0	R/W-0	R/W-0	R/W-0
VELHLD[15:8]							
bit 15							bit 8
R/W-0	R/W-0	R/W-0	R/W-0	R/W-0	R/W-0	R/W-0	R/W-0
VELHLD[7:0]							
bit 7							bit 0

Legend:			
R = Readable bit	W = Writable bit	U = Unimplemented bit, read as ‘0’	
-n = Value at POR	‘1’ = Bit is set	‘0’ = Bit is cleared	x = Bit is unknown

bit 15-0 **VELHLD[15:0]:** Hold for Reading/Writing Velocity Counter Register (VELxCNT) bits

REGISTER 14-11: INTxTMRL: INTERVAL x TIMER REGISTER LOW

R/W-0	R/W-0	R/W-0	R/W-0	R/W-0	R/W-0	R/W-0	R/W-0
INTTMR[15:8]							
bit 15							bit 8

R/W-0	R/W-0	R/W-0	R/W-0	R/W-0	R/W-0	R/W-0	R/W-0
INTTMR[7:0]							
bit 7							bit 0

Legend:			
R = Readable bit	W = Writable bit	U = Unimplemented bit, read as ‘0’	
-n = Value at POR	‘1’ = Bit is set	‘0’ = Bit is cleared	x = Bit is unknown

bit 15-0 **INTTMR[15:0]:** Low Word Used to Form 32-Bit Interval Timer Register (INTxTMR) bits

REGISTER 14-12: INTxTMRH: INTERVAL x TIMER REGISTER HIGH

R/W-0	R/W-0	R/W-0	R/W-0	R/W-0	R/W-0	R/W-0	R/W-0
INTTMR[31:24]							
bit 15							bit 8

R/W-0	R/W-0	R/W-0	R/W-0	R/W-0	R/W-0	R/W-0	R/W-0
INTTMR[23:16]							
bit 7							bit 0

Legend:			
R = Readable bit	W = Writable bit	U = Unimplemented bit, read as ‘0’	
-n = Value at POR	‘1’ = Bit is set	‘0’ = Bit is cleared	x = Bit is unknown

bit 15-0 **INTTMR[31:16]:** High Word Used to Form 32-Bit Interval Timer Register (INTxTMR) bits

© 2018-2019 Microchip Technology Inc.

REGISTER 14-13: INTXxHLDL: INTERVAL x TIMER HOLD REGISTER LOW

R/W-0	R/W-0	R/W-0	R/W-0	R/W-0	R/W-0	R/W-0	R/W-0
INTHLD[15:8]							
bit 15							bit 8

R/W-0	R/W-0	R/W-0	R/W-0	R/W-0	R/W-0	R/W-0	R/W-0
INTHLD[7:0]							
bit 7							bit 0

Legend:			
R = Readable bit	W = Writable bit	U = Unimplemented bit, read as ‘0’	
-n = Value at POR	‘1’ = Bit is set	‘0’ = Bit is cleared	x = Bit is unknown

bit 15-0 **INTHLD[15:0]:** Low Word Used to Form 32-Bit Interval Timer Hold Register (INTxHLD) bits

REGISTER 14-14: INTXxHLDH: INTERVAL x TIMER HOLD REGISTER HIGH

R/W-0	R/W-0	R/W-0	R/W-0	R/W-0	R/W-0	R/W-0	R/W-0
INTHLD[31:24]							
bit 15							bit 8

R/W-0	R/W-0	R/W-0	R/W-0	R/W-0	R/W-0	R/W-0	R/W-0
INTHLD[23:16]							
bit 7							bit 0

Legend:			
R = Readable bit	W = Writable bit	U = Unimplemented bit, read as ‘0’	
-n = Value at POR	‘1’ = Bit is set	‘0’ = Bit is cleared	x = Bit is unknown

bit 15-0 **INTHLD[31:16]:** High Word Used to Form 32-Bit Interval Timer Hold Register (INTxHLD) bits

REGISTER 14-15: INDXxCNTL: INDEX x COUNTER REGISTER LOW

R/W-0	R/W-0	R/W-0	R/W-0	R/W-0	R/W-0	R/W-0	R/W-0
INDXCNT[15:8]							
bit 15							bit 8

R/W-0	R/W-0	R/W-0	R/W-0	R/W-0	R/W-0	R/W-0	R/W-0
INDXCNT[7:0]							
bit 7							bit 0

Legend:			
R = Readable bit	W = Writable bit	U = Unimplemented bit, read as ‘0’	
-n = Value at POR	‘1’ = Bit is set	‘0’ = Bit is cleared	x = Bit is unknown

bit 15-0 **INDXCNT[15:0]:** Low Word Used to Form 32-Bit Index x Counter Register (INDXxCNT) bits

REGISTER 14-16: INDXxCNTH: INDEX x COUNTER REGISTER HIGH

R/W-0	R/W-0	R/W-0	R/W-0	R/W-0	R/W-0	R/W-0	R/W-0
INDXCNT[31:24]							
bit 15							bit 8

R/W-0	R/W-0	R/W-0	R/W-0	R/W-0	R/W-0	R/W-0	R/W-0
INDXCNT[23:16]							
bit 7							bit 0

Legend:			
R = Readable bit	W = Writable bit	U = Unimplemented bit, read as ‘0’	
-n = Value at POR	‘1’ = Bit is set	‘0’ = Bit is cleared	x = Bit is unknown

bit 15-0 **INDXCNT[31:16]:** High Word Used to Form 32-Bit Index x Counter Register (INDXxCNT) bits

© 2018-2019 Microchip Technology Inc.

REGISTER 14-17: INDXxHLD: INDEX x COUNTER HOLD REGISTER

R/W-0	R/W-0	R/W-0	R/W-0	R/W-0	R/W-0	R/W-0	R/W-0
INDXHLD[15:8]							
bit 15							bit 8

R/W-0	R/W-0	R/W-0	R/W-0	R/W-0	R/W-0	R/W-0	R/W-0
INDXHLD[7:0]							
bit 7							bit 0

Legend:			
R = Readable bit	W = Writable bit	U = Unimplemented bit, read as ‘0’	
-n = Value at POR	‘1’ = Bit is set	‘0’ = Bit is cleared	x = Bit is unknown

bit 15-0 **INDXHLD[15:0]:** Hold Register for Reading/Writing Index x Counter High Word Register (INDXxCNTH) bits

REGISTER 14-18: QEIxICL: QEIx INITIALIZATION/CAPTURE REGISTER LOW

R/W-0	R/W-0	R/W-0	R/W-0	R/W-0	R/W-0	R/W-0	R/W-0
QEIIC[15:8]							
bit 15							bit 8

R/W-0	R/W-0	R/W-0	R/W-0	R/W-0	R/W-0	R/W-0	R/W-0
QEIIC[7:0]							
bit 7							bit 0

Legend:			
R = Readable bit	W = Writable bit	U = Unimplemented bit, read as ‘0’	
-n = Value at POR	‘1’ = Bit is set	‘0’ = Bit is cleared	x = Bit is unknown

bit 15-0 **QEIIC[15:0]:** Low Word Used to Form 32-Bit Initialization/Capture Register (QEIxIC) bits

REGISTER 14-19: QEIxICH: QEIx INITIALIZATION/CAPTURE REGISTER HIGH

R/W-0	R/W-0	R/W-0	R/W-0	R/W-0	R/W-0	R/W-0	R/W-0
QEIIC[31:24]							
bit 15							bit 8

R/W-0	R/W-0	R/W-0	R/W-0	R/W-0	R/W-0	R/W-0	R/W-0
QEIIC[23:16]							
bit 7							bit 0

Legend:			
R = Readable bit	W = Writable bit	U = Unimplemented bit, read as ‘0’	
-n = Value at POR	‘1’ = Bit is set	‘0’ = Bit is cleared	x = Bit is unknown

bit 15-0 **QEIIC[31:16]:** High Word Used to Form 32-Bit Initialization/Capture Register (QEIxIC) bits

© 2018-2019 Microchip Technology Inc.

REGISTER 14-20: QEIxLECL: QEIx LESS THAN OR EQUAL COMPARE REGISTER LOW

R/W-0	R/W-0	R/W-0	R/W-0	R/W-0	R/W-0	R/W-0	R/W-0
QEILEC[15:8]							
bit 15							bit 8

R/W-0	R/W-0	R/W-0	R/W-0	R/W-0	R/W-0	R/W-0	R/W-0
QEILEC[7:0]							
bit 7							bit 0

Legend:			
R = Readable bit	W = Writable bit	U = Unimplemented bit, read as ‘0’	
-n = Value at POR	‘1’ = Bit is set	‘0’ = Bit is cleared	x = Bit is unknown

bit 15-0 **QEILEC[15:0]:** Low Word Used to Form 32-Bit Less Than or Equal Compare Register (QEIxLEC) bits

REGISTER 14-21: QEIxLECH: QEIx LESS THAN OR EQUAL COMPARE REGISTER HIGH

R/W-0	R/W-0	R/W-0	R/W-0	R/W-0	R/W-0	R/W-0	R/W-0
QEILEC[31:24]							
bit 15							bit 8

R/W-0	R/W-0	R/W-0	R/W-0	R/W-0	R/W-0	R/W-0	R/W-0
QEILEC[23:16]							
bit 7							bit 0

Legend:			
R = Readable bit	W = Writable bit	U = Unimplemented bit, read as ‘0’	
-n = Value at POR	‘1’ = Bit is set	‘0’ = Bit is cleared	x = Bit is unknown

bit 15-0 **QEILEC[31:16]:** High Word Used to Form 32-Bit Less Than or Equal Compare Register (QEIxLEC) bits

REGISTER 14-22: QEIxGECL: QEIx GREATER THAN OR EQUAL COMPARE REGISTER LOW

R/W-0	R/W-0	R/W-0	R/W-0	R/W-0	R/W-0	R/W-0	R/W-0
QEIGEC[15:8]							
bit 15							bit 8

R/W-0	R/W-0	R/W-0	R/W-0	R/W-0	R/W-0	R/W-0	R/W-0
QEIGEC[7:0]							
bit 7							bit 0

Legend:			
R = Readable bit	W = Writable bit	U = Unimplemented bit, read as ‘0’	
-n = Value at POR	‘1’ = Bit is set	‘0’ = Bit is cleared	x = Bit is unknown

bit 15-0 **QEIGEC[15:0]:** Low Word Used to Form 32-Bit Greater Than or Equal Compare Register (QEIxGEC) bits

REGISTER 14-23: QEIxGECH: QEIx GREATER THAN OR EQUAL COMPARE REGISTER HIGH

R/W-0	R/W-0	R/W-0	R/W-0	R/W-0	R/W-0	R/W-0	R/W-0
QEIGEC[31:24]							
bit 15							bit 8

R/W-0	R/W-0	R/W-0	R/W-0	R/W-0	R/W-0	R/W-0	R/W-0
QEIGEC[23:16]							
bit 7							bit 0

Legend:			
R = Readable bit	W = Writable bit	U = Unimplemented bit, read as ‘0’	
-n = Value at POR	‘1’ = Bit is set	‘0’ = Bit is cleared	x = Bit is unknown

bit 15-0 **QEIGEC[31:16]:** High Word Used to Form 32-Bit Greater Than or Equal Compare Register (QEIxGEC) bits

© 2018-2019 Microchip Technology Inc.

15.0 UNIVERSAL ASYNCHRONOUS RECEIVER TRANSMITTER (UART)

Note 1: This data sheet summarizes the features of the dsPIC33CK64MP105 family of devices. It is not intended to be a comprehensive reference source. To complement the information in this data sheet, refer to **"Multiprotocol Universal Asynchronous Receiver Transmitter (UART) Module"** (www.microchip.com/DS70005288) in the *"dsPIC33/PIC24 Family Reference Manual"*.

The Universal Asynchronous Receiver Transmitter (UART) is a flexible serial communication peripheral used to interface dsPIC® microcontrollers with other equipment, including computers and peripherals. The UART is a full-duplex, asynchronous communication channel that can be used to implement protocols, such as RS-232 and RS-485. The UART also supports the following hardware extensions:

- LIN/J2602
- IrDA®
- Direct Matrix Architecture (DMX)
- Smart Card

The primary features of the UART are:

- Full or Half-Duplex Operation
- Up to 8-Deep TX and RX First In, First Out (FIFO) Buffers
- 8-Bit or 9-Bit Data Width
- Configurable Stop Bit Length
- Flow Control
- Auto-Baud Calibration
- Parity, Framing and Buffer Overrun Error Detection
- Address Detect
- Break Transmission
- Transmit and Receive Polarity Control
- Manchester Encoder/Decoder
- Operation in Sleep mode
- Wake from Sleep on Sync Break Received Interrupt

15.1 Architectural Overview

The UART transfers bytes of data, to and from device pins, using First-In First-Out (FIFO) buffers up to eight bytes deep. The status of the buffers and data is made available to user software through Special Function Registers (SFRs). The UART implements multiple interrupt channels for handling transmit, receive and error events. A simplified block diagram of the UART is shown in Figure 15-1.

FIGURE 15-1: SIMPLIFIED UARTx BLOCK DIAGRAM

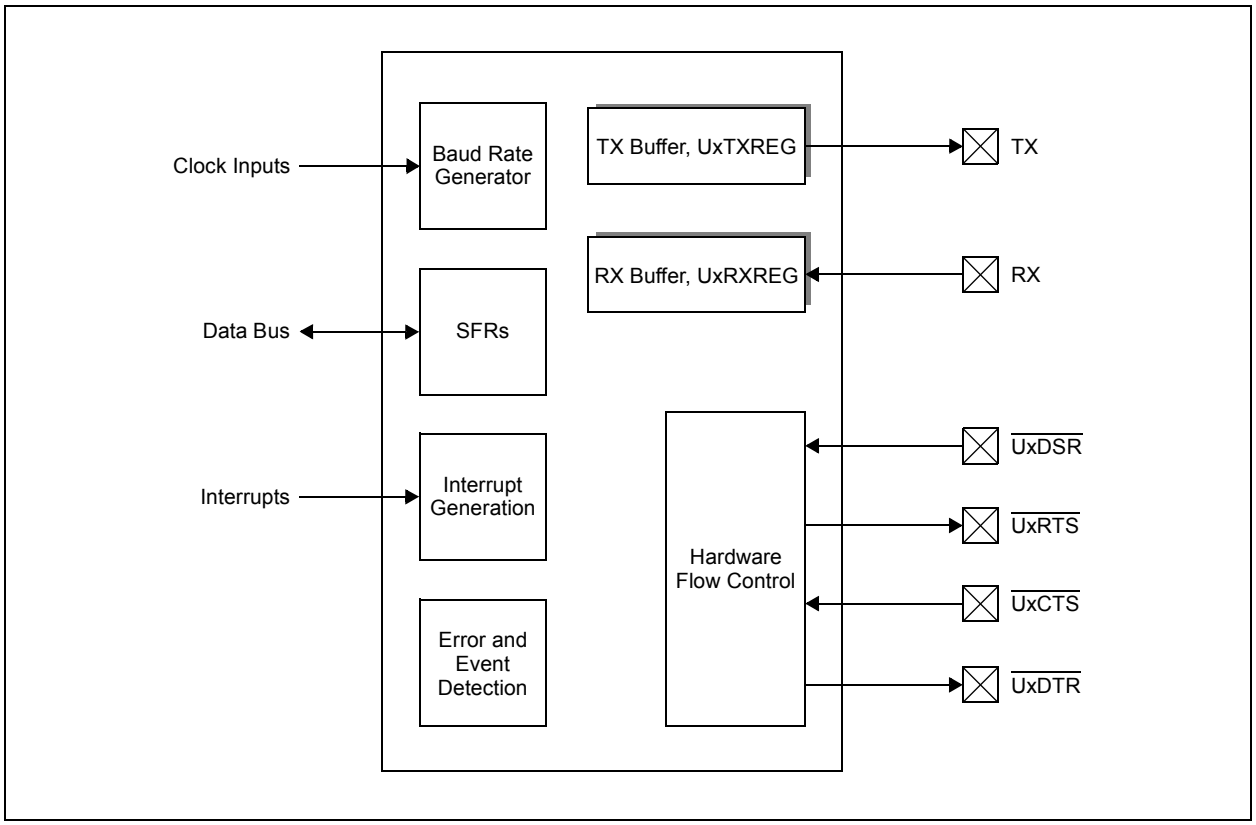

© 2018-2019 Microchip Technology Inc.

15.2 Character Frame

A typical UART character frame is shown in Figure 15-2. The Idle state is high with a 'Start' condition indicated by a falling edge. The Start bit is followed by the number of data, parity/address detect and Stop bits defined by the MOD[3:0] (UxMODE[3:0]) bits selected.

FIGURE 15-2: UART CHARACTER FRAME

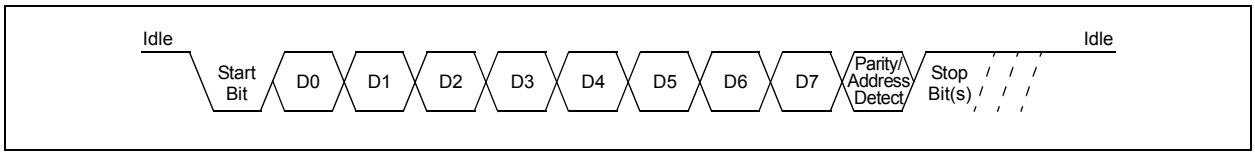

15.3 Data Buffers

Both transmit and receive functions use buffers to store data shifted to/from the pins. These buffers are FIFOs and are accessed by reading the SFRs, UxTXREG and UxRXREG, respectively. Each data buffer has multiple flags associated with its operation to allow software to read the status. Interrupts can also be configured based on the space available in the buffers. The transmit and receive buffers can be cleared and their pointers reset using the associated TX/RX Buffer Empty Status bits, UTXBE (UxSTAH[5]) and URXBE (UxSTAH[1]).

15.4 Protocol Extensions

The UART provides hardware support for LIN/J2602, IrDA®, DMX and smart card protocol extensions to reduce software overhead. A protocol extension is enabled by writing a value to the MOD[3:0] (UxMODE[3:0]) selection bits and further configured using the UARTx Timing Parameter registers, UxP1 (Register 15-9), UxP2 (Register 15-10), UxP3 (Register 15-11) and UxP3H (Register 15-12). Details regarding operation and usage are discussed in their respective chapters.

15.5 UART Control/Status Registers

REGISTER 15-1: UxMODE: UARTx CONFIGURATION REGISTER

R/W-0	U-0	R/W-0	R/W-0	R/W-0	U-0	R/W-0	HC/R/W-0[1]
UARTEN	—	USIDL	WAKE	RXBIMD	—	BRKOVR	UTXBRK
bit 15							bit 8

R/W-0	HC/R/W-0	R/W-0	R/W-0	R/W-0	R/W-0	R/W-0	R/W-0
BRGH	ABAUD	UTXEN	URXEN	MOD3	MOD2	MOD1	MOD0
bit 7							bit 0

Legend:	HC = Hardware Clearable bit		
R = Readable bit	W = Writable bit	U = Unimplemented bit, read as ‘0’	
-n = Value at POR	‘1’ = Bit is set	‘0’ = Bit is cleared	x = Bit is unknown

bit 15 **UARTEN:** UART Enable bit
1 = UART is ready to transmit and receive
0 = UART state machine, FIFO Buffer Pointers and counters are reset; registers are readable and writable

bit 14 **Unimplemented:** Read as ‘0’

bit 13 **USIDL:** UART Stop in Idle Mode bit
1 = Discontinues module operation when device enters Idle mode
0 = Continues module operation in Idle mode

bit 12 **WAKE:** Wake-up Enable bit
1 = Module will continue to sample the RX pin – interrupt generated on falling edge, bit cleared in hardware on following rising edge; if ABAUD is set, Auto-Baud Detection (ABD) will begin immediately
0 = RX pin is not monitored nor rising edge detected

bit 11 **RXBIMD:** Receive Break Interrupt Mode bit
1 = RXBKIF flag when a minimum of 23 (DMX)/11 (asynchronous or LIN/J2602) low bit periods are detected
0 = RXBKIF flag when the Break makes a low-to-high transition after being low for at least 23/11 bit periods

bit 10 **Unimplemented:** Read as ‘0’

bit 9 **BRKOVR:** Send Break Software Override bit
Overrides the TX Data Line:
1 = Makes the TX line active (Output 0 when UTXINV = 0, Output 1 when UTXINV = 1)
0 = TX line is driven by the shifter

bit 8 **UTXBRK:** UART Transmit Break bit[1]
1 = Sends Sync Break on next transmission; cleared by hardware upon completion
0 = Sync Break transmission is disabled or has completed

bit 7 **BRGH:** High Baud Rate Select bit
1 = High Speed: Baud rate is baudclk/4
0 = Low Speed: Baud rate is baudclk/16

bit 6 **ABAUD:** Auto-Baud Detect Enable bit (read-only when MOD[3:0] = 1xxx)
1 = Enables baud rate measurement on the next character – requires reception of a Sync field (55h); cleared in hardware upon completion
0 = Baud rate measurement is disabled or has completed

Note 1: R/HS/HC in DMX and LIN mode.

© 2018-2019 Microchip Technology Inc.

REGISTER 15-1: UxMODE: UARTx CONFIGURATION REGISTER (CONTINUED)

bit 5 **UTXEN:** UART Transmit Enable bit

1 = Transmit enabled – except during Auto-Baud Detection
0 = Transmit disabled – all transmit counters, pointers and state machines are reset; TX buffer is not flushed, status bits are not reset

bit 4 **URXEN:** UART Receive Enable bit

1 = Receive enabled – except during Auto-Baud Detection
0 = Receive disabled – all receive counters, pointers and state machines are reset; RX buffer is not flushed, status bits are not reset

bit 3-0 **MOD[3:0]:** UART Mode bits

Other = Reserved
1111 = Smart card
1110 = IrDA®
1101 = Reserved
1100 = LIN Master/Slave
1011 = LIN Slave only
1010 = DMX
1001 = Reserved
1000 = Reserved
0111 = Reserved
0110 = Reserved
0101 = Reserved
0100 = Asynchronous 9-bit UART with address detect, ninth bit = 1 signals address
0011 = Asynchronous 8-bit UART without address detect, ninth bit is used as an even parity bit
0010 = Asynchronous 8-bit UART without address detect, ninth bit is used as an odd parity bit
0001 = Asynchronous 7-bit UART
0000 = Asynchronous 8-bit UART

Note 1: R/HS/HC in DMX and LIN mode.

REGISTER 15-2: UxMODEH: UARTx CONFIGURATION REGISTER HIGH

R/W-0	R-0	U-0	U-0	R/W-0	R/W-0	R/W-0	R/W-0
SLPEN	ACTIVE	—	—	BCLKMOD	BCLKSEL1	BCLKSEL0	HALFDPLX
bit 15							bit 8

R/W-0	R/W-0	R/W-0	R/W-0	R/W-0	R/W-0	R/W-0	R/W-0
RUNOVF	URXINV	STSEL1	STSEL0	C0EN	UTXINV	FLO1	FLO0
bit 7							bit 0

Legend:			
R = Readable bit	W = Writable bit	U = Unimplemented bit, read as ‘0’	
-n = Value at POR	‘1’ = Bit is set	‘0’ = Bit is cleared	x = Bit is unknown

bit 15 **SLPEN:** Run During Sleep Enable bit
1 = UART BRG clock runs during Sleep
0 = UART BRG clock is turned off during Sleep

bit 14 **ACTIVE:** UART Running Status bit
1 = UART clock request is active (user can not update the UxMODE/UxMODEH registers)
0 = UART clock request is not active (user can update the UxMODE/UxMODEH registers)

bit 13-12 **Unimplemented:** Read as ‘0’

bit 11 **BCLKMOD:** Baud Clock Generation Mode Select bit
1 = Uses fractional Baud Rate Generation
0 = Uses legacy divide-by-x counter for baud clock generation (x = 4 or 16 depending on the BRGH bit)

bit 10-9 **BCLKSEL[1:0]:** Baud Clock Source Selection bits
11 = AFVCO/3
10 = FOSC
01 = Reserved
00 = FOSC/2 (FP)

bit 8 **HALFDPLX:** UART Half-Duplex Selection Mode bit
1 = Half-Duplex mode: UxTX is driven as an output when transmitting and tri-stated when TX is Idle
0 = Full-Duplex mode: UxTX is driven as an output at all times when both UARTEN and UTXEN are set

bit 7 **RUNOVF:** Run During Overflow Condition Mode bit
1 = When an Overflow Error (OERR) condition is detected, the RX shifter continues to run so as to remain synchronized with incoming RX data; data is not transferred to UxRXREG when it is full (i.e., no UxRXREG data is overwritten)
0 = When an Overflow Error (OERR) condition is detected, the RX shifter stops accepting new data (Legacy mode)

bit 6 **URXINV:** UART Receive Polarity bit
1 = Inverts RX polarity; Idle state is low
0 = Input is not inverted; Idle state is high

bit 5-4 **STSEL[1:0]:** Number of Stop Bits Selection bits
11 = 2 Stop bits sent, 1 checked at receive
10 = 2 Stop bits sent, 2 checked at receive
01 = 1.5 Stop bits sent, 1.5 checked at receive
00 = 1 Stop bit sent, 1 checked at receive

bit 3 **C0EN:** Enable Legacy Checksum (C0) Transmit and Receive bit
1 = Checksum Mode 1 (enhanced LIN checksum in LIN mode; add all TX/RX words in all other modes)
0 = Checksum Mode 0 (legacy LIN checksum in LIN mode; not used in all other modes)

© 2018-2019 Microchip Technology Inc.

REGISTER 15-2: UxMODEH: UARTx CONFIGURATION REGISTER HIGH (CONTINUED)

bit 2 **UTXINV:** UART Transmit Polarity bit
`1` = Inverts TX polarity; TX is low in Idle state
`0` = Output data is not inverted; TX output is high in Idle state

bit 1-0 **FLO[1:0]:** Flow Control Enable bits (only valid when MOD[3:0] = `0xxx`)
`11` = Reserved
`10` = $\overline{\text{RTS}}$-$\overline{\text{DSR}}$ (for TX side)/$\overline{\text{CTS}}$-DTR (for RX side) hardware flow control
`01` = XON/XOFF software flow control
`00` = Flow control off

REGISTER 15-3: UxSTA: UARTx STATUS REGISTER

R/W-0	R/W-0	R/W-0	R/W-0	R/W-0	R/W-0	R/W-0	R/W-0
TXMTIE	PERIE	ABDOVE	CERIE	FERIE	RXBKIE	OERIE	TXCIE
bit 15							bit 8

R-1	R-0	HS/R/W-0	HS/R/W-0	R-0	HS/R/W-0	HS/R/W-0	R/W-0
TRMT	PERR	ABDOVF	CERIF	FERR	RXBKIF	OERR	TXCIF
bit 7							bit 0

Legend:	HS = Hardware Settable bit		
R = Readable bit	W = Writable bit	U = Unimplemented bit, read as ‘0’	
-n = Value at POR	‘1’ = Bit is set	‘0’ = Bit is cleared	x = Bit is unknown

bit 15 **TXMTIE:** Transmit Shifter Empty Interrupt Enable bit
1 = Interrupt is enabled
0 = Interrupt is disabled

bit 14 **PERIE:** Parity Error Interrupt Enable bit
1 = Interrupt is enabled
0 = Interrupt is disabled

bit 13 **ABDOVE:** Auto-Baud Rate Acquisition Interrupt Enable bit
1 = Interrupt is enabled
0 = Interrupt is disabled

bit 12 **CERIE:** Checksum Error Interrupt Enable bit
1 = Interrupt is enabled
0 = Interrupt is disabled

bit 11 **FERIE:** Framing Error Interrupt Enable bit
1 = Interrupt is enabled
0 = Interrupt is disabled

bit 10 **RXBKIE:** Receive Break Interrupt Enable bit
1 = Interrupt is enabled
0 = Interrupt is disabled

bit 9 **OERIE:** Receive Buffer Overflow Interrupt Enable bit
1 = Interrupt is enabled
0 = Interrupt is disabled

bit 8 **TXCIE:** Transmit Collision Interrupt Enable bit
1 = Interrupt is enabled
0 = Interrupt is disabled

bit 7 **TRMT:** Transmit Shifter Empty Interrupt Flag bit (read-only)
1 = Transmit Shift Register (TSR) is empty (end of last Stop bit when STPMD = 1 or middle of first Stop bit when STPMD = 0)
0 = Transmit Shift Register is not empty

bit 6 **PERR:** Parity Error/Address Received/Forward Frame Interrupt Flag bit
LIN and Parity Modes:
1 = Parity error detected
0 = No parity error detected
Address Mode:
1 = Address received
0 = No address detected
All Other Modes:
Not used.

© 2018-2019 Microchip Technology Inc.

REGISTER 15-3: UxSTA: UARTx STATUS REGISTER (CONTINUED)

bit 5 **ABDOVF:** Auto-Baud Rate Acquisition Interrupt Flag bit (must be cleared by software)
1 = BRG rolled over during the auto-baud rate acquisition sequence (must be cleared in software)
0 = BRG has not rolled over during the auto-baud rate acquisition sequence

bit 4 **CERIF:** Checksum Error Interrupt Flag bit (must be cleared by software)
1 = Checksum error
0 = No checksum error

bit 3 **FERR:** Framing Error Interrupt Flag bit
1 = Framing Error: Inverted level of the Stop bit corresponding to the topmost character in the buffer; propagates through the buffer with the received character
0 = No framing error

bit 2 **RXBKIF:** Receive Break Interrupt Flag bit (must be cleared by software)
1 = A Break was received
0 = No Break was detected

bit 1 **OERR:** Receive Buffer Overflow Interrupt Flag bit (must be cleared by software)
1 = Receive buffer has overflowed
0 = Receive buffer has not overflowed

bit 0 **TXCIF:** Transmit Collision Interrupt Flag bit (must be cleared by software)
1 = Transmitted word is not equal to the received word
0 = Transmitted word is equal to the received word

REGISTER 15-4: UxSTAH: UARTx STATUS REGISTER HIGH

U-0	R/W-0	R/W-0	R/W-0	U-0	R/W-0	R/W-0	R/W-0
—	UTXISEL2	UTXISEL1	UTXISEL0	—	URXISEL2(1)	URXISEL1(1)	URXISEL0(1)
bit 15							bit 8

HS/R/W-0	R/W-0	R/S-1	R-0	R-1	R-1	R/S-1	R-0
TXWRE	STPMD	UTXBE	UTXBF	RIDLE	XON	URXBE	URXBF
bit 7							bit 0

Legend:	HS = Hardware Settable bit	S = Settable bit	
R = Readable bit	W = Writable bit	U = Unimplemented bit, read as ‘0’	
-n = Value at POR	‘1’ = Bit is set	‘0’ = Bit is cleared	x = Bit is unknown

bit 15 **Unimplemented:** Read as ‘0’

bit 14-12 **UTXISEL[2:0]:** UART Transmit Interrupt Select bits
111 = Sets transmit interrupt when there is one empty slot left in the buffer
...
010 = Sets transmit interrupt when there are six empty slots or more in the buffer
001 = Sets transmit interrupt when there are seven empty slots or more in the buffer
000 = Sets transmit interrupt when there are eight empty slots in the buffer; TX buffer is empty

bit 11 **Unimplemented:** Read as ‘0’

bit 10-8 **URXISEL[2:0]:** UART Receive Interrupt Select bits(1)
111 = Triggers receive interrupt when there are eight words in the buffer; RX buffer is full
...
001 = Triggers receive interrupt when there are two words or more in the buffer
000 = Triggers receive interrupt when there is one word or more in the buffer

bit 7 **TXWRE:** TX Write Transmit Error Status bit
LIN and Parity Modes:
1 = A new byte was written when the buffer was full or when P2[8:0] = 0 (must be cleared by software)
0 = No error
Address Detect Mode:
1 = A new byte was written when the buffer was full or to P1[8:0] when P1x was full (must be cleared by software)
0 = No error
Other Modes:
1 = A new byte was written when the buffer was full (must be cleared by software)
0 = No error

bit 6 **STPMD:** Stop Bit Detection Mode bit
1 = Triggers RXIF at the end of the last Stop bit
0 = Triggers RXIF in the middle of the first (or second, depending on the STSEL[1:0] setting) Stop bit

bit 5 **UTXBE:** UART TX Buffer Empty Status bit
1 = Transmit buffer is empty; writing ‘1’ when UTXEN = 0 will reset the TX FIFO Pointers and counters
0 = Transmit buffer is not empty

bit 4 **UTXBF:** UART TX Buffer Full Status bit
1 = Transmit buffer is full
0 = Transmit buffer is not full

bit 3 **RIDLE:** Receive Idle bit
1 = UART RX line is in the Idle state
0 = UART RX line is receiving something

Note 1: The receive watermark interrupt is not set if PERR or FERR is set and the corresponding IE bit is set.

© 2018-2019 Microchip Technology Inc.

REGISTER 15-4: UxSTAH: UARTx STATUS REGISTER HIGH (CONTINUED)

bit 2 **XON:** UART in XON Mode bit
Only valid when FLO[1:0] control bits are set to XON/XOFF mode.
1 = UART has received XON
0 = UART has not received XON or XOFF was received

bit 1 **URXBE:** UART RX Buffer Empty Status bit
1 = Receive buffer is empty; writing '1' when URXEN = 0 will reset the RX FIFO Pointers and counters
0 = Receive buffer is not empty

bit 0 **URXBF:** UART RX Buffer Full Status bit
1 = Receive buffer is full
0 = Receive buffer is not full

Note 1: The receive watermark interrupt is not set if PERR or FERR is set and the corresponding IE bit is set.

REGISTER 15-5: UxBRG: UARTx BAUD RATE REGISTER

R/W-0	R/W-0	R/W-0	R/W-0	R/W-0	R/W-0	R/W-0	R/W-0
BRG[15:8]							
bit 15							bit 8

R/W-0	R/W-0	R/W-0	R/W-0	R/W-0	R/W-0	R/W-0	R/W-0
BRG[7:0]							
bit 7							bit 0

Legend:			
R = Readable bit	W = Writable bit	U = Unimplemented bit, read as ‘0’	
-n = Value at POR	‘1’ = Bit is set	‘0’ = Bit is cleared	x = Bit is unknown

bit 15 **BRG[15:0]:** Baud Rate Divisor bits

REGISTER 15-6: UxBRGH: UARTx BAUD RATE REGISTER HIGH

U-0	U-0	U-0	U-0	U-0	U-0	U-0	U-0
—	—	—	—	—	—	—	—
bit 15							bit 8

U-0	U-0	U-0	U-0	R/W-0	R/W-0	R/W-0	R/W-0
—	—	—	—	BRG[19:16]			
bit 7							bit 0

Legend:			
R = Readable bit	W = Writable bit	U = Unimplemented bit, read as ‘0’	
-n = Value at POR	‘1’ = Bit is set	‘0’ = Bit is cleared	x = Bit is unknown

bit 15-4 **Unimplemented:** Read as ‘0’

bit 3-0 **BRG[19:16]:** Baud Rate Divisor bits

© 2018-2019 Microchip Technology Inc.

REGISTER 15-7: UxRXREG: UARTx RECEIVE BUFFER REGISTER

U-0	U-0	U-0	U-0	U-0	U-0	U-0	U-0
—	—	—	—	—	—	—	—
bit 15							bit 8

R-x	R-x	R-x	R-x	R-x	R-x	R-x	R-x
RXREG[7:0]							
bit 7							bit 0

Legend:			
R = Readable bit	W = Writable bit	U = Unimplemented bit, read as ‘0’	
-n = Value at POR	‘1’ = Bit is set	‘0’ = Bit is cleared	x = Bit is unknown

bit 15-8 **Unimplemented:** Read as ‘0’

bit 7-0 **RXREG[7:0]:** Received Character Data bits 7-0

REGISTER 15-8: UxTXREG: UARTx TRANSMIT BUFFER REGISTER

W-x	U-0	U-0	U-0	U-0	U-0	U-0	U-0
LAST	—	—	—	—	—	—	—
bit 15							bit 8

W-x	W-x	W-x	W-x	W-x	W-x	W-x	W-x
TXREG[7:0]							
bit 7							bit 0

Legend:			
R = Readable bit	W = Writable bit	U = Unimplemented bit, read as ‘0’	
-n = Value at POR	‘1’ = Bit is set	‘0’ = Bit is cleared	x = Bit is unknown

bit 15 **LAST:** Last Byte Indicator for Smart Card Support bit

bit 14-8 **Unimplemented:** Read as ‘0’

bit 7-0 **TXREG[7:0]:** Transmitted Character Data bits 7-0
If the buffer is full, further writes to the buffer are ignored.

REGISTER 15-9: UxP1: UARTx TIMING PARAMETER 1 REGISTER

U-0	U-0	U-0	U-0	U-0	U-0	U-0	R/W-0
—	—	—	—	—	—	—	P1[8]
bit 15							bit 8

R/W-0	R/W-0	R/W-0	R/W-0	R/W-0	R/W-0	R/W-0	R/W-0
P1[7:0]							
bit 7							bit 0

Legend:			
R = Readable bit	W = Writable bit	U = Unimplemented bit, read as ‘0’	
-n = Value at POR	‘1’ = Bit is set	‘0’ = Bit is cleared	x = Bit is unknown

bit 15-9 **Unimplemented:** Read as ‘0’

bit 8-0 **P1[8:0]:** Parameter 1 bits

DMX TX:
Number of Bytes to Transmit – 1 (not including Start code).

LIN Master TX:
PID to transmit (bits[5:0]).

Asynchronous TX with Address Detect:
Address to transmit. A ‘1’ is automatically inserted into bit 9 (bits[7:0]).

Smart Card Mode:
Guard Time Counter bits. This counter is operated on the bit clock whose period is always equal to one ETU (bits[8:0]).

Other Modes:
Not used.

© 2018-2019 Microchip Technology Inc.

REGISTER 15-10: UxP2: UARTx TIMING PARAMETER 2 REGISTER

U-0	U-0	U-0	U-0	U-0	U-0	U-0	R/W-0
—	—	—	—	—	—	—	P2[8]
bit 15							bit 8

R/W-0	R/W-0	R/W-0	R/W-0	R/W-0	R/W-0	R/W-0	R/W-0
P2[7:0]							
bit 7							bit 0

Legend:			
R = Readable bit	W = Writable bit	U = Unimplemented bit, read as ‘0’	
-n = Value at POR	‘1’ = Bit is set	‘0’ = Bit is cleared	x = Bit is unknown

bit 15-9 **Unimplemented:** Read as ‘0’

bit 8-0 **P2[8:0]:** Parameter 2 bits

DMX RX:
The first byte number to receive – 1, not including Start code (bits[8:0]).

LIN Slave TX:
Number of bytes to transmit (bits[7:0]).

Asynchronous RX with Address Detect:
Address to start matching (bits[7:0]).

Smart Card Mode:
Block Time Counter bits. This counter is operated on the bit clock whose period is always equal to one ETU (bits[8:0]).

Other Modes:
Not used.

REGISTER 15-11: UxP3: UARTx TIMING PARAMETER 3 REGISTER

R/W-0	R/W-0	R/W-0	R/W-0	R/W-0	R/W-0	R/W-0	R/W-0
P3[15:8]							
bit 15							bit 8

R/W-0	R/W-0	R/W-0	R/W-0	R/W-0	R/W-0	R/W-0	R/W-0
P3[7:0]							
bit 7							bit 0

Legend:			
R = Readable bit	W = Writable bit	U = Unimplemented bit, read as ‘0’	
-n = Value at POR	‘1’ = Bit is set	‘0’ = Bit is cleared	x = Bit is unknown

bit 15-0 **P3[15:0]:** Parameter 3 bits

DMX RX:
The last byte number to receive – 1, not including Start code (bits[8:0]).

LIN Slave RX:
Number of bytes to receive (bits[7:0]).

Asynchronous RX:
Used to mask the UxP2 address bits; 1 = P2 address bit is used, 0 = P2 address bit is masked off (bits[7:0]).

Smart Card Mode:
Waiting Time Counter bits (bits[15:0]).

Other Modes:
Not used.

REGISTER 15-12: UxP3H: UARTx TIMING PARAMETER 3 REGISTER HIGH

U-0	U-0	U-0	U-0	U-0	U-0	U-0	U-0
—	—	—	—	—	—	—	—
bit 15							bit 8

R/W-0	R/W-0	R/W-0	R/W-0	R/W-0	R/W-0	R/W-0	R/W-0
P3[23:16]							
bit 7							bit 0

Legend:			
R = Readable bit	W = Writable bit	U = Unimplemented bit, read as ‘0’	
-n = Value at POR	‘1’ = Bit is set	‘0’ = Bit is cleared	x = Bit is unknown

bit 15-8 **Unimplemented:** Read as ‘0’

bit 7-0 **P3[23:16]:** Parameter 3 High bits

Smart Card Mode:
Waiting Time Counter bits (bits[23:16]).

Other Modes:
Not used.

© 2018-2019 Microchip Technology Inc.

REGISTER 15-13: UxTXCHK: UARTx TRANSMIT CHECKSUM REGISTER

U-0	U-0	U-0	U-0	U-0	U-0	U-0	U-0
—	—	—	—	—	—	—	—
bit 15							bit 8

R/W-0	R/W-0	R/W-0	R/W-0	R/W-0	R/W-0	R/W-0	R/W-0
TXCHK[7:0]							
bit 7							bit 0

Legend:			
R = Readable bit	W = Writable bit	U = Unimplemented bit, read as ‘0’	
-n = Value at POR	‘1’ = Bit is set	‘0’ = Bit is cleared	x = Bit is unknown

bit 15-8 **Unimplemented:** Read as ‘0’

bit 7-0 **TXCHK[7:0]:** Transmit Checksum bits (calculated from TX words)

LIN Modes:
C0EN = 1: Sum of all transmitted data + addition carries, including PID.
C0EN = 0: Sum of all transmitted data + addition carries, excluding PID.

LIN Slave:
Cleared when Break is detected.

LIN Master/Slave:
Cleared when Break is detected.

Other Modes:
C0EN = 1: Sum of every byte transmitted + addition carries.
C0EN = 0: Value remains unchanged.

REGISTER 15-14: UxRXCHK: UARTx RECEIVE CHECKSUM REGISTER

U-0	U-0	U-0	U-0	U-0	U-0	U-0	U-0
—	—	—	—	—	—	—	—
bit 15							bit 8

R/W-0	R/W-0	R/W-0	R/W-0	R/W-0	R/W-0	R/W-0	R/W-0
RXCHK[7:0]							
bit 7							bit 0

Legend:			
R = Readable bit	W = Writable bit	U = Unimplemented bit, read as ‘0’	
-n = Value at POR	‘1’ = Bit is set	‘0’ = Bit is cleared	x = Bit is unknown

bit 15-8 **Unimplemented:** Read as ‘0’

bit 7-0 **RXCHK[7:0]:** Receive Checksum bits (calculated from RX words)

LIN Modes:
C0EN = 1: Sum of all received data + addition carries, including PID.
C0EN = 0: Sum of all received data + addition carries, excluding PID.

LIN Slave:
Cleared when Break is detected.

LIN Master/Slave:
Cleared when Break is detected.

Other Modes:
C0EN = 1: Sum of every byte received + addition carries.
C0EN = 0: Value remains unchanged.

© 2018-2019 Microchip Technology Inc.

REGISTER 15-15: UxSCCON: UARTx SMART CARD CONFIGURATION REGISTER

U-0	U-0	U-0	U-0	U-0	U-0	U-0	U-0
—	—	—	—	—	—	—	—
bit 15							bit 8

U-0	U-0	R/W-0	R/W-0	R/W-0	R/W-0	R/W-0	U-0
—	—	TXRPT1	TXRPT0	CONV	T0PD	PRTCL	—
bit 7							bit 0

Legend:			
R = Readable bit	W = Writable bit	U = Unimplemented bit, read as ‘0’	
-n = Value at POR	‘1’ = Bit is set	‘0’ = Bit is cleared	x = Bit is unknown

bit 15-6 **Unimplemented:** Read as ‘0’

bit 5-4 **TXRPT[1:0]:** Transmit Repeat Selection bits
11 = Retransmit the error byte four times
10 = Retransmit the error byte three times
01 = Retransmit the error byte twice
00 = Retransmit the error byte once

bit 3 **CONV:** Logic Convention Selection bit
1 = Inverse logic convention
0 = Direct logic convention

bit 2 **T0PD:** Pull-Down Duration for T = 0 Error Handling bit
1 = Two ETUs
0 = One ETU

bit 1 **PRTCL:** Smart Card Protocol Selection bit
1 = T = 1
0 = T = 0

bit 0 **Unimplemented:** Read as ‘0’

REGISTER 15-16: UxSCINT: UARTx SMART CARD INTERRUPT REGISTER

U-0	U-0	HS/R/W-0	HS/R/W-0	U-0	HS/R/W-0	HS/R/W-0	HS/R/W-0
—	—	RXRPTIF	TXRPTIF	—	BTCIF	WTCIF	GTCIF
bit 15							bit 8

U-0	U-0	R/W-0	R/W-0	U-0	R/W-0	R/W-0	R/W-0
—	—	RXRPTIE	TXRPTIE	—	BTCIE	WTCIE	GTCIE
bit 7							bit 0

Legend:	HS = Hardware Settable bit		
R = Readable bit	W = Writable bit	U = Unimplemented bit, read as ‘0’	
-n = Value at POR	‘1’ = Bit is set	‘0’ = Bit is cleared	x = Bit is unknown

bit 15-14 **Unimplemented:** Read as ‘0’

bit 13 **RXRPTIF:** Receive Repeat Interrupt Flag bit
1 = Parity error has persisted after the same character has been received five times (four retransmits)
0 = Flag is cleared

bit 12 **TXRPTIF:** Transmit Repeat Interrupt Flag bit
1 = Line error has been detected after the last retransmit per TXRPT[1:0]
0 = Flag is cleared

bit 11 **Unimplemented:** Read as ‘0’

bit 10 **BTCIF:** Block Time Counter Interrupt Flag bit
1 = Block Time Counter has reached 0
0 = Block Time Counter has not reached 0

bit 9 **WTCIF:** Waiting Time Counter Interrupt Flag bit
1 = Waiting Time Counter has reached 0
0 = Waiting Time Counter has not reached 0

bit 8 **GTCIF:** Guard Time Counter Interrupt Flag bit
1 = Guard Time Counter has reached 0
0 = Guard Time Counter has not reached 0

bit 7-6 **Unimplemented:** Read as ‘0’

bit 5 **RXRPTIE:** Receive Repeat Interrupt Enable bit
1 = An interrupt is invoked when a parity error has persisted after the same character has been received five times (four retransmits)
0 = Interrupt is disabled

bit 4 **TXRPTIE:** Transmit Repeat Interrupt Enable bit
1 = An interrupt is invoked when a line error is detected after the last retransmit per TXRPT[1:0] has been completed
0 = Interrupt is disabled

bit 3 **Unimplemented:** Read as ‘0’

bit 2 **BTCIE:** Block Time Counter Interrupt Enable bit
1 = Block Time Counter interrupt is enabled
0 = Block Time Counter interrupt is disabled

bit 1 **WTCIE:** Waiting Time Counter Interrupt Enable bit
1 = Waiting Time Counter interrupt is enabled
0 = Waiting Time Counter Interrupt is disabled

bit 0 **GTCIE:** Guard Time Counter interrupt enable bit
1 = Guard Time Counter interrupt is enabled
0 = Guard Time Counter interrupt is disabled

© 2018-2019 Microchip Technology Inc.

REGISTER 15-17: UxINT: UARTx INTERRUPT REGISTER

U-0	U-0	U-0	U-0	U-0	U-0	U-0	U-0
—	—	—	—	—	—	—	—
bit 15							bit 8

R/W-0, HS	R/W-0, HS	U-0	U-0	U-0	R/W-0	U-0	U-0
WUIF	ABDIF	—	—	—	ABDIE	—	—
bit 7							bit 0

Legend:	HS = Hardware Settable bit		
R = Readable bit	W = Writable bit	U = Unimplemented bit, read as ‘0’	
-n = Value at POR	‘1’ = Bit is set	‘0’ = Bit is cleared	x = Bit is unknown

bit 15-8 **Unimplemented:** Read as ‘0’

bit 7 **WUIF:** Wake-up Interrupt Flag bit
- 1 = Sets when WAKE = 1 and RX makes a ‘1’-to-‘0’ transition; triggers event interrupt (must be cleared by software)
- 0 = WAKE is not enabled or WAKE is enabled, but no wake-up event has occurred

bit 6 **ABDIF:** Auto-Baud Completed Interrupt Flag bit
- 1 = Sets when ABD sequence makes the final ‘1’-to-‘0’ transition; triggers event interrupt (must be cleared by software)
- 0 = ABAUD is not enabled or ABAUD is enabled but auto-baud has not completed

bit 5-3 **Unimplemented:** Read as ‘0’

bit 2 **ABDIE:** Auto-Baud Completed Interrupt Enable Flag bit
- 1 = Allows ABDIF to set an event interrupt
- 0 = ABDIF does not set an event interrupt

bit 1-0 **Unimplemented:** Read as ‘0’

NOTES:

© 2018-2019 Microchip Technology Inc.

16.0 SERIAL PERIPHERAL INTERFACE (SPI)

Note 1:	This data sheet summarizes the features of the dsPIC33CK64MP105 family of devices. It is not intended to be a comprehensive reference source. To complement the information in this data sheet, refer to **"Serial Peripheral Interface (SPI) with Audio Codec Support"** (www.microchip.com/DS70005136) in the *"dsPIC33/PIC24 Family Reference Manual"*.

The Serial Peripheral Interface (SPI) module is a synchronous serial interface, useful for communicating with other peripheral or microcontroller devices. These peripheral devices may be serial EEPROMs, shift registers, display drivers, A/D Converters, etc. The SPI module is compatible with the Motorola® SPI and SIOP interfaces. All devices in the dsPIC33CK64MP105 family include three SPI modules. On 48-pin devices, SPI instance SPI2 can work up to 50 MHz speed when selected as a non-PPS pin. The selection is done using the SPI2PIN bit (FDEVOPT[13]). If the bit for SPI2PIN is '1', the PPS pin will be used. When SPI2PIN is '0', the SPI signals are routed to dedicated pins.

The module supports operation in two Buffer modes. In Standard mode, data is shifted through a single serial buffer. In Enhanced Buffer mode, data is shifted through a FIFO buffer. The FIFO level depends on the configured mode.

Note:	FIFO depth for this device is four (in 8-Bit Data mode).

Variable length data can be transmitted and received, from 2 to 32 bits.

Note:	Do not perform Read-Modify-Write operations (such as bit-oriented instructions) on the SPIxBUF register in either Standard or Enhanced Buffer mode.

The module also supports a basic framed SPI protocol while operating in either Master or Slave mode. A total of four framed SPI configurations are supported.

The module also supports Audio modes. Four different Audio modes are available.

- I^2S mode
- Left Justified mode
- Right Justified mode
- PCM/DSP mode

In each of these modes, the serial clock is free-running and audio data is always transferred.

If an audio protocol data transfer takes place between two devices, then usually one device is the Master and the other is the Slave. However, audio data can be transferred between two Slaves. Because the audio protocols require free-running clocks, the Master can be a third-party controller. In either case, the Master generates two free-running clocks: SCKx and LRC (Left, Right Channel Clock/$\overline{SS}$x/FSYNC).

The SPI serial interface consists of four pins:

- SDIx: Serial Data Input
- SDOx: Serial Data Output
- SCKx: Shift Clock Input or Output
- $\overline{SS}$x: Active-Low Slave Select or Frame Synchronization I/O Pulse

The SPI module can be configured to operate using two, three or four pins. In the 3-pin mode, $\overline{SS}$x is not used. In the 2-pin mode, both SDOx and $\overline{SS}$x are not used.

The SPI module has the ability to generate three interrupts reflecting the events that occur during the data communication. The following types of interrupts can be generated:

1. Receive interrupts are signalled by SPIxRXIF. This event occurs when:
   - RX watermark interrupt
   - SPIROV = 1
   - SPIRBF = 1
   - SPIRBE = 1

   provided the respective mask bits are enabled in SPIxIMSKL/H.
2. Transmit interrupts are signalled by SPIxTXIF. This event occurs when:
   - TX watermark interrupt
   - SPITUR = 1
   - SPITBF = 1
   - SPITBE = 1

   provided the respective mask bits are enabled in SPIxIMSKL/H.
3. General interrupts are signalled by SPIxGIF. This event occurs when:
   - FRMERR = 1
   - SPIBUSY = 1
   - SRMT = 1

   provided the respective mask bits are enabled in SPIxIMSKL/H.

Block diagrams of the module in Standard and Enhanced modes are shown in Figure 16-1 and Figure 16-2.

Note:	In this section, the SPI modules are referred to together as SPIx, or separately as SPI1, SPI2 or SPI3. Special Function Registers will follow a similar notation. For example, SPIxCON1 and SPIxCON2 refer to the control registers for any of the three SPI modules.

To set up the SPIx module for the Standard Master mode of operation:

1. If using interrupts:
   a) Clear the interrupt flag bits in the respective IFSx register.
   b) Set the interrupt enable bits in the respective IECx register.
   c) Write the SPIxIP bits in the respective IPCx register to set the interrupt priority.
2. Write the desired settings to the SPIxCON1L and SPIxCON1H registers with the MSTEN bit (SPIxCON1L[5]) = 1.
3. Clear the SPIROV bit (SPIxSTATL[6]).
4. Enable SPIx operation by setting the SPIEN bit (SPIxCON1L[15]).
5. Write the data to be transmitted to the SPIxBUFL and SPIxBUFH registers. Transmission (and reception) will start as soon as data is written to the SPIxBUFL and SPIxBUFH registers.

To set up the SPIx module for the Standard Slave mode of operation:

1. Clear the SPIxBUF registers.
2. If using interrupts:
   a) Clear the SPIxBUFL and SPIxBUFH registers.
   b) Set the interrupt enable bits in the respective IECx register.
   c) Write the SPIxIP bits in the respective IPCx register to set the interrupt priority.
3. Write the desired settings to the SPIxCON1L, SPIxCON1H and SPIxCON2L registers with the MSTEN bit (SPIxCON1L[5]) = 0.
4. Clear the SMP bit.
5. If the CKE bit (SPIxCON1L[8]) is set, then the SSEN bit (SPIxCON1L[7]) must be set to enable the $\overline{SS}$x pin.
6. Clear the SPIROV bit (SPIxSTATL[6]).
7. Enable SPIx operation by setting the SPIEN bit (SPIxCON1L[15]).

© 2018-2019 Microchip Technology Inc.

FIGURE 16-1: SPIx MODULE BLOCK DIAGRAM (STANDARD MODE)

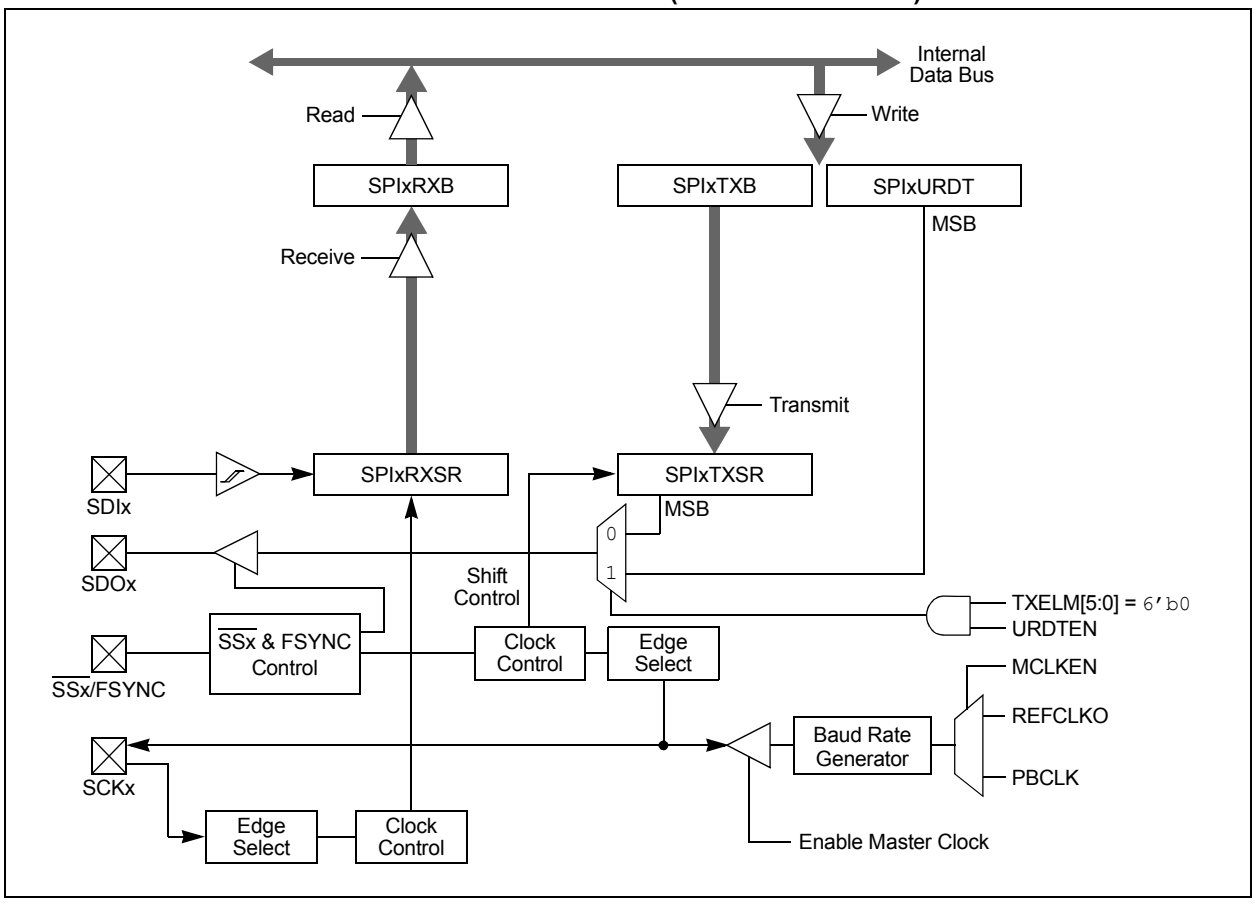

To set up the SPIx module for the Enhanced Buffer Master mode of operation:

1. If using interrupts:
   a) Clear the interrupt flag bits in the respective IFSx register.
   b) Set the interrupt enable bits in the respective IECx register.
   c) Write the SPIxIP bits in the respective IPCx register.
2. Write the desired settings to the SPIxCON1L, SPIxCON1H and SPIxCON2L registers with MSTEN (SPIxCON1L[5]) = `1`.
3. Clear the SPIROV bit (SPIxSTATL[6]).
4. Select Enhanced Buffer mode by setting the ENHBUF bit (SPIxCON1L[0]).
5. Enable SPIx operation by setting the SPIEN bit (SPIxCON1L[15]).
6. Write the data to be transmitted to the SPIxBUFL and SPIxBUFH registers. Transmission (and reception) will start as soon as data is written to the SPIxBUFL and SPIxBUFH registers.

To set up the SPIx module for the Enhanced Buffer Slave mode of operation:

1. Clear the SPIxBUFL and SPIxBUFH registers.
2. If using interrupts:
   a) Clear the interrupt flag bits in the respective IFSx register.
   b) Set the interrupt enable bits in the respective IECx register.
   c) Write the SPIxIP bits in the respective IPCx register to set the interrupt priority.
3. Write the desired settings to the SPIxCON1L, SPIxCON1H and SPIxCON2L registers with the MSTEN bit (SPIxCON1L[5]) = `0`.
4. Clear the SMP bit.
5. If the CKE bit is set, then the SSEN bit must be set, thus enabling the $\overline{\text{SS}}$x pin.
6. Clear the SPIROV bit (SPIxSTATL[6]).
7. Select Enhanced Buffer mode by setting the ENHBUF bit (SPIxCON1L[0]).
8. Enable SPIx operation by setting the SPIEN bit (SPIxCON1L[15]).

FIGURE 16-2: SPIx MODULE BLOCK DIAGRAM (ENHANCED MODE)

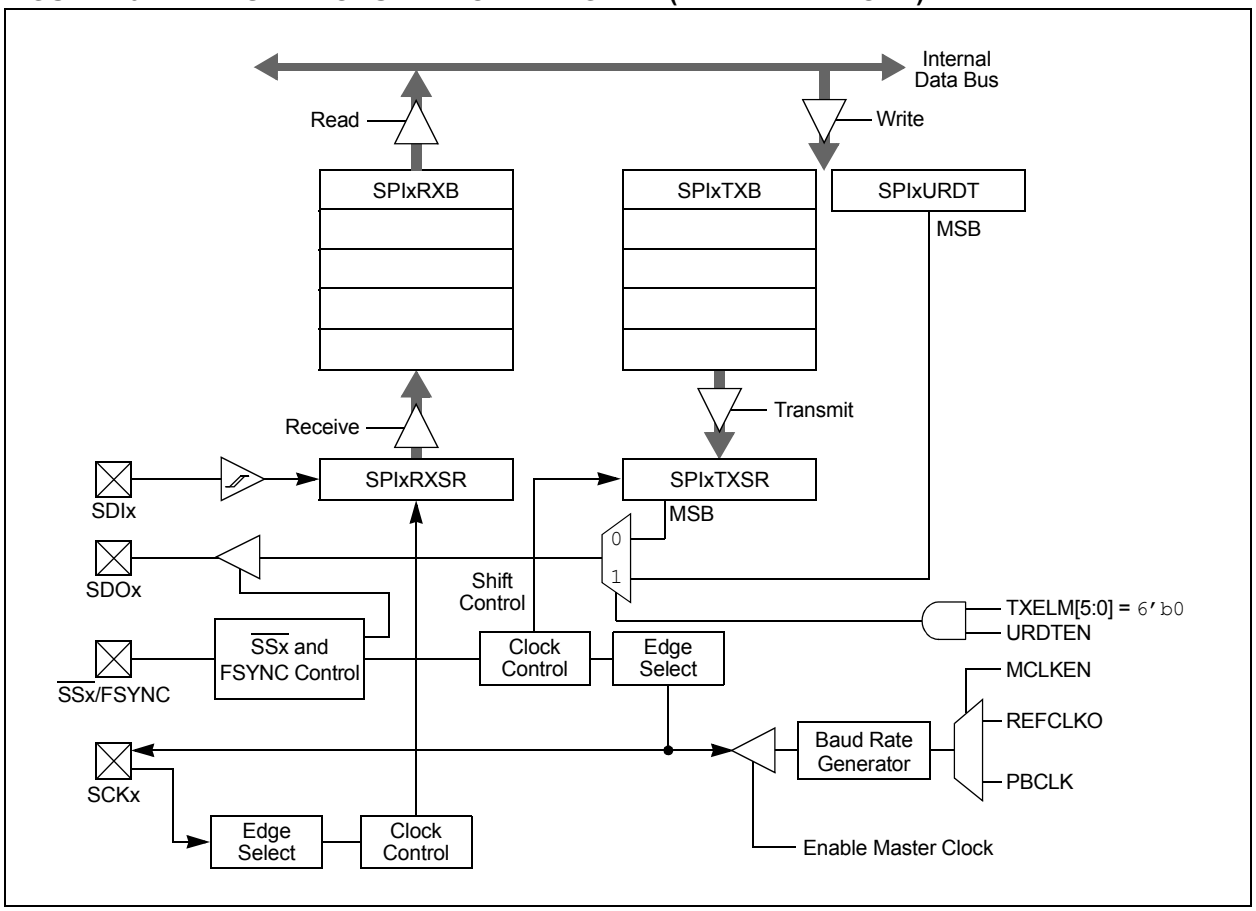

© 2018-2019 Microchip Technology Inc.

To set up the SPIx module for Audio mode:

1. Clear the SPIxBUFL and SPIxBUFH registers.
2. If using interrupts:
   a) Clear the interrupt flag bits in the respective IFSx register.
   b) Set the interrupt enable bits in the respective IECx register.
   a) Write the SPIxIP bits in the respective IPCx register to set the interrupt priority.
3. Write the desired settings to the SPIxCON1L, SPIxCON1H and SPIxCON2L registers with AUDEN (SPIxCON1H[15]) = `1`.
4. Clear the SPIROV bit (SPIxSTATL[6]).
5. Enable SPIx operation by setting the SPIEN bit (SPIxCON1L[15]).
6. Write the data to be transmitted to the SPIxBUFL and SPIxBUFH registers. Transmission (and reception) will start as soon as data is written to the SPIxBUFL and SPIxBUFH registers.

16.1 SPI Control/Status Registers

REGISTER 16-1: SPIxCON1L: SPIx CONTROL REGISTER 1 LOW

R/W-0	U-0	R/W-0	R/W-0	R/W-0	R/W-0	R/W-0	R/W-0
SPIEN	—	SPISIDL	DISSDO	MODE32(1,4)	MODE16(1,4)	SMP	CKE(1)
bit 15							bit 8

R/W-0	R/W-0	R/W-0	R/W-0	R/W-0	R/W-0	R/W-0	R/W-0
SSEN(2)	CKP	MSTEN	DISSDI	DISSCK	MCLKEN(3)	SPIFE	ENHBUF
bit 7							bit 0

Legend:			
R = Readable bit	W = Writable bit	U = Unimplemented bit, read as ‘0’	
-n = Value at POR	‘1’ = Bit is set	‘0’ = Bit is cleared	x = Bit is unknown

bit 15 **SPIEN:** SPIx On bit
1 = Enables module
0 = Turns off and resets module, disables clocks, disables interrupt event generation, allows SFR modifications

bit 14 **Unimplemented:** Read as ‘0’

bit 13 **SPISIDL:** SPIx Stop in Idle Mode bit
1 = Halts in CPU Idle mode
0 = Continues to operate in CPU Idle mode

bit 12 **DISSDO:** Disable SDOx Output Port bit
1 = SDOx pin is not used by the module; pin is controlled by port function
0 = SDOx pin is controlled by the module

bit 11-10 **MODE32** and **MODE16:** Serial Word Length Select bits(1,4)

MODE32	MODE16	AUDEN	Communication
1	x	0	32-Bit
0	1		16-Bit
0	0		8-Bit
1	1	1	24-Bit Data, 32-Bit FIFO, 32-Bit Channel/64-Bit Frame
1	0		32-Bit Data, 32-Bit FIFO, 32-Bit Channel/64-Bit Frame
0	1		16-Bit Data, 16-Bit FIFO, 32-Bit Channel/64-Bit Frame
0	0		16-Bit FIFO, 16-Bit Channel/32-Bit Frame

bit 9 **SMP:** SPIx Data Input Sample Phase bit
Master Mode:
1 = Input data is sampled at the end of data output time
0 = Input data is sampled at the middle of data output time
Slave Mode:
Input data is always sampled at the middle of data output time, regardless of the SMP setting.

bit 8 **CKE:** SPIx Clock Edge Select bit(1)
1 = Transmit happens on transition from active clock state to Idle clock state
0 = Transmit happens on transition from Idle clock state to active clock state

Note 1: When AUDEN (SPIxCON1H[15]) = 1, this module functions as if CKE = 0, regardless of its actual value.
2: When FRMEN = 1, SSEN is not used.
3: MCLKEN can only be written when the SPIEN bit = 0.
4: This channel is not meaningful for DSP/PCM mode as LRC follows FRMSYPW.

© 2018-2019 Microchip Technology Inc.

REGISTER 16-1: SPIxCON1L: SPIx CONTROL REGISTER 1 LOW (CONTINUED)

bit 7 **SSEN:** Slave Select Enable bit (Slave mode)[2]
1 = $\overline{SSx}$ pin is used by the macro in Slave mode; $\overline{SSx}$ pin is used as the Slave select input
0 = $\overline{SSx}$ pin is not used by the macro ($\overline{SSx}$ pin will be controlled by the port I/O)

bit 6 **CKP:** Clock Polarity Select bit
1 = Idle state for clock is a high level; active state is a low level
0 = Idle state for clock is a low level; active state is a high level

bit 5 **MSTEN:** Master Mode Enable bit
1 = Master mode
0 = Slave mode

bit 4 **DISSDI:** Disable SDIx Input Port bit
1 = SDIx pin is not used by the module; pin is controlled by port function
0 = SDIx pin is controlled by the module

bit 3 **DISSCK:** Disable SCKx Output Port bit
1 = SCKx pin is not used by the module; pin is controlled by port function
0 = SCKx pin is controlled by the module

bit 2 **MCLKEN:** Master Clock Enable bit[3]
1 = Reference Clock (REFCLKO) is used by the BRG
0 = Peripheral Clock (F_P = F_{OSC}/2) is used by the BRG

bit 1 **SPIFE:** Frame Sync Pulse Edge Select bit
1 = Frame Sync pulse (Idle-to-active edge) coincides with the first bit clock
0 = Frame Sync pulse (Idle-to-active edge) precedes the first bit clock

bit 0 **ENHBUF:** Enhanced Buffer Enable bit
1 = Enhanced Buffer mode is enabled
0 = Enhanced Buffer mode is disabled

Note 1: When AUDEN (SPIxCON1H[15]) = 1, this module functions as if CKE = 0, regardless of its actual value.
2: When FRMEN = 1, SSEN is not used.
3: MCLKEN can only be written when the SPIEN bit = 0.
4: This channel is not meaningful for DSP/PCM mode as LRC follows FRMSYPW.

REGISTER 16-2: SPIxCON1H: SPIx CONTROL REGISTER 1 HIGH

R/W-0	R/W-0	R/W-0	R/W-0	R/W-0	R/W-0	R/W-0	R/W-0
AUDEN(1)	SPISGNEXT	IGNROV	IGNTUR	AUDMONO(2)	URDTEN(3)	AUDMOD1(4)	AUDMOD0(4)
bit 15							bit 8

R/W-0	R/W-0	R/W-0	R/W-0	R/W-0	R/W-0	R/W-0	R/W-0
FRMEN	FRMSYNC	FRMPOL	MSSEN	FRMSYPW	FRMCNT2	FRMCNT1	FRMCNT0
bit 7							bit 0

Legend:			
R = Readable bit	W = Writable bit	U = Unimplemented bit, read as ‘0’	
-n = Value at POR	‘1’ = Bit is set	‘0’ = Bit is cleared	x = Bit is unknown

bit 15 **AUDEN:** Audio Codec Support Enable bit(1)
- 1 = Audio protocol is enabled; MSTEN controls the direction of both SCKx and frame (a.k.a. LRC), and this module functions as if FRMEN = 1, FRMSYNC = MSTEN, FRMCNT[2:0] = 001 and SMP = 0, regardless of their actual values
- 0 = Audio protocol is disabled

bit 14 **SPISGNEXT:** SPIx Sign-Extend RX FIFO Read Data Enable bit
- 1 = Data from RX FIFO is sign-extended
- 0 = Data from RX FIFO is not sign-extended

bit 13 **IGNROV:** Ignore Receive Overflow bit
- 1 = A Receive Overflow (ROV) is NOT a critical error; during ROV, data in the FIFO is not overwritten by the receive data
- 0 = A ROV is a critical error that stops SPI operation

bit 12 **IGNTUR:** Ignore Transmit Underrun bit
- 1 = A Transmit Underrun (TUR) is NOT a critical error and data indicated by URDTEN is transmitted until the SPIxTXB is not empty
- 0 = A TUR is a critical error that stops SPI operation

bit 11 **AUDMONO:** Audio Data Format Transmit bit(2)
- 1 = Audio data is mono (i.e., each data word is transmitted on both left and right channels)
- 0 = Audio data is stereo

bit 10 **URDTEN:** Transmit Underrun Data Enable bit(3)
- 1 = Transmits data out of SPIxURDT register during Transmit Underrun conditions
- 0 = Transmits the last received data during Transmit Underrun conditions

bit 9-8 **AUDMOD[1:0]:** Audio Protocol Mode Selection bits(4)
- 11 = PCM/DSP mode
- 10 = Right Justified mode: This module functions as if SPIFE = 1, regardless of its actual value
- 01 = Left Justified mode: This module functions as if SPIFE = 1, regardless of its actual value
- 00 = I^2S mode: This module functions as if SPIFE = 0, regardless of its actual value

bit 7 **FRMEN:** Framed SPIx Support bit
- 1 = Framed SPIx support is enabled ($\overline{SSx}$ pin is used as the FSYNC input/output)
- 0 = Framed SPIx support is disabled

Note 1: AUDEN can only be written when the SPIEN bit = 0.
2: AUDMONO can only be written when the SPIEN bit = 0 and is only valid for AUDEN = 1.
3: URDTEN is only valid when IGNTUR = 1.
4: AUDMOD[1:0] can only be written when the SPIEN bit = 0 and is only valid when AUDEN = 1. When NOT in PCM/DSP mode, this module functions as if FRMSYPW = 1, regardless of its actual value.

© 2018-2019 Microchip Technology Inc.

REGISTER 16-2: SPIxCON1H: SPIx CONTROL REGISTER 1 HIGH (CONTINUED)

bit 6 **FRMSYNC:** Frame Sync Pulse Direction Control bit
1 = Frame Sync pulse input (Slave)
0 = Frame Sync pulse output (Master)

bit 5 **FRMPOL:** Frame Sync/Slave Select Polarity bit
1 = Frame Sync pulse/Slave select is active-high
0 = Frame Sync pulse/Slave select is active-low

bit 4 **MSSEN:** Master Mode Slave Select Enable bit
1 = SPIx Slave select support is enabled with polarity determined by FRMPOL ($\overline{SSx}$ pin is automatically driven during transmission in Master mode)
0 = Slave select SPIx support is disabled ($\overline{SSx}$ pin will be controlled by port I/O)

bit 3 **FRMSYPW:** Frame Sync Pulse-Width bit
1 = Frame Sync pulse is one serial word length wide (as defined by MODE[32,16]/WLENGTH[4:0])
0 = Frame Sync pulse is one clock (SCKx) wide

bit 2-0 **FRMCNT[2:0]:** Frame Sync Pulse Counter bits
Controls the number of serial words transmitted per Sync pulse.
111 = Reserved
110 = Reserved
101 = Generates a Frame Sync pulse on every 32 serial words
100 = Generates a Frame Sync pulse on every 16 serial words
011 = Generates a Frame Sync pulse on every 8 serial words
010 = Generates a Frame Sync pulse on every 4 serial words
001 = Generates a Frame Sync pulse on every 2 serial words (value used by audio protocols)
000 = Generates a Frame Sync pulse on each serial word

Note 1: AUDEN can only be written when the SPIEN bit = 0.
2: AUDMONO can only be written when the SPIEN bit = 0 and is only valid for AUDEN = 1.
3: URDTEN is only valid when IGNTUR = 1.
4: AUDMOD[1:0] can only be written when the SPIEN bit = 0 and is only valid when AUDEN = 1. When NOT in PCM/DSP mode, this module functions as if FRMSYPW = 1, regardless of its actual value.

REGISTER 16-3: SPIxCON2L: SPIx CONTROL REGISTER 2 LOW

U-0	U-0	U-0	U-0	U-0	U-0	U-0	U-0
—	—	—	—	—	—	—	—
bit 15							bit 8

U-0	U-0	U-0	R/W-0	R/W-0	R/W-0	R/W-0	R/W-0
—	—	—	WLENGTH[4:0](1,2)				
bit 7							bit 0

Legend:			
R = Readable bit	W = Writable bit	U = Unimplemented bit, read as ‘0’	
-n = Value at POR	‘1’ = Bit is set	‘0’ = Bit is cleared	x = Bit is unknown

bit 15-5 **Unimplemented:** Read as ‘0’

bit 4-0 **WLENGTH[4:0]:** Variable Word Length bits(1,2)

11111 = 32-bit data
11110 = 31-bit data
11101 = 30-bit data
11100 = 29-bit data
11011 = 28-bit data
11010 = 27-bit data
11001 = 26-bit data
11000 = 25-bit data
10111 = 24-bit data
10110 = 23-bit data
10101 = 22-bit data
10100 = 21-bit data
10011 = 20-bit data
10010 = 19-bit data
10001 = 18-bit data
10000 = 17-bit data
01111 = 16-bit data
01110 = 15-bit data
01101 = 14-bit data
01100 = 13-bit data
01011 = 12-bit data
01010 = 11-bit data
01001 = 10-bit data
01000 = 9-bit data
00111 = 8-bit data
00110 = 7-bit data
00101 = 6-bit data
00100 = 5-bit data
00011 = 4-bit data
00010 = 3-bit data
00001 = 2-bit data
00000 = See MODE[32,16] bits in SPIxCON1L[11:10]

Note 1: These bits are effective when AUDEN = 0 only.
2: Varying the length by changing these bits does not affect the depth of the TX/RX FIFO.

© 2018-2019 Microchip Technology Inc.

REGISTER 16-4: SPIxSTATL: SPIx STATUS REGISTER LOW

U-0	U-0	U-0	HS/R/C-0	HSC/R-0	U-0	U-0	HSC/R-0
—	—	—	FRMERR	SPIBUSY	—	—	SPITUR(1)
bit 15							bit 8

HSC/R-0	HS/R/C-0	HSC/R-1	U-0	HSC/R-1	U-0	HSC/R-0	HSC/R-0
SRMT	SPIROV	SPIRBE	—	SPITBE	—	SPITBF	SPIRBF
bit 7							bit 0

Legend:	C = Clearable bit	U = Unimplemented, read as ‘0’	
R = Readable bit	W = Writable bit	HSC = Hardware Settable/Clearable bit	
-n = Value at POR	‘1’ = Bit is set	‘0’ = Bit is cleared	HS = Hardware Settable bit

bit 15-13 **Unimplemented:** Read as ‘0’

bit 12 **FRMERR**: SPIx Frame Error Status bit
1 = Frame error is detected
0 = No frame error is detected

bit 11 **SPIBUSY:** SPIx Activity Status bit
1 = Module is currently busy with some transactions
0 = No ongoing transactions (at time of read)

bit 10-9 **Unimplemented:** Read as ‘0’

bit 8 **SPITUR:** SPIx Transmit Underrun Status bit(1)
1 = Transmit buffer has encountered a Transmit Underrun condition
0 = Transmit buffer does not have a Transmit Underrun condition

bit 7 **SRMT:** Shift Register Empty Status bit
1 = No current or pending transactions (i.e., neither SPIxTXB or SPIxTXSR contains data to transmit)
0 = Current or pending transactions

bit 6 **SPIROV:** SPIx Receive Overflow Status bit
1 = A new byte/half-word/word has been completely received when the SPIxRXB was full
0 = No overflow

bit 5 **SPIRBE:** SPIx RX Buffer Empty Status bit
1 = RX buffer is empty
0 = RX buffer is not empty
Standard Buffer Mode:
Automatically set in hardware when SPIxBUF is read from, reading SPIxRXB. Automatically cleared in hardware when SPIx transfers data from SPIxRXSR to SPIxRXB.
Enhanced Buffer Mode:
Indicates RXELM[5:0] = 000000.

bit 4 **Unimplemented:** Read as ‘0’

Note 1: SPITUR is cleared when SPIEN = 0. When IGNTUR = 1, SPITUR provides dynamic status of the Transmit Underrun condition, but does not stop RX/TX operation and does not need to be cleared by software.

REGISTER 16-4: SPIxSTATL: SPIx STATUS REGISTER LOW (CONTINUED)

bit 3 **SPITBE:** SPIx Transmit Buffer Empty Status bit

1 = SPIxTXB is empty
0 = SPIxTXB is not empty

Standard Buffer Mode:
Automatically set in hardware when SPIx transfers data from SPIxTXB to SPIxTXSR. Automatically cleared in hardware when SPIxBUF is written, loading SPIxTXB.

Enhanced Buffer Mode:
Indicates TXELM[5:0] = 000000.

bit 2 **Unimplemented:** Read as '0'

bit 1 **SPITBF:** SPIx Transmit Buffer Full Status bit

1 = SPIxTXB is full
0 = SPIxTXB not full

Standard Buffer Mode:
Automatically set in hardware when SPIxBUF is written, loading SPIxTXB. Automatically cleared in hardware when SPIx transfers data from SPIxTXB to SPIxTXSR.

Enhanced Buffer Mode:
Indicates TXELM[5:0] = 111111.

bit 0 **SPIRBF:** SPIx Receive Buffer Full Status bit

1 = SPIxRXB is full
0 = SPIxRXB is not full

Standard Buffer Mode:
Automatically set in hardware when SPIx transfers data from SPIxRXSR to SPIxRXB. Automatically cleared in hardware when SPIxBUF is read from, reading SPIxRXB.

Enhanced Buffer Mode:
Indicates RXELM[5:0] = 111111.

Note 1: SPITUR is cleared when SPIEN = 0. When IGNTUR = 1, SPITUR provides dynamic status of the Transmit Underrun condition, but does not stop RX/TX operation and does not need to be cleared by software.

© 2018-2019 Microchip Technology Inc.

REGISTER 16-5: SPIxSTATH: SPIx STATUS REGISTER HIGH

U-0	U-0	HSC/R-0	HSC/R-0	HSC/R-0	HSC/R-0	HSC/R-0	HSC/R-0
—	—	RXELM5(3)	RXELM4(2)	RXELM3(1)	RXELM2	RXELM1	RXELM0
bit 15							bit 8

U-0	U-0	HSC/R-0	HSC/R-0	HSC/R-0	HSC/R-0	HSC/R-0	HSC/R-0
—	—	TXELM5(3)	TXELM4(2)	TXELM3(1)	TXELM2	TXELM1	TXELM0
bit 7							bit 0

Legend:	HSC = Hardware Settable/Clearable bit		
R = Readable bit	W = Writable bit	U = Unimplemented bit, read as ‘0’	
-n = Value at POR	‘1’ = Bit is set	‘0’ = Bit is cleared	x = Bit is unknown

bit 15-14 **Unimplemented:** Read as ‘0’

bit 13-8 **RXELM[5:0]:** Receive Buffer Element Count bits (valid in Enhanced Buffer mode)(1,2,3)

bit 7-6 **Unimplemented:** Read as ‘0’

bit 5-0 **TXELM[5:0]:** Transmit Buffer Element Count bits (valid in Enhanced Buffer mode)(1,2,3)

Note 1: RXELM3 and TXELM3 bits are only present when FIFODEPTH = 8 or higher.

2: RXELM4 and TXELM4 bits are only present when FIFODEPTH = 16 or higher.

3: RXELM5 and TXELM5 bits are only present when FIFODEPTH = 32.

REGISTER 16-6: SPIxIMSKL: SPIx INTERRUPT MASK REGISTER LOW

U-0	U-0	U-0	R/W-0	R/W-0	U-0	U-0	R/W-0
—	—	—	FRMERREN	BUSYEN	—	—	SPITUREN
bit 15							bit 8

R/W-0	R/W-0	R/W-0	U-0	R/W-0	U-0	R/W-0	R/W-0
SRMTEN	SPIROVEN	SPIRBEN	—	SPITBEN	—	SPITBFEN	SPIRBFEN
bit 7							bit 0

Legend:			
R = Readable bit	W = Writable bit	U = Unimplemented bit, read as ‘0’	
-n = Value at POR	‘1’ = Bit is set	‘0’ = Bit is cleared	x = Bit is unknown

bit 15-13 **Unimplemented:** Read as ‘0’

bit 12 **FRMERREN:** Enable Interrupt Events via FRMERR bit
1 = Frame error generates an interrupt event
0 = Frame error does not generate an interrupt event

bit 11 **BUSYEN:** Enable Interrupt Events via SPIBUSY bit
1 = SPIBUSY generates an interrupt event
0 = SPIBUSY does not generate an interrupt event

bit 10-9 **Unimplemented:** Read as ‘0’

bit 8 **SPITUREN:** Enable Interrupt Events via SPITUR bit
1 = Transmit Underrun (TUR) generates an interrupt event
0 = Transmit Underrun does not generate an interrupt event

bit 7 **SRMTEN:** Enable Interrupt Events via SRMT bit
1 = Shift Register Empty (SRMT) generates interrupt events
0 = Shift Register Empty does not generate interrupt events

bit 6 **SPIROVEN:** Enable Interrupt Events via SPIROV bit
1 = SPIx Receive Overflow (ROV) generates an interrupt event
0 = SPIx Receive Overflow does not generate an interrupt event

bit 5 **SPIRBEN:** Enable Interrupt Events via SPIRBE bit
1 = SPIx RX buffer empty generates an interrupt event
0 = SPIx RX buffer empty does not generate an interrupt event

bit 4 **Unimplemented:** Read as ‘0’

bit 3 **SPITBEN:** Enable Interrupt Events via SPITBE bit
1 = SPIx transmit buffer empty generates an interrupt event
0 = SPIx transmit buffer empty does not generate an interrupt event

bit 2 **Unimplemented:** Read as ‘0’

bit 1 **SPITBFEN:** Enable Interrupt Events via SPITBF bit
1 = SPIx transmit buffer full generates an interrupt event
0 = SPIx transmit buffer full does not generate an interrupt event

bit 0 **SPIRBFEN:** Enable Interrupt Events via SPIRBF bit
1 = SPIx receive buffer full generates an interrupt event
0 = SPIx receive buffer full does not generate an interrupt event

© 2018-2019 Microchip Technology Inc.

REGISTER 16-7: SPIxIMSKH: SPIx INTERRUPT MASK REGISTER HIGH

R/W-0	U-0	R/W-0	R/W-0	R/W-0	R/W-0	R/W-0	R/W-0
RXWIEN	—	RXMSK5(1)	RXMSK4(1,4)	RXMSK3(1,3)	RXMSK2(1,2)	RXMSK1(1)	RXMSK0(1)
bit 15							bit 8

R/W-0	U-0	R/W-0	R/W-0	R/W-0	R/W-0	R/W-0	R/W-0
TXWIEN	—	TXMSK5(1)	TXMSK4(1,4)	TXMSK3(1,3)	TXMSK2(1,2)	TXMSK1(1)	TXMSK0(1)
bit 7							bit 0

Legend:			
R = Readable bit	W = Writable bit	U = Unimplemented bit, read as ‘0’	
-n = Value at POR	‘1’ = Bit is set	‘0’ = Bit is cleared	x = Bit is unknown

bit 15 **RXWIEN:** Receive Watermark Interrupt Enable bit
1 = Triggers receive buffer element watermark interrupt when RXMSK[5:0] ≤ RXELM[5:0]
0 = Disables receive buffer element watermark interrupt

bit 14 **Unimplemented:** Read as ‘0’

bit 13-8 **RXMSK[5:0]:** RX Buffer Mask bits(1,2,3,4)
RX mask bits; used in conjunction with the RXWIEN bit.

bit 7 **TXWIEN:** Transmit Watermark Interrupt Enable bit
1 = Triggers transmit buffer element watermark interrupt when TXMSK[5:0] = TXELM[5:0]
0 = Disables transmit buffer element watermark interrupt

bit 6 **Unimplemented:** Read as ‘0’

bit 5-0 **TXMSK[5:0]:** TX Buffer Mask bits(1,2,3,4)
TX mask bits; used in conjunction with the TXWIEN bit.

Note 1: Mask values higher than FIFODEPTH are not valid. The module will not trigger a match for any value in this case.
2: RXMSK2 and TXMSK2 bits are only present when FIFODEPTH = 8 or higher.
3: RXMSK3 and TXMSK3 bits are only present when FIFODEPTH = 16 or higher.
4: RXMSK4 and TXMSK4 bits are only present when FIFODEPTH = 32.

FIGURE 16-3: SPIx MASTER/SLAVE CONNECTION (STANDARD MODE)

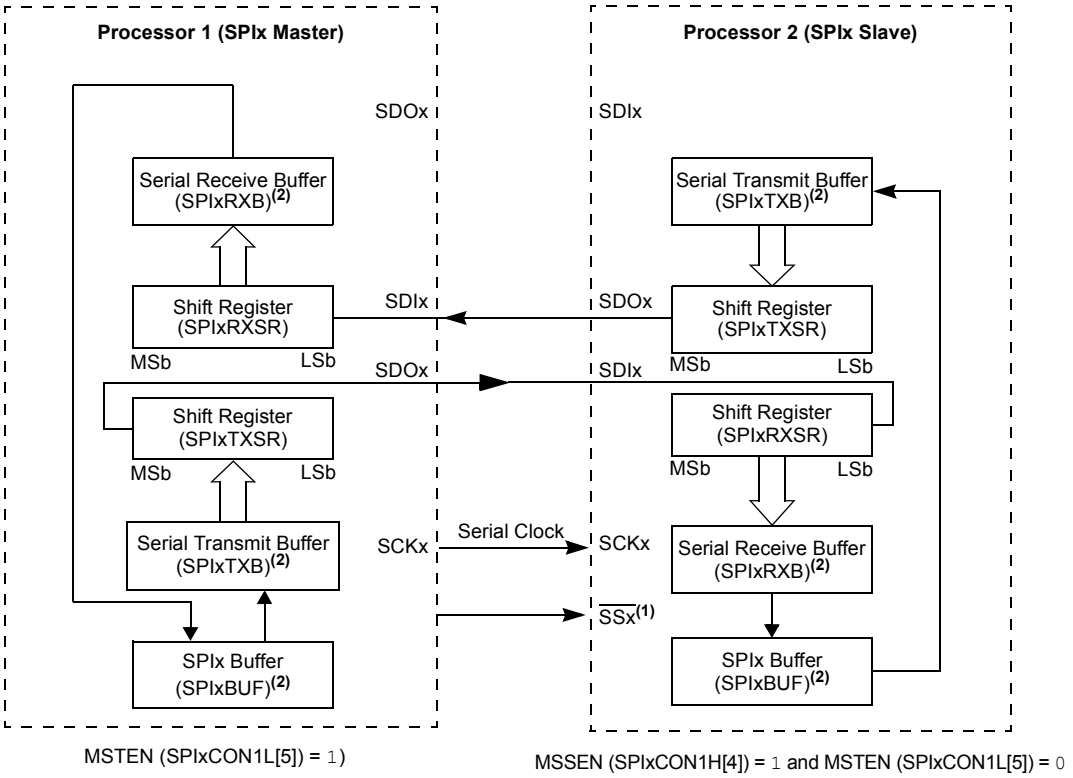

Note 1: Using the $\overline{SSx}$ pin in Slave mode of operation is optional.

2: User must write transmit data to read the received data from SPIxBUF. The SPIxTXB and SPIxRXB registers are memory-mapped to SPIxBUF.

© 2018-2019 Microchip Technology Inc.

FIGURE 16-4: SPIx MASTER/SLAVE CONNECTION (ENHANCED BUFFER MODES)

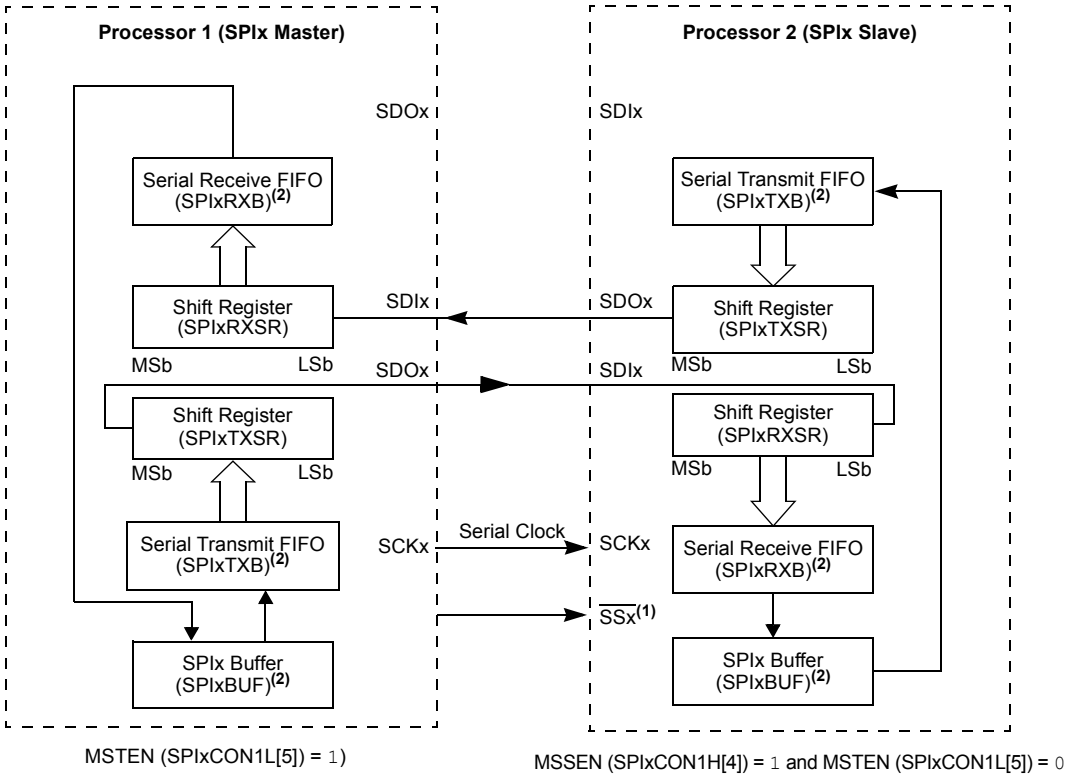

Note 1: Using the $\overline{SSx}$ pin in Slave mode of operation is optional.

2: User must write transmit data to read the received data from SPIxBUF. The SPIxTXB and SPIxRXB registers are memory-mapped to SPIxBUF.

FIGURE 16-5: SPIx MASTER, FRAME MASTER CONNECTION DIAGRAM

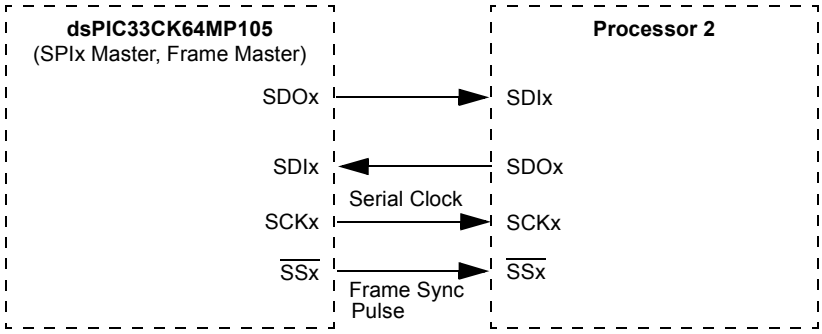

FIGURE 16-6: SPIx MASTER, FRAME SLAVE CONNECTION DIAGRAM

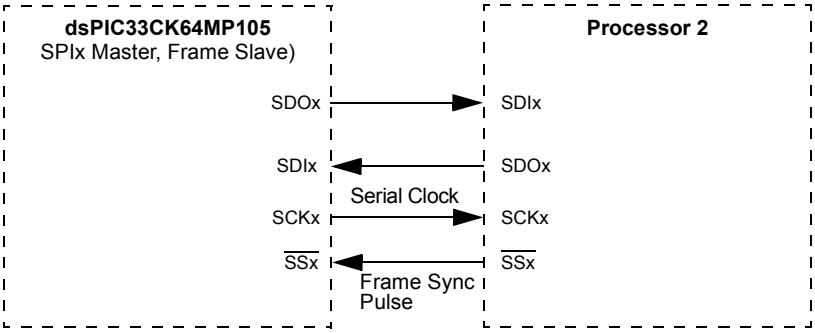

FIGURE 16-7: SPIx SLAVE, FRAME MASTER CONNECTION DIAGRAM

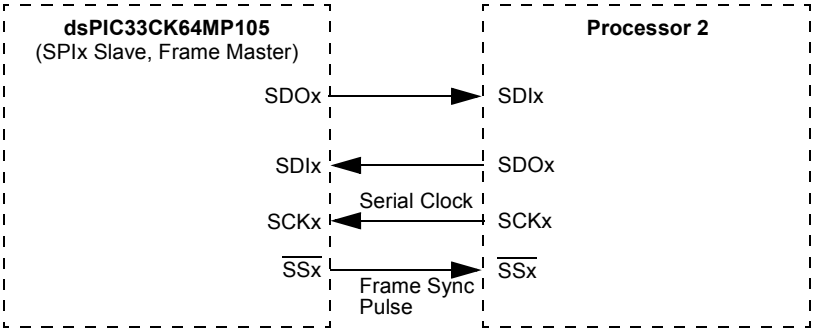

FIGURE 16-8: SPIx SLAVE, FRAME SLAVE CONNECTION DIAGRAM

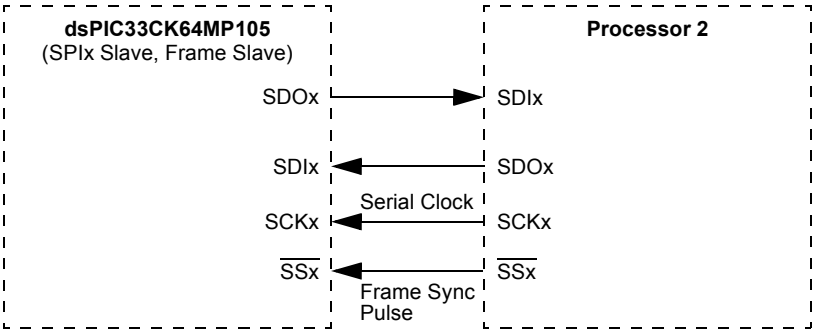

EQUATION 16-1: RELATIONSHIP BETWEEN DEVICE AND SPIx CLOCK SPEED

$$Baud\ Rate = \frac{F_P}{(2 * (SPIxBRG + 1))}$$

Where:

F_P is the Peripheral Bus Clock Frequency.

© 2018-2019 Microchip Technology Inc.

17.0 INTER-INTEGRATED CIRCUIT (I^2C)

Note 1: This data sheet summarizes the features of the dsPIC33CK64MP105 family of devices. It is not intended to be a comprehensive reference source. For more information, refer to **"Inter-Integrated Circuit (I^2C)"** (www.microchip.com/DS70000195) in the *"dsPIC33/PIC24 Family Reference Manual"*.

The Inter-Integrated Circuit (I^2C) module is a serial interface useful for communicating with other peripheral or microcontroller devices. These peripheral devices may be serial EEPROMs, display drivers, A/D Converters, etc.

The I^2C module supports these features:

- Independent Master and Slave Logic
- 7-Bit and 10-Bit Device Addresses
- General Call Address as Defined in the I^2C Protocol
- Clock Stretching to Provide Delays for the Processor to Respond to a Slave Data Request
- Both 100 kHz and 400 kHz Bus Specifications
- Configurable Address Masking
- Multi-Master modes to Prevent Loss of Messages in Arbitration
- Bus Repeater mode, Allowing the Acceptance of All Messages as a Slave, regardless of the Address
- Automatic SCL

A block diagram of the module is shown in Figure 17-1.

17.1 Communicating as a Master in a Single Master Environment

The details of sending a message in Master mode depends on the communication protocol for the device being communicated with. Typically, the sequence of events is as follows:

1. Assert a Start condition on SDAx and SCLx.
2. Send the I^2C device address byte to the Slave with a write indication.
3. Wait for and verify an Acknowledge from the Slave.
4. Send the first data byte (sometimes known as the command) to the Slave.
5. Wait for and verify an Acknowledge from the Slave.
6. Send the serial memory address low byte to the Slave.
7. Repeat Steps 4 and 5 until all data bytes are sent.
8. Assert a Repeated Start condition on SDAx and SCLx.
9. Send the device address byte to the Slave with a read indication.
10. Wait for and verify an Acknowledge from the Slave.
11. Enable Master reception to receive serial memory data.
12. Generate an ACK or NACK condition at the end of a received byte of data.
13. Generate a Stop condition on SDAx and SCLx.

FIGURE 17-1: I2Cx BLOCK DIAGRAM

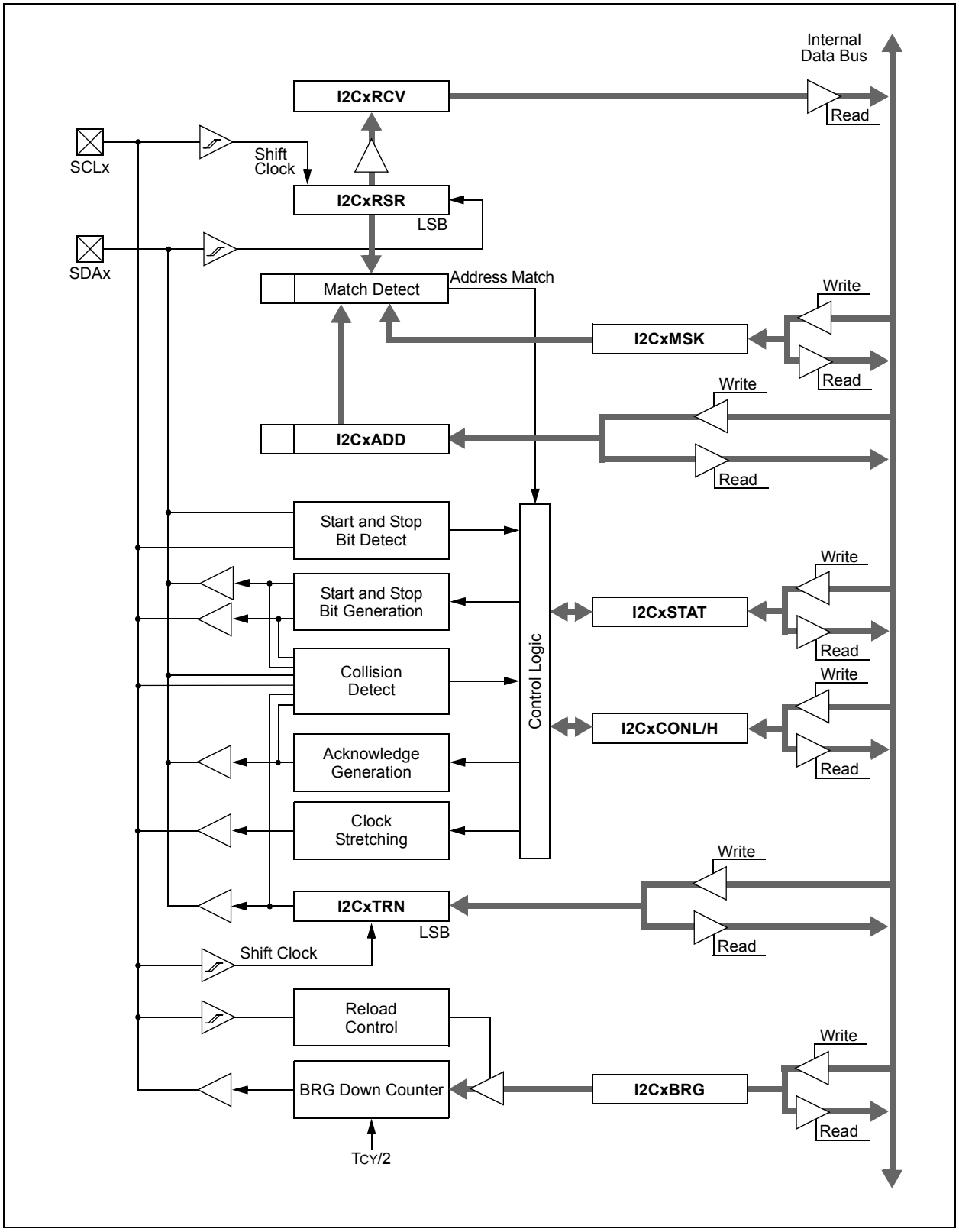

© 2018-2019 Microchip Technology Inc.

17.2 Setting Baud Rate When Operating as a Bus Master

To compute the Baud Rate Generator reload value, use Equation 17-1.

EQUATION 17-1: COMPUTING BAUD RATE RELOAD VALUE(1,2,3,4)

$$I2CxBRG = ((1/F_{SCL} - Delay) \bullet F_P/2) - 2$$

Note 1: Based on $F_P = F_{OSC}/2$.

2: These clock rate values are for guidance only. The actual clock rate can be affected by various system-level parameters. The actual clock rate should be measured in its intended application.

3: Typical value of delay varies from 110 ns to 150 ns.

4: I2CxBRG values of 0 to 3 are expressly forbidden. The user should never program the I2CxBRG with a value of 0x0, 0x1, 0x2 or 0x3 as indeterminate results may occur.

17.3 Slave Address Masking

The I2CxMSK register (Register 17-4) designates address bit positions as “don’t care” for both 7-Bit and 10-Bit Addressing modes. Setting a particular bit location (= `1`) in the I2CxMSK register causes the Slave module to respond, whether the corresponding address bit value is a ‘`0`’ or a ‘`1`’. For example, when I2CxMSK is set to ‘`0010000000`’, the Slave module will detect both addresses, ‘`0000000000`’ and ‘`0010000000`’.

To enable address masking, the Intelligent Peripheral Management Interface (IPMI) must be disabled by clearing the STRICT bit (I2CxCONL[11]).

Note: As a result of changes in the I^{2}C protocol, the addresses in Table 17-2 are reserved and will not be Acknowledged in Slave mode. This includes any address mask settings that include any of these addresses.

TABLE 17-1: I2Cx CLOCK RATES(1,2)

FCY	FSCL	I2CxBRG Value	
		Decimal	Hexadecimal
100 MHz	1 MHz	41	29
100 MHz	400 kHz	116	74
100 MHz	100 kHz	491	1EB
80 MHz	1 MHz	32	20
80 MHz	400 kHz	92	5C
80 MHz	100 kHz	392	188
60 MHz	1 MHz	24	18
60 MHz	400 kHz	69	45
60 MHz	100 kHz	294	126
40 MHz	1 MHz	15	0F
40 MHz	400 kHz	45	2D
40 MHz	100 kHz	195	C3
20 MHz	1 MHz	7	7
20 MHz	400 kHz	22	16
20 MHz	100 kHz	97	61

Note 1: Based on $F_P = F_{OSC}/2$.

2: These clock rate values are for guidance only. The actual clock rate can be affected by various system-level parameters. The actual clock rate should be measured in its intended application.

TABLE 17-2: I2Cx RESERVED ADDRESSES[1]

Slave Address	R/$\overline{W}$ Bit	Description
0000 000	0	General Call Address[2]
0000 000	1	Start Byte
0000 001	x	Cbus Address
0000 01x	x	Reserved
0000 1xx	x	HS Mode Master Code
1111 0xx	x	10-Bit Slave Upper Byte[3]
1111 1xx	x	Reserved

Note 1: The address bits listed here will never cause an address match independent of address mask settings.

2: This address will be Acknowledged only if GCEN = 1.

3: A match on this address can only occur on the upper byte in 10-Bit Addressing mode.

© 2018-2019 Microchip Technology Inc.

17.4 I²C Control/Status Registers

REGISTER 17-1: I2CxCONL: I2Cx CONTROL REGISTER LOW

R/W-0	U-0	HC/R/W-0	R/W-1	R/W-0	R/W-0	R/W-0	R/W-0
I2CEN	—	I2CSIDL	SCLREL(1)	STRICT	A10M	DISSLW	SMEN(3)
bit 15							bit 8

R/W-0	R/W-0	R/W-0	HC/R/W-0	HC/R/W-0	HC/R/W-0	HC/R/W-0	HC/R/W-0
GCEN	STREN	ACKDT	ACKEN	RCEN	PEN	RSEN	SEN
bit 7							bit 0

Legend:	HC = Hardware Clearable bit		
R = Readable bit	W = Writable bit	U = Unimplemented bit, read as ‘0’	
-n = Value at POR	‘1’ = Bit is set	‘0’ = Bit is cleared	x = Bit is unknown

bit 15 **I2CEN:** I2Cx Enable bit (writable from software only)
1 = Enables the I2Cx module, and configures the SDAx and SCLx pins as serial port pins
0 = Disables the I2Cx module; all I²C pins are controlled by port functions

bit 14 **Unimplemented:** Read as ‘0’

bit 13 **I2CSIDL:** I2Cx Stop in Idle Mode bit
1 = Discontinues module operation when device enters Idle mode
0 = Continues module operation in Idle mode

bit 12 **SCLREL:** SCLx Release Control bit (I²C Slave mode only)(1)
1 = Releases the SCLx clock
0 = Holds the SCLx clock low (clock stretch)
If STREN = 1:(2)
User software may write ‘0’ to initiate a clock stretch and write ‘1’ to release the clock. Hardware clears at the beginning of every Slave data byte transmission. Hardware clears at the end of every Slave address byte reception. Hardware clears at the end of every Slave data byte reception.
If STREN = 0:
User software may only write ‘1’ to release the clock. Hardware clears at the beginning of every Slave data byte transmission. Hardware clears at the end of every Slave address byte reception.

bit 11 **STRICT:** I2Cx Strict Reserved Address Rule Enable bit
1 = Strict reserved addressing is enforced; for reserved addresses, refer to Table 17-2.
(In Slave Mode) – The device doesn’t respond to reserved address space and addresses falling in that category are NACKed.
(In Master Mode) – The device is allowed to generate addresses with reserved address space.
0 = Reserved addressing would be Acknowledged.
(In Slave Mode) – The device will respond to an address falling in the reserved address space. When there is a match with any of the reserved addresses, the device will generate an ACK.
(In Master Mode) – Reserved.

bit 10 **A10M:** 10-Bit Slave Address Flag bit
1 = I2CxADD is a 10-bit Slave address
0 = I2CxADD is a 7-bit Slave address

Note 1: Automatically cleared to ‘0’ at the beginning of Slave transmission; automatically cleared to ‘0’ at the end of Slave reception.
2: Automatically cleared to ‘0’ at the beginning of Slave transmission.
3: The SMB3EN Configuration bit (FDEVOPT[10]) selects between normal and SMBus 3.0 levels.

REGISTER 17-1: I2CxCONL: I2Cx CONTROL REGISTER LOW (CONTINUED)

bit 9 **DISSLW:** Slew Rate Control Disable bit
1 = Slew rate control is disabled for Standard Speed mode (100 kHz, also disabled for 1 MHz mode)
0 = Slew rate control is enabled for High-Speed mode (400 kHz)

bit 8 **SMEN:** SMBus Input Levels Enable bit(3)
1 = Enables input logic so thresholds are compliant with the SMBus specification
0 = Disables SMBus-specific inputs

bit 7 **GCEN:** General Call Enable bit (I^2C Slave mode only)
1 = Enables interrupt when a general call address is received in I2CxRSR; module is enabled for reception
0 = General call address is disabled.

bit 6 **STREN:** SCLx Clock Stretch Enable bit
In I^2C Slave mode only; used in conjunction with the SCLREL bit.
1 = Enables clock stretching
0 = Disables clock stretching

bit 5 **ACKDT:** Acknowledge Data bit
In I^2C Master mode during Master Receive mode. The value that will be transmitted when the user initiates an Acknowledge sequence at the end of a receive.
In I^2C Slave mode when AHEN = 1 or DHEN = 1. The value that the Slave will transmit when it initiates an Acknowledge sequence at the end of an address or data reception.
1 = NACK is sent
0 = ACK is sent

bit 4 **ACKEN:** Acknowledge Sequence Enable bit
In I^2C Master mode only; applicable during Master Receive mode.
1 = Initiates Acknowledge sequence on SDAx and SCLx pins, and transmits ACKDT data bit
0 = Acknowledge sequence is Idle

bit 3 **RCEN:** Receive Enable bit (I^2C Master mode only)
1 = Enables Receive mode for I^2C; automatically cleared by hardware at end of 8-bit receive data byte
0 = Receive sequence is not in progress

bit 2 **PEN:** Stop Condition Enable bit (I^2C Master mode only)
1 = Initiates Stop condition on SDAx and SCLx pins
0 = Stop condition is Idle

bit 1 **RSEN:** Restart Condition Enable bit (I^2C Master mode only)
1 = Initiates Restart condition on SDAx and SCLx pins
0 = Restart condition is Idle

bit 0 **SEN:** Start Condition Enable bit (I^2C Master mode only)
1 = Initiates Start condition on SDAx and SCLx pins
0 = Start condition is Idle

Note 1: Automatically cleared to '0' at the beginning of Slave transmission; automatically cleared to '0' at the end of Slave reception.
2: Automatically cleared to '0' at the beginning of Slave transmission.
3: The SMB3EN Configuration bit (FDEVOPT[10]) selects between normal and SMBus 3.0 levels.

© 2018-2019 Microchip Technology Inc.

REGISTER 17-2: I2CxCONH: I2Cx CONTROL REGISTER HIGH

U-0	U-0	U-0	U-0	U-0	U-0	U-0	U-0
—	—	—	—	—	—	—	—
bit 15							bit 8

U-0	R/W-0	R/W-0	R/W-0	R/W-0	U-0	R/W-0	R/W-0
—	PCIE	SCIE	BOEN	SDAHT	—	AHEN	DHEN
bit 7							bit 0

Legend:			
R = Readable bit	W = Writable bit	U = Unimplemented bit, read as ‘0’	
-n = Value at POR	‘1’ = Bit is set	‘0’ = Bit is cleared	x = Bit is unknown

bit 15-7 **Unimplemented:** Read as ‘0’

bit 6 **PCIE:** Stop Condition Interrupt Enable bit (I^2C Slave mode only).
1 = Enables interrupt on detection of Stop condition
0 = Stop detection interrupts are disabled

bit 5 **SCIE:** Start Condition Interrupt Enable bit (I^2C Slave mode only)
1 = Enables interrupt on detection of Start or Restart conditions
0 = Start detection interrupts are disabled

bit 4 **BOEN:** Buffer Overwrite Enable bit (I^2C Slave mode only)
1 = I2CxRCV is updated and an ACK is generated for a received address/data byte, ignoring the state of the I2COV bit only if RBF bit = 0
0 = I2CxRCV is only updated when I2COV is clear

bit 3 **SDAHT:** SDAx Hold Time Selection bit
1 = Minimum of 300 ns hold time on SDAx after the falling edge of SCLx
0 = Minimum of 100 ns hold time on SDAx after the falling edge of SCLx

bit 2 **Unimplemented:** Read as ‘0’

bit 1 **AHEN:** Address Hold Enable bit (I^2C Slave mode only)
1 = Following the 8th falling edge of SCLx for a matching received address byte; SCLREL bit (I2CxCONL[12]) will be cleared and the SCLx will be held low
0 = Address holding is disabled

bit 0 **DHEN:** Data Hold Enable bit (I^2C Slave mode only)
1 = Following the 8th falling edge of SCLx for a received data byte; Slave hardware clears the SCLREL bit (I2CxCONL[12]) and SCLx is held low
0 = Data holding is disabled

REGISTER 17-3: I2CxSTAT: I2Cx STATUS REGISTER

HSC/R-0	HSC/R-0	HSC/R-0	U-0	U-0	HSC/R/C-0	HSC/R-0	HSC/R-0
ACKSTAT	TRSTAT	ACKTIM	—	—	BCL	GCSTAT	ADD10
bit 15							bit 8

HS/R/C-0	HS/R/C-0	HSC/R-0	HSC/R-0	HSC/R-0	HSC/R-0	HSC/R-0	HSC/R-0
IWCOL	I2COV	D/$\overline{A}$	P	S	R/$\overline{W}$	RBF	TBF
bit 7							bit 0

Legend:	C = Clearable bit	HSC = Hardware Settable/Clearable bit	
R = Readable bit	W = Writable bit	U = Unimplemented bit, read as ‘0’	
-n = Value at POR	‘1’ = Bit is set	‘0’ = Bit is cleared	HS = Hardware Settable bit

bit 15 **ACKSTAT:** Acknowledge Status bit (updated in all Master and Slave modes)
1 = Acknowledge was not received from Slave
0 = Acknowledge was received from Slave

bit 14 **TRSTAT:** Transmit Status bit (when operating as I^2C Master; applicable to Master transmit operation)
1 = Master transmit is in progress (eight bits + ACK)
0 = Master transmit is not in progress

bit 13 **ACKTIM:** Acknowledge Time Status bit (valid in I^2C Slave mode only)
1 = Indicates I^2C bus is in an Acknowledge sequence, set on 8th falling edge of SCLx clock
0 = Not an Acknowledge sequence, cleared on 9th rising edge of SCLx clock

bit 12-11 **Unimplemented:** Read as ‘0’

bit 10 **BCL:** Bus Collision Detect bit (cleared when I^2C module is disabled, I2CEN = 0)
1 = A bus collision has been detected during a transmit operation
0 = No bus collision has been detected

bit 9 **GCSTAT:** General Call Status bit (cleared after Stop detection)
1 = General call address was received
0 = General call address was not received

bit 8 **ADD10:** 10-Bit Address Status bit (cleared after Stop detection)
1 = 10-bit address was matched
0 = 10-bit address was not matched

bit 7 **IWCOL:** I2Cx Write Collision Detect bit
1 = An attempt to write to the I2CxTRN register failed because the I^2C module is busy; must be cleared in software
0 = No collision

bit 6 **I2COV:** I2Cx Receive Overflow Flag bit
1 = A byte was received while the I2CxRCV register is still holding the previous byte; I2COV is a “don’t care” in Transmit mode, must be cleared in software
0 = No overflow

bit 5 **D/$\overline{A}$:** Data/$\overline{\text{Address}}$ bit (when operating as I^2C Slave)
1 = Indicates that the last byte received was data
0 = Indicates that the last byte received or transmitted was an address

bit 4 **P:** I2Cx Stop bit
Updated when Start, Reset or Stop is detected; cleared when the I^2C module is disabled, I2CEN = 0.
1 = Indicates that a Stop bit has been detected last
0 = Stop bit was not detected last

© 2018-2019 Microchip Technology Inc.

REGISTER 17-3: I2CxSTAT: I2Cx STATUS REGISTER (CONTINUED)

bit 3 **S:** I2Cx Start bit
Updated when Start, Reset or Stop is detected; cleared when the I^2C module is disabled, I2CEN = 0.
1 = Indicates that a Start (or Repeated Start) bit has been detected last
0 = Start bit was not detected last

bit 2 **R/$\overline{W}$:** Read/$\overline{Write}$ Information bit (when operating as I^2C Slave)
1 = Read: Indicates the data transfer is output from the Slave
0 = Write: Indicates the data transfer is input to the Slave

bit 1 **RBF:** Receive Buffer Full Status bit
1 = Receive is complete, I2CxRCV is full
0 = Receive is not complete, I2CxRCV is empty

bit 0 **TBF:** Transmit Buffer Full Status bit
1 = Transmit is in progress, I2CxTRN is full (eight bits of data)
0 = Transmit is complete, I2CxTRN is empty

REGISTER 17-4: I2CxMSK: I2Cx SLAVE MODE ADDRESS MASK REGISTER

U-0	U-0	U-0	U-0	U-0	U-0	R/W-0	R/W-0
—	—	—	—	—	—	MSK[9:8]	
bit 15							bit 8

R/W-0	R/W-0	R/W-0	R/W-0	R/W-0	R/W-0	R/W-0	R/W-0
MSK[7:0]							
bit 7							bit 0

Legend:			
R = Readable bit	W = Writable bit	U = Unimplemented bit, read as ‘0’	
-n = Value at POR	‘1’ = Bit is set	‘0’ = Bit is cleared	x = Bit is unknown

bit 15-10 **Unimplemented:** Read as ‘0’

bit 9-0 **MSK[9:0]:** I2Cx Mask for Address Bit x Select bits
1 = Enables masking for bit x of the incoming message address; bit match is not required in this position
0 = Disables masking for bit x; bit match is required in this position

NOTES:

© 2018-2019 Microchip Technology Inc.

18.0 SINGLE-EDGE NIBBLE TRANSMISSION (SENT)

Note 1: This data sheet summarizes the features of this group of dsPIC33CK64MP105 family devices. It is not intended to be a comprehensive reference source. To complement the information in this data sheet, refer to **"Single-Edge Nibble Transmission (SENT) Module"** (www.microchip.com/DS70005145) in the *"dsPIC33/PIC24 Family Reference Manual"*.

The Single-Edge Nibble Transmission (SENT) module is based on the SAE J2716, *"SENT – Single-Edge Nibble Transmission for Automotive Applications"*. The SENT protocol is a one-way, single wire time modulated serial communication, based on successive falling edges. It is intended for use in applications where high-resolution sensor data needs to be communicated from a sensor to an Engine Control Unit (ECU).

The SENTx module has the following major features:

- Selectable Transmit or Receive mode
- Synchronous or Asynchronous Transmit modes
- Automatic Data Rate Synchronization
- Optional Automatic Detection of CRC Errors in Receive mode
- Optional Hardware Calculation of CRC in Transmit mode
- Support for Optional Pause Pulse Period
- Data Buffering for One Message Frame
- Selectable Data Length for Transmit/Receive from Three to Six Nibbles
- Automatic Detection of Framing Errors

SENT protocol timing is based on a predetermined time unit, TTICK. Both the transmitter and receiver must be preconfigured for TTICK, which can vary from 3 to 90 µs.

A SENT message frame starts with a Sync pulse. The purpose of the Sync pulse is to allow the receiver to calculate the data rate of the message encoded by the transmitter. The SENT specification allows messages to be validated with up to a 20% variation in TTICK. This allows for the transmitter and receiver to run from different clocks that may be inaccurate, and drift with time and temperature. The data nibbles are 4 bits in length and are encoded as the data value + 12 ticks. This yields a 0 value of 12 ticks and the maximum value, 0xF, of 27 ticks.

A SENT message consists of the following:

- A synchronization/calibration period of 56 tick times
- A status nibble of 12-27 tick times
- Up to six data nibbles of 12-27 tick times
- A CRC nibble of 12-27 tick times
- An optional pause pulse period of 12-768 tick times

Figure 18-1 shows a block diagram of the SENTx module.

Figure 18-2 shows the construction of a typical 6-nibble data frame, with the numbers representing the minimum or maximum number of tick times for each section.

FIGURE 18-1: SENTx MODULE BLOCK DIAGRAM

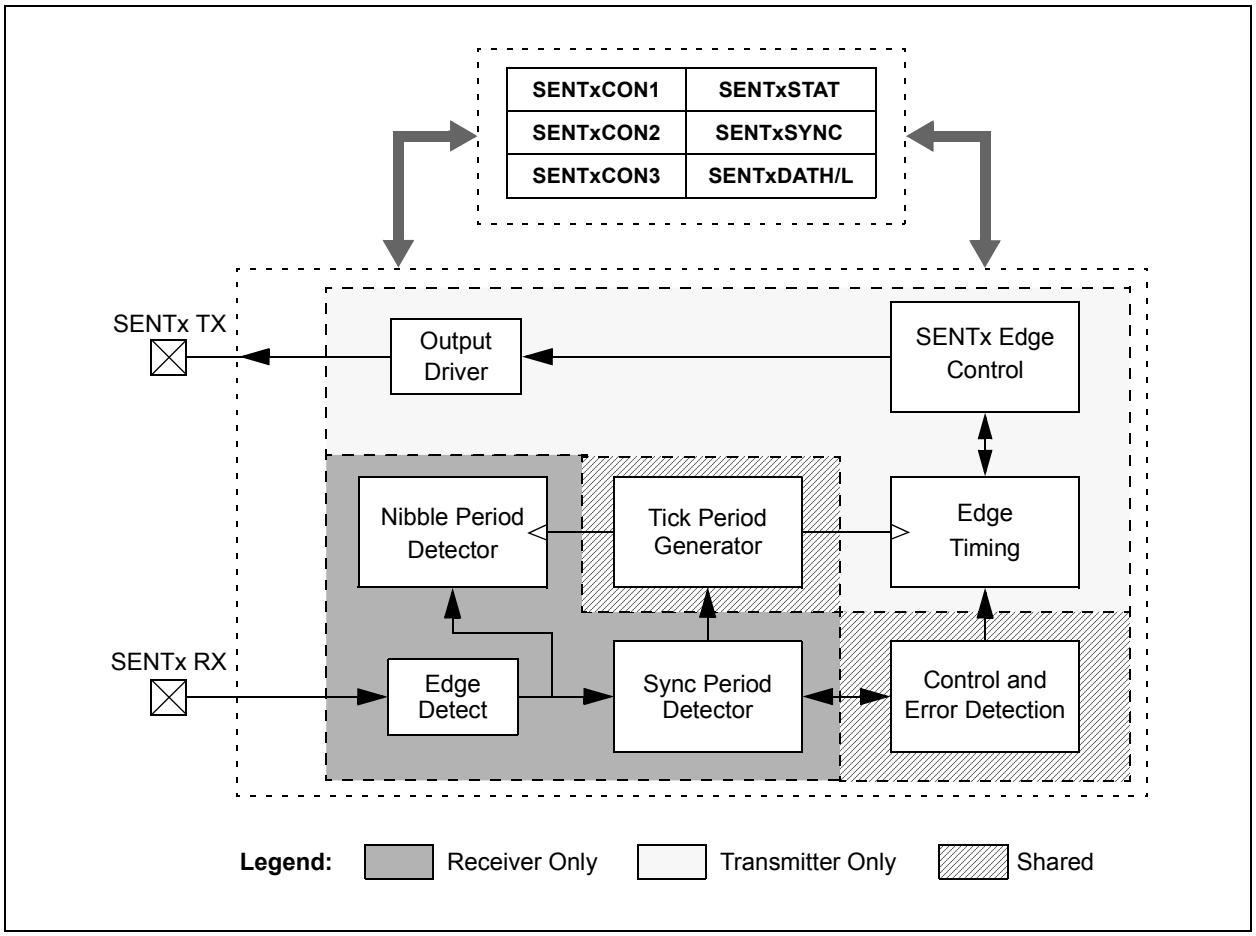

FIGURE 18-2: SENTx PROTOCOL DATA FRAMES

© 2018-2019 Microchip Technology Inc.

18.1 Transmit Mode

By default, the SENTx module is configured for transmit operation. The module can be configured for continuous asynchronous message frame transmission, or alternatively, for Synchronous mode triggered by software. When enabled, the transmitter will send a Sync, followed by the appropriate number of data nibbles, an optional CRC and optional pause pulse. The tick period used by the SENTx transmitter is set by writing a value to the TICKTIME[15:0] (SENTxCON2[15:0]) bits. The tick period calculations are shown in Equation 18-1.

EQUATION 18-1: TICK PERIOD CALCULATION

$$TICKTIME[15:0] = \frac{T_{TICK}}{T_{CLK}} - 1$$

An optional pause pulse can be used in Asynchronous mode to provide a fixed message frame time period. The frame period used by the SENTx transmitter is set by writing a value to the FRAMETIME[15:0] (SENTxCON3[15:0]) bits. The formulas used to calculate the value of frame time are shown in Equation 18-2.

EQUATION 18-2: FRAME TIME CALCULATIONS

$$FRAMETIME[15:0] = T_{TICK}/T_{FRAME}$$

$$FRAMETIME[15:0] \geq 122 + 27N$$

$$FRAMETIME[15:0] \geq 848 + 12N$$

Where:

T_{FRAME} = Total time of the message from ms

N = The number of data nibbles in message, 1-6

Note: The module will not produce a pause period with less than 12 ticks, regardless of the FRAMETIME[15:0] value. FRAMETIME[15:0] values beyond 2047 will have no effect on the length of a data frame.

18.1.1 TRANSMIT MODE CONFIGURATION

18.1.1.1 Initializing the SENTx Module

Perform the following steps to initialize the module:

1. Write RCVEN (SENTxCON1[11]) = `0` for Transmit mode.
2. Write TXM (SENTxCON1[10]) = `0` for Asynchronous Transmit mode or TXM = `1` for Synchronous mode.
3. Write NIBCNT[2:0] (SENTxCON1[2:0]) for the desired data frame length.
4. Write CRCEN (SENTxCON1[8]) for hardware or software CRC calculation.
5. Write PPP (SENTxCON1[7]) for optional pause pulse.
6. If PPP = `1`, write T_{FRAME} to SENTxCON3.
7. Write SENTxCON2 with the appropriate value for the desired tick period.
8. Enable interrupts and set interrupt priority.
9. Write initial status and data values to SENTxDATH/L.
10. If CRCEN = `0`, calculate CRC and write the value to CRC[3:0] (SENTxDATL[3:0]).
11. Set the SNTEN (SENTxCON1[15]) bit to enable the module.

User software updates to SENTxDATH/L must be performed after the completion of the CRC and before the next message frame's status nibble. The recommended method is to use the message frame completion interrupt to trigger data writes.

18.2 Receive Mode

The module can be configured for receive operation by setting the RCVEN (SENTxCON1[11]) bit. The time between each falling edge is compared to SYNCMIN[15:0] (SENTxCON3[15:0]) and SYNCMAX[15:0] (SENTxCON2[15:0]), and if the measured time lies between the minimum and maximum limits, the module begins to receive data. The validated Sync time is captured in the SENTxSYNC register and the tick time is calculated. Subsequent falling edges are verified to be within the valid data width and the data is stored in the SENTxDATL/H registers. An interrupt event is generated at the completion of the message and the user software should read the SENTx Data registers before the reception of the next nibble. The equation for SYNCMIN[15:0] and SYNCMAX[15:0] is shown in Equation 18-3.

EQUATION 18-3: SYNCMIN[15:0] AND SYNCMAX[15:0] CALCULATIONS

$$T_{TICK} = T_{CLK} \bullet (TICKTIME[15:0] + 1)$$

$$FRAMETIME[15:0] = T_{TICK}/T_{FRAME}$$

$$SyncCount = 8 \text{ x } F_{RCV} \text{ x } T_{TICK}$$

$$SYNCMIN[15:0] = 0.8 \text{ x } SyncCount$$

$$SYNCMAX[15:0] = 1.2 \text{ x } SyncCount$$

$$FRAMETIME[15:0] \geq 122 + 27N$$

$$FRAMETIME[15:0] \geq 848 + 12N$$

Where:

T_{FRAME} = Total time of the message from ms

N = The number of data nibbles in message, 1-6

F_{RCV} = F_{CY} x Prescaler

T_{CLK} = F_{CY}/Prescaler

For T_{TICK} = 3.0 µs and F_{CLK} = 4 MHz, SYNCMIN[15:0] = 76.

Note: To ensure a Sync period can be identified, the value written to SYNCMIN[15:0] must be less than the value written to SYNCMAX[15:0].

18.2.1 RECEIVE MODE CONFIGURATION

18.2.1.1 Initializing the SENTx Module

Perform the following steps to initialize the module:

1. Write RCVEN (SENTxCON1[11]) = `1` for Receive mode.
2. Write NIBCNT[2:0] (SENTxCON1[2:0]) for the desired data frame length.
3. Write CRCEN (SENTxCON1[8]) for hardware or software CRC validation.
4. Write PPP (SENTxCON1[7]) = `1` if pause pulse is present.
5. Write SENTxCON2 with the value of SYNCMAXx (Nominal Sync Period + 20%).
6. Write SENTxCON3 with the value of SYNCMINx (Nominal Sync Period – 20%).
7. Enable interrupts and set interrupt priority.
8. Set the SNTEN (SENTxCON1[15]) bit to enable the module.

The data should be read from the SENTxDATL/H registers after the completion of the CRC and before the next message frame's status nibble. The recommended method is to use the message frame completion interrupt trigger.

© 2018-2019 Microchip Technology Inc.

18.3 SENT Control/Status Registers

REGISTER 18-1: SENTxCON1: SENTx CONTROL REGISTER 1

R/W-0	U-0	R/W-0	U-0	R/W-0	R/W-0	R/W-0	R/W-0
SNTEN	—	SNTSIDL	—	RCVEN	TXM(1)	TXPOL(1)	CRCEN
bit 15							bit 8

R/W-0	R/W-0	U-0	R/W-0	U-0	R/W-0	R/W-0	R/W-0
PPP	SPCEN(2)	—	PS	—	NIBCNT2	NIBCNT1	NIBCNT0
bit 7							bit 0

Legend:			
R = Readable bit	W = Writable bit	U = Unimplemented bit, read as ‘0’	
-n = Value at POR	‘1’ = Bit is set	‘0’ = Bit is cleared	x = Bit is unknown

bit 15 **SNTEN:** SENTx Enable bit
1 = SENTx is enabled
0 = SENTx is disabled

bit 14 **Unimplemented:** Read as ‘0’

bit 13 **SNTSIDL:** SENTx Stop in Idle Mode bit
1 = Discontinues module operation when the device enters Idle mode
0 = Continues module operation in Idle mode

bit 12 **Unimplemented:** Read as ‘0’

bit 11 **RCVEN:** SENTx Receive Enable bit
1 = SENTx operates as a receiver
0 = SENTx operates as a transmitter (sensor)

bit 10 **TXM:** SENTx Transmit Mode bit(1)
1 = SENTx transmits data frame only when triggered using the SYNCTXEN status bit
0 = SENTx transmits data frames continuously while SNTEN = 1

bit 9 **TXPOL:** SENTx Transmit Polarity bit(1)
1 = SENTx data output pin is low in the Idle state
0 = SENTx data output pin is high in the Idle state

bit 8 **CRCEN:** CRC Enable bit
Module in Receive Mode (RCVEN = 1):
1 = SENTx performs CRC verification on received data using the preferred J2716 method
0 = SENTx does not perform CRC verification on received data
Module in Transmit Mode (RCVEN = 1):
1 = SENTx automatically calculates CRC using the preferred J2716 method
0 = SENTx does not calculate CRC

bit 7 **PPP:** Pause Pulse Present bit
1 = SENTx is configured to transmit/receive SENT messages with pause pulse
0 = SENTx is configured to transmit/receive SENT messages without pause pulse

bit 6 **SPCEN:** Short PWM Code Enable bit(2)
1 = SPC control from external source is enabled
0 = SPC control from external source is disabled

bit 5 **Unimplemented:** Read as ‘0’

Note 1: This bit has no function in Receive mode (RCVEN = 1).
2: This bit has no function in Transmit mode (RCVEN = 0).

REGISTER 18-1: SENTxCON1: SENTx CONTROL REGISTER 1 (CONTINUED)

bit 4 **PS:** SENTx Module Clock Prescaler (divider) bits
1 = Divide-by-4
0 = Divide-by-1

bit 3 **Unimplemented:** Read as '0'

bit 2-0 **NIBCNT[2:0]:** Nibble Count Control bits
111 = Reserved; do not use
110 = Module transmits/receives six data nibbles in a SENT data pocket
101 = Module transmits/receives five data nibbles in a SENT data pocket
100 = Module transmits/receives four data nibbles in a SENT data pocket
011 = Module transmits/receives three data nibbles in a SENT data pocket
010 = Module transmits/receives two data nibbles in a SENT data pocket
001 = Module transmits/receives one data nibble in a SENT data pocket
000 = Reserved; do not use

Note 1: This bit has no function in Receive mode (RCVEN = 1).
2: This bit has no function in Transmit mode (RCVEN = 0).

© 2018-2019 Microchip Technology Inc.

REGISTER 18-2: SENTxSTAT: SENTx STATUS REGISTER

U-0	U-0	U-0	U-0	U-0	U-0	U-0	U-0
—	—	—	—	—	—	—	—
bit 15							bit 8

R-0	R-0	R-0	R-0	R/C-0	R/C-0	R-0	HC/R/W-0
PAUSE	NIB2	NIB1	NIB0	CRCERR	FRMERR	RXIDLE	SYNCTXEN(1)
bit 7							bit 0

Legend:	C = Clearable bit	HC = Hardware Clearable bit	
R = Readable bit	W = Writable bit	U = Unimplemented bit, read as ‘0’	
-n = Value at POR	‘1’ = Bit is set	‘0’ = Bit is cleared	x = Bit is unknown

bit 15-8 **Unimplemented:** Read as ‘0’

bit 7 **PAUSE:** Pause Period Status bit
1 = The module is transmitting/receiving a pause period
0 = The module is not transmitting/receiving a pause period

bit 6-4 **NIB[2:0]:** Nibble Status bits
Module in Transmit Mode (RCVEN = 0):
111 = Module is transmitting a CRC nibble
110 = Module is transmitting Data Nibble 6
101 = Module is transmitting Data Nibble 5
100 = Module is transmitting Data Nibble 4
011 = Module is transmitting Data Nibble 3
010 = Module is transmitting Data Nibble 2
001 = Module is transmitting Data Nibble 1
000 = Module is transmitting a status nibble or pause period, or is not transmitting
Module in Receive Mode (RCVEN = 1):
111 = Module is receiving a CRC nibble or was receiving this nibble when an error occurred
110 = Module is receiving Data Nibble 6 or was receiving this nibble when an error occurred
101 = Module is receiving Data Nibble 5 or was receiving this nibble when an error occurred
100 = Module is receiving Data Nibble 4 or was receiving this nibble when an error occurred
011 = Module is receiving Data Nibble 3 or was receiving this nibble when an error occurred
010 = Module is receiving Data Nibble 2 or was receiving this nibble when an error occurred
001 = Module is receiving Data Nibble 1 or was receiving this nibble when an error occurred
000 = Module is receiving a status nibble or waiting for Sync

bit 3 **CRCERR:** CRC Status bit (Receive mode only)
1 = A CRC error has occurred for the 1-6 data nibbles in SENTxDATL/H
0 = A CRC error has not occurred

bit 2 **FRMERR:** Framing Error Status bit (Receive mode only)
1 = A data nibble was received with less than 12 tick periods or greater than 27 tick periods
0 = Framing error has not occurred

bit 1 **RXIDLE:** SENTx Receiver Idle Status bit (Receive mode only)
1 = The SENTx data bus has been Idle (high) for a period of SYNCMAX[15:0] or greater
0 = The SENTx data bus is not Idle

Note 1: In Receive mode (RCVEN = 1), the SYNCTXEN bit is read-only.

REGISTER 18-2: SENTxSTAT: SENTx STATUS REGISTER (CONTINUED)

bit 0 **SYNCTXEN:** SENTx Synchronization Period Status/Transmit Enable bit[1]

Module in Receive Mode (RCVEN = 1):

1 = A valid synchronization period was detected; the module is receiving nibble data

0 = No synchronization period has been detected; the module is not receiving nibble data

Module in Asynchronous Transmit Mode (RCVEN = 0, TXM = 0):

The bit always reads as '1' when the module is enabled, indicating the module transmits SENTx data frames continuously. The bit reads '0' when the module is disabled.

Module in Synchronous Transmit Mode (RCVEN = 0, TXM = 1):

1 = The module is transmitting a SENTx data frame

0 = The module is not transmitting a data frame, user software may set SYNCTXEN to start another data frame transmission

Note 1: In Receive mode (RCVEN = 1), the SYNCTXEN bit is read-only.

© 2018-2019 Microchip Technology Inc.

REGISTER 18-3: SENTxDATL: SENTx RECEIVE DATA REGISTER LOW(1)

R/W-0	R/W-0	R/W-0	R/W-0	R/W-0	R/W-0	R/W-0	R/W-0
DATA4[3:0]				DATA5[3:0]			
bit 15							bit 8

R/W-0	R/W-0	R/W-0	R/W-0	R/W-0	R/W-0	R/W-0	R/W-0
DATA6[3:0]				CRC[3:0]			
bit 7							bit 0

Legend:			
R = Readable bit	W = Writable bit	U = Unimplemented bit, read as ‘0’	
-n = Value at POR	‘1’ = Bit is set	‘0’ = Bit is cleared	x = Bit is unknown

bit 15-12 **DATA4[3:0]:** Data Nibble 4 Data bits

bit 11-8 **DATA5[3:0]:** Data Nibble 5 Data bits

bit 7-4 **DATA6[3:0]:** Data Nibble 6 Data bits

bit 3-0 **CRC[3:0]:** CRC Nibble Data bits

Note 1: Register bits are read-only in Receive mode (RCVEN = 1). In Transmit mode, the CRC[3:0] bits are read-only when automatic CRC calculation is enabled (RCVEN = 0, CRCEN = 1).

REGISTER 18-4: SENTxDATH: SENTx RECEIVE DATA REGISTER HIGH(1)

R/W-0	R/W-0	R/W-0	R/W-0	R/W-0	R/W-0	R/W-0	R/W-0
STAT[3:0]				DATA1[3:0]			
bit 15							bit 8

R/W-0	R/W-0	R/W-0	R/W-0	R/W-0	R/W-0	R/W-0	R/W-0
DATA2[3:0]				DATA3[3:0]			
bit 7							bit 0

Legend:			
R = Readable bit	W = Writable bit	U = Unimplemented bit, read as ‘0’	
-n = Value at POR	‘1’ = Bit is set	‘0’ = Bit is cleared	x = Bit is unknown

bit 15-12 **STAT[3:0]:** Status Nibble Data bits

bit 11-8 **DATA1[3:0]:** Data Nibble 1 Data bits

bit 7-4 **DATA2[3:0]:** Data Nibble 2 Data bits

bit 3-0 **DATA3[3:0]:** Data Nibble 3 Data bits

Note 1: Register bits are read-only in Receive mode (RCVEN = 1). In Transmit mode, the CRC[3:0] bits are read-only when automatic CRC calculation is enabled (RCVEN = 0, CRCEN = 1).

NOTES:

© 2018-2019 Microchip Technology Inc.

19.0 TIMER1

Note 1: This data sheet summarizes the features of the dsPIC33CK64MP105 family of devices. It is not intended to be a comprehensive reference source. To complement the information in this data sheet, refer to **"Timer1 Module"** (www.microchip.com/DS70005279) in the *"dsPIC33/PIC24 Family Reference Manual"*.

The Timer1 module is a 16-bit timer that can operate as a free-running interval timer/counter.

The Timer1 module has the following unique features over other timers:

- Can be Operated in Asynchronous Counter mode
- Asynchronous Timer
- Operational during CPU Sleep mode
- Software Selectable Prescalers 1:1, 1:8, 1:64 and 1:256
- External Clock Selection Control
- The Timer1 External Clock Input (T1CK) can Optionally be Synchronized to the Internal Device Clock and the Clock Synchronization is Performed after the Prescaler

If Timer1 is used for SCCP, the timer should be running in Synchronous mode.

The Timer1 module can operate in one of the following modes:

- Timer mode
- Gated Timer mode
- Synchronous Counter mode
- Asynchronous Counter mode

A block diagram of Timer1 is shown in Figure 19-1.

FIGURE 19-1: 16-BIT TIMER1 MODULE BLOCK DIAGRAM

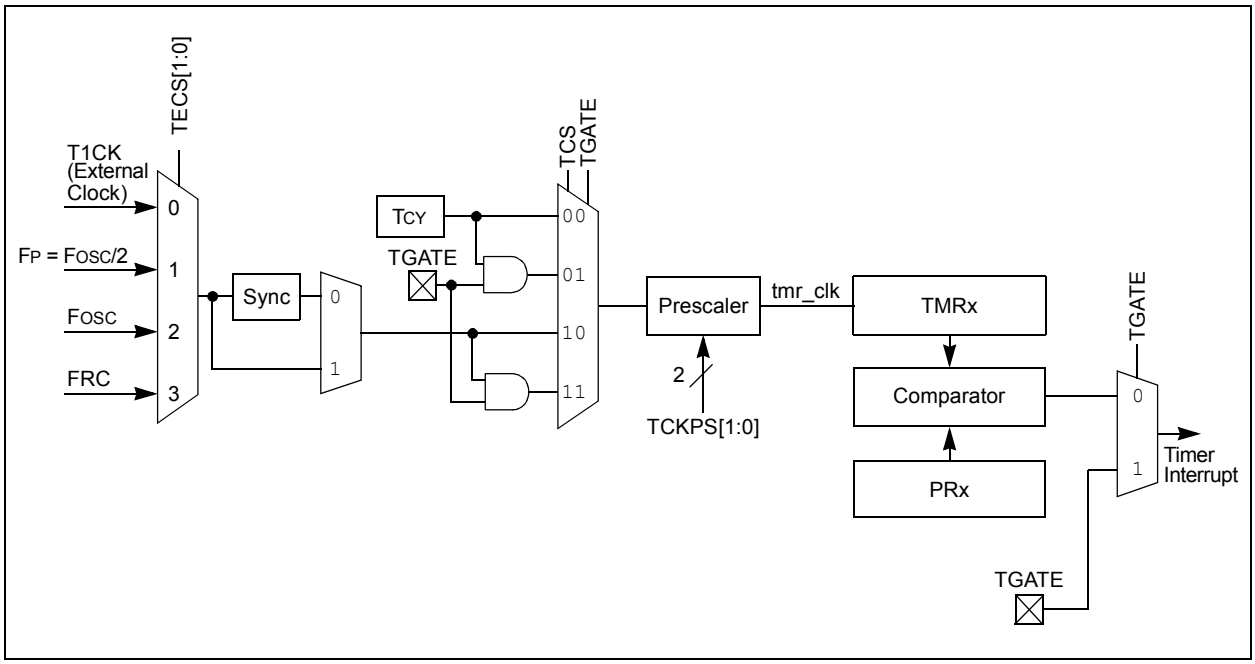

19.1 Timer1 Control Register

REGISTER 19-1: T1CON: TIMER1 CONTROL REGISTER

R/W-0	U-0	R/W-0	R/W-0	R-0	R-0	R/W-0	R/W-0
TON(1)	—	SIDL	TMWDIS	TMWIP	PRWIP	TECS1	TECS0
bit 15							bit 8

R/W-0	U-0	R/W-0	R/W-0	U-0	R/W-0	R/W-0	U-0
TGATE	—	TCKPS1	TCKPS0	—	TSYNC(1)	TCS(1)	—
bit 7							bit 0

Legend:			
R = Readable bit	W = Writable bit	U = Unimplemented bit, read as ‘0’	
-n = Value at POR	‘1’ = Bit is set	‘0’ = Bit is cleared	x = Bit is unknown

bit 15 **TON:** Timer1 On bit(1)
1 = Starts 16-bit Timer1
0 = Stops 16-bit Timer1

bit 14 **Unimplemented:** Read as ‘0’

bit 13 **SIDL:** Timer1 Stop in Idle Mode bit
1 = Discontinues module operation when device enters Idle mode
0 = Continues module operation in Idle mode

bit 12 **TMWDIS:** Asynchronous Timer1 Write Disable bit
1 = Timer writes are ignored while a posted write to TMR1 or PR1 is synchronized to the asynchronous clock domain
0 = Back-to-back writes are enabled in Asynchronous mode

bit 11 **TMWIP:** Asynchronous Timer1 Write in Progress bit
1 = Write to the timer in Asynchronous mode is pending
0 = Write to the timer in Asynchronous mode is complete

bit 10 **PRWIP:** Asynchronous Period Write in Progress bit
1 = Write to the Period register in Asynchronous mode is pending
0 = Write to the Period register in Asynchronous mode is complete

bit 9-8 **TECS[1:0]:** Timer1 Extended Clock Select bits
11 = FRC Clock
10 = FOSC Oscillator Clock
01 = FP = FOSC/2 Peripheral Clock
00 = External Clock comes from the T1CK pin

bit 7 **TGATE:** Timer1 Gated Time Accumulation Enable bit
When TCS = 1:
This bit is ignored.
When TCS = 0:
1 = Gated time accumulation is enabled
0 = Gated time accumulation is disabled

bit 6 **Unimplemented:** Read as ‘0’

Note 1: When Timer1 is enabled in External Synchronous Counter mode (TCS = 1, TSYNC = 1, TON = 1), any attempts by user software to write to the TMR1 register are ignored.

© 2018-2019 Microchip Technology Inc.

REGISTER 19-1: T1CON: TIMER1 CONTROL REGISTER (CONTINUED)

bit 5-4	**TCKPS[1:0]:** Timer1 Input Clock Prescale Select bits 11 = 1:256 10 = 1:64 01 = 1:8 00 = 1:1
bit 3	**Unimplemented:** Read as '0'
bit 2	**TSYNC:** Timer1 External Clock Input Synchronization Select bit(1) When TCS = 1: 1 = Synchronizes the External Clock input 0 = Does not synchronize the External Clock input When TCS = 0: This bit is ignored.
bit 1	**TCS:** Timer1 Clock Source Select bit(1) 1 = External Clock source selected by TECS[1:0] 0 = Internal peripheral clock (FP)
bit 0	**Unimplemented:** Read as '0'

Note 1: When Timer1 is enabled in External Synchronous Counter mode (TCS = 1, TSYNC = 1, TON = 1), any attempts by user software to write to the TMR1 register are ignored.

NOTES:

© 2018-2019 Microchip Technology Inc.

20.0 CAPTURE/COMPARE/PWM/ TIMER MODULES (SCCP/MCCP)

Note 1: This data sheet summarizes the features of the dsPIC33CK64MP105 family of devices. It is not intended to be a comprehensive reference source. For more information on the MCCP/SCCP modules, refer to **"Capture/Compare/ PWM/Timer (MCCP and SCCP)"** (www.microchip.com/DS30003035) in the *"dsPIC33/PIC24 Family Reference Manual"*.

dsPIC33CK64MP105 family devices include four SCCP and one MCCP Capture/Compare/PWM/Timer base modules, which provide the functionality of three different peripherals from earlier PIC24F devices. The module can operate in one of three major modes:

- General Purpose Timer
- Input Capture
- Output Compare/PWM

The module is provided in two different forms, distinguished by the number of PWM outputs that the module can generate. Single Capture/Compare/PWM (SCCP) output modules provide only one PWM output.

Multiple Capture/Compare/PWM (MCCP) output modules can provide up to six outputs and an extended range of power control features, depending on the pin count of the particular device. All other features of the modules are identical.

The SCCPx and MCCPx modules can be operated in only one of the three major modes at any time. The other modes are not available unless the module is reconfigured for the new mode.

A conceptual block diagram for the module is shown in Figure 20-1. All three modes share a time base generator and a common Timer register pair (CCPxTMRH/L); other shared hardware components are added as a particular mode requires.

Each module has a total of six control and status registers:

- CCPxCON1L (Register 20-1)
- CCPxCON1H (Register 20-2)
- CCPxCON2L (Register 20-3)
- CCPxCON2H (Register 20-4)
- CCPxCON3H (Register 20-6)
- CCPxSTATL (Register 20-7)

Each module also includes eight buffer/counter registers that serve as Timer Value registers or data holding buffers:

- CCPxTMRH/CCPxTMRL (CCPx Timer High/Low Counters)
- CCPxPRH/CCPxPRL (CCPx Timer Period High/Low)
- CCPxRA (CCPx Primary Output Compare Data Buffer)
- CCPxRB (CCPx Secondary Output Compare Data Buffer)
- CCPxBUFH/CCPxBUFL (CCPx Input Capture High/Low Buffers)

FIGURE 20-1: SCCPx CONCEPTUAL BLOCK DIAGRAM

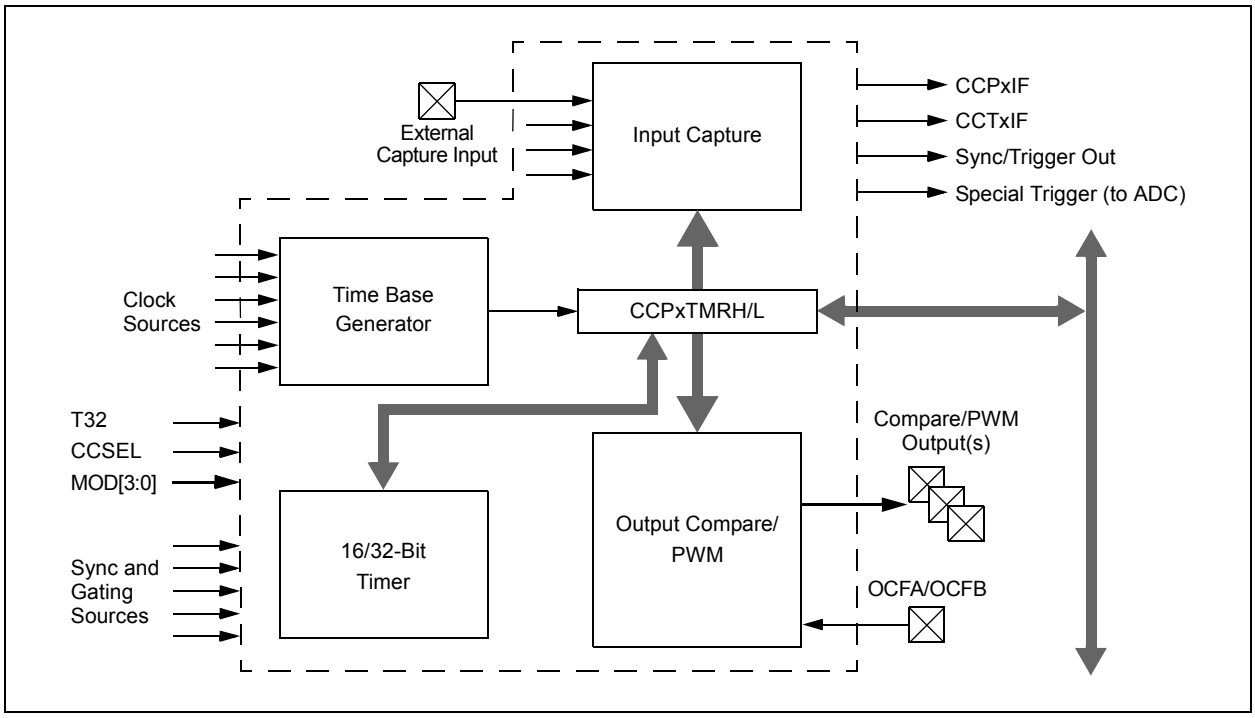

20.1 Time Base Generator

The Timer Clock Generator (TCG) generates a clock for the module's internal time base, using one of the clock signals already available on the microcontroller. This is used as the time reference for the module in its three major modes. The internal time base is shown in Figure 20-2.

There are eight inputs available to the clock generator, which are selected using the CLKSEL[2:0] bits (CCPxCON1L[10:8]). Available sources include the FRC and LPRC, the Secondary Oscillator and the TCLKI External Clock inputs. The system clock is the default source (CLKSEL[2:0] = 000).

FIGURE 20-2: TIMER CLOCK GENERATOR

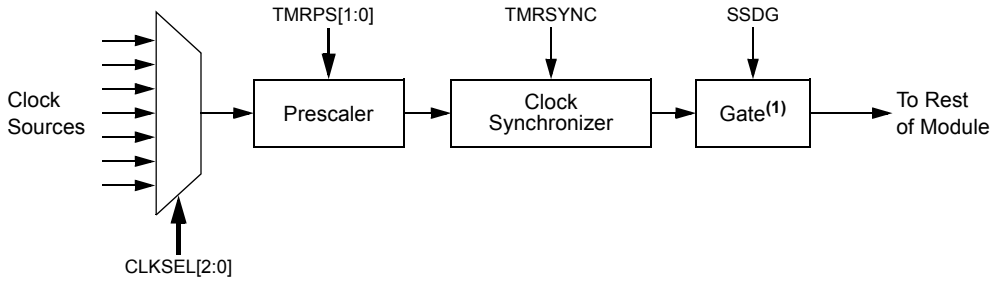

Note 1: Gating is available in Timer modes only.

© 2018-2019 Microchip Technology Inc.

20.2 General Purpose Timer

Timer mode is selected when CCSEL = 0 and MOD[3:0] = 0000. The timer can function as a 32-bit timer or a dual 16-bit timer, depending on the setting of the T32 bit (Table 20-1).

TABLE 20-1: TIMER OPERATION MODE

T32 (CCPxCON1L[5])	Operating Mode
0	Dual Timer Mode (16-bit)
1	Timer Mode (32-bit)

Dual 16-Bit Timer mode provides a simple timer function with two independent 16-bit timer/counters. The primary timer uses CCPxTMRL and CCPxPRL. Only the primary timer can interact with other modules on the device. It generates the SCCPx sync out signals for use by other SCCP modules. It can also use the SYNC[4:0] bits signal generated by other modules.

The secondary timer uses CCPxTMRH and CCPxPRH. It is intended to be used only as a periodic interrupt source for scheduling CPU events. It does not generate an output sync/trigger signal like the primary time base. In Dual Timer mode, the CCPx Secondary Timer Period register, CCPxPRH, generates the SCCP compare event (CCPxIF) used by many other modules on the device.

The 32-Bit Timer mode uses the CCPxTMRL and CCPxTMRH registers, together, as a single 32-bit timer. When CCPxTMRL overflows, CCPxTMRH increments by one. This mode provides a simple timer function when it is important to track long time periods. Note that the T32 bit (CCPxCON1L[5]) should be set before the CCPxTMRL or CCPxPRH registers are written to initialize the 32-bit timer.

20.2.1 SYNC AND TRIGGER OPERATION

In both 16-bit and 32-bit modes, the timer can also function in either synchronization (“sync”) or trigger operation. Both use the SYNC[4:0] bits (CCPxCON1H[4:0]) to determine the input signal source. The difference is how that signal affects the timer.

In sync operation, the timer Reset or clear occurs when the input selected by SYNC[4:0] is asserted. The timer immediately begins to count again from zero unless it is held for some other reason. Sync operation is used whenever the TRIGEN bit (CCPxCON1H[7]) is cleared. SYNC[4:0] can have any value, except ‘11111’.

In trigger operation, the timer is held in Reset until the input selected by SYNC[4:0] is asserted; when it occurs, the timer starts counting. Trigger operation is used whenever the TRIGEN bit is set. In Trigger mode, the timer will continue running after a trigger event as long as the CCPTRIG bit (CCPxSTATL[7]) is set. To clear CCPTRIG, the TRCLR bit (CCPxSTATL[5]) must be set to clear the trigger event, reset the timer and hold it at zero until another trigger event occurs. On dsPIC33CK64MP105 family devices, trigger operation can only be used when the system clock is the time base source (CLKSEL[2:0] = 000).

FIGURE 20-3: DUAL 16-BIT TIMER MODE

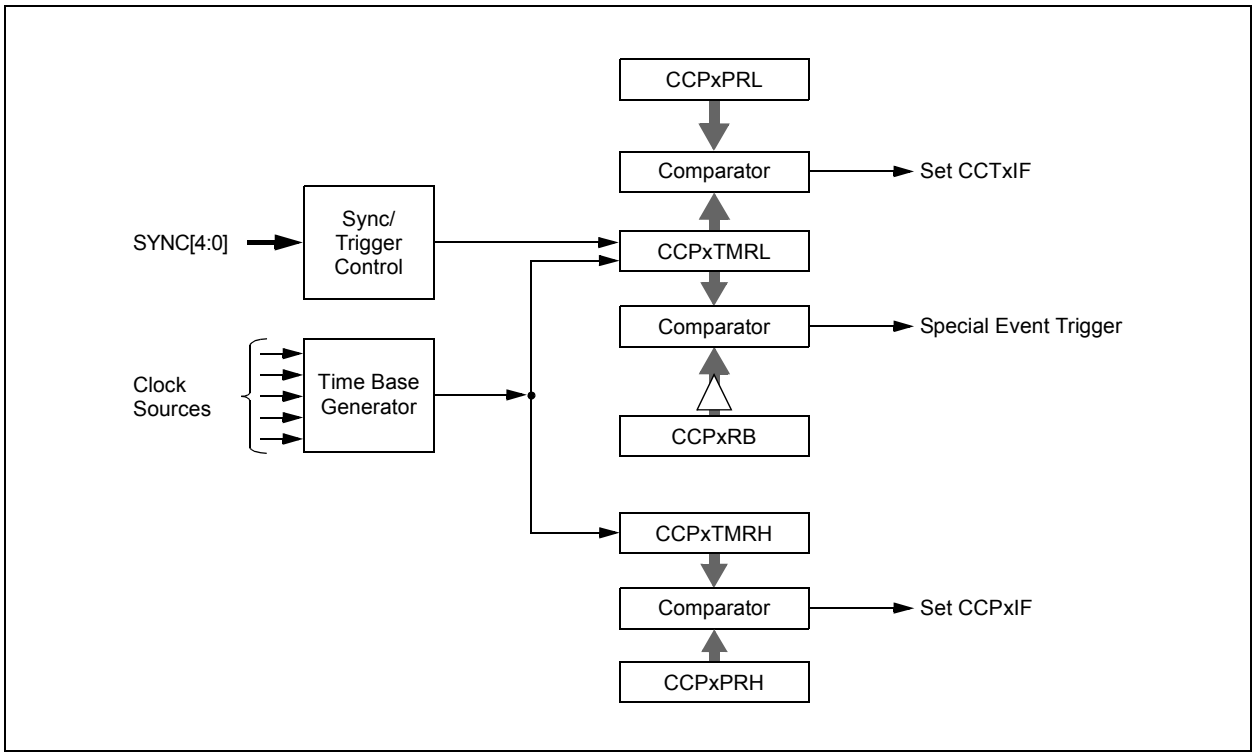

FIGURE 20-4: 32-BIT TIMER MODE

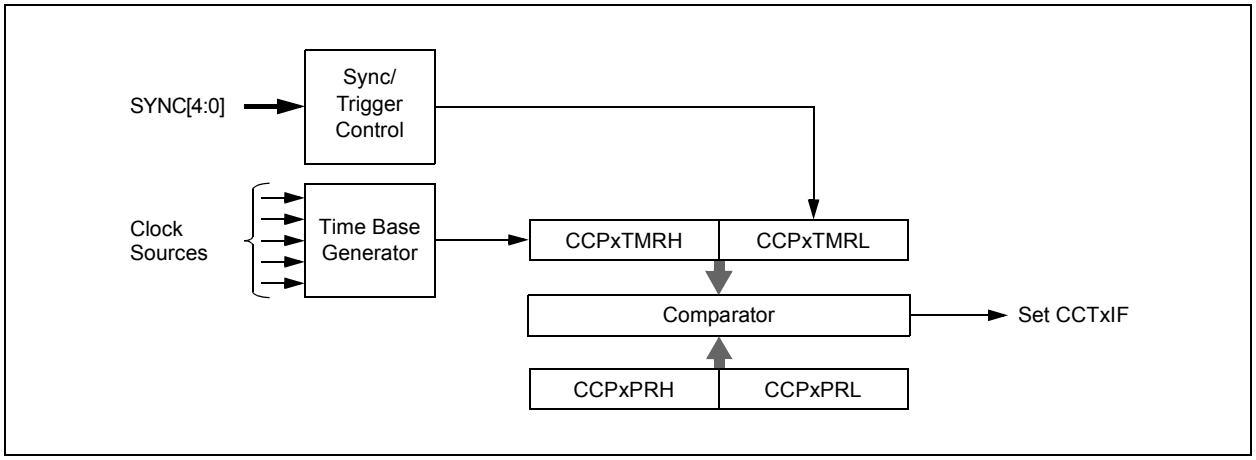

© 2018-2019 Microchip Technology Inc.

20.3 Output Compare Mode

Output Compare mode compares the Timer register value with the value of one or two Compare registers, depending on its mode of operation. The Output Compare x module, on compare match events, has the ability to generate a single output transition or a train of output pulses. Like most PIC® MCU peripherals, the Output Compare x module can also generate interrupts on a compare match event.

Table 20-2 shows the various modes available in Output Compare modes.

TABLE 20-2: OUTPUT COMPARE x/PWMx MODES

MOD[3:0] (CCPxCON1L[3:0])	T32 (CCPxCON1L[5])	Operating Mode	
0001	0	Output High on Compare (16-bit)	Single Edge Mode
0001	1	Output High on Compare (32-bit)	
0010	0	Output Low on Compare (16-bit)	
0010	1	Output Low on Compare (32-bit)	
0011	0	Output Toggle on Compare (16-bit)	
0011	1	Output Toggle on Compare (32-bit)	
0100	0	Dual Edge Compare (16-bit)	Dual Edge Mode
0101	0	Dual Edge Compare (16-bit buffered)	PWM Mode

FIGURE 20-5: OUTPUT COMPARE x BLOCK DIAGRAM

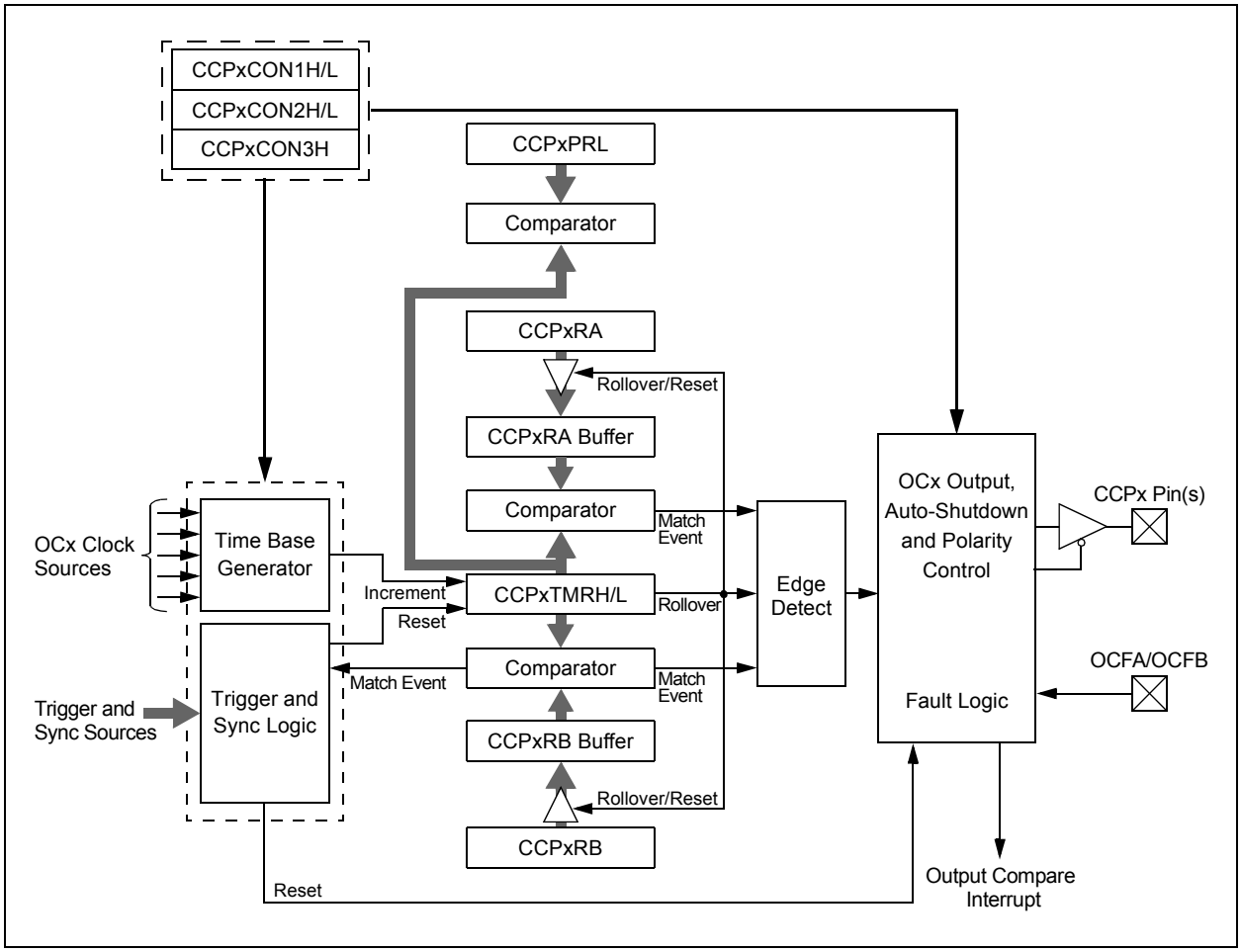

20.4 Input Capture Mode

Input Capture mode is used to capture a timer value from an independent timer base, upon an event, on an input pin or other internal trigger source. The input capture features are useful in applications requiring frequency (time period) and pulse measurement. Figure 20-6 depicts a simplified block diagram of Input Capture mode.

Input Capture mode uses a dedicated 16/32-bit, synchronous, up counting timer for the capture function. The timer value is written to the FIFO when a capture event occurs. The internal value may be read (with a synchronization delay) using the CCPxTMRH/L register.

To use Input Capture mode, the CCSEL bit (CCPxCON1L[4]) must be set. The T32 and the MOD[3:0] bits are used to select the proper Capture mode, as shown in Table 20-3.

TABLE 20-3: INPUT CAPTURE x MODES

MOD[3:0] (CCPxCON1L[3:0])	T32 (CCPxCON1L[5])	Operating Mode
0000	0	Edge Detect (16-bit capture)
0000	1	Edge Detect (32-bit capture)
0001	0	Every Rising (16-bit capture)
0001	1	Every Rising (32-bit capture)
0010	0	Every Falling (16-bit capture)
0010	1	Every Falling (32-bit capture)
0011	0	Every Rising/Falling (16-bit capture)
0011	1	Every Rising/Falling (32-bit capture)
0100	0	Every 4th Rising (16-bit capture)
0100	1	Every 4th Rising (32-bit capture)
0101	0	Every 16th Rising (16-bit capture)
0101	1	Every 16th Rising (32-bit capture)

FIGURE 20-6: INPUT CAPTURE x BLOCK DIAGRAM

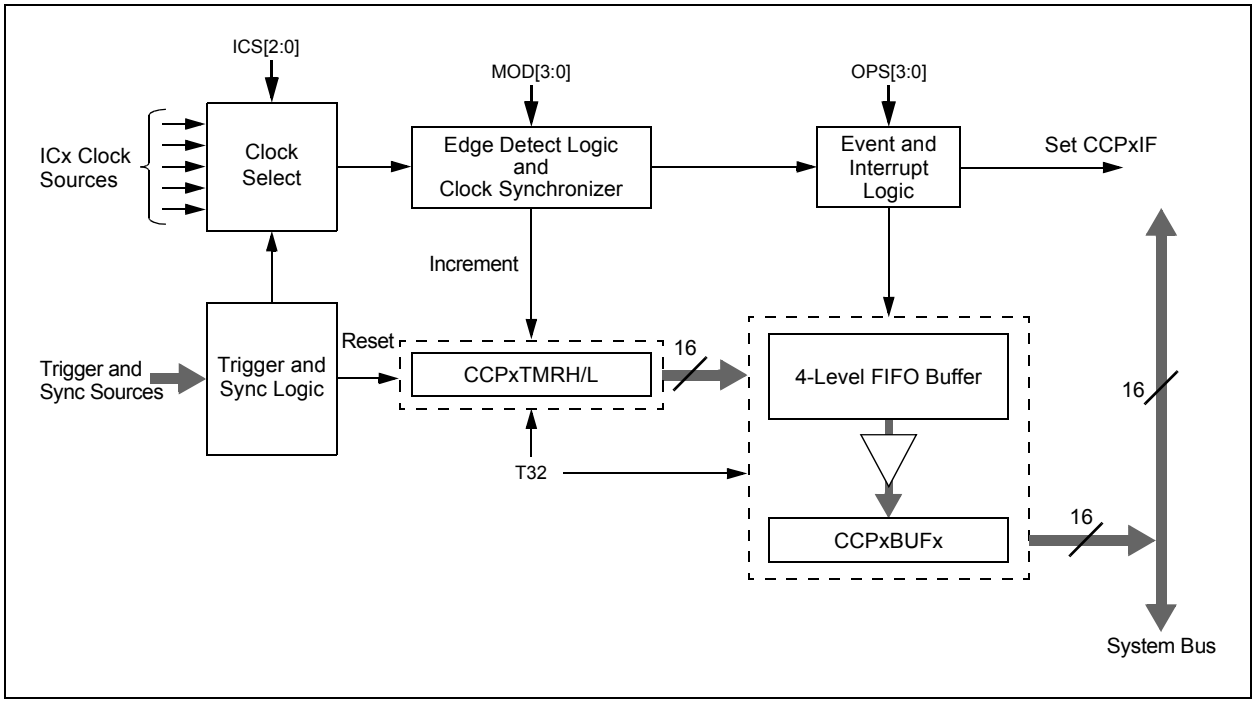

© 2018-2019 Microchip Technology Inc.

20.5 Auxiliary Output

The SCCPx modules have an auxiliary (secondary) output that provides other peripherals access to internal module signals. The auxiliary output is intended to connect to other SCCP modules, or other digital peripherals, to provide these types of functions:

- Time Base Synchronization
- Peripheral Trigger and Clock Inputs
- Signal Gating

The type of output signal is selected using the AUXOUT[1:0] control bits (CCPxCON2H[4:3]). The type of output signal is also dependent on the module operating mode.

TABLE 20-4: AUXILIARY OUTPUT

AUXOUT[1:0]	CCSEL	MOD[3:0]	Comments	Signal Description
00	x	xxxx	Auxiliary output disabled	No Output
01	0	0000	Time Base modes	Time Base Period Reset or Rollover
10				Special Event Trigger Output
11				No Output
01	0	0001 through 1111	Output Compare modes	Time Base Period Reset or Rollover
10				Output Compare Event Signal
11				Output Compare Signal
01	1	xxxx	Input Capture modes	Time Base Period Reset or Rollover
10				Reflects the Value of the ICDIS bit
11				Input Capture Event Signal

20.6 SCCP/MCCP Control/Status Registers

REGISTER 20-1: CCPxCON1L: CCPx CONTROL 1 LOW REGISTERS

R/W-0	U-0	R/W-0	R/W-0	R/W-0	R/W-0	R/W-0	R/W-0
CCPON	—	CCPSIDL	CCPSLP	TMRSYNC	CLKSEL2	CLKSEL1	CLKSEL0
bit 15							bit 8

R/W-0	R/W-0	R/W-0	R/W-0	R/W-0	R/W-0	R/W-0	R/W-0
TMRPS1	TMRPS0	T32	CCSEL	MOD3	MOD2	MOD1	MOD0
bit 7							bit 0

Legend:			
R = Readable bit	W = Writable bit	U = Unimplemented bit, read as ‘0’	
-n = Value at POR	‘1’ = Bit is set	‘0’ = Bit is cleared	x = Bit is unknown

bit 15 **CCPON:** CCPx Module Enable bit
- 1 = Module is enabled with an operating mode specified by the MOD[3:0] control bits
- 0 = Module is disabled

bit 14 **Unimplemented:** Read as ‘0’

bit 13 **CCPSIDL:** CCPx Stop in Idle Mode Bit
- 1 = Discontinues module operation when device enters Idle mode
- 0 = Continues module operation in Idle mode

bit 12 **CCPSLP:** CCPx Sleep Mode Enable bit
- 1 = Module continues to operate in Sleep modes
- 0 = Module does not operate in Sleep modes

bit 11 **TMRSYNC:** Time Base Clock Synchronization bit
- 1 = Asynchronous module time base clock is selected and synchronized to the internal system clocks (CLKSEL[2:0] ≠ 000)
- 0 = Synchronous module time base clock is selected and does not require synchronization (CLKSEL[2:0] = 000)

bit 10-8 **CLKSEL[2:0]:** CCPx Time Base Clock Select bits
- 111 = PPS TxCK input
- 110 = CLC4
- 101 = CLC3
- 100 = CLC2
- 011 = CLC1
- 010 = Reserved
- 001 = Reference Clock (REFCLKO)
- 000 = Peripheral Clock ($F_P = F_{OSC}/2$)

bit 7-6 **TMRPS[1:0]:** Time Base Prescale Select bits
- 11 = 1:64 Prescaler
- 10 = 1:16 Prescaler
- 01 = 1:4 Prescaler
- 00 = 1:1 Prescaler

bit 5 **T32:** 32-Bit Time Base Select bit
- 1 = Uses 32-bit time base for timer, single edge output compare or input capture function
- 0 = Uses 16-bit time base for timer, single edge output compare or input capture function

bit 4 **CCSEL:** Capture/Compare Mode Select bit
- 1 = Input Capture peripheral
- 0 = Output Compare/PWM/Timer peripheral (exact function is selected by the MOD[3:0] bits)

© 2018-2019 Microchip Technology Inc.

REGISTER 20-1: CCPxCON1L: CCPx CONTROL 1 LOW REGISTERS (CONTINUED)

bit 3-0 **MOD[3:0]:** CCPx Mode Select bits

For CCSEL = 1 (Input Capture modes):

1xxx = Reserved
011x = Reserved
0101 = Capture every 16th rising edge
0100 = Capture every 4th rising edge
0011 = Capture every rising and falling edge
0010 = Capture every falling edge
0001 = Capture every rising edge
0000 = Capture every rising and falling edge (Edge Detect mode)

For CCSEL = 0 (Output Compare/Timer modes):

1111 = External Input mode: Pulse generator is disabled, source is selected by ICS[2:0]
1110 = Reserved
110x = Reserved
10xx = Reserved
0111 = Reserved
0110 = Reserved
0101 = Dual Edge Compare mode, buffered
0100 = Dual Edge Compare mode
0011 = 16-Bit/32-Bit Single Edge mode, toggles output on compare match
0010 = 16-Bit/32-Bit Single Edge mode, drives output low on compare match
0001 = 16-Bit/32-Bit Single Edge mode, drives output high on compare match
0000 = 16-Bit/32-Bit Timer mode, output functions are disabled

REGISTER 20-2: CCPxCON1H: CCPx CONTROL 1 HIGH REGISTERS

R/W-0	R/W-0	U-0	U-0	R/W-0	R/W-0	R/W-0	R/W-0
OPSSRC(1)	RTRGEN(2)	—	—	OPS3(3)	OPS2(3)	OPS1(3)	OPS0(3)
bit 15							bit 8

R/W-0	R/W-0	R/W-0	R/W-0	R/W-0	R/W-0	R/W-0	R/W-0
TRIGEN	ONESHOT	ALTSYNC	SYNC4	SYNC3	SYNC2	SYNC1	SYNC0
bit 7							bit 0

Legend:			
R = Readable bit	W = Writable bit	U = Unimplemented bit, read as ‘0’	
-n = Value at POR	‘1’ = Bit is set	‘0’ = Bit is cleared	x = Bit is unknown

bit 15 **OPSSRC:** Output Postscaler Source Select bit(1)
- 1 = Output postscaler scales module trigger output events
- 0 = Output postscaler scales time base interrupt events

bit 14 **RTRGEN:** Retrigger Enable bit(2)
- 1 = Time base can be retriggered when TRIGEN bit = 1
- 0 = Time base may not be retriggered when TRIGEN bit = 1

bit 13-12 **Unimplemented:** Read as ‘0’

bit 11-8 **OPS3[3:0]:** CCPx Interrupt Output Postscale Select bits(3)
- 1111 = Interrupt every 16th time base period match
- 1110 = Interrupt every 15th time base period match
- . . .
- 0100 = Interrupt every 5th time base period match
- 0011 = Interrupt every 4th time base period match or 4th input capture event
- 0010 = Interrupt every 3rd time base period match or 3rd input capture event
- 0001 = Interrupt every 2nd time base period match or 2nd input capture event
- 0000 = Interrupt after each time base period match or input capture event

bit 7 **TRIGEN:** CCPx Trigger Enable bit
- 1 = Trigger operation of time base is enabled
- 0 = Trigger operation of time base is disabled

bit 6 **ONESHOT:** One-Shot Trigger Mode Enable bit
- 1 = One-Shot Trigger mode is enabled; trigger duration is set by OSCNT[2:0]
- 0 = One-Shot Trigger mode is disabled

bit 5 **ALTSYNC:** CCPx Clock Select bits
- 1 = An alternate signal is used as the module synchronization output signal
- 0 = The module synchronization output signal is the Time Base Reset/rollover event

bit 4-0 **SYNC[4:0]:** CCPx Synchronization Source Select bits
See Table 20-5 for the definition of inputs.

Note 1: This control bit has no function in Input Capture modes.
2: This control bit has no function when TRIGEN = 0.
3: Output postscale settings, from 1:5 to 1:16 (0100-1111), will result in a FIFO buffer overflow for Input Capture modes.

© 2018-2019 Microchip Technology Inc.

TABLE 20-5: SYNCHRONIZATION SOURCES

SYNC[4:0]	Synchronization Source
00000	None; Timer with Rollover on CCPxPR Match or FFFFh
00001	Sync Output SCCP1
00010	Sync Output SCCP2
00011	Sync Output SCCP3
00100	Sync Output SCCP4
00101-01000	Reserved
01001	INT0
01010	INT1
01011	INT2
01100	UART1 RX Edge Detect
01101	UART1 TX Edge Detect
01110	UART2 RX Edge Detect
01111	UART2 TX Edge Detect
10000	CLC1 Output
10001	CLC2 Output
10010	CLC3 Output
10011	CLC4 Output
10100	UART3 RX Edge Detect
10101	UART3 TX Edge Detect
10110	Sync Output MCCP5
10111	Comparator 1 Output
11000	Comparator 2 Output
11001	Comparator 3 Output
11010-11110	Reserved
11111	None; Timer with Auto-Rollover (FFFFh → 0000h)

REGISTER 20-3: CCPxCON2L: CCPx CONTROL 2 LOW REGISTERS

R/W-0	R/W-0	U-0	R/W-0	U-0	U-0	U-0	U-0
PWMRSEN	ASDGM	—	SSDG	—	—	—	—
bit 15							bit 8

R/W-0	R/W-0	R/W-0	R/W-0	R/W-0	R/W-0	R/W-0	R/W-0
ASDG7	ASDG6	ASDG5	ASDG4	ASDG3	ASDG2	ASDG1	ASDG0
bit 7							bit 0

Legend:			
R = Readable bit	W = Writable bit	U = Unimplemented bit, read as ‘0’	
-n = Value at POR	‘1’ = Bit is set	‘0’ = Bit is cleared	x = Bit is unknown

bit 15 **PWMRSEN:** CCPx PWM Restart Enable bit
- 1 = ASEVT bit clears automatically at the beginning of the next PWM period, after the shutdown input has ended
- 0 = ASEVT bit must be cleared in software to resume PWM activity on output pins

bit 14 **ASDGM:** CCPx Auto-Shutdown Gate Mode Enable bit
- 1 = Waits until the next Time Base Reset or rollover for shutdown to occur
- 0 = Shutdown event occurs immediately

bit 13 **Unimplemented:** Read as ‘0’

bit 12 **SSDG:** CCPx Software Shutdown/Gate Control bit
- 1 = Manually forces auto-shutdown, timer clock gate or input capture signal gate event (setting of ASDGM bit still applies)
- 0 = Normal module operation

bit 11-8 **Unimplemented:** Read as ‘0’

bit 7-0 **ASDG[7:0]:** CCPx Auto-Shutdown/Gating Source Enable bits
- 1 = ASDGx Source n is enabled (see Table 20-6 for auto-shutdown/gating sources)
- 0 = ASDGx Source n is disabled

TABLE 20-6: AUTO-SHUTDOWN AND GATING SOURCES

ASDG[x] Bit	Auto-Shutdown/Gating Source				
	SCCP1	SCCP2	SCCP3	SCCP4	MCCP5
0	Comparator 1 Output				
1	Comparator 2 Output				
2	OCFC				
3	OCFD				
4	ICM1(1)	ICM2(1)	ICM3(1)	ICM4(1)	ICM5(1)
5	CLC1(1)				
6	OCFA(1)				
7	OCFB(1)				

Note 1: Selected by Peripheral Pin Select (PPS).

© 2018-2019 Microchip Technology Inc.

REGISTER 20-4: CCPxCON2H: CCPx CONTROL 2 HIGH REGISTERS

R/W-0	U-0	R/W-0	R/W-0	R/W-0	R/W-0	R/W-0	R/W-0
OENSYNC	—	OCFEN(1)	OCEEN(1)	OCDEN(1)	OCCEN(1)	OCBEN(1)	OCAEN
bit 15							bit 8

R/W-0	R/W-0	U-0	R/W-0	R/W-0	R/W-0	R/W-0	R/W-0
ICGSM1	ICGSM0	—	AUXOUT1	AUXOUT0	ICS2	ICS1	ICS0
bit 7							bit 0

Legend:			
R = Readable bit	W = Writable bit	U = Unimplemented bit, read as ‘0’	
-n = Value at POR	‘1’ = Bit is set	‘0’ = Bit is cleared	x = Bit is unknown

bit 15 **OENSYNC:** Output Enable Synchronization bit
- 1 = Update by output enable bits occurs on the next Time Base Reset or rollover
- 0 = Update by output enable bits occurs immediately

bit 14 **Unimplemented:** Read as ‘0’

bit 13-8 **OC[F:A]EN:** Output Enable/Steering Control bits(1)
- 1 = OCMx pin is controlled by the CCPx module and produces an output compare or PWM signal
- 0 = OCMx pin is not controlled by the CCPx module; the pin is available to the port logic or another peripheral multiplexed on the pin

bit 7-6 **ICGSM[1:0]:** Input Capture Gating Source Mode Control bits
- 11 = Reserved
- 10 = One-Shot mode: Falling edge from gating source disables future capture events (ICDIS = 1)
- 01 = One-Shot mode: Rising edge from gating source enables future capture events (ICDIS = 0)
- 00 = Level-Sensitive mode: A high level from gating source will enable future capture events; a low level will disable future capture events

bit 5 **Unimplemented:** Read as ‘0’

bit 4-3 **AUXOUT[1:0]:** Auxiliary Output Signal on Event Selection bits
- 11 = Input capture or output compare event; no signal in Timer mode
- 10 = Signal output is defined by module operating mode (see Table 20-4)
- 01 = Time base rollover event (all modes)
- 00 = Disabled

bit 2-0 **ICS[2:0]:** Input Capture Source Select bits
- 111 = CLC4 output
- 110 = CLC3 output
- 101 = CLC2 output
- 100 = CLC1 output
- 011 = Comparator 3 output
- 010 = Comparator 2 output
- 001 = Comparator 1 output
- 000 = Input Capture ICMx pin (PPS)

Note 1: OCFEN through OCBEN (bits[13:9]) are implemented in the MCCP5 module only.

REGISTER 20-5: CCPxCON3L: CCPx CONTROL 3 LOW REGISTERS[1]

U-0	U-0	U-0	U-0	U-0	U-0	U-0	U-0
—	—	—	—	—	—	—	—
bit 15							bit 8

U-0	U-0	R/W-0	R/W-0	R/W-0	R/W-0	R/W-0	R/W-0
—	—	DT[5:0]					
bit 7							bit 0

Legend:			
R = Readable bit	W = Writable bit	U = Unimplemented bit, read as ‘0’	
-n = Value at POR	‘1’ = Bit is set	‘0’ = Bit is cleared	x = Bit is unknown

bit 15-6 **Unimplemented:** Read as ‘0’

bit 5-0 **DT[5:0]:** CCPx Dead-Time Select bits
111111 = Inserts 63 dead-time delay periods between complementary output signals
111110 = Inserts 62 dead-time delay periods between complementary output signals
. . .
000010 = Inserts 2 dead-time delay periods between complementary output signals
000001 = Inserts 1 dead-time delay period between complementary output signals
000000 = Dead-time logic is disabled

Note 1: This register is implemented in the MCCP9 module only.

© 2018-2019 Microchip Technology Inc.

REGISTER 20-6: CCPxCON3H: CCPx CONTROL 3 HIGH REGISTERS

R/W-0	R/W-0	R/W-0	R/W-0	U-0	R/W-0	R/W-0	R/W-0
OETRIG	OSCNT2	OSCNT1	OSCNT0	—	OUTM2(1)	OUTM1(1)	OUTM0(1)
bit 15							bit 8

U-0	U-0	R/W-0	R/W-0	R/W-0	R/W-0	R/W-0	R/W-0
—	—	POLACE	POLBDF(1)	PSSACE1	PSSACE0	PSSBDF1(1)	PSSBDF0(1)
bit 7							bit 0

Legend:			
R = Readable bit	W = Writable bit	U = Unimplemented bit, read as ‘0’	
-n = Value at POR	‘1’ = Bit is set	‘0’ = Bit is cleared	x = Bit is unknown

bit 15 **OETRIG:** CCPx Dead-Time Select bit
1 = For Triggered mode (TRIGEN = 1): Module does not drive enabled output pins until triggered
0 = Normal output pin operation

bit 14-12 **OSCNT[2:0]:** One-Shot Event Count bits
111 = Extends one-shot event by seven time base periods (eight time base periods total)
110 = Extends one-shot event by six time base periods (seven time base periods total)
101 = Extends one-shot event by five time base periods (six time base periods total)
100 = Extends one-shot event by four time base periods (five time base periods total)
011 = Extends one-shot event by three time base periods (four time base periods total)
010 = Extends one-shot event by two time base periods (three time base periods total)
001 = Extends one-shot event by one time base period (two time base periods total)
000 = Does not extend one-shot Trigger event

bit 11 **Unimplemented:** Read as ‘0’

bit 10-8 **OUTM[2:0]:** PWMx Output Mode Control bits(1)
111 = Reserved
110 = Output Scan mode
101 = Brush DC Output mode, forward
100 = Brush DC Output mode, reverse
011 = Reserved
010 = Half-Bridge Output mode
001 = Push-Pull Output mode
000 = Steerable Single Output mode

bit 7-6 **Unimplemented:** Read as ‘0’

bit 5 **POLACE:** CCPx Output Pins, OCMxA, OCMxC and OCMxE, Polarity Control bit
1 = Output pin polarity is active-low
0 = Output pin polarity is active-high

bit 4 **POLBDF:** CCPx Output Pins, OCMxB, OCMxD and OCMxF, Polarity Control bit(1)
1 = Output pin polarity is active-low
0 = Output pin polarity is active-high

bit 3-2 **PSSACE[1:0]:** PWMx Output Pins, OCMxA, OCMxC and OCMxE, Shutdown State Control bits
11 = Pins are driven active when a shutdown event occurs
10 = Pins are driven inactive when a shutdown event occurs
0x = Pins are tri-stated when a shutdown event occurs

bit 1-0 **PSSBDF[1:0]:** PWMx Output Pins, OCMxB, OCMxD, and OCMxF, Shutdown State Control bits(1)
11 = Pins are driven active when a shutdown event occurs
10 = Pins are driven inactive when a shutdown event occurs
0x = Pins are in a high-impedance state when a shutdown event occurs

Note 1: These bits are implemented in the MCCP9 module only.

REGISTER 20-7: CCPxSTATL: CCPx STATUS REGISTER

U-0	U-0	U-0	U-0	U-0	W1-0	U-0	U-0
—	—	—	—	—	ICGARM	—	—
bit 15							bit 8

R-0	W1-0	W1-0	R/C-0	R/C-0	R/C-0	R/C-0	R/C-0
CCPTRIG	TRSET	TRCLR	ASEVT	SCEVT	ICDIS	ICOV	ICBNE
bit 7							bit 0

Legend:	C = Clearable bit		
R = Readable bit	W1 = Write ‘1’ Only bit	U = Unimplemented bit, read as ‘0’	
-n = Value at POR	‘1’ = Bit is set	‘0’ = Bit is cleared	x = Bit is unknown

bit 15-11 **Unimplemented:** Read as ‘0’

bit 10 **ICGARM:** Input Capture Gate Arm bit
A write of ‘1’ to this location will arm the input capture gating logic for a one-shot gate event when ICGSM[1:0] = 01 or 10. Bit always reads as ‘0’.

bit 9-8 **Unimplemented:** Read as ‘0’

bit 7 **CCPTRIG:** CCPx Trigger Status bit
1 = Timer has been triggered and is running
0 = Timer has not been triggered and is held in Reset

bit 6 **TRSET:** CCPx Trigger Set Request bit
Writes ‘1’ to this location to trigger the timer when TRIGEN = 1 (location always reads as ‘0’).

bit 5 **TRCLR:** CCPx Trigger Clear Request bit
Writes ‘1’ to this location to cancel the timer trigger when TRIGEN = 1 (location always reads as ‘0’).

bit 4 **ASEVT:** CCPx Auto-Shutdown Event Status/Control bit
1 = A shutdown event is in progress; CCPx outputs are in the shutdown state
0 = CCPx outputs operate normally

bit 3 **SCEVT:** Single Edge Compare Event Status bit
1 = A single edge compare event has occurred
0 = A single edge compare event has not occurred

bit 2 **ICDIS:** Input Capture x Disable bit
1 = Event on Input Capture x pin (ICx) does not generate a capture event
0 = Event on Input Capture x pin will generate a capture event

bit 1 **ICOV:** Input Capture x Buffer Overflow Status bit
1 = The Input Capture x FIFO buffer has overflowed
0 = The Input Capture x FIFO buffer has not overflowed

bit 0 **ICBNE:** Input Capture x Buffer Status bit
1 = Input Capture x buffer has data available
0 = Input Capture x buffer is empty

© 2018-2019 Microchip Technology Inc.

21.0 CONFIGURABLE LOGIC CELL (CLC)

Note 1: This data sheet summarizes the features of the dsPIC33CK64MP105 family of devices. It is not intended to be a comprehensive reference source. For more information, refer to **"Configurable Logic Cell (CLC)"** (www.microchip.com/DS70005298) in the *"dsPIC33/PIC24 Family Reference Manual"*. The information in this data sheet supersedes the information in the FRM.

The Configurable Logic Cell (CLC) module allows the user to specify combinations of signals as inputs to a logic function and to use the logic output to control other peripherals or I/O pins. This provides greater flexibility and potential in embedded designs, since the CLC module can operate outside the limitations of software execution, and supports a vast amount of output designs.

There are four input gates to the selected logic function. These four input gates select from a pool of up to 32 signals that are selected using four data source selection multiplexers. Figure 21-1 shows an overview of the module.

Figure 21-3 shows the details of the data source multiplexers and Figure 21-2 shows the logic input gate connections.

FIGURE 21-1: CLCx MODULE

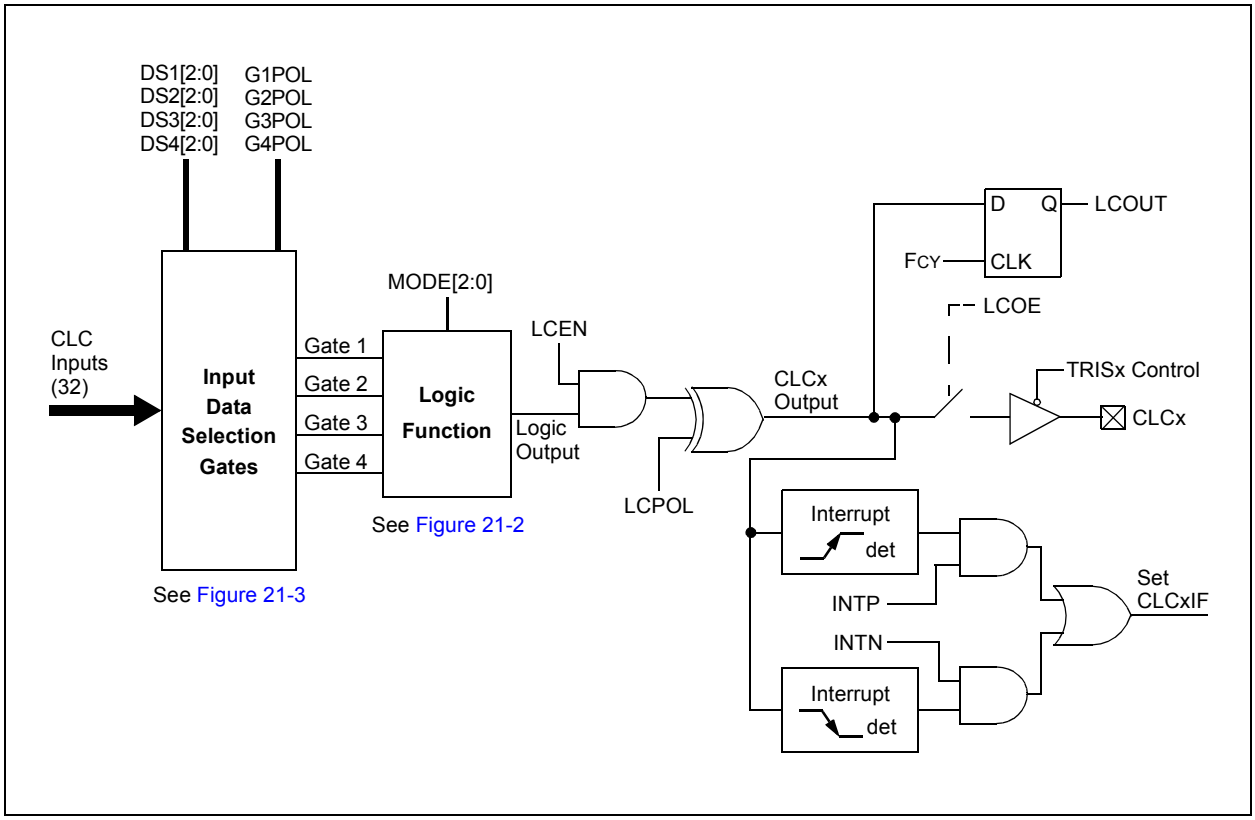

FIGURE 21-2: CLCx LOGIC FUNCTION COMBINATORIAL OPTIONS

AND – OR

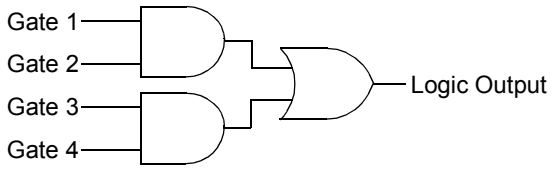

MODE[2:0] = 000

OR – XOR

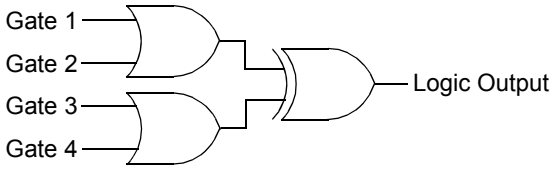

MODE[2:0] = 001

4-Input AND

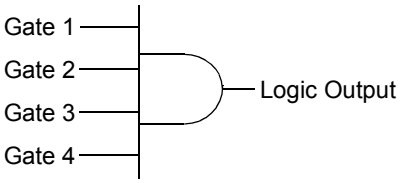

MODE[2:0] = 010

S-R Latch

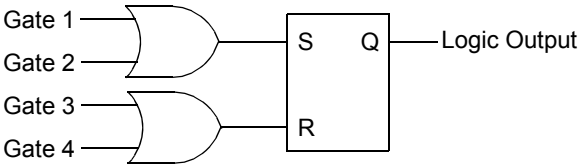

MODE[2:0] = 011

1-Input D Flip-Flop with S and R

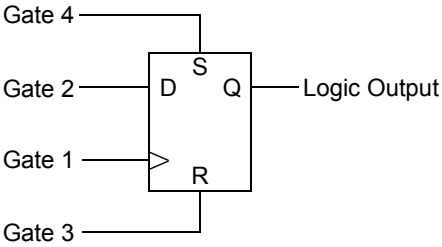

MODE[2:0] = 100

2-Input D Flip-Flop with R

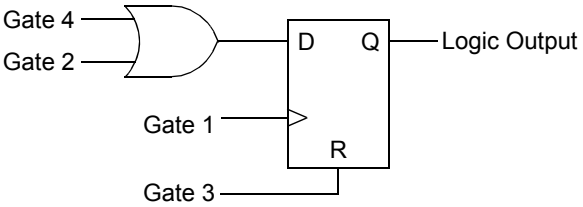

MODE[2:0] = 101

J-K Flip-Flop with R

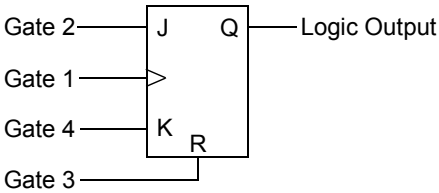

MODE[2:0] = 110

1-Input Transparent Latch with S and R

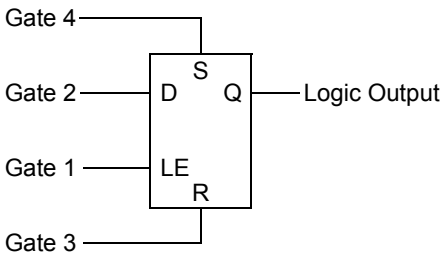

MODE[2:0] = 111

© 2018-2019 Microchip Technology Inc.

FIGURE 21-3: CLCx INPUT SOURCE SELECTION DIAGRAM

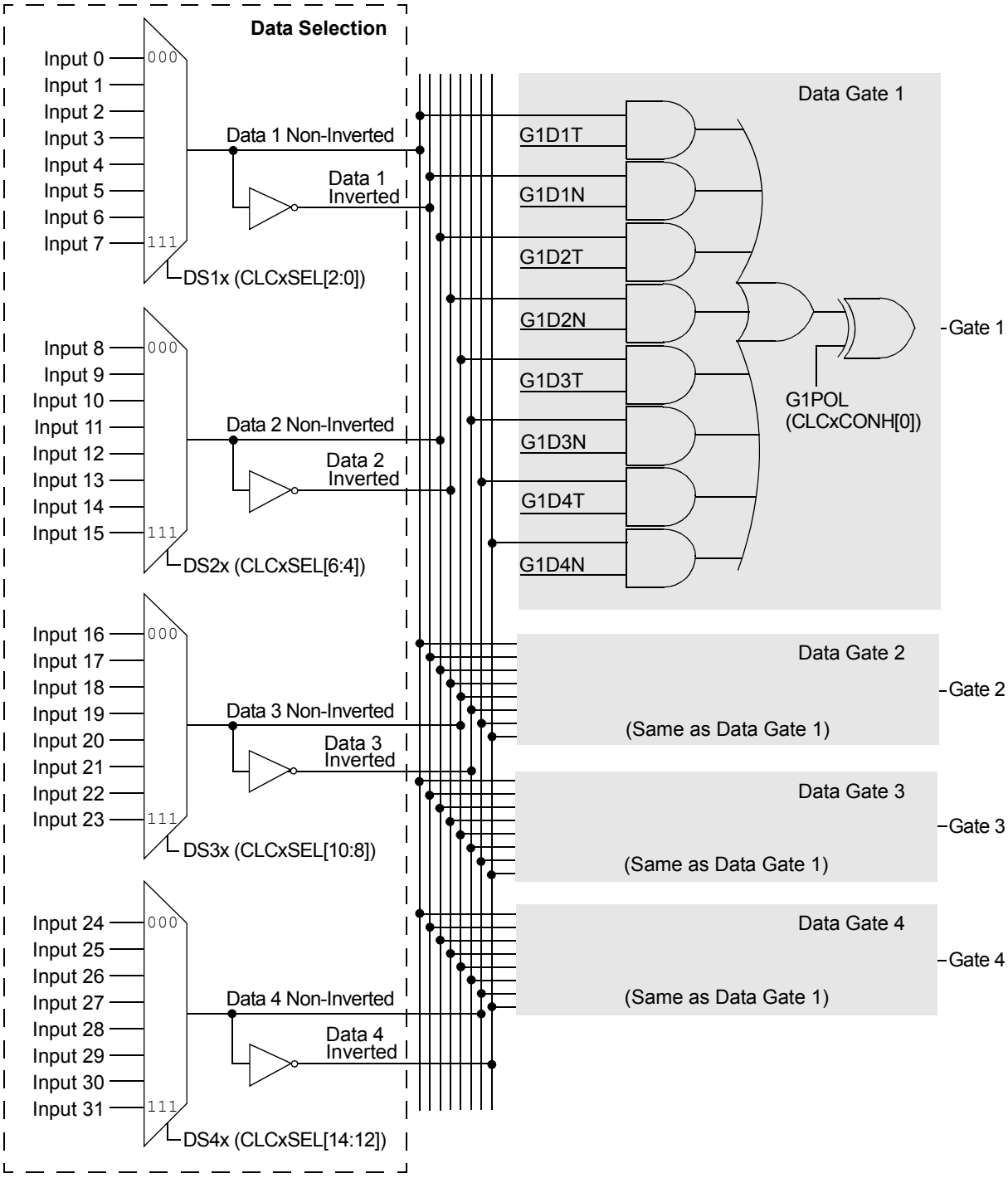

Note: All controls are undefined at power-up.

21.1 Control Registers

The CLCx module is controlled by the following registers:

- CLCxCONL
- CLCxCONH
- CLCxSEL
- CLCxGLSL
- CLCxGLSH

The CLCx Control registers (CLCxCONL and CLCxCONH) are used to enable the module and interrupts, control the output enable bit, select output polarity and select the logic function. The CLCx Control registers also allow the user to control the logic polarity of not only the cell output, but also some intermediate variables.

The CLCx Input MUX Select register (CLCxSEL) allows the user to select up to four data input sources using the four data input selection multiplexers. Each multiplexer has a list of eight data sources available.

The CLCx Gate Logic Input Select registers (CLCxGLSL and CLCxGLSH) allow the user to select which outputs from each of the selection MUXes are used as inputs to the input gates of the logic cell. Each data source MUX outputs both a true and a negated version of its output. All of these eight signals are enabled, ORed together by the logic cell input gates. If no inputs are selected (CLCxGLS = 0x00), the output will be zero or one, depending on the GxPOL bits.

REGISTER 21-1: CLCxCONL: CLCx CONTROL REGISTER (LOW)

R/W-0	U-0	U-0	U-0	R/W-0	R/W-0	U-0	U-0
LCEN	—	—	—	INTP	INTN	—	—
bit 15							bit 8

R-0	R-0	R/W-0	U-0	U-0	R/W-0	R/W-0	R/W-0
LCOE	LCOUT	LCPOL	—	—	MODE2	MODE1	MODE0
bit 7							bit 0

Legend:			
R = Readable bit	W = Writable bit	U = Unimplemented bit, read as ‘0’	
-n = Value at POR	‘1’ = Bit is set	‘0’ = Bit is cleared	x = Bit is unknown

bit 15 **LCEN:** CLCx Enable bit
1 = CLCx is enabled and mixing input signals
0 = CLCx is disabled and has logic zero outputs

bit 14-12 **Unimplemented:** Read as ‘0’

bit 11 **INTP:** CLCx Positive Edge Interrupt Enable bit
1 = Interrupt will be generated when a rising edge occurs on LCOUT
0 = Interrupt will not be generated

bit 10 **INTN:** CLCx Negative Edge Interrupt Enable bit
1 = Interrupt will be generated when a falling edge occurs on LCOUT
0 = Interrupt will not be generated

bit 9-8 **Unimplemented:** Read as ‘0’

bit 7 **LCOE:** CLCx Port Enable bit
1 = CLCx port pin output is enabled
0 = CLCx port pin output is disabled

bit 6 **LCOUT:** CLCx Data Output Status bit
1 = CLCx output high
0 = CLCx output low

bit 5 **LCPOL:** CLCx Output Polarity Control bit
1 = The output of the module is inverted
0 = The output of the module is not inverted

bit 4-3 **Unimplemented:** Read as ‘0’

© 2018-2019 Microchip Technology Inc.

REGISTER 21-1: CLCxCONL: CLCx CONTROL REGISTER (LOW) (CONTINUED)

bit 2-0 **MODE[2:0]:** CLCx Mode bits
111 = Single input transparent latch with S and R
110 = JK flip-flop with R
101 = Two-input D flip-flop with R
100 = Single input D flip-flop with S and R
011 = SR latch
010 = Four-input AND
001 = Four-input OR-XOR
000 = Four-input AND-OR

REGISTER 21-2: CLCxCONH: CLCx CONTROL REGISTER (HIGH)

U-0	U-0	U-0	U-0	U-0	U-0	U-0	U-0
—	—	—	—	—	—	—	—
bit 15							bit 8

U-0	U-0	U-0	U-0	R/W-0	R/W-0	R/W-0	R/W-0
—	—	—	—	G4POL	G3POL	G2POL	G1POL
bit 7							bit 0

Legend:			
R = Readable bit	W = Writable bit	U = Unimplemented bit, read as ‘0’	
-n = Value at POR	‘1’ = Bit is set	‘0’ = Bit is cleared	x = Bit is unknown

bit 15-4 **Unimplemented:** Read as ‘0’

bit 3 **G4POL:** Gate 4 Polarity Control bit
1 = Channel 4 logic output is inverted when applied to the logic cell
0 = Channel 4 logic output is not inverted

bit 2 **G3POL:** Gate 3 Polarity Control bit
1 = Channel 3 logic output is inverted when applied to the logic cell
0 = Channel 3 logic output is not inverted

bit 1 **G2POL:** Gate 2 Polarity Control bit
1 = Channel 2 logic output is inverted when applied to the logic cell
0 = Channel 2 logic output is not inverted

bit 0 **G1POL:** Gate 1 Polarity Control bit
1 = Channel 1 logic output is inverted when applied to the logic cell
0 = Channel 1 logic output is not inverted

REGISTER 21-3: CLCxSEL: CLCx INPUT MUX SELECT REGISTER

U-0	R/W-0	R/W-0	R/W-0	U-0	R/W-0	R/W-0	R/W-0
—	DS4[2:0]			—	DS3[2:0]		
bit 15							bit 8

U-0	R/W-0	R/W-0	R/W-0	U-0	R/W-0	R/W-0	R/W-0
—	DS2[2:0]			—	DS1[2:0]		
bit 7							bit 0

Legend:			
R = Readable bit	W = Writable bit	U = Unimplemented bit, read as ‘0’	
-n = Value at POR	‘1’ = Bit is set	‘0’ = Bit is cleared	x = Bit is unknown

bit 15 **Unimplemented:** Read as ‘0’

bit 14-12 **DS4[2:0]:** Data Selection MUX 4 Signal Selection bits
111 = SCCP3 auxiliary out
110 = SCCP1 auxiliary out
101 = CLCIND pin
100 = Reserved
011 = SPI1 Input (SDIx)(1)
010 = Comparator 3 output
001 = CLC2 output
000 = PWM Event A

bit 11 **Unimplemented:** Read as ‘0’

bit 10-8 **DS3[2:0]:** Data Selection MUX 3 Signal Selection bits
111 = SCCP4 Compare Event Flag (CCP4IF)
110 = SCCP3 Compare Event Flag (CCP3IF)
101 = CLC4 out
100 = UART1 RX output corresponding to CLCx module
011 = SPI1 Output (SDOx) corresponding to CLCx module(1)
010 = Comparator 2 output
001 = CLC1 output
000 = CLCINC I/O pin

bit 7 **Unimplemented:** Read as ‘0’

bit 6-4 **DS2[2:0]:** Data Selection MUX 2 Signal Selection bits
111 = SCCP2 OC (CCP2IF) out
110 = SCCP1 OC (CCP1IF) out
101 = Reserved
100 = Reserved
011 = UART1 TX input corresponding to CLCx module
010 = Comparator 1 output
001 = Reserved
000 = CLCINB I/O pin

bit 3 **Unimplemented:** Read as ‘0’

Note 1: Valid only when SPI is used on PPS.

© 2018-2019 Microchip Technology Inc.

REGISTER 21-3: CLCxSEL: CLCx INPUT MUX SELECT REGISTER (CONTINUED)

bit 2-0 **DS1[2:0]:** Data Selection MUX 1 Signal Selection bits
111 = SCCP4 auxiliary out
110 = SCCP2 auxiliary out
101 = Reserved
100 = REFCLKO output
011 = INTRC/LPRC clock source
010 = CLC3 out
001 = System clock (FCY)
000 = CLCINA I/O pin

Note 1: Valid only when SPI is used on PPS.

REGISTER 21-4: CLCxGLSL: CLCx GATE LOGIC INPUT SELECT LOW REGISTER

R/W-0	R/W-0	R/W-0	R/W-0	R/W-0	R/W-0	R/W-0	R/W-0
G2D4T	G2D4N	G2D3T	G2D3N	G2D2T	G2D2N	G2D1T	G2D1N
bit 15							bit 8

R/W-0	R/W-0	R/W-0	R/W-0	R/W-0	R/W-0	R/W-0	R/W-0
G1D4T	G1D4N	G1D3T	G1D3N	G1D2T	G1D2N	G1D1T	G1D1N
bit 7							bit 0

Legend:			
R = Readable bit	W = Writable bit	U = Unimplemented bit, read as ‘0’	
-n = Value at POR	‘1’ = Bit is set	‘0’ = Bit is cleared	x = Bit is unknown

bit 15 **G2D4T:** Gate 2 Data Source 4 True Enable bit
1 = Data Source 4 signal is enabled for Gate 2
0 = Data Source 4 signal is disabled for Gate 2

bit 14 **G2D4N:** Gate 2 Data Source 4 Negated Enable bit
1 = Data Source 4 inverted signal is enabled for Gate 2
0 = Data Source 4 inverted signal is disabled for Gate 2

bit 13 **G2D3T:** Gate 2 Data Source 3 True Enable bit
1 = Data Source 3 signal is enabled for Gate 2
0 = Data Source 3 signal is disabled for Gate 2

bit 12 **G2D3N:** Gate 2 Data Source 3 Negated Enable bit
1 = Data Source 3 inverted signal is enabled for Gate 2
0 = Data Source 3 inverted signal is disabled for Gate 2

bit 11 **G2D2T:** Gate 2 Data Source 2 True Enable bit
1 = Data Source 2 signal is enabled for Gate 2
0 = Data Source 2 signal is disabled for Gate 2

bit 10 **G2D2N:** Gate 2 Data Source 2 Negated Enable bit
1 = Data Source 2 inverted signal is enabled for Gate 2
0 = Data Source 2 inverted signal is disabled for Gate 2

bit 9 **G2D1T:** Gate 2 Data Source 1 True Enable bit
1 = Data Source 1 signal is enabled for Gate 2
0 = Data Source 1 signal is disabled for Gate 2

bit 8 **G2D1N:** Gate 2 Data Source 1 Negated Enable bit
1 = Data Source 1 inverted signal is enabled for Gate 2
0 = Data Source 1 inverted signal is disabled for Gate 2

bit 7 **G1D4T:** Gate 1 Data Source 4 True Enable bit
1 = Data Source 4 signal is enabled for Gate 1
0 = Data Source 4 signal is disabled for Gate 1

bit 6 **G1D4N:** Gate 1 Data Source 4 Negated Enable bit
1 = Data Source 4 inverted signal is enabled for Gate 1
0 = Data Source 4 inverted signal is disabled for Gate 1

bit 5 **G1D3T:** Gate 1 Data Source 3 True Enable bit
1 = Data Source 3 signal is enabled for Gate 1
0 = Data Source 3 signal is disabled for Gate 1

bit 4 **G1D3N:** Gate 1 Data Source 3 Negated Enable bit
1 = Data Source 3 inverted signal is enabled for Gate 1
0 = Data Source 3 inverted signal is disabled for Gate 1

© 2018-2019 Microchip Technology Inc.

REGISTER 21-4: CLCxGLSL: CLCx GATE LOGIC INPUT SELECT LOW REGISTER (CONTINUED)

bit 3 **G1D2T:** Gate 1 Data Source 2 True Enable bit
1 = Data Source 2 signal is enabled for Gate 1
0 = Data Source 2 signal is disabled for Gate 1

bit 2 **G1D2N:** Gate 1 Data Source 2 Negated Enable bit
1 = Data Source 2 inverted signal is enabled for Gate 1
0 = Data Source 2 inverted signal is disabled for Gate 1

bit 1 **G1D1T:** Gate 1 Data Source 1 True Enable bit
1 = Data Source 1 signal is enabled for Gate 1
0 = Data Source 1 signal is disabled for Gate 1

bit 0 **G1D1N:** Gate 1 Data Source 1 Negated Enable bit
1 = Data Source 1 inverted signal is enabled for Gate 1
0 = Data Source 1 inverted signal is disabled for Gate 1

REGISTER 21-5: CLCxGLSH: CLCx GATE LOGIC INPUT SELECT HIGH REGISTER

R/W-0	R/W-0	R/W-0	R/W-0	R/W-0	R/W-0	R/W-0	R/W-0
G4D4T	G4D4N	G4D3T	G4D3N	G4D2T	G4D2N	G4D1T	G4D1N
bit 15							bit 8

R/W-0	R/W-0	R/W-0	R/W-0	R/W-0	R/W-0	R/W-0	R/W-0
G3D4T	G3D4N	G3D3T	G3D3N	G3D2T	G3D2N	G3D1T	G3D1N
bit 7							bit 0

Legend:			
R = Readable bit	W = Writable bit	U = Unimplemented bit, read as ‘0’	
-n = Value at POR	‘1’ = Bit is set	‘0’ = Bit is cleared	x = Bit is unknown

bit 15 **G4D4T:** Gate 4 Data Source 4 True Enable bit
1 = Data Source 4 signal is enabled for Gate 4
0 = Data Source 4 signal is disabled for Gate 4

bit 14 **G4D4N:** Gate 4 Data Source 4 Negated Enable bit
1 = Data Source 4 inverted signal is enabled for Gate 4
0 = Data Source 4 inverted signal is disabled for Gate 4

bit 13 **G4D3T:** Gate 4 Data Source 3 True Enable bit
1 = Data Source 3 signal is enabled for Gate 4
0 = Data Source 3 signal is disabled for Gate 4

bit 12 **G4D3N:** Gate 4 Data Source 3 Negated Enable bit
1 = Data Source 3 inverted signal is enabled for Gate 4
0 = Data Source 3 inverted signal is disabled for Gate 4

bit 11 **G4D2T:** Gate 4 Data Source 2 True Enable bit
1 = Data Source 2 signal is enabled for Gate 4
0 = Data Source 2 signal is disabled for Gate 4

bit 10 **G4D2N:** Gate 4 Data Source 2 Negated Enable bit
1 = Data Source 2 inverted signal is enabled for Gate 4
0 = Data Source 2 inverted signal is disabled for Gate 4

bit 9 **G4D1T:** Gate 4 Data Source 1 True Enable bit
1 = Data Source 1 signal is enabled for Gate 4
0 = Data Source 1 signal is disabled for Gate 4

bit 8 **G4D1N:** Gate 4 Data Source 1 Negated Enable bit
1 = Data Source 1 inverted signal is enabled for Gate 4
0 = Data Source 1 inverted signal is disabled for Gate 4

bit 7 **G3D4T:** Gate 3 Data Source 4 True Enable bit
1 = Data Source 4 signal is enabled for Gate 3
0 = Data Source 4 signal is disabled for Gate 3

bit 6 **G3D4N:** Gate 3 Data Source 4 Negated Enable bit
1 = Data Source 4 inverted signal is enabled for Gate 3
0 = Data Source 4 inverted signal is disabled for Gate 3

bit 5 **G3D3T:** Gate 3 Data Source 3 True Enable bit
1 = Data Source 3 signal is enabled for Gate 3
0 = Data Source 3 signal is disabled for Gate 3

bit 4 **G3D3N:** Gate 3 Data Source 3 Negated Enable bit
1 = Data Source 3 inverted signal is enabled for Gate 3
0 = Data Source 3 inverted signal is disabled for Gate 3

© 2018-2019 Microchip Technology Inc.

REGISTER 21-5: CLCxGLSH: CLCx GATE LOGIC INPUT SELECT HIGH REGISTER (CONTINUED)

bit 3 **G3D2T:** Gate 3 Data Source 2 True Enable bit
1 = Data Source 2 signal is enabled for Gate 3
0 = Data Source 2 signal is disabled for Gate 3

bit 2 **G3D2N:** Gate 3 Data Source 2 Negated Enable bit
1 = Data Source 2 inverted signal is enabled for Gate 3
0 = Data Source 2 inverted signal is disabled for Gate 3

bit 1 **G3D1T:** Gate 3 Data Source 1 True Enable bit
1 = Data Source 1 signal is enabled for Gate 3
0 = Data Source 1 signal is disabled for Gate 3

bit 0 **G3D1N:** Gate 3 Data Source 1 Negated Enable bit
1 = Data Source 1 inverted signal is enabled for Gate 3
0 = Data Source 1 inverted signal is disabled for Gate 3

NOTES:

© 2018-2019 Microchip Technology Inc.

22.0 PERIPHERAL TRIGGER GENERATOR (PTG)

Note 1: This data sheet summarizes the features of the dsPIC33CK64MP105 family of devices. It is not intended to be a comprehensive reference source. To complement the information in this data sheet, refer to **"Peripheral Trigger Generator (PTG)"** (www.microchip.com/DS70000669) in the *"dsPIC33/PIC24 Family Reference Manual"*.

The dsPIC33CK64MP105 family Peripheral Trigger Generator (PTG) module is a user-programmable sequencer that is capable of generating complex trigger signal sequences to coordinate the operation of other peripherals. The PTG module is designed to interface with the modules, such as an Analog-to-Digital Converter (ADC), output compare and PWM modules, timers and interrupt controllers.

22.1 Features

- Behavior is Step Command Driven:
  - Step commands are eight bits wide
- Commands are Stored in a Step Queue:
  - Queue depth is up to 32 entries
  - Programmable Step execution time (Step delay)
- Supports the Command Sequence Loop:
  - Can be nested one-level deep
  - Conditional or unconditional loop
  - Two 16-bit loop counters
- 15 Hardware Input Triggers:
  - Sensitive to either positive or negative edges, or a high or low level
- One Software Input Trigger
- Generates up to 32 Unique Output Trigger Signals
- Generates Two Types of Trigger Outputs:
  - Individual
  - Broadcast
- Generates up to Ten Unique Interrupt Signals
- Two 16-Bit General Purpose Timers
- Flexible Self-Contained Watchdog Timer (WDT) to Set an Upper Limit to Trigger Wait Time
- Single-Step Command Capability in Debug mode
- Selectable Clock (System, Pulse-Width Modulator (PWM) or ADC)
- Programmable Clock Divider

FIGURE 22-1: PTG BLOCK DIAGRAM

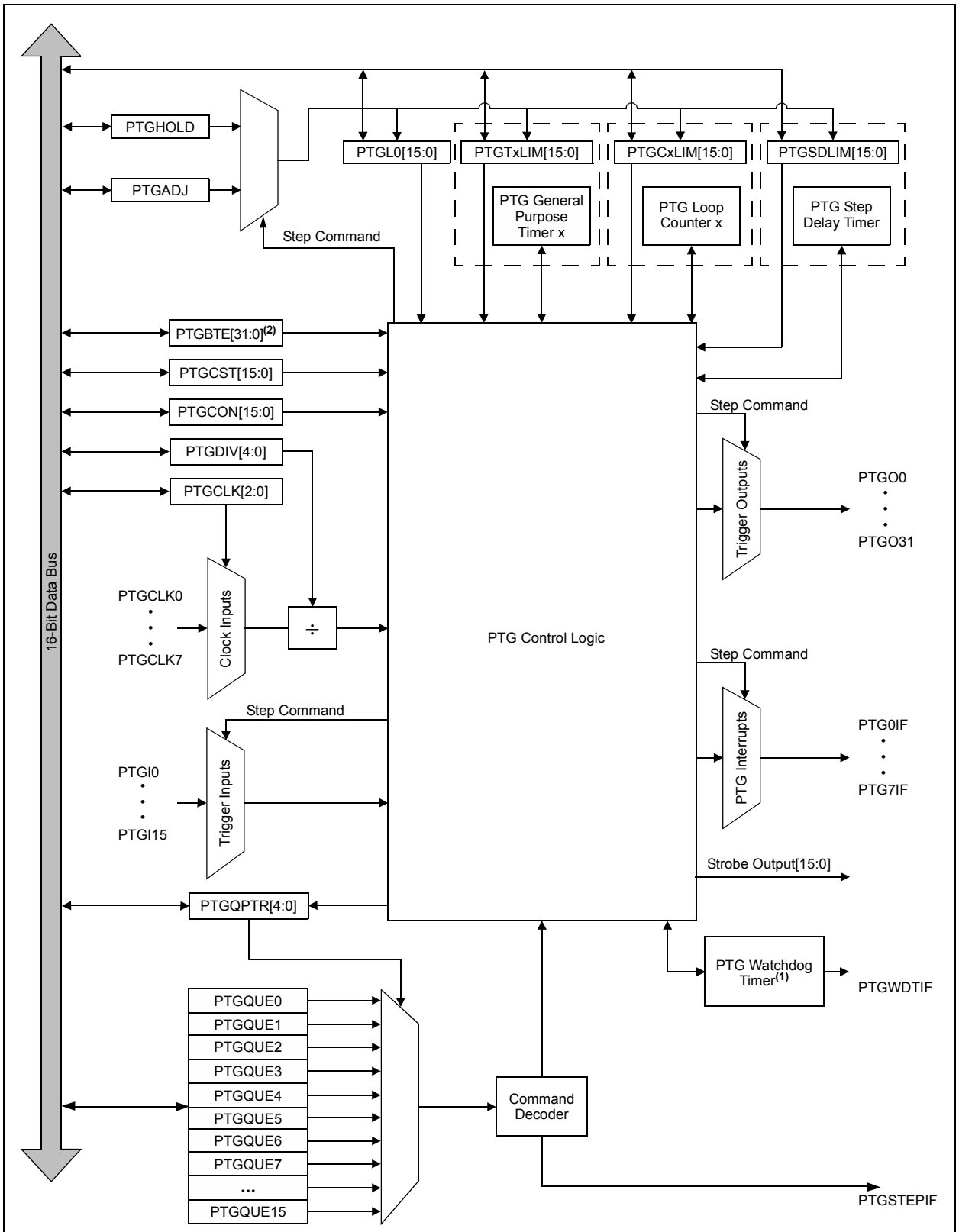

Note 1: This is a dedicated Watchdog Timer for the PTG module and is independent of the device Watchdog Timer.

2: Some devices support only PTGBTE[15:0] (16 outputs).

© 2018-2019 Microchip Technology Inc.

22.2 PTG Control/Status Registers

REGISTER 22-1: PTGCST: PTG CONTROL/STATUS LOW REGISTER

R/W-0	U-0	R/W-0	R/W-0	U-0	HC/R/W-0	R/W-0	R/W-0
PTGEN	—	PTGSIDL	PTGTOGL	—	PTGSWT(2)	PTGSSEN(3)	PTGIVIS
bit 15							bit 8

HC/R/W-0	HS/R/W-0	HS/HC/R/W-0	U-0	U-0	U-0	R/W-0	R/W-0
PTGSTRT	PTGWDTO	PTGBUSY	—	—	—	PTGITM1(1)	PTGITM0(1)
bit 7							bit 0

Legend:	HC = Hardware Clearable bit	HS = Hardware Settable bit	
R = Readable bit	W = Writable bit	U = Unimplemented bit, read as ‘0’	
-n = Value at POR	‘1’ = Bit is set	‘0’ = Bit is cleared	x = Bit is unknown

bit 15 **PTGEN:** PTG Enable bit
1 = PTG is enabled
0 = PTG is disabled

bit 14 **Unimplemented:** Read as ‘0’

bit 13 **PTGSIDL:** PTG Freeze in Debug Mode bit
1 = Halts PTG operation when device is Idle
0 = PTG operation continues when device is Idle

bit 12 **PTGTOGL:** PTG Toggle Trigger Output bit
1 = Toggles state of TRIG output for each execution of PTGTRIG
0 = Generates a single TRIG pulse for each execution of PTGTRIG

bit 11 **Unimplemented:** Read as ‘0’

bit 10 **PTGSWT:** PTG Software Trigger bit(2)
1 = Toggles state of TRIG output for each execution of PTGTRIG
0 = Generates a single TRIG pulse for each execution of PTGTRIG

bit 9 **PTGSSEN:** PTG Single-Step Command bit(3)
1 = Enables single step when in Debug mode
0 = Disables single step

bit 8 **PTGIVIS:** PTG Counter/Timer Visibility bit
1 = Reading the PTGSDLIM, PTGCxLIM or PTGTxLIM registers returns the current values of their corresponding Counter/Timer registers (PTGSDLIM, PTGCxLIM and PTGTxLIM)
0 = Reading the PTGSDLIM, PTGCxLIM or PTGTxLIM registers returns the value of these Limit registers

bit 7 **PTGSTRT:** PTG Start Sequencer bit
1 = Starts to sequentially execute the commands (Continuous mode)
0 = Stops executing the commands

bit 6 **PTGWDTO:** PTG Watchdog Timer Time-out Status bit
1 = PTG Watchdog Timer has timed out
0 = PTG Watchdog Timer has not timed out

bit 5 **PTGBUSY:** PTG State Machine Busy bit
1 = PTG is running on the selected clock source; no SFR writes are allowed to PTGCLK[2:0] or PTGDIV[4:0]
0 = PTG state machine is not running

Note 1: These bits apply to the PTGWHI and PTGWLO commands only.
2: This bit is only used with the PTGCTRL Step command software trigger option.
3: The PTGSSEN bit may only be written when in Debug mode.

REGISTER 22-1: PTGCST: PTG CONTROL/STATUS LOW REGISTER (CONTINUED)

bit 4-2 **Unimplemented:** Read as '0'

bit 1-0 **PTGITM[1:0]:** PTG Input Trigger Operation Selection bit(1)

11 = Single-level detect with Step delay not executed on exit of command (regardless of the PTGCTRL command) (Mode 3)

10 = Single-level detect with Step delay executed on exit of command (Mode 2)

01 = Continuous edge detect with Step delay not executed on exit of command (regardless of the PTGCTRL command) (Mode 1)

00 = Continuous edge detect with Step delay executed on exit of command (Mode 0)

Note 1: These bits apply to the PTGWHI and PTGWLO commands only.

2: This bit is only used with the PTGCTRL Step command software trigger option.

3: The PTGSSEN bit may only be written when in Debug mode.

© 2018-2019 Microchip Technology Inc.

REGISTER 22-2: PTGCON: PTG CONTROL/STATUS HIGH REGISTER

R/W-0	R/W-0	R/W-0	R/W-0	R/W-0	R/W-0	R/W-0	R/W-0
PTGCLK2	PTGCLK1	PTGCLK0	PTGDIV4	PTGDIV3	PTGDIV2	PTGDIV1	PTGDIV0
bit 15							bit 8

R/W-0	R/W-0	R/W-0	R/W-0	U-0	R/W-0	R/W-0	R/W-0
PTGPWD3	PTGPWD2	PTGPWD1	PTGPWD0	—	PTGWDT2	PTGWDT1	PTGWDT0
bit 7							bit 0

Legend:			
R = Readable bit	W = Writable bit	U = Unimplemented bit, read as ‘0’	
-n = Value at POR	‘1’ = Bit is set	‘0’ = Bit is cleared	x = Bit is unknown

bit 15-13 **PTGCLK[2:0]:** PTG Module Clock Source Selection bits
111 = CLC1
110 = PLL VCO DIV 4 output
101 = Reserved
100 = Reserved
011 = Input from Timer1 Clock pin, T1CK
010 = PTG module clock source will be ADC clock
001 = PTG module clock source will be FOSC
000 = PTG module clock source will be FOSC/2 (FP)

bit 12-8 **PTGDIV[4:0]:** PTG Module Clock Prescaler (Divider) bits
11111 = Divide-by-32
11110 = Divide-by-31
...
00001 = Divide-by-2
00000 = Divide-by-1

bit 7-4 **PTGPWD[3:0]:** PTG Trigger Output Pulse-Width (in PTG clock cycles) bits
1111 = All trigger outputs are 16 PTG clock cycles wide
1110 = All trigger outputs are 15 PTG clock cycles wide
...
0001 = All trigger outputs are 2 PTG clock cycles wide
0000 = All trigger outputs are 1 PTG clock cycle wide

bit 3 **Unimplemented:** Read as ‘0’

bit 2-0 **PTGWDT[2:0]:** PTG Watchdog Timer Time-out Selection bits
111 = Watchdog Timer will time out after 512 PTG clocks
110 = Watchdog Timer will time out after 256 PTG clocks
101 = Watchdog Timer will time out after 128 PTG clocks
100 = Watchdog Timer will time out after 64 PTG clocks
011 = Watchdog Timer will time out after 32 PTG clocks
010 = Watchdog Timer will time out after 16 PTG clocks
001 = Watchdog Timer will time out after 8 PTG clocks
000 = Watchdog Timer is disabled

REGISTER 22-3: PTGBTE: PTG BROADCAST TRIGGER ENABLE LOW REGISTER(1)

R/W-0	R/W-0	R/W-0	R/W-0	R/W-0	R/W-0	R/W-0	R/W-0
PTGBTE[15:8]							
bit 15							bit 8

R/W-0	R/W-0	R/W-0	R/W-0	R/W-0	R/W-0	R/W-0	R/W-0
PTGBTE[7:0]							
bit 7							bit 0

Legend:			
R = Readable bit	W = Writable bit	U = Unimplemented bit, read as ‘0’	
-n = Value at POR	‘1’ = Bit is set	‘0’ = Bit is cleared	x = Bit is unknown

bit 15-0 **PTGBTE[15:0]:** PTG Broadcast Trigger Enable bits
1 = Generates trigger when the broadcast command is executed
0 = Does not generate trigger when the broadcast command is executed

Note 1: These bits are read-only when the module is executing Step commands.

REGISTER 22-4: PTGBTEH: PTG BROADCAST TRIGGER ENABLE HIGH REGISTER(1)

R/W-0	R/W-0	R/W-0	R/W-0	R/W-0	R/W-0	R/W-0	R/W-0
PTGBTE[31:24]							
bit 15							bit 8

R/W-0	R/W-0	R/W-0	R/W-0	R/W-0	R/W-0	R/W-0	R/W-0
PTGBTE[23:16]							
bit 7							bit 0

Legend:			
R = Readable bit	W = Writable bit	U = Unimplemented bit, read as ‘0’	
-n = Value at POR	‘1’ = Bit is set	‘0’ = Bit is cleared	x = Bit is unknown

bit 15-0 **PTGBTE[31:16]:** PTG Broadcast Trigger Enable bits
1 = Generates trigger when the broadcast command is executed
0 = Does not generate trigger when the broadcast command is executed

Note 1: These bits are read-only when the module is executing Step commands.

© 2018-2019 Microchip Technology Inc.

REGISTER 22-5: PTGHOLD: PTG HOLD REGISTER(1)

R/W-0	R/W-0	R/W-0	R/W-0	R/W-0	R/W-0	R/W-0	R/W-0
PTGHOLD[15:8]							
bit 15							bit 8

R/W-0	R/W-0	R/W-0	R/W-0	R/W-0	R/W-0	R/W-0	R/W-0
PTGHOLD[7:0]							
bit 7							bit 0

Legend:			
R = Readable bit	W = Writable bit	U = Unimplemented bit, read as ‘0’	
-n = Value at POR	‘1’ = Bit is set	‘0’ = Bit is cleared	x = Bit is unknown

bit 15-0 **PTGHOLD[15:0]:** PTG General Purpose Hold Register bits
This register holds the user-supplied data to be copied to the PTGTxLIM, PTGCxLIM, PTGSDLIM or PTGL0 register using the `PTGCOPY` command.

Note 1: These bits are read-only when the module is executing Step commands.

REGISTER 22-6: PTGT0LIM: PTG TIMER0 LIMIT REGISTER(1)

R/W-0	R/W-0	R/W-0	R/W-0	R/W-0	R/W-0	R/W-0	R/W-0
PTGT0LIM[15:8]							
bit 15							bit 8

R/W-0	R/W-0	R/W-0	R/W-0	R/W-0	R/W-0	R/W-0	R/W-0
PTGT0LIM[7:0]							
bit 7							bit 0

Legend:			
R = Readable bit	W = Writable bit	U = Unimplemented bit, read as ‘0’	
-n = Value at POR	‘1’ = Bit is set	‘0’ = Bit is cleared	x = Bit is unknown

bit 15-0 **PTGT0LIM[15:0]:** PTG Timer0 Limit Register bits
General Purpose Timer0 Limit register.

Note 1: These bits are read-only when the module is executing Step commands.

REGISTER 22-7: PTGT1LIM: PTG TIMER1 LIMIT REGISTER(1)

R/W-0	R/W-0	R/W-0	R/W-0	R/W-0	R/W-0	R/W-0	R/W-0
PTGT1LIM[15:8]							
bit 15							bit 8

R/W-0	R/W-0	R/W-0	R/W-0	R/W-0	R/W-0	R/W-0	R/W-0
PTGT1LIM[7:0]							
bit 7							bit 0

Legend:			
R = Readable bit	W = Writable bit	U = Unimplemented bit, read as ‘0’	
-n = Value at POR	‘1’ = Bit is set	‘0’ = Bit is cleared	x = Bit is unknown

bit 15-0 **PTGT1LIM[15:0]:** PTG Timer1 Limit Register bits
General Purpose Timer1 Limit register.

Note 1: These bits are read-only when the module is executing Step commands.

REGISTER 22-8: PTGSDLIM: PTG STEP DELAY LIMIT REGISTER(1)

R/W-0	R/W-0	R/W-0	R/W-0	R/W-0	R/W-0	R/W-0	R/W-0
PTGSDLIM[15:8]							
bit 15							bit 8

R/W-0	R/W-0	R/W-0	R/W-0	R/W-0	R/W-0	R/W-0	R/W-0
PTGSDLIM[7:0]							
bit 7							bit 0

Legend:			
R = Readable bit	W = Writable bit	U = Unimplemented bit, read as ‘0’	
-n = Value at POR	‘1’ = Bit is set	‘0’ = Bit is cleared	x = Bit is unknown

bit 15-0 **PTGSDLIM[15:0]:** PTG Step Delay Limit Register bits
This register holds a PTG Step delay value representing the number of additional PTG clocks between the start of a Step command and the completion of a Step command.

Note 1: These bits are read-only when the module is executing Step commands.

© 2018-2019 Microchip Technology Inc.

REGISTER 22-9: PTGC0LIM: PTG COUNTER 0 LIMIT REGISTER(1)

R/W-0	R/W-0	R/W-0	R/W-0	R/W-0	R/W-0	R/W-0	R/W-0
PTGC0LIM[15:8]							
bit 15							bit 8

R/W-0	R/W-0	R/W-0	R/W-0	R/W-0	R/W-0	R/W-0	R/W-0
PTGC0LIM[7:0]							
bit 7							bit 0

Legend:			
R = Readable bit	W = Writable bit	U = Unimplemented bit, read as ‘0’	
-n = Value at POR	‘1’ = Bit is set	‘0’ = Bit is cleared	x = Bit is unknown

bit 15-0 **PTGC0LIM[15:0]:** PTG Counter 0 Limit Register bits
This register is used to specify the loop count for the `PTGJMPC0` Step command or as a Limit register for the General Purpose Counter 0.

Note 1: These bits are read-only when the module is executing Step commands.

REGISTER 22-10: PTGC1LIM: PTG COUNTER 1 LIMIT REGISTER(1)

R/W-0	R/W-0	R/W-0	R/W-0	R/W-0	R/W-0	R/W-0	R/W-0
PTGC1LIM[15:8]							
bit 15							bit 8

R/W-0	R/W-0	R/W-0	R/W-0	R/W-0	R/W-0	R/W-0	R/W-0
PTGC1LIM[7:0]							
bit 7							bit 0

Legend:			
R = Readable bit	W = Writable bit	U = Unimplemented bit, read as ‘0’	
-n = Value at POR	‘1’ = Bit is set	‘0’ = Bit is cleared	x = Bit is unknown

bit 15-0 **PTGC1LIM[15:0]:** PTG Counter 1 Limit Register bits
This register is used to specify the loop count for the `PTGJMPC1` Step command or as a Limit register for the General Purpose Counter 1.

Note 1: These bits are read-only when the module is executing Step commands.

REGISTER 22-11: PTGADJ: PTG ADJUST REGISTER(1)

R/W-0	R/W-0	R/W-0	R/W-0	R/W-0	R/W-0	R/W-0	R/W-0
PTGADJ[15:8]							
bit 15							bit 8

R/W-0	R/W-0	R/W-0	R/W-0	R/W-0	R/W-0	R/W-0	R/W-0
PTGADJ[7:0]							
bit 7							bit 0

Legend:			
R = Readable bit	W = Writable bit	U = Unimplemented bit, read as ‘0’	
-n = Value at POR	‘1’ = Bit is set	‘0’ = Bit is cleared	x = Bit is unknown

bit 15-0 **PTGADJ[15:0]:** PTG Adjust Register bits
This register holds the user-supplied data to be added to the PTGTxLIM, PTGCxLIM, PTGSDLIM or PTGL0 register using the `PTGADD` command.

Note 1: These bits are read-only when the module is executing Step commands.

REGISTER 22-12: PTGL0: PTG LITERAL 0 REGISTER(1)

R/W-0	R/W-0	R/W-0	R/W-0	R/W-0	R/W-0	R/W-0	R/W-0
PTGL0[15:8]							
bit 15							bit 8

R/W-0	R/W-0	R/W-0	R/W-0	R/W-0	R/W-0	R/W-0	R/W-0
PTGL0[7:0]							
bit 7							bit 0

Legend:			
R = Readable bit	W = Writable bit	U = Unimplemented bit, read as ‘0’	
-n = Value at POR	‘1’ = Bit is set	‘0’ = Bit is cleared	x = Bit is unknown

bit 15-0 **PTGL0[15:0]:** PTG Literal 0 Register bits

Note 1: These bits are read-only when the module is executing Step commands.

© 2018-2019 Microchip Technology Inc.

REGISTER 22-13: PTGQPTR: PTG STEP QUEUE POINTER REGISTER(1)

U-0	U-0	U-0	U-0	U-0	U-0	U-0	U-0
—	—	—	—	—	—	—	—
bit 15							bit 8

U-0	U-0	U-0	R/W-0	R/W-0	R/W-0	R/W-0	R/W-0
—	—	—	PTGQPTR[4:0]				
bit 7							bit 0

Legend:			
R = Readable bit	W = Writable bit	U = Unimplemented bit, read as ‘0’	
-n = Value at POR	‘1’ = Bit is set	‘0’ = Bit is cleared	x = Bit is unknown

bit 15-5 **Unimplemented:** Read as ‘0’

bit 4-0 **PTGQPTR[4:0]:** PTG Step Queue Pointer Register bits
This register points to the currently active Step command in the Step queue.

Note 1: These bits are read-only when the module is executing Step commands.

REGISTER 22-14: PTGQUEn: PTG STEP QUEUE n POINTER REGISTER (n = 0-15)(1)

R/W-0	R/W-0	R/W-0	R/W-0	R/W-0	R/W-0	R/W-0	R/W-0
STEP2n+1[7:0](2)							
bit 15							bit 8

R/W-0	R/W-0	R/W-0	R/W-0	R/W-0	R/W-0	R/W-0	R/W-0
STEP2n[7:0](2)							
bit 7							bit 0

Legend:			
R = Readable bit	W = Writable bit	U = Unimplemented bit, read as ‘0’	
-n = Value at POR	‘1’ = Bit is set	‘0’ = Bit is cleared	x = Bit is unknown

bit 15-8 **STEP2n+1[7:0]:** PTG Command 4n+1 bits(2)
A queue location for storage of the STEP2n+1 command byte, where ‘n’ is from PTGQUEn.

bit **STEP2n[7:0]:** PTG Command 4n+2 bits(2)
A queue location for storage of the STEP2n command byte, where ‘n’ are the odd numbered Step Queue Pointers.

Note 1: These bits are read-only when the module is executing Step commands.
2: Refer to Table 22-1 for the Step command encoding.

TABLE 22-1: PTG STEP COMMAND FORMAT AND DESCRIPTION

Step Command Byte			
STEPx[7:0]			
CMD[3:0]		OPTION[3:0]	
bit 7	bit 4	bit 3	bit 0

bit 7-4	Step Command	CMD[3:0]	Command Description
	PTGCTRL	0000	Execute the control command as described by the OPTION[3:0] bits.
	PTGADD	0001	Add contents of the PTGADJ register to the target register as described by the OPTION[3:0] bits.
	PTGCOPY		Copy contents of the PTGHOLD register to the target register as described by the OPTION[3:0] bits.
	PTGSTRB	001x	This command starts an ADC conversion of the channels specified in CMD[0] and OPTION[3:0] bits.
	PTGWHI	0100	Wait for a low-to-high edge input from a selected PTG trigger input as described by the OPTION[3:0] bits.
	PTGWLO	0101	Wait for a high-to-low edge input from a selected PTG trigger input as described by the OPTION[3:0] bits.
	—	0110	Reserved; do not use.(1)
	PTGIRQ	0111	Generate individual interrupt request as described by the OPTION[3:0] bits.
	PTGTRIG	100x	Generate individual trigger output as described by the bits, CMD[0]:OPTION[3:0].
	PTGJMP	101x	Copy the values contained in the bits, CMD[0]:OPTION[3:0], to the PTGQPTR register and jump to that Step queue.
	PTGJMPC0	110x	PTGC0 = PTGC0LIM: Increment the PTGQPTR register.
			PTGC0 ≠ PTGC0LIM: Increment Counter 0 (PTGC0) and copy the values contained in the bits, CMD[0]:OPTION[3:0], to the PTGQPTR register, and jump to that Step queue.
	PTGJMPC1	111x	PTGC1 = PTGC1LIM: Increment the PTGQPTR register.
			PTGC1 ≠ PTGC1LIM: Increment Counter 1 (PTGC1) and copy the values contained in the bits, CMD[0]:OPTION[3:0], to the PTGQPTR register, and jump to that Step queue.

Note 1: All reserved commands or options will execute, but they do not have any affect (i.e., execute as a `NOP` instruction).

© 2018-2019 Microchip Technology Inc.

TABLE 22-2: PTG COMMAND OPTIONS

bit 3-0	Step Command	OPTION[3:0]	Command Description
	PTGCTRL(1)	0000	NOP.
		0001	Reserved; do not use.
		0010	Disable Step delay timer (PTGSD).
		0011	Reserved; do not use.
		0100	Reserved; do not use.
		0101	Reserved; do not use.
		0110	Enable Step delay timer (PTGSD).
		0111	Reserved; do not use.
		1000	Start and wait for the PTG Timer0 to match the PTGT0LIM register.
		1001	Start and wait for the PTG Timer1 to match the PTGT1LIM register.
		1010	Wait for the software trigger (level, PTGSWT = 1).
		1011	Wait for the software trigger (positive edge, PTGSWT = 0 to 1).
		1100	Copy the PTGC0LIM register contents to the strobe output.
		1101	Copy the PTGC1LIM register contents to the strobe output.
		1110	Reserved; do not use.
		1111	Generate the triggers indicated in the PTGBTE register.
	PTGADD(1)	0000	Add the PTGADJ register contents to the PTGC0LIM register.
		0001	Add the PTGADJ register contents to the PTGC1LIM register.
		0010	Add the PTGADJ register contents to the PTGT0LIM register.
		0011	Add the PTGADJ register contents to the PTGT1LIM register.
		0100	Add the PTGADJ register contents to the PTGSDLIM register.
		0101	Add the PTGADJ register contents to the PTGL0 register.
		0110	Reserved; do not use.
		0111	Reserved; do not use.
	PTGCOPY(1)	1000	Copy the PTGHOLD register contents to the PTGC0LIM register.
		1001	Copy the PTGHOLD register contents to the PTGC1LIM register.
		1010	Copy the PTGHOLD register contents to the PTGT0LIM register.
		1011	Copy the PTGHOLD register contents to the PTGT1LIM register.
		1100	Copy the PTGHOLD register contents to the PTGSDLIM register.
		1101	Copy the PTGHOLD register contents to the PTGL0 register.
		1110	Reserved; do not use.
		1111	Reserved; do not use.

Note 1: All reserved commands or options will execute, but they do not have any affect (i.e., execute as a NOP instruction).

TABLE 22-2: PTG COMMAND OPTIONS (CONTINUED)

bit 3-0	Step Command	OPTION[3:0]	Option Description
	PTGWHI(1) or PTGWLO(1)	0000	PTGI0 (see Table 22-3 for input assignments).
		• • •	• • •
		1111	PTGI15 (see Table 22-3 for input assignments).
	PTGIRQ(1)	0000	Generate PTG Interrupt 0.
		• • •	• • •
		0111	Generate PTG Interrupt 7.
		1000	Reserved; do not use.
		• • •	• • •
		1111	Reserved; do not use.
	PTGTRIG	00000	PTGO0 (see Table 22-4 for output assignments).
		00001	PTGO1 (see Table 22-4 for output assignments).
		• • •	• • •
		11110	PTGO30 (see Table 22-4 for output assignments).
		11111	PTGO31 (see Table 22-4 for output assignments).
	PTGWHI(1) or PTGWLO(1)	0000	PTGI0 (see Table 22-3 for input assignments).
		• • •	• • •
		1111	PTGI15 (see Table 22-3 for input assignments).
	PTGIRQ(1)	0000	Generate PTG Interrupt 0.
		• • •	• • •
		0111	Generate PTG Interrupt 7.
		1000	Reserved; do not use.
		• • •	• • •
		1111	Reserved; do not use.
	PTGTRIG	00000	PTGO0 (see Table 22-4 for output assignments).
		00001	PTGO1 (see Table 22-4 for output assignments).

Note 1: All reserved commands or options will execute, but they do not have any affect (i.e., execute as a NOP instruction).

© 2018-2019 Microchip Technology Inc.

TABLE 22-3: PTG INPUT DESCRIPTIONS

PTG Input Number	PTG Input Description
PTG Trigger Input 0	Trigger Input from PWM Channel 1
PTG Trigger Input 1	Trigger Input from PWM Channel 2
PTG Trigger Input 2	Trigger Input from PWM Channel 3
PTG Trigger Input 3	Trigger Input from PWM Channel 4
PTG Trigger Input 4	Reserved
PTG Trigger Input 5	Reserved
PTG Trigger Input 6	Reserved
PTG Trigger Input 7	Trigger Input from SCCP4
PTG Trigger Input 8	Trigger Input from MCCP5
PTG Trigger Input 9	Trigger Input from Comparator 1
PTG Trigger Input 10	Trigger Input from Comparator 2
PTG Trigger Input 11	Trigger Input from Comparator 3
PTG Trigger Input 12	Trigger Input from CLC1
PTG Trigger Input 13	Trigger Input ADC Common Interrupt
PTG Trigger Input 14	Reserved
PTG Trigger Input 15	Trigger Input from INT2 PPS

TABLE 22-4: PTG OUTPUT DESCRIPTIONS

PTG Output Number	PTG Output Description
PTGO0 to PTGO11	Reserved
PTGO12	ADC TRGSRC[30]
PTGO13 to PTGO23	Reserved
PTGO24	PPS Output RP46
PTGO25	PPS Output RP47
PTGO26	PPS Input RP6
PTGO27	PPS Input RP7
PTGO28 to PTGO31	Reserved

NOTES:

© 2018-2019 Microchip Technology Inc.

23.0 CURRENT BIAS GENERATOR (CBG)

Note 1: This data sheet summarizes the features of the dsPIC33CK64MP105 family of devices. It is not intended to be a comprehensive reference source. To complement the information in this data sheet, refer to **"Current Bias Generator (CBG)"** (www.microchip.com/DS70005253) in the *"dsPIC33/PIC24 Family Reference Manual"*.

2: Some registers and associated bits described in this section may not be available on all devices. Refer to **Section 4.0 "Memory Organization"** in this data sheet for device-specific register and bit information.

The Current Bias Generator (CBG) consists of two classes of current sources: 10 µA and 50 µA sources. The major features of each current source are:

- 10 µA Current Sources:
  - Current sourcing only
  - Up to four independent sources
- 50 µA Current Sources:
  - Selectable current sourcing or sinking
  - Selectable current mirroring for sourcing and sinking

A simplified block diagram of the CBG module is shown in Figure 23-1.

FIGURE 23-1: CONSTANT-CURRENT SOURCE MODULE BLOCK DIAGRAM(2)

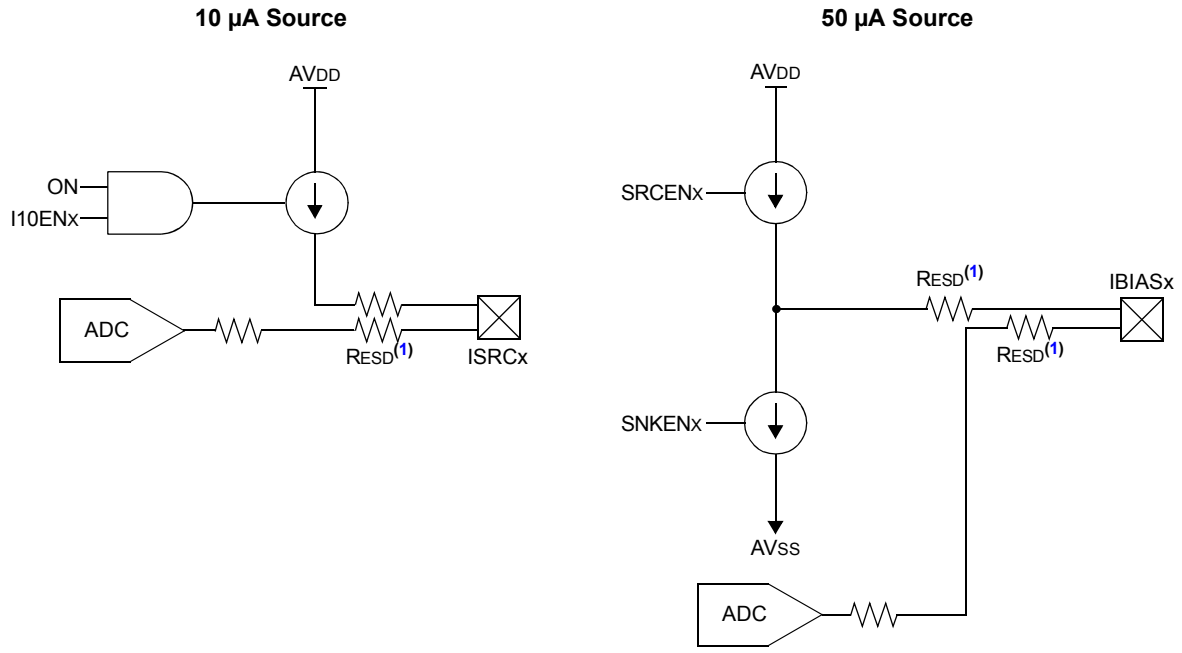

Note 1: RESD is typically 300 Ohms.

2: In Figure 23-1 only, the ADC analog input is shown for clarity. Each analog peripheral connected to the pin has a separate Electrostatic Discharge (ESD) resistor.

23.1 Current Bias Generator Control Registers

REGISTER 23-1: BIASCON: CURRENT BIAS GENERATOR CONTROL REGISTER

R/W-0	U-0	U-0	U-0	U-0	U-0	U-0	U-0
ON	—	—	—	—	—	—	—
bit 15							bit 8

U-0	U-0	U-0	U-0	R/W-0	R/W-0	R/W-0	R/W-0
—	—	—	—	I10EN3	I10EN2	I10EN1	I10EN0
bit 7							bit 0

Legend:			
R = Readable bit	W = Writable bit	U = Unimplemented bit, read as ‘0’	
-n = Value at POR	‘1’ = Bit is set	‘0’ = Bit is cleared	x = Bit is unknown

bit 15 **ON:** Current Bias Module Enable bit
1 = Module is enabled
0 = Module is disabled

bit 14-4 **Unimplemented:** Read as ‘0’

bit 3 **I10EN3:** 10 µA Enable for Output 3 bit
1 = 10 µA output is enabled
0 = 10 µA output is disabled

bit 2 **I10EN2:** 10 µA Enable for Output 2 bit
1 = 10 µA output is enabled
0 = 10 µA output is disabled

bit 1 **I10EN1:** 10 µA Enable for Output 1 bit
1 = 10 µA output is enabled
0 = 10 µA output is disabled

bit 0 **I10EN0:** 10 µA Enable for Output 0 bit
1 = 10 µA output is enabled
0 = 10 µA output is disabled

© 2018-2019 Microchip Technology Inc.

REGISTER 23-2: IBIASCONH: CURRENT BIAS GENERATOR 50 µA CURRENT SOURCE CONTROL HIGH REGISTER

U-0	U-0	R/W-0	R/W-0	R/W-0	R/W-0	R/W-0	R/W-0
—	—	SHRSRCEN3	SHRSNKEN3	GENSRCEN3	GENSNKEN3	SRCEN3	SNKEN3
bit 15							bit 8

U-0	U-0	R/W-0	R/W-0	R/W-0	R/W-0	R/W-0	R/W-0
—	—	SHRSRCEN2	SHRSNKEN2	GENSRCEN2	GENSNKEN2	SRCEN2	SNKEN2
bit 7							bit 0

Legend:			
R = Readable bit	W = Writable bit	U = Unimplemented bit, read as ‘0’	
-n = Value at POR	‘1’ = Bit is set	‘0’ = Bit is cleared	x = Bit is unknown

bit 15-14 **Unimplemented:** Read as ‘0’

bit 13 **SHRSRCEN3:** Share Source Enable for Output #3 bit
1 = Sourcing Current Mirror mode is enabled (uses reference from another source)
0 = Sourcing Current Mirror mode is disabled

bit 12 **SHRSNKEN3:** Share Sink Enable for Output #3 bit
1 = Sinking Current Mirror mode is enabled (uses reference from another source)
0 = Sinking Current Mirror mode is disabled

bit 11 **GENSRCEN3:** Generated Source Enable for Output #3 bit
1 = Source generates the current source mirror reference
0 = Source does not generate the current source mirror reference

bit 10 **GENSNKEN3:** Generated Sink Enable for Output #3 bit
1 = Source generates the current source mirror reference
0 = Source does not generate the current source mirror reference

bit 9 **SRCEN3:** Source Enable for Output #3 bit
1 = Current source is enabled
0 = Current source is disabled

bit 8 **SNKEN3:** Sink Enable for Output #3 bit
1 = Current sink is enabled
0 = Current sink is disabled

bit 7-6 **Unimplemented:** Read as ‘0’

bit 5 **SHRSRCEN2:** Share Source Enable for Output #2 bit
1 = Sourcing Current Mirror mode is enabled (uses reference from another source)
0 = Sourcing Current Mirror mode is disabled

bit 4 **SHRSNKEN2:** Share Sink Enable for Output #2 bit
1 = Sinking Current Mirror mode is enabled (uses reference from another source)
0 = Sinking Current Mirror mode is disabled

bit 3 **GENSRCEN2:** Generated Source Enable for Output #2 bit
1 = Source generates the current source mirror reference
0 = Source does not generate the current source mirror reference

bit 2 **GENSNKEN2:** Generated Sink Enable for Output #2 bit
1 = Source generates the current source mirror reference
0 = Source does not generate the current source mirror reference

bit 1 **SRCEN2:** Source Enable for Output #2 bit
1 = Current source is enabled
0 = Current source is disabled

bit 0 **SNKEN2:** Sink Enable for Output #2 bit
1 = Current sink is enabled
0 = Current sink is disabled

REGISTER 23-3: IBIASCONL: CURRENT BIAS GENERATOR 50 µA CURRENT SOURCE CONTROL LOW REGISTER

U-0	U-0	R/W-0	R/W-0	R/W-0	R/W-0	R/W-0	R/W-0
—	—	SHRSRCEN1	SHRSNKEN1	GENSRCEN1	GENSNKEN1	SRCEN1	SNKEN1
bit 15							bit 8

U-0	U-0	R/W-0	R/W-0	R/W-0	R/W-0	R/W-0	R/W-0
—	—	SHRSRCEN0	SHRSNKEN0	GENSRCEN0	GENSNKEN0	SRCEN0	SNKEN0
bit 7							bit 0

Legend:			
R = Readable bit	W = Writable bit	U = Unimplemented bit, read as ‘0’	
-n = Value at POR	‘1’ = Bit is set	‘0’ = Bit is cleared	x = Bit is unknown

bit 15-14 **Unimplemented:** Read as ‘0’

bit 13 **SHRSRCEN1:** Share Source Enable for Output #1 bit
1 = Sourcing Current Mirror mode is enabled (uses reference from another source)
0 = Sourcing Current Mirror mode is disabled

bit 12 **SHRSNKEN1:** Share Sink Enable for Output #1 bit
1 = Sinking Current Mirror mode is enabled (uses reference from another source)
0 = Sinking Current Mirror mode is disabled

bit 11 **GENSRCEN1:** Generated Source Enable for Output #1 bit
1 = Source generates the current source mirror reference
0 = Source does not generate the current source mirror reference

bit 10 **GENSNKEN1:** Generated Sink Enable for Output #1 bit
1 = Source generates the current source mirror reference
0 = Source does not generate the current source mirror reference

bit 9 **SRCEN1:** Source Enable for Output #1 bit
1 = Current source is enabled
0 = Current source is disabled

bit 8 **SNKEN1:** Sink Enable for Output #1 bit
1 = Current sink is enabled
0 = Current sink is disabled

bit 7-6 **Unimplemented:** Read as ‘0’

bit 5 **SHRSRCEN0:** Share Source Enable for Output #0 bit
1 = Sourcing Current Mirror mode is enabled (uses reference from another source)
0 = Sourcing Current Mirror mode is disabled

bit 4 **SHRSNKEN0:** Share Sink Enable for Output #0 bit
1 = Sinking Current Mirror mode is enabled (uses reference from another source)
0 = Sinking Current Mirror mode is disabled

bit 3 **GENSRCEN0:** Generated Source Enable for Output #0 bit
1 = Source generates the current source mirror reference
0 = Source does not generate the current source mirror reference

bit 2 **GENSNKEN0:** Generated Sink Enable for Output #0 bit
1 = Source generates the current source mirror reference
0 = Source does not generate the current source mirror reference

bit 1 **SRCEN0:** Source Enable for Output #0 bit
1 = Current source is enabled
0 = Current source is disabled

bit 0 **SNKEN0:** Sink Enable for Output #0 bit
1 = Current sink is enabled
0 = Current sink is disabled

© 2018-2019 Microchip Technology Inc.

24.0 OPERATIONAL AMPLIFIER

Note: The 28-pin device variants support only two op amp instances. Refer to Table 1 and Table 2 for availability.

The dsPIC33CK64MP105 family implements three instances of operational amplifiers (op amps). The op amps can be used for a wide variety of purposes, including signal conditioning and filtering. The three op amps are functionally identical. The block diagram for a single amplifier is shown in Figure 24-1.

FIGURE 24-1: SINGLE OPERATIONAL AMPLIFIER BLOCK DIAGRAM

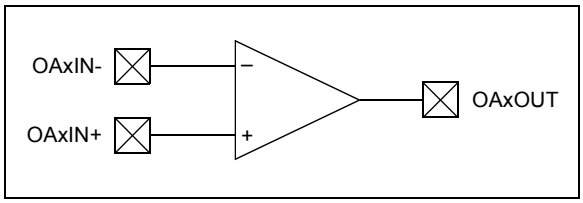

The op amps are controlled by two SFR registers: AMPCON1L and AMPCON1H. They remain in a low-power state until the AMPON bit is set. Each op amp can then be enabled independently by setting the corresponding AMPENx bit (x = 1, 2, 3).

The NCHDISx bit provides some flexibility regarding input range verses Integral Nonlinearity (INL). When NCHDISx = 0 (default), the op amps have a wider input voltage range (see Table 31-39 in **Section 31.0 "Electrical Characteristics"**). When NCHDISx = 1, the wider input range is traded for improved INL performance (lower INL).

24.1 Operational Amplifier Control Registers

REGISTER 24-1: AMPCON1L: OP AMP CONTROL REGISTER LOW

R/W-0	U-0	U-0	U-0	U-0	U-0	U-0	U-0
AMPON	—	—	—	—	—	—	—
bit 15							bit 8

U-0	U-0	U-0	U-0	U-0	R/W-0	R/W-0	R/W-0
—	—	—	—	—	AMPEN3(1)	AMPEN2	AMPEN1
bit 7							bit 0

Legend:			
R = Readable bit	W = Writable bit	U = Unimplemented bit, read as ‘0’	
-n = Value at POR	‘1’ = Bit is set	‘0’ = Bit is cleared	x = Bit is unknown

bit 15 **AMPON:** Op Amp Enable/On bit
1 = Enables op amp modules if their respective AMPENx bits are also asserted
0 = Disables all op amp modules

bit 14-3 **Unimplemented:** Read as ‘0’

bit 2 **AMPEN3:** Op Amp #3 Enable bit(1)
1 = Enables Op Amp #3 if the AMPON bit is also asserted
0 = Disables Op Amp #3

bit 1 **AMPEN2:** Op Amp #2 Enable bit
1 = Enables Op Amp #2 if the AMPON bit is also asserted
0 = Disables Op Amp #2

bit 0 **AMPEN1:** Op Amp #1 Enable bit
1 = Enables Op Amp #1 if the AMPON bit is also asserted
0 = Disables Op Amp #1

Note 1: This bit is not available on 28-pin devices.

© 2018-2019 Microchip Technology Inc.

REGISTER 24-2: AMPCON1H: OP AMP CONTROL REGISTER HIGH

U-0	U-0	U-0	U-0	U-0	U-0	U-0	U-0
—	—	—	—	—	—	—	—
bit 15							bit 8

U-0	U-0	U-0	U-0	U-0	R/W-0	R/W-0	R/W-0
—	—	—	—	—	NCHDIS3(1)	NCHDIS2	NCHDIS1
bit 7							bit 0

Legend:			
R = Readable bit	W = Writable bit	U = Unimplemented bit, read as ‘0’	
-n = Value at POR	‘1’ = Bit is set	‘0’ = Bit is cleared	x = Bit is unknown

bit 15-3 **Unimplemented:** Read as ‘0’

bit 2 **NCHDIS3:** Op Amp #3 N Channel Disable bit(1)
1 = Disables Op Amp #3 N channels input stage; reduced INL, but lowered input voltage range
0 = Wide input range for Op Amp #3

bit 1 **NCHDIS2:** Op Amp #2 N Channel Disable bit
1 = Disables Op Amp #2 N channels input stage; reduced INL, but lowered input voltage range
0 = Wide input range for Op Amp #2

bit 0 **NCHDIS1:** Op Amp #1 N Channel Disable bit
1 = Disables Op Amp #1 N channels input stage; reduced INL, but lowered input voltage range
0 = Wide input range for Op Amp #1

Note 1: This bit is not available on 28-pin devices.

NOTES:

© 2018-2019 Microchip Technology Inc.

25.0 DEADMAN TIMER (DMT)

Note 1: This data sheet summarizes the features of the dsPIC33CK64MP105 family of devices. It is not intended to be a comprehensive reference source. To complement the information in this data sheet, refer to **"Deadman Timer (DMT)"** (www.microchip.com/DS70005155) in the *"dsPIC33/PIC24 Family Reference Manual"*.

The primary function of the Deadman Timer (DMT) is to interrupt the processor in the event of a software malfunction. The DMT, which works on the system clock, is a free-running instruction fetch timer, which is clocked whenever an instruction fetch occurs, until a count match occurs. Instructions are not fetched when the processor is in Sleep mode.

DMT can be enabled in the Configuration fuse or by software in the DMTCON register by setting the ON bit. The DMT consists of a 32-bit counter with a time-out count match value, as specified by the two 16-bit Configuration Fuse registers: FDMTCNTL and FDMTCNTH.

A DMT is typically used in mission-critical and safety-critical applications, where any single failure of the software functionality and sequencing must be detected.

Figure 25-1 shows a block diagram of the Deadman Timer module.

FIGURE 25-1: DEADMAN TIMER BLOCK DIAGRAM

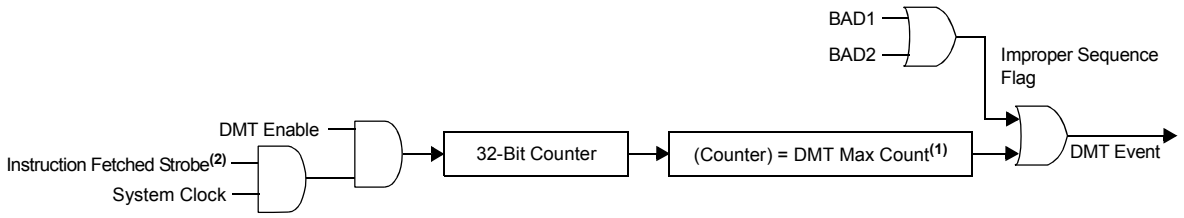

Note 1: DMT Max Count is controlled by the initial value of the FDMTCNTL and FDMTCNTH Configuration registers.
2: DMT window interval is controlled by the value of the FDMTIVTL and FDMTIVTH Configuration registers.

25.1 Deadman Timer Control/Status Registers

REGISTER 25-1: DMTCON: DEADMAN TIMER CONTROL REGISTER

R/W-0	U-0	U-0	U-0	U-0	U-0	U-0	U-0
ON[1]	—	—	—	—	—	—	—
bit 15							bit 8

U-0	U-0	U-0	U-0	U-0	U-0	U-0	U-0
—	—	—	—	—	—	—	—
bit 7							bit 0

Legend:			
R = Readable bit	W = Writable bit	U = Unimplemented bit, read as ‘0’	
-n = Value at POR	‘1’ = Bit is set	‘0’ = Bit is cleared	x = Bit is unknown

bit 15 **ON:** DMT Module Enable bit[1]
1 = Deadman Timer module is enabled
0 = Deadman Timer module is not enabled

bit 14-0 **Unimplemented:** Read as ‘0’

Note 1: This bit has control only when DMTDIS = 0 in the FDMT register.

REGISTER 25-2: DMTPRECLR: DEADMAN TIMER PRECLEAR REGISTER

R/W-0	R/W-0	R/W-0	R/W-0	R/W-0	R/W-0	R/W-0	R/W-0
STEP1[7:0]							
bit 15							bit 8

U-0	U-0	U-0	U-0	U-0	U-0	U-0	U-0
—	—	—	—	—	—	—	—
bit 7							bit 0

Legend:			
R = Readable bit	W = Writable bit	U = Unimplemented bit, read as ‘0’	
-n = Value at POR	‘1’ = Bit is set	‘0’ = Bit is cleared	x = Bit is unknown

bit 15-8 **STEP1[7:0]:** DMT Preclear Enable bits
01000000 = Enables the Deadman Timer preclear (Step 1)
All Other Write Patterns = Sets the BAD1 flag; these bits are cleared when a DMT Reset event occurs. STEP1[7:0] bits are also cleared if the STEP2[7:0] bits are loaded with the correct value in the correct sequence.

bit 7-0 **Unimplemented:** Read as ‘0’

© 2018-2019 Microchip Technology Inc.

REGISTER 25-3: DMTCLR: DEADMAN TIMER CLEAR REGISTER

U-0	U-0	U-0	U-0	U-0	U-0	U-0	U-0
—	—	—	—	—	—	—	—
bit 15							bit 8

R/W-0	R/W-0	R/W-0	R/W-0	R/W-0	R/W-0	R/W-0	R/W-0
STEP2[7:0]							
bit 7							bit 0

Legend:			
R = Readable bit	W = Writable bit	U = Unimplemented bit, read as ‘0’	
-n = Value at POR	‘1’ = Bit is set	‘0’ = Bit is cleared	x = Bit is unknown

bit 15-8 **Unimplemented:** Read as ‘0’

bit 7-0 **STEP2[7:0]:** DMT Clear Timer bits

00001000 = Clears STEP1[7:0], STEP2[7:0] and the Deadman Timer if preceded by the correct loading of the STEP1[7:0] bits in the correct sequence. The write to these bits may be verified by reading the DMTCNTL/H register and observing the counter being reset.

All Other Write Patterns = Sets the BAD2 bit; the value of STEP1[7:0] will remain unchanged and the new value being written to STEP2[7:0] will be captured. These bits are cleared when a DMT Reset event occurs.

REGISTER 25-4: DMTSTAT: DEADMAN TIMER STATUS REGISTER

U-0	U-0	U-0	U-0	U-0	U-0	U-0	U-0
—	—	—	—	—	—	—	—
bit 15							bit 8

HC/R-0	HC/R-0	HC/R-0	U-0	U-0	U-0	U-0	R-0
BAD1	BAD2	DMTEVENT	—	—	—	—	WINOPN
bit 7							bit 0

Legend:	HC = Hardware Clearable bit		
R = Readable bit	W = Writable bit	U = Unimplemented bit, read as ‘0’	
-n = Value at POR	‘1’ = Bit is set	‘0’ = Bit is cleared	x = Bit is unknown

bit 15-8 **Unimplemented:** Read as ‘0’

bit 7 **BAD1:** Deadman Timer Bad STEP1[7:0] Value Detect bit
1 = Incorrect STEP1[7:0] value was detected
0 = Incorrect STEP1[7:0] value was not detected

bit 6 **BAD2:** Deadman Timer Bad STEP2[7:0] Value Detect bit
1 = Incorrect STEP2[7:0] value was detected
0 = Incorrect STEP2[7:0] value was not detected

bit 5 **DMTEVENT:** Deadman Timer Event bit
1 = Deadman Timer event was detected (counter expired, or bad STEP1[7:0] or STEP2[7:0] value was entered prior to counter increment)
0 = Deadman Timer event was not detected

bit 4-1 **Unimplemented:** Read as ‘0’

bit 0 **WINOPN:** Deadman Timer Clear Window bit
1 = Deadman Timer clear window is open
0 = Deadman Timer clear window is not open

© 2018-2019 Microchip Technology Inc.

REGISTER 25-5: DMTCNTL: DEADMAN TIMER COUNT REGISTER LOW

R-0	R-0	R-0	R-0	R-0	R-0	R-0	R-0
COUNTER[15:8]							
bit 15							bit 8

R-0	R-0	R-0	R-0	R-0	R-0	R-0	R-0
COUNTER[7:0]							
bit 7							bit 0

Legend:			
R = Readable bit	W = Writable bit	U = Unimplemented bit, read as ‘0’	
-n = Value at POR	‘1’ = Bit is set	‘0’ = Bit is cleared	x = Bit is unknown

bit 15-0 **COUNTER[15:0]:** Read Current Contents of Lower DMT Counter bits

REGISTER 25-6: DMTCNTH: DEADMAN TIMER COUNT REGISTER HIGH

R-0	R-0	R-0	R-0	R-0	R-0	R-0	R-0
COUNTER[31:24]							
bit 15							bit 8

R-0	R-0	R-0	R-0	R-0	R-0	R-0	R-0
COUNTER[23:16]							
bit 7							bit 0

Legend:			
R = Readable bit	W = Writable bit	U = Unimplemented bit, read as ‘0’	
-n = Value at POR	‘1’ = Bit is set	‘0’ = Bit is cleared	x = Bit is unknown

bit 15-0 **COUNTER[31:16]:** Read Current Contents of Higher DMT Counter bits

REGISTER 25-7: DMTPSCNTL: DMT POST-CONFIGURE COUNT STATUS REGISTER LOW

R-0	R-0	R-0	R-0	R-0	R-0	R-0	R-0
PSCNT[15:8]							
bit 15							bit 8

R-0	R-0	R-0	R-0	R-0	R-0	R-0	R-0
PSCNT[7:0]							
bit 7							bit 0

Legend:			
R = Readable bit	W = Writable bit	U = Unimplemented bit, read as ‘0’	
-n = Value at POR	‘1’ = Bit is set	‘0’ = Bit is cleared	x = Bit is unknown

bit 15-0 **PSCNT[15:0]:** Lower DMT Instruction Count Value Configuration Status bits
This is always the value of the FDMTCNTL Configuration register.

REGISTER 25-8: DMTPSCNTH: DMT POST-CONFIGURE COUNT STATUS REGISTER HIGH

R-0	R-0	R-0	R-0	R-0	R-0	R-0	R-0
PSCNT[31:24]							
bit 15							bit 8

R-0	R-0	R-0	R-0	R-0	R-0	R-0	R-0
PSCNT[23:16]							
bit 7							bit 0

Legend:			
R = Readable bit	W = Writable bit	U = Unimplemented bit, read as ‘0’	
-n = Value at POR	‘1’ = Bit is set	‘0’ = Bit is cleared	x = Bit is unknown

bit 15-0 **PSCNT[31:16]:** Higher DMT Instruction Count Value Configuration Status bits
This is always the value of the FDMTCNTH Configuration register.

© 2018-2019 Microchip Technology Inc.

REGISTER 25-9: DMTPSINTVL: DMT POST-CONFIGURE INTERVAL STATUS REGISTER LOW

R-0	R-0	R-0	R-0	R-0	R-0	R-0	R-0
PSINTV[15:8]							
bit 15							bit 8

R-0	R-0	R-0	R-0	R-0	R-0	R-0	R-0
PSINTV[7:0]							
bit 7							bit 0

Legend:			
R = Readable bit	W = Writable bit	U = Unimplemented bit, read as ‘0’	
-n = Value at POR	‘1’ = Bit is set	‘0’ = Bit is cleared	x = Bit is unknown

bit 15-0 **PSINTV[15:0]:** Lower DMT Window Interval Configuration Status bits
This is always the value of the FDMTIVTL Configuration register.

REGISTER 25-10: DMTPSINTVH: DMT POST-CONFIGURE INTERVAL STATUS REGISTER HIGH

R-0	R-0	R-0	R-0	R-0	R-0	R-0	R-0
PSINTV[31:24]							
bit 15							bit 8

R-0	R-0	R-0	R-0	R-0	R-0	R-0	R-0
PSINTV[23:16]							
bit 7							bit 0

Legend:			
R = Readable bit	W = Writable bit	U = Unimplemented bit, read as ‘0’	
-n = Value at POR	‘1’ = Bit is set	‘0’ = Bit is cleared	x = Bit is unknown

bit 15-0 **PSINTV[31:16]:** Higher DMT Window Interval Configuration Status bits
This is always the value of the FDMTIVTH Configuration register.

REGISTER 25-11: DMTHOLDREG: DMT HOLD REGISTER(1)

R-0	R-0	R-0	R-0	R-0	R-0	R-0	R-0
UPRCNT[15:8]							
bit 15							bit 8

R-0	R-0	R-0	R-0	R-0	R-0	R-0	R-0
UPRCNT[7:0]							
bit 7							bit 0

Legend:			
R = Readable bit	W = Writable bit	U = Unimplemented bit, read as ‘0’	
-n = Value at POR	‘1’ = Bit is set	‘0’ = Bit is cleared	x = Bit is unknown

bit 15-0 **UPRCNT[15:0]:** DMTCNTH Register Value when DMTCNTL and DMTCNTH were Last Read bits

Note 1: The DMTHOLDREG register is initialized to ‘0’ on Reset, and is only loaded when the DMTCNTL and DMTCNTH registers are read.

© 2018-2019 Microchip Technology Inc.

26.0 32-BIT PROGRAMMABLE CYCLIC REDUNDANCY CHECK (CRC) GENERATOR

Note 1: This data sheet summarizes the features of the dsPIC33CK64MP105 family of devices. It is not intended to be a comprehensive reference source. For more information, refer to **"32-Bit Programmable Cyclic Redundancy Check (CRC)"** (www.microchip.com/DS30009729) in the *"dsPIC33/PIC24 Family Reference Manual"*.

The 32-bit programmable CRC generator provides a hardware implemented method of quickly generating checksums for various networking and security applications. It offers the following features:

- User-Programmable CRC Polynomial Equation, up to 32 Bits
- Programmable Shift Direction (little or big-endian)
- Independent Data and Polynomial Lengths
- Configurable Interrupt Output
- Data FIFO

A simple version of the CRC shift engine is displayed in Figure 26-1.

FIGURE 26-1: CRC MODULE BLOCK DIAGRAM

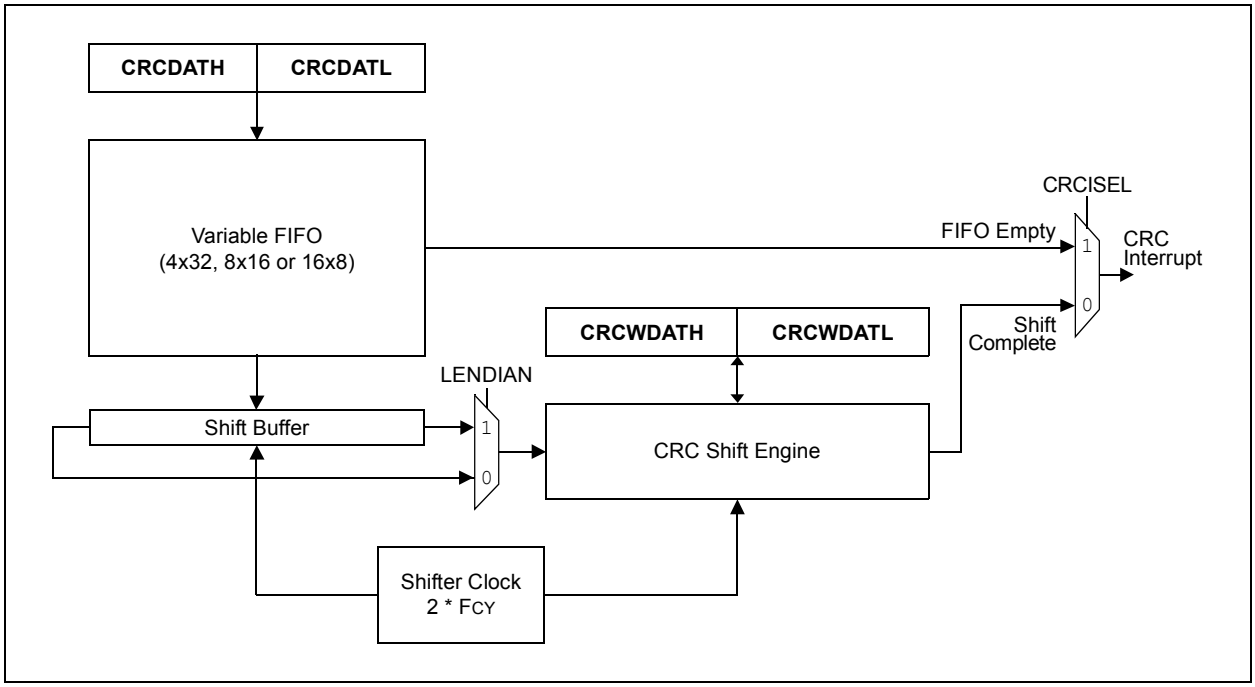

26.1 CRC Control Registers

REGISTER 26-1: CRCCONL: CRC CONTROL REGISTER LOW

R/W-0	U-0	R/W-0	HSC/R-0	HSC/R-0	HSC/R-0	HSC/R-0	HSC/R-0
CRCEN	—	CSIDL	VWORD4	VWORD3	VWORD2	VWORD1	VWORD0
bit 15							bit 8

HSC/R-0	HSC/R-1	R/W-0	HC/R/W-0	R/W-0	R/W-0	U-0	U-0
CRCFUL	CRCMPT	CRCISEL	CRCGO	LENDIAN	MOD	—	—
bit 7							bit 0

Legend:	HC = Hardware Clearable bit	HSC = Hardware Settable/Clearable bit	
R = Readable bit	W = Writable bit	U = Unimplemented bit, read as ‘0’	
-n = Value at POR	‘1’ = Bit is set	‘0’ = Bit is cleared	x = Bit is unknown

bit 15 **CRCEN:** CRC Enable bit
1 = Enables module
0 = Disables module

bit 14 **Unimplemented:** Read as ‘0’

bit 13 **CSIDL:** CRC Stop in Idle Mode bit
1 = Discontinues module operation when device enters Idle mode
0 = Continues module operation in Idle mode

bit 12-8 **VWORD[4:0]:** Pointer Value bits
Indicates the number of valid words in the FIFO. Has a maximum value of 8 when PLEN[4:0] $\geq$ 7 or 16 when PLEN[4:0] $\leq$ 7.

bit 7 **CRCFUL:** CRC FIFO Full bit
1 = FIFO is full
0 = FIFO is not full

bit 6 **CRCMPT:** CRC FIFO Empty bit
1 = FIFO is empty
0 = FIFO is not empty

bit 5 **CRCISEL:** CRC Interrupt Selection bit
1 = Interrupt on FIFO is empty; the final word of data is still shifting through the CRC
0 = Interrupt on shift is complete and results are ready

bit 4 **CRCGO:** CRC Start bit
1 = Starts CRC serial shifter
0 = CRC serial shifter is turned off

bit 3 **LENDIAN:** Data Shift Direction Select bit
1 = Data word is shifted into the FIFO, starting with the LSb (little-endian)
0 = Data word is shifted into the FIFO, starting with the MSb (big-endian)

bit 2 **MOD:** CRC Calculation Mode bit
1 = Alternate mode
0 = Legacy mode bit

bit 1-0 **Unimplemented:** Read as ‘0’

© 2018-2019 Microchip Technology Inc.

REGISTER 26-2: CRCCONH: CRC CONTROL REGISTER HIGH

U-0	U-0	U-0	R/W-0	R/W-0	R/W-0	R/W-0	R/W-0
—	—	—	DWIDTH4	DWIDTH3	DWIDTH2	DWIDTH1	DWIDTH0
bit 15							bit 8

U-0	U-0	U-0	R/W-0	R/W-0	R/W-0	R/W-0	R/W-0
—	—	—	PLEN4	PLEN3	PLEN2	PLEN1	PLEN0
bit 7							bit 0

Legend:			
R = Readable bit	W = Writable bit	U = Unimplemented bit, read as ‘0’	
-n = Value at POR	‘1’ = Bit is set	‘0’ = Bit is cleared	x = Bit is unknown

bit 15-13 **Unimplemented:** Read as ‘0’

bit 12-8 **DWIDTH[4:0]:** Data Word Width Configuration bits
Configures the width of the data word (Data Word Width – 1).

bit 7-5 **Unimplemented:** Read as ‘0’

bit 4-0 **PLEN[4:0]:** Polynomial Length Configuration bits
Configures the length of the polynomial (Polynomial Length – 1).

REGISTER 26-3: CRCXORL: CRC XOR POLYNOMIAL REGISTER, LOW BYTE

R/W-0	R/W-0	R/W-0	R/W-0	R/W-0	R/W-0	R/W-0	R/W-0
X[15:8]							
bit 15							bit 8

R/W-0	R/W-0	R/W-0	R/W-0	R/W-0	R/W-0	R/W-0	U-0
X[7:1]							—
bit 7							bit 0

Legend:			
R = Readable bit	W = Writable bit	U = Unimplemented bit, read as ‘0’	
-n = Value at POR	‘1’ = Bit is set	‘0’ = Bit is cleared	x = Bit is unknown

bit 15-1 **X[15:1]:** XOR of Polynomial Term x^n Enable bits

bit 0 **Unimplemented:** Read as ‘0’

REGISTER 26-4: CRCXORH: CRC XOR POLYNOMIAL REGISTER, HIGH BYTE

R/W-0	R/W-0	R/W-0	R/W-0	R/W-0	R/W-0	R/W-0	R/W-0
X[31:24]							
bit 15							bit 8

R/W-0	R/W-0	R/W-0	R/W-0	R/W-0	R/W-0	R/W-0	R/W-0
X[23:16]							
bit 7							bit 0

Legend:			
R = Readable bit	W = Writable bit	U = Unimplemented bit, read as ‘0’	
-n = Value at POR	‘1’ = Bit is set	‘0’ = Bit is cleared	x = Bit is unknown

bit 15-0 **X[31:16]:** XOR of Polynomial Term x^n Enable bits

© 2018-2019 Microchip Technology Inc.

27.0 POWER-SAVING FEATURES

Note 1: This data sheet summarizes the features of the dsPIC33CK64MP105 family of devices. It is not intended to be a comprehensive reference source. To complement the information in this data sheet, refer to **"Watchdog Timer and Power-Saving Modes"** (www.microchip.com/DS70615) in the *"dsPIC33/PIC24 Family Reference Manual"*.

The dsPIC33CK64MP105 family devices provide the ability to manage power consumption by selectively managing clocking to the CPU and the peripherals. In general, a lower clock frequency and a reduction in the number of peripherals being clocked constitutes lower consumed power.

dsPIC33CK64MP105 family devices can manage power consumption in four ways:

- Clock Frequency
- Instruction-Based Sleep and Idle modes
- Software-Controlled Doze mode
- Selective Peripheral Control in Software

Combinations of these methods can be used to selectively tailor an application's power consumption while still maintaining critical application features, such as timing-sensitive communications.

27.1 Clock Frequency and Clock Switching

The dsPIC33CK64MP105 family devices allow a wide range of clock frequencies to be selected under application control. If the system clock configuration is not locked, users can choose low-power or high-precision oscillators by simply changing the NOSCx bits (OSCCON[10:8]). The process of changing a system clock during operation, as well as limitations to the process, are discussed in more detail in **Section 9.0 "Oscillator with High-Frequency PLL"**.

27.2 Instruction-Based Power-Saving Modes

The dsPIC33CK64MP105 family devices have two special power-saving modes that are entered through the execution of a special `PWRSAV` instruction. Sleep mode stops clock operation and halts all code execution. Idle mode halts the CPU and code execution, but allows peripheral modules to continue operation. The assembler syntax of the `PWRSAV` instruction is shown in Example 27-1.

Sleep and Idle modes can be exited as a result of an enabled interrupt, WDT time-out or a device Reset. When the device exits these modes, it is said to "wake-up".

EXAMPLE 27-1: `PWRSAV` INSTRUCTION SYNTAX

```
PWRSAV  #0              ; Put the device into Sleep mode
PWRSAV  #1              ; Put the device into Idle mode
```

27.2.1 SLEEP MODE

The following occurs in Sleep mode:

- The system clock source is shut down. If an on-chip oscillator is used, it is turned off.
- The device current consumption is reduced to a minimum, provided that no I/O pin is sourcing current.
- The Fail-Safe Clock Monitor does not operate, since the system clock source is disabled.
- The LPRC clock continues to run in Sleep mode if the WDT is enabled.
- The WDT, if enabled, is automatically cleared prior to entering Sleep mode.
- Some device features or peripherals can continue to operate. This includes items such as the Input Change Notification on the I/O ports or peripherals that use an External Clock input.
- Any peripheral that requires the system clock source for its operation is disabled.

The device wakes up from Sleep mode on any of the these events:

- Any interrupt source that is individually enabled
- Any form of device Reset
- A WDT time-out

On wake-up from Sleep mode, the processor restarts with the same clock source that was active when Sleep mode was entered.

For optimal power savings, the regulators can be configured to go into standby when Sleep mode is entered by clearing the VREGS (RCON[8]) bit (default configuration).

If the application requires a faster wake-up time, and can accept higher current requirements, the VREGS (RCON[8]) bit can be set to keep the regulators active during Sleep mode. The available Low-Power Sleep modes are shown in Table 27-1. Additional regulator information is available in **Section 28.4 "On-Chip Voltage Regulator"**.

TABLE 27-1: LOW-POWER SLEEP MODES

Relative Power	LPWREN	VREGS	MODE
Highest	0	1	Full power, active
—	0	0	Full power, standby
—	1(1)	1	Low power, active
Lowest	1(1)	0	Low power, standby

Note 1: Low-Power modes, when LPWREN = 1, can only be used in the industrial temperature range.

27.2.2 IDLE MODE

The following occurs in Idle mode:

- The CPU stops executing instructions.
- The WDT is automatically cleared.
- The system clock source remains active. By default, all peripheral modules continue to operate normally from the system clock source, but can also be selectively disabled (see **Section 27.4 "Peripheral Module Disable"**).
- If the WDT or FSCM is enabled, the LPRC also remains active.

The device wakes from Idle mode on any of these events:

- Any interrupt that is individually enabled
- Any device Reset
- A WDT time-out

On wake-up from Idle mode, the clock is reapplied to the CPU and instruction execution will begin (2-4 clock cycles later), starting with the instruction following the PWRSAV instruction or the first instruction in the ISR.

All peripherals also have the option to discontinue operation when Idle mode is entered to allow for increased power savings. This option is selectable in the control register of each peripheral; for example, the SIDL bit in the Timer1 Control register (T1CON[13]).

27.2.3 INTERRUPTS COINCIDENT WITH POWER SAVE INSTRUCTIONS

Any interrupt that coincides with the execution of a PWRSAV instruction is held off until entry into Sleep or Idle mode has completed. The device then wakes up from Sleep or Idle mode.

© 2018-2019 Microchip Technology Inc.

27.3 Doze Mode

The preferred strategies for reducing power consumption are changing clock speed and invoking one of the power-saving modes. In some circumstances, this cannot be practical. For example, it may be necessary for an application to maintain uninterrupted synchronous communication, even while it is doing nothing else. Reducing system clock speed can introduce communication errors, while using a power-saving mode can stop communications completely.

Doze mode is a simple and effective alternative method to reduce power consumption while the device is still executing code. In this mode, the system clock continues to operate from the same source and at the same speed. Peripheral modules continue to be clocked at the same speed, while the CPU clock speed is reduced. Synchronization between the two clock domains is maintained, allowing the peripherals to access the SFRs while the CPU executes code at a slower rate.

Doze mode is enabled by setting the DOZEN bit (CLKDIV[11]). The ratio between peripheral and core clock speed is determined by the DOZE[2:0] bits (CLKDIV[14:12]). There are eight possible configurations, from 1:1 to 1:128, with 1:1 being the default setting.

Programs can use Doze mode to selectively reduce power consumption in event-driven applications. This allows clock-sensitive functions, such as synchronous communications, to continue without interruption while the CPU Idles, waiting for something to invoke an interrupt routine. An automatic return to full-speed CPU operation on interrupts can be enabled by setting the ROI bit (CLKDIV[15]). By default, interrupt events have no effect on Doze mode operation.

27.4 Peripheral Module Disable

The Peripheral Module Disable (PMD) registers provide a method to disable a peripheral module by stopping all clock sources supplied to that module. When a peripheral is disabled using the appropriate PMD control bit, the peripheral is in a minimum power consumption state. The control and status registers associated with the peripheral are also disabled, so writes to those registers do not have any effect and read values are invalid.

A peripheral module is enabled only if both the associated bit in the PMD register is cleared and the peripheral is supported by the specific dsPIC® DSC variant. If the peripheral is present in the device, it is enabled in the PMD register by default.

Note 1:	If a PMD bit is set, the corresponding module is disabled after a delay of one instruction cycle. Similarly, if a PMD bit is cleared, the corresponding module is enabled after a delay of one instruction cycle (assuming the module control registers are already configured to enable module operation).

27.5 Power-Saving Resources

Many useful resources are provided on the main product page of the Microchip website for the devices listed in this data sheet. This product page contains the latest updates and additional information.

27.5.1 KEY RESOURCES

- **"Watchdog Timer and Power-Saving Modes"** (www.microchip.com/DS70615) in the *"dsPIC33/PIC24 Family Reference Manual"*
- Code Samples
- Application Notes
- Software Libraries
- Webinars
- All related *"dsPIC33/PIC24 Family Reference Manual"* Sections
- Development Tools

27.6 PMD Control Registers

REGISTER 27-1: PMD1: PERIPHERAL MODULE DISABLE 1 CONTROL REGISTER

U-0	U-0	U-0	U-0	R/W-0	R/W-0	R/W-0	U-0
—	—	—	—	T1MD	QEI1MD	PWMMD	—
bit 15							bit 8

R/W-0	R/W-0	R/W-0	R/W-0	R/W-0	U-0	U-0	R/W-0
I2C1MD	U2MD	U1MD	SPI2MD	SPI1MD	—	—	ADC1MD
bit 7							bit 0

Legend:			
R = Readable bit	W = Writable bit	U = Unimplemented bit, read as ‘0’	
-n = Value at POR	‘1’ = Bit is set	‘0’ = Bit is cleared	x = Bit is unknown

bit 15-12 **Unimplemented:** Read as ‘0’

bit 11 **T1MD:** Timer1 Module Disable bit
1 = Timer1 module is disabled
0 = Timer1 module is enabled

bit 10 **QEI1MD:** QEI1 Module Disable bit
1 = QEI1 module is disabled
0 = QEI1 module is enabled

bit 9 **PWMMD:** PWM Module Disable bit
1 = PWM module is disabled
0 = PWM module is enabled

bit 8 **Unimplemented:** Read as ‘0’

bit 7 **I2C1MD:** I2C1 Module Disable bit
1 = I2C1 module is disabled
0 = I2C1 module is enabled

bit 6 **U2MD:** UART2 Module Disable bit
1 = UART2 module is disabled
0 = UART2 module is enabled

bit 5 **U1MD:** UART1 Module Disable bit
1 = UART1 module is disabled
0 = UART1 module is enabled

bit 4 **SPI2MD:** SPI2 Module Disable bit
1 = SPI2 module is disabled
0 = SPI2 module is enabled

bit 3 **SPI1MD:** SPI1 Module Disable bit
1 = SPI1 module is disabled
0 = SPI1 module is enabled

bit 2-1 **Unimplemented:** Read as ‘0’

bit 0 **ADC1MD:** ADC Module Disable bit
1 = ADC module is disabled
0 = ADC module is enabled

© 2018-2019 Microchip Technology Inc.

REGISTER 27-2: PMD2: PERIPHERAL MODULE DISABLE 2 CONTROL REGISTER

U-0	U-0	U-0	U-0	U-0	U-0	U-0	U-0
—	—	—	—	—	—	—	—
bit 15							bit 8

U-0	U-0	U-0	R/W-0	R/W-0	R/W-0	R/W-0	R/W-0
—	—	—	CCP5MD	CCP4MD	CCP3MD	CCP2MD	CCP1MD
bit 7							bit 0

Legend:			
R = Readable bit	W = Writable bit	U = Unimplemented bit, read as ‘0’	
-n = Value at POR	‘1’ = Bit is set	‘0’ = Bit is cleared	x = Bit is unknown

bit 15-5 **Unimplemented:** Read as ‘0’

bit 4 **CCP5MD:** SCCP5 Module Disable bit
1 = SCCP5 module is disabled
0 = SCCP5 module is enabled

bit 3 **CCP4MD:** SCCP4 Module Disable bit
1 = SCCP4 module is disabled
0 = SCCP4 module is enabled

bit 2 **CCP3MD:** SCCP3 Module Disable bit
1 = SCCP3 module is disabled
0 = SCCP3 module is enabled

bit 1 **CCP2MD:** SCCP2 Module Disable bit
1 = SCCP2 module is disabled
0 = SCCP2 module is enabled

bit 0 **CCP1MD:** SCCP1 Module Disable bit
1 = SCCP1 module is disabled
0 = SCCP1 module is enabled

REGISTER 27-3: PMD3: PERIPHERAL MODULE DISABLE 3 CONTROL REGISTER

U-0	U-0	U-0	U-0	U-0	U-0	U-0	U-0
—	—	—	—	—	—	—	—
bit 15							bit 8

R/W-0	U-0	R/W-0	U-0	R/W-0	U-0	R/W-0	U-0
CRCMD	—	QEI2MD	—	U3MD	—	I2C2MD	—
bit 7							bit 0

Legend:			
R = Readable bit	W = Writable bit	U = Unimplemented bit, read as ‘0’	
-n = Value at POR	‘1’ = Bit is set	‘0’ = Bit is cleared	x = Bit is unknown

bit 15-8 **Unimplemented:** Read as ‘0’

bit 7 **CRCMD:** CRC Module Disable bit
1 = CRC module is disabled
0 = CRC module is enabled

bit 6 **Unimplemented:** Read as ‘0’

bit 5 **QEI2MD:** QEI2 Module Disable bit
1 = QEI2 module is disabled
0 = QEI2 module is enabled

bit 4 **Unimplemented:** Read as ‘0’

bit 3 **U3MD:** UART3 Module Disable bit
1 = UART3 module is disabled
0 = UART3 module is enabled

bit 2 **Unimplemented:** Read as ‘0’

bit 1 **I2C2MD:** I2C2 Module Disable bit
1 = I2C2 module is disabled
0 = I2C2 module is enabled

bit 0 **Unimplemented:** Read as ‘0’

© 2018-2019 Microchip Technology Inc.

REGISTER 27-4: PMD4: PERIPHERAL MODULE DISABLE 4 CONTROL REGISTER

U-0	U-0	U-0	U-0	U-0	U-0	U-0	U-0
—	—	—	—	—	—	—	
bit 15							bit 8

U-0	U-0	U-0	U-0	R/W-0	U-0	U-0	U-0
—	—	—	—	REFOMD	—	—	—
bit 7							bit 0

Legend:			
R = Readable bit	W = Writable bit	U = Unimplemented bit, read as ‘0’	
-n = Value at POR	‘1’ = Bit is set	‘0’ = Bit is cleared	x = Bit is unknown

bit 15-4 **Unimplemented:** Read as ‘0’

bit 3 **REFOMD:** Reference Clock Module Disable bit
1 = Reference clock module is disabled
0 = Reference clock module is enabled

bit 2-0 **Unimplemented:** Read as ‘0’

REGISTER 27-5: PMD6: PERIPHERAL MODULE DISABLE 6 CONTROL REGISTER

U-0	U-0	U-0	U-0	R/W-0	R/W-0	R/W-0	R/W-0
—	—	—	—	DMA3MD	DMA2MD	DMA1MD	DMA0MD
bit 15							bit 8

U-0	U-0	U-0	U-0	U-0	U-0	U-0	R/W-0
—	—	—	—	—	—	—	SPI3MD
bit 7							bit 0

Legend:			
R = Readable bit	W = Writable bit	U = Unimplemented bit, read as ‘0’	
-n = Value at POR	‘1’ = Bit is set	‘0’ = Bit is cleared	x = Bit is unknown

bit 15-12 **Unimplemented:** Read as ‘0’

bit 11 **DMA3MD:** DMA3 Module Disable bit
1 = DMA3 module is disabled
0 = DMA3 module is enabled

bit 10 **DMA2MD:** DMA2 Module Disable bit
1 = DMA2 module is disabled
0 = DMA2 module is enabled

bit 9 **DMA1MD:** DMA1 Module Disable bit
1 = DMA1 module is disabled
0 = DMA1 module is enabled

bit 8 **DMA0MD:** DMA0 Module Disable bit
1 = DMA0 module is disabled
0 = DMA0 module is enabled

bit 7-1 **Unimplemented:** Read as ‘0’

bit 0 **SPI3MD:** SPI3 Module Disable bit
1 = SPI3 module is disabled
0 = SPI3 module is enabled

© 2018-2019 Microchip Technology Inc.

REGISTER 27-6: PMD7: PERIPHERAL MODULE DISABLE 7 CONTROL REGISTER

U-0	U-0	U-0	U-0	U-0	R/W-0	R/W-0	R/W-0
—	—	—	—	—	CMP3MD	CMP2MD	CMP1MD
bit 15							bit 8

U-0	U-0	U-0	U-0	R/W-0	U-0	U-0	U-0
—	—	—	—	PTGMD	—	—	—
bit 7							bit 0

Legend:			
R = Readable bit	W = Writable bit	U = Unimplemented bit, read as ‘0’	
-n = Value at POR	‘1’ = Bit is set	‘0’ = Bit is cleared	x = Bit is unknown

bit 15-11 **Unimplemented:** Read as ‘0’

bit 10 **CMP3MD:** Comparator 3 Module Disable bit
1 = Comparator 3 module is disabled
0 = Comparator 3 module is enabled

bit 9 **CMP2MD:** Comparator 2 Module Disable bit
1 = Comparator 2 module is disabled
0 = Comparator 2 module is enabled

bit 8 **CMP1MD:** Comparator 1 Module Disable bit
1 = Comparator 1 module is disabled
0 = Comparator 1 module is enabled

bit 7-4 **Unimplemented:** Read as ‘0’

bit 3 **PTGMD**: PTG Module Disable bit
1 = PTG module is disabled
0 = PTG module is enabled

bit 2-0 **Unimplemented:** Read as ‘0’

REGISTER 27-7: PMD8: PERIPHERAL MODULE DISABLE 8 CONTROL REGISTER

U-0	U-0	R/W-0	R/W-0	R/W-0	U-0	U-0	R/W-0
—	—	OPAMPMD	SENT2MD	SENT1MD	—	—	DMTMD
bit 15							bit 8

U-0	U-0	R/W-0	R/W-0	R/W-0	R/W-0	R/W-0	U-0
—	—	CLC4MD	CLC3MD	CLC2MD	CLC1MD	BIASMD	—
bit 7							bit 0

Legend:			
R = Readable bit	W = Writable bit	U = Unimplemented bit, read as ‘0’	
-n = Value at POR	‘1’ = Bit is set	‘0’ = Bit is cleared	x = Bit is unknown

bit 15-14 **Unimplemented:** Read as ‘0’

bit 13 **OPAMPMD:** Op Amp Module Disable bit
1 = Op amp modules are disabled
0 = Op amp modules are enabled

bit 12 **SENT2MD:** SENT2 Module Disable bit
1 = SENT2 module is disabled
0 = SENT2 module is enabled

bit 11 **SENT1MD:** SENT1 Module Disable bit
1 = SENT1 module is disabled
0 = SENT1 module is enabled

bit 10-9 **Unimplemented:** Read as ‘0’

bit 8 **DMTMD:** Deadman Timer Module Disable bit
1 = DMT module is disabled
0 = DMT module is enabled

bit 7-6 **Unimplemented:** Read as ‘0’

bit 5 **CLC4MD:** CLC4 Module Disable bit
1 = CLC4 module is disabled
0 = CLC4 module is enabled

bit 4 **CLC3MD**: CLC3 Module Disable bit
1 = CLC3 module is disabled
0 = CLC3 module is enabled

bit 3 **CLC2MD:** CLC2 Module Disable bit
1 = CLC2 module is disabled
0 = CLC2 module is enabled

bit 2 **CLC1MD:** CLC1 Module Disable bit
1 = CLC1 module is disabled
0 = CLC1 module is enabled

bit 1 **BIASMD:** Constant-Current Source Module Disable bit
1 = Constant-current source module is disabled
0 = Constant-current source module is enabled

bit 0 **Unimplemented:** Read as ‘0’

© 2018-2019 Microchip Technology Inc.

TABLE 27-2: PMD REGISTERS

Register	Bit 15	Bit14	Bit 13	Bit 12	Bit 11	Bit 10	Bit 9	Bit 8	Bit 7	Bit 6	Bit 5	Bit 4	Bit 3	Bit 2	Bit 1	Bit 0
PMD1	—	—	—	—	T1MD	QEIMD	PWMMD	—	I2C1MD	U2MD	U1MD	SPI2MD	SPI1MD	—	—	ADC1MD
PMD2	—	—	—	—	—	—	—	—	—	—	—	CCP5MD	CCP4MD	CCP3MD	CCP2MD	CCP1MD
PMD3	—	—	—	—	—	—	—	—	CRCMD	—	QEI2MD	—	U3MD	—	I2C2MD	—
PMD4	—	—	—	—	—	—	—	—	—	—	—	—	REFOMD	—	—	—
PMD6	—	—	—	—	DMA3MD	DMA2MD	DMA1MD	DMA0MD	—	—	—	—	—	—	—	SPI3MD
PMD7	—	—	—	—	—	CMP3MD	CMP2MD	CMP1MD	—	—	—	—	PTGMD	—	—	—
PMD8	—	—	OPAMPMD	SENT2MD	SENT1MD	—	—	DMTMD	—	—	CLC4MD	CLC3MD	CLC2MD	CLC1MD	BIASMD	—

© 2018-2019 Microchip Technology Inc.

NOTES:

© 2018-2019 Microchip Technology Inc.

28.0 SPECIAL FEATURES

Note: This data sheet summarizes the features of the dsPIC33CK64MP105 family of devices. It is not intended to be a comprehensive reference source. To complement the information in this data sheet, refer to the related section of the *"dsPIC33/PIC24 Family Reference Manual"*, which is available from the Microchip website (www.microchip.com).

The dsPIC33CK64MP105 family devices include several features intended to maximize application flexibility and reliability, and minimize cost through elimination of external components. These are:

- Flexible Configuration
- Watchdog Timer (WDT)
- Code Protection and CodeGuard™ Security
- JTAG Boundary Scan Interface
- In-Circuit Serial Programming™ (ICSP™)
- In-Circuit Emulation
- Brown-out Reset (BOR)

28.1 Configuration Bits

In dsPIC33CK64MP105 family devices, the Configuration Words are implemented as volatile memory. This means that configuration data will get loaded to volatile memory (from the Flash Configuration Words) each time the device is powered up. Configuration data is stored at the end of the on-chip program memory space, known as the Flash Configuration Words. Their specific locations are shown in Table 28-1. The configuration data is automatically loaded from the Flash Configuration Words to the proper Configuration Shadow registers during device Resets.

Note: Configuration data is reloaded on all types of device Resets.

When creating applications for these devices, users should always specifically allocate the location of the Flash Configuration Words for configuration data in their code for the compiler. This is to make certain that program code is not stored in this address when the code is compiled. Program code executing out of configuration space will cause a device Reset.

Note: Performing a page erase operation on the last page of program memory clears the Flash Configuration Words.

TABLE 28-1: dsPIC33CKXXMPX0X CONFIGURATION ADDRESSES

Register Name	64k	32k
FSEC	0x00AF00	0x005F00
FBSLIM	0x00AF10	0x005F10
FSIGN	0x00AF14	0x005F14
FOSCSEL	0x00AF18	0x005F18
FOSC	0x00AF1C	0x005F1C
FWDT	0x00AF20	0x005F20
FPOR	0x00AF24	0x005F24
FICD	0x00AF28	0x005F28
FDMTIVTL	0x00AF2C	0x005F2C
FDMTIVTH	0x00AF30	0x005F30
FDMTCNTL	0x00AF34	0x005F34
FDMTCNTH	0x00AF38	0x005F38
FDMT	0x00AF3C	0x005F3C
FDEVOPT	0x00AF40	0x005F40
FALTREG	0x00AF44	0x005F44

TABLE 28-2: CONFIGURATION REGISTERS MAP

Register Name	Bits 23-16	Bit 15	Bit 14	Bit 13	Bit 12	Bit 11	Bit 10	Bit 9	Bit 8	Bit 7	Bit 6	Bit 5	Bit 4	Bit 3	Bit 2	Bit 1	Bit 0
FSEC	—	AIVTDIS	—	—	—	CSS[2:0]			CWRP	GSS[1:0]		GWRP	—	BSEN	BSS[1:0]		BWRP
FBSLIM	—	—	—	—	BSLIM[12:0]												
FSIGN	—	r(2)	—	—	—	—	—	—	—	—	—	—	—	—	—	—	—
FOSCSEL	—	—	—	—	—	—	—	—	—	IESO	—	—	—	—	FNOSC[2:0]		
FOSC	—	—	—	—	XTBST	XTCFG[1:0]		—	PLLKEN	FCKSM[1:0]		—	—	—	OSCIOFCN	POSCMD[1:0]	
FWDT	—	FWDTEN	SWDTPS[4:0]					WDTWIN[1:0]		WINDIS	RCLKSEL[1:0]		RWDTPS[4:0]				
FPOR	—	—	—	—	—	—	r(1)	—	—	—	BISTDIS	r(1)	r(1)	—	—	—	—
FICD	—	—	—	—	—	—	—	—	—	r(1)	—	JTAGEN	—	—	—	ICS[1:0]	
FDMTIVTL	—	DMTIVT[15:0]															
FDMTIVTH	—	DMTIVT[31:16]															
FDMTCNTL	—	DMTCNT[15:0]															
FDMTCNTH	—	DMTCNT[31:16]															
FDMT	—	—	—	—	—	—	—	—	—	—	—	—	—	—	—	—	DMTDIS
FDEVOPT	—	—	—	SPI2PIN	—	—	SMB3EN	r(2)	r(2)	r(1)	—	—	ALTI2C2	ALTI2C1	r(1)	—	—
FALTREG	—	—	CTXT4[2:0]			—	CTXT3[2:0]			—	CTXT2[2:0]			—	CTXT1[2:0]		

Legend: — = unimplemented bit, read as '1'; r = reserved bit.

Note 1: Bit reserved, maintain as '1'.

2: Bit reserved, maintain as '0'.

© 2018-2019 Microchip Technology Inc.

REGISTER 28-1: FSEC CONFIGURATION REGISTER

U-1	U-1	U-1	U-1	U-1	U-1	U-1	U-1
—	—	—	—	—	—	—	—
bit 23							bit 16

R/PO-1	U-1	U-1	U-1	R/PO-1	R/PO-1	R/PO-1	R/PO-1
AIVTDIS	—	—	—	CSS2	CSS1	CSS0	CWRP
bit 15							bit 8

R/PO-1	R/PO-1	R/PO-1	U-1	R/PO-1	R/PO-1	R/PO-1	R/PO-1
GSS1	GSS0	GWRP	—	BSEN	BSS1	BSS0	BWRP
bit 7							bit 0

Legend:	PO = Program Once bit		
R = Readable bit	W = Writable bit	U = Unimplemented bit, read as ‘0’	
-n = Erased value	‘1’ = Bit is set	‘0’ = Bit is cleared	x = Bit is unknown

bit 23-16 **Unimplemented:** Read as ‘1’

bit 15 **AIVTDIS:** Alternate Interrupt Vector Table Disable bit
1 = Disables AIVT
0 = Enables AIVT

bit 14-12 **Unimplemented:** Read as ‘1’

bit 11-9 **CSS[2:0]:** Configuration Segment Code Flash Protection Level bits
111 = No protection (other than CWRP write protection)
110 = Standard security
10x = Enhanced security
0xx = High security

bit 8 **CWRP:** Configuration Segment Write-Protect bit
1 = Configuration Segment is not write-protected
0 = Configuration Segment is write-protected

bit 7-6 **GSS[1:0]:** General Segment Code Flash Protection Level bits
11 = No protection (other than GWRP write protection)
10 = Standard security
0x = High security

bit 5 **GWRP:** General Segment Write-Protect bit
1 = User program memory is not write-protected
0 = User program memory is write-protected

bit 4 **Unimplemented:** Read as ‘1’

bit 3 **BSEN:** Boot Segment Control bit
1 = No Boot Segment
0 = Boot Segment size is determined by BSLIM[12:0]

bit 2-1 **BSS[1:0]:** Boot Segment Code Flash Protection Level bits
11 = No protection (other than BWRP write protection)
10 = Standard security
0x = High security

bit 0 **BWRP:** Boot Segment Write-Protect bit
1 = User program memory is not write-protected
0 = User program memory is write-protected

REGISTER 28-2: FBSLIM CONFIGURATION REGISTER

U-1	U-1	U-1	U-1	U-1	U-1	U-1	U-1
—	—	—	—	—	—	—	—
bit 23							bit 16

U-1	U-1	U-1	R/PO-1	R/PO-1	R/PO-1	R/PO-1	R/PO-1
—	—	—	BSLIM[12:8](1)				
bit 15							bit 8

R/PO-1	R/PO-1	R/PO-1	R/PO-1	R/PO-1	R/PO-1	R/PO-1	R/PO-1
BSLIM[7:0](1)							
bit 7							bit 0

Legend:	PO = Program Once bit		
R = Readable bit	W = Writable bit	U = Unimplemented bit, read as ‘0’	
-n = Erased value	‘1’ = Bit is set	‘0’ = Bit is cleared	x = Bit is unknown

bit 23-13 **Unimplemented:** Read as ‘1’

bit 12-0 **BSLIM[12:0]:** Boot Segment Code Flash Page Address Limit bits(1)

Contains the page address of the first active General Segment page. The value to be programmed is the inverted page address, such that programming additional ‘0’s can only increase the Boot Segment size.

Note 1: The BSLIMx bits are a ‘write-once’ element. If, after the Reset sequence, they are not erased (all ‘1’s), then programming of the FBSLIM bits is prohibited. An attempt to do so will fail to set the WR bit (NVMCON[15]), and consequently, have no effect.

REGISTER 28-3: FSIGN CONFIGURATION REGISTER

U-1	U-1	U-1	U-1	U-1	U-1	U-1	U-1
—	—	—	—	—	—	—	—
bit 23							bit 16

r-0	U-1	U-1	U-1	U-1	U-1	U-1	U-1
—	—	—	—	—	—	—	—
bit 15							bit 8

U-1	U-1	U-1	U-1	U-1	U-1	U-1	U-1
—	—	—	—	—	—	—	—
bit 7							bit 0

Legend:	r = Reserved bit	PO = Program Once bit	
R = Readable bit	W = Writable bit	U = Unimplemented bit, read as ‘0’	
-n = Erased value	‘1’ = Bit is set	‘0’ = Bit is cleared	x = Bit is unknown

bit 23-16 **Unimplemented:** Read as ‘1’

bit 15 **Reserved:** Maintain as ‘0’

bit 14-0 **Unimplemented:** Read as ‘1’

© 2018-2019 Microchip Technology Inc.

REGISTER 28-4: FOSCSEL CONFIGURATION REGISTER

U-1	U-1	U-1	U-1	U-1	U-1	U-1	U-1
—	—	—	—	—	—	—	—
bit 23							bit 16

U-1	U-1	U-1	U-1	U-1	U-1	U-1	U-1
—	—	—	—	—	—	—	—
bit 15							bit 8

R/PO-1	U-1	U-1	U-1	U-1	R/PO-1	R/PO-1	R/PO-1
IESO	—	—	—	—	FNOSC2	FNOSC1	FNOSC0
bit 7							bit 0

Legend:	PO = Program Once bit		
R = Readable bit	W = Writable bit	U = Unimplemented bit, read as ‘0’	
-n = Erased value	‘1’ = Bit is set	‘0’ = Bit is cleared	x = Bit is unknown

bit 23-8 **Unimplemented:** Read as ‘1’

bit 7 **IESO:** Internal External Switchover bit
1 = Internal External Switchover mode is enabled (Two-Speed Start-up is enabled)
0 = Internal External Switchover mode is disabled (Two-Speed Start-up is disabled)

bit 6-3 **Unimplemented:** Read as ‘1’

bit 2-0 **FNOSC[2:0]:** Initial Oscillator Source Selection bits
111 = Internal Fast RC (FRC) Oscillator with Postscaler
110 = Backup Fast RC (BFRC)
101 = LPRC Oscillator
100 = Reserved
011 = Primary Oscillator with PLL (XTPLL, HSPLL, ECPLL)
010 = Primary (XT, HS, EC) Oscillator
001 = Internal Fast RC Oscillator with PLL (FRCPLL)
000 = Fast RC (FRC) Oscillator

REGISTER 28-5: FOSC CONFIGURATION REGISTER

U-1	U-1	U-1	U-1	U-1	U-1	U-1	U-1
—	—	—	—	—	—	—	—
bit 23							bit 16

U-1	U-1	U-1	R/PO-1	R/PO-1	R/PO-1	U-1	R/PO-1
—	—	—	XTBST	XTCFG1	XTCFG0	—	PLLKEN(1)
bit 15							bit 8

R/PO-1	R/PO-1	U-1	U-1	U-1	R/PO-1	R/PO-1	R/PO-1
FCKSM1	FCKSM0	—	—	—	OSCIOFNC	POSCMD1	POSCMD0
bit 7							bit 0

Legend:	PO = Program Once bit		
R = Readable bit	W = Writable bit	U = Unimplemented bit, read as ‘0’	
-n = Erased value	‘1’ = Bit is set	‘0’ = Bit is cleared	x = Bit is unknown

bit 23-13 **Unimplemented:** Read as ‘1’

bit 12 **XTBST:** Oscillator Kick-Start Programmability bit
1 = Boosts the kick-start
0 = Default kick-start

bit 11-10 **XTCFG[1:0]:** Crystal Oscillator Drive Select bits
Current gain programmability for oscillator (output drive).
11 = Gain3 (use for 24-32 MHz crystals)
10 = Gain2 (use for 16-24 MHz crystals)
01 = Gain1 (use for 8-16 MHz crystals)
00 = Gain0 (use for 4-8 MHz crystals)

bit 9 **Unimplemented:** Read as ‘1’

bit 8 **PLLKEN:** PLL Lock Enable bit(1)
1 = PLL clock output will be disabled if lock is lost
0 = PLL clock output will not be disabled if lock is lost

bit 7-6 **FCKSM[1:0]:** Clock Switching Mode bits
1x = Clock switching is disabled, Fail-Safe Clock Monitor is disabled
01 = Clock switching is enabled, Fail-Safe Clock Monitor is disabled
00 = Clock switching is enabled, Fail-Safe Clock Monitor is enabled

bit 5-3 **Unimplemented:** Read as ‘1’

bit 2 **OSCIOFNC:** OSCO Pin Function bit (except in XT and HS modes)
1 = OSCO is the clock output
0 = OSCO is the general purpose digital I/O pin

bit 1-0 **POSCMD[1:0]:** Primary Oscillator Mode Select bits
11 = Primary Oscillator is disabled
10 = HS Crystal Oscillator mode (10 MHz-32 MHz)
01 = XT Crystal Oscillator mode (3.5 MHz-10 MHz)
00 = EC (External Clock) mode

Note 1: A time-out period will occur when the system clock switching logic requests the PLL clock source and the PLL is not already enabled.

© 2018-2019 Microchip Technology Inc.

REGISTER 28-6: FWDT CONFIGURATION REGISTER

U-1	U-1	U-1	U-1	U-1	U-1	U-1	U-1
—	—	—	—	—	—	—	—
bit 23							bit 16

R/PO-1	R/PO-1	R/PO-1	R/PO-1	R/PO-1	R/PO-1	R/PO-1	R/PO-1
FWDTEN	SWDTPS4	SWDTPS3	SWDTPS2	SWDTPS1	SWDTPS0	WDTWIN1	WDTWIN0
bit 15							bit 8

R/PO-1	R/PO-1	R/PO-1	R/PO-1	R/PO-1	R/PO-1	R/PO-1	R/PO-1
WINDIS	RCLKSEL1	RCLKSEL0	RWDTPS4	RWDTPS3	RWDTPS2	RWDTPS1	RWDTPS0
bit 7							bit 0

Legend:	PO = Program Once bit		
R = Readable bit	W = Writable bit	U = Unimplemented bit, read as ‘0’	
-n = Erased value	‘1’ = Bit is set	‘0’ = Bit is cleared	x = Bit is unknown

bit 23-16 **Unimplemented:** Read as ‘1’

bit 15 **FWDTEN:** Watchdog Timer Enable bit
1 = WDT is enabled in hardware
0 = WDT controller via the ON bit (WDTCONL[15])

bit 14-10 **SWDTPS[4:0]:** Sleep Mode Watchdog Timer Period Select bits
11111 = Divide by 2^{31} = 2,147,483,648
11110 = Divide by 2^{30} = 1,073,741,824
...
00001 = Divide by 2^1 = 2
00000 = Divide by 2^0 = 1

bit 9-8 **WDTWIN[1:0]:** Watchdog Timer Window Select bits
11 = WDT window is 25% of the WDT period
10 = WDT window is 37.5% of the WDT period
01 = WDT window is 50% of the WDT period
00 = WDT Window is 75% of the WDT period

bit 7 **WINDIS:** Watchdog Timer Window Enable bit
1 = Watchdog Timer is in Non-Window mode
0 = Watchdog Timer is in Window mode

bit 6-5 **RCLKSEL[1:0]:** Watchdog Timer Clock Select bits
11 = LPRC clock
10 = Uses FRC when WINDIS = 0, system clock is not INTOSC/LPRC and device is not in Sleep; otherwise, uses INTOSC/LPRC
01 = Uses peripheral clock when system clock is not INTOSC/LPRC and device is not in Sleep; otherwise, uses INTOSC/LPRC
00 = Reserved

bit 4-0 **RWDTPS[4:0]:** Run Mode Watchdog Timer Period Select bits
11111 = Divide by 2^{31} = 2,147,483,648
11110 = Divide by 2^{30} = 1,073,741,824
...
00001 = Divide by 2^1 = 2
00000 = Divide by 2^0 = 1

REGISTER 28-7: FPOR CONFIGURATION REGISTER

U-1	U-1	U-1	U-1	U-1	U-1	U-1	U-1
—	—	—	—	—	—	—	—
bit 23							bit 16

U-1	U-1	U-1	U-1	U-1	r-1	U-1	U-1
—	—	—	—	—	—	—	—
bit 15							bit 8

U-1	R/PO-1(1)	r-1	r-1	U-1	U-1	U-1	U-1
—	BISTDIS	—	—	—	—	—	—
bit 7							bit 0

Legend:	PO = Program Once bit	r = Reserved bit	
R = Readable bit	W = Writable bit	U = Unimplemented bit, read as ‘0’	
-n = Erased value	‘1’ = Bit is set	‘0’ = Bit is cleared	x = Bit is unknown

bit 23-11 **Unimplemented:** Read as ‘1’

bit 10 **Reserved:** Maintain as ‘1’

bit 9-7 **Unimplemented:** Read as ‘1’

bit 6 **BISTDIS:** Memory BIST Feature Disable bit(1)
1 = MBIST on Reset feature is disabled
0 = MBIST on Reset feature is enabled

bit 5-4 **Reserved:** Maintain as ‘0b11’

bit 3-0 **Unimplemented:** Read as ‘1’

Note 1: Applies to a Power-on Reset (POR) only.

© 2018-2019 Microchip Technology Inc.

REGISTER 28-8: FICD CONFIGURATION REGISTER

U-1	U-1	U-1	U-1	U-1	U-1	U-1	U-1
—	—	—	—	—	—	—	—
bit 23							bit 16

U-1	U-1	U-1	U-1	U-1	U-1	U-1	U-1
—	—	—	—	—	—	—	—
bit 15							bit 8

r-1	U-1	R/PO-1	U-1	U-1	U-1	R/PO-1	R/PO-1
—	—	JTAGEN	—	—	—	ICS1	ICS0
bit 7							bit 0

Legend:	PO = Program Once bit	r = Reserved bit	
R = Readable bit	W = Writable bit	U = Unimplemented bit, read as ‘0’	
-n = Erased value	‘1’ = Bit is set	‘0’ = Bit is cleared	x = Bit is unknown

bit 23-8 **Unimplemented:** Read as ‘1’

bit 7 **Reserved:** Maintain as ‘1’

bit 6 **Unimplemented:** Read as ‘1’

bit 5 **JTAGEN:** JTAG Enable bit
1 = JTAG port is enabled
0 = JTAG port is disabled

bit 4-2 **Unimplemented:** Read as ‘1’

bit 1-0 **ICS[1:0]:** ICD Communication Channel Select bits
11 = Communicates on PGC1 and PGD1
10 = Communicates on PGC2 and PGD2
01 = Communicates on PGC3 and PGD3
00 = Reserved, do not use

REGISTER 28-9: FDMTIVTL CONFIGURATION REGISTER

U-1	U-1	U-1	U-1	U-1	U-1	U-1	U-1
—	—	—	—	—	—	—	—
bit 23							bit 16

R/PO-1	R/PO-1	R/PO-1	R/PO-1	R/PO-1	R/PO-1	R/PO-1	R/PO-1
DMTIVT[15:8]							
bit 15							bit 8

R/PO-1	R/PO-1	R/PO-1	R/PO-1	R/PO-1	R/PO-1	R/PO-1	R/PO-1
DMTIVT[7:0]							
bit 7							bit 0

Legend:	PO = Program Once bit		
R = Readable bit	W = Writable bit	U = Unimplemented bit, read as ‘0’	
-n = Erased value	‘1’ = Bit is set	‘0’ = Bit is cleared	x = Bit is unknown

bit 23-16 **Unimplemented:** Read as ‘1’

bit 15-0 **DMTIVT[15:0]:** DMT Window Interval Lower 16 bits

REGISTER 28-10: FDMTIVTH CONFIGURATION REGISTER

U-1	U-1	U-1	U-1	U-1	U-1	U-1	U-1
—	—	—	—	—	—	—	—
bit 23							bit 16

R/PO-1	R/PO-1	R/PO-1	R/PO-1	R/PO-1	R/PO-1	R/PO-1	R/PO-1
DMTIVT[31:24]							
bit 15							bit 8

R/PO-1	R/PO-1	R/PO-1	R/PO-1	R/PO-1	R/PO-1	R/PO-1	R/PO-1
DMTIVT[23:16]							
bit 7							bit 0

Legend:	PO = Program Once bit		
R = Readable bit	W = Writable bit	U = Unimplemented bit, read as ‘0’	
-n = Erased value	‘1’ = Bit is set	‘0’ = Bit is cleared	x = Bit is unknown

bit 23-16 **Unimplemented:** Read as ‘1’

bit 15-0 **DMTIVT[31:16]:** DMT Window Interval Higher 16 bits

© 2018-2019 Microchip Technology Inc.

REGISTER 28-11: FDMTCNTL CONFIGURATION REGISTER

U-1	U-1	U-1	U-1	U-1	U-1	U-1	U-1
—	—	—	—	—	—	—	—
bit 23							bit 16

R/PO-1	R/PO-1	R/PO-1	R/PO-1	R/PO-1	R/PO-1	R/PO-1	R/PO-1
DMTCNT[15:8]							
bit 15							bit 8

R/PO-1	R/PO-1	R/PO-1	R/PO-1	R/PO-1	R/PO-1	R/PO-1	R/PO-1
DMTCNT[7:0]							
bit 7							bit 0

Legend:	PO = Program Once bit		
R = Readable bit	W = Writable bit	U = Unimplemented bit, read as ‘0’	
-n = Erased value	‘1’ = Bit is set	‘0’ = Bit is cleared	x = Bit is unknown

bit 23-16 **Unimplemented:** Read as ‘1’

bit 15-0 **DMTCNT[15:0]:** DMT Instruction Count Time-out Value Lower 16 bits

REGISTER 28-12: FDMTCNTH CONFIGURATION REGISTER

U-1	U-1	U-1	U-1	U-1	U-1	U-1	U-1
—	—	—	—	—	—	—	—
bit 23							bit 16

R/PO-1	R/PO-1	R/PO-1	R/PO-1	R/PO-1	R/PO-1	R/PO-1	R/PO-1
DMTCNT[31:24]							
bit 15							bit 8

R/PO-1	R/PO-1	R/PO-1	R/PO-1	R/PO-1	R/PO-1	R/PO-1	R/PO-1
DMTCNT[23:16]							
bit 7							bit 0

Legend:	PO = Program Once bit		
R = Readable bit	W = Writable bit	U = Unimplemented bit, read as ‘0’	
-n = Erased value	‘1’ = Bit is set	‘0’ = Bit is cleared	x = Bit is unknown

bit 23-16 **Unimplemented:** Read as ‘1’

bit 15-0 **DMTCNT[31:16]:** DMT Instruction Count Time-out Value Upper 16 bits

REGISTER 28-13: FDMT CONFIGURATION REGISTER

U-1	U-1	U-1	U-1	U-1	U-1	U-1	U-1
—	—	—	—	—	—	—	—
bit 23							bit 16

U-1	U-1	U-1	U-1	U-1	U-1	U-1	U-1
—	—	—	—	—	—	—	—
bit 15							bit 8

U-1	U-1	U-1	U-1	U-1	U-1	U-1	R/PO-1
—	—	—	—	—	—	—	DMTDIS
bit 7							bit 0

Legend:	PO = Program Once bit		
R = Readable bit	W = Writable bit	U = Unimplemented bit, read as ‘0’	
-n = Erased value	‘1’ = Bit is set	‘0’ = Bit is cleared	x = Bit is unknown

bit 23-1 **Unimplemented:** Read as ‘1’

bit 0 **DMTDIS:** DMT Disable bit
1 = DMT is disabled
0 = DMT is enabled

© 2018-2019 Microchip Technology Inc.

REGISTER 28-14: FDEVOPT CONFIGURATION REGISTER

U-1	U-1	U-1	U-1	U-1	U-1	U-1	U-1
—	—	—	—	—	—	—	—
bit 23							bit 16

U-1	U-1	R/PO-1	U-1	U-1	R/PO-1	r-0	r-0
—	—	SPI2PIN(1)	—	—	SMB3EN(2)	—	—
bit 15							bit 8

r-1	U-1	U-1	R/PO-1	R/PO-1	r-1	U-1	U-1
—	—	—	ALTI2C2	ALTI2C1	—	—	—
bit 7							bit 0

Legend:	PO = Program Once bit	r = Reserved bit	
R = Readable bit	W = Writable bit	U = Unimplemented bit, read as ‘0’	
-n = Erased value	‘1’ = Bit is set	‘0’ = Bit is cleared	x = Bit is unknown

bit 23-14 **Unimplemented:** Read as ‘1’

bit 13 **SPI2PIN:** Master SPI #2 Fast I/O Pad Disable bit(1)
1 = Master SPI2 uses PPS (I/O remap) to make connections with device pins
0 = Master SPI2 uses direct connections with specified device pins

bit 12-11 **Unimplemented:** Read as ‘1’

bit 10 **SMB3EN:** SMBus 3.0 Levels Enable bit(2)
1 = SMBus 3.0 input levels
0 = Normal SMBus input levels

bit 9-8 **Reserved:** Maintain as ‘0’

bit 7 **Reserved:** Maintain as ‘1’

bit 6-5 **Unimplemented:** Read as ‘1’

bit 4 **ALTI2C2:** Alternate I2C2 Pin Mapping bit
1 = Default location for SCL2/SDA2 pins
0 = Alternate location for SCL2/SDA2 pins (ASCL2/ASDA2)

bit 3 **ALTI2C1:** Alternate I2C1 Pin Mapping bit
1 = Default location for SCL1/SDA1 pins
0 = Alternate location for SCL1/SDA1 pins (ASCL1/ASDA1)

bit 2 **Reserved:** Maintain as ‘1’

bit 1-0 **Unimplemented:** Read as ‘1’

Note 1: Fixed pin option is only available for 48-pin packages.
2: SMBus mode is enabled by the SMEN bit (I2CxCONL[8]).

REGISTER 28-15: FALTREG CONFIGURATION REGISTER

U-1	U-1	U-1	U-1	U-1	U-1	U-1	U-1
—	—	—	—	—	—	—	—
bit 23							bit 16

U-1	R/PO-1	R/PO-1	R/PO-1	U-1	R/PO-1	R/PO-1	R/PO-1
—	CTXT4[2:0]			—	CTXT3[2:0]		
bit 15							bit 8

U-1	R/PO-1	R/PO-1	R/PO-1	U-1	R/PO-1	R/PO-1	R/PO-1
—	CTXT2[2:0]			—	CTXT1[2:0]		
bit 7							bit 0

Legend:	PO = Program Once bit		
R = Readable bit	W = Writable bit	U = Unimplemented bit, read as ‘0’	
-n = Erased value	‘1’ = Bit is set	‘0’ = Bit is cleared	x = Bit is unknown

bit 23-15 **Unimplemented:** Read as ‘1’

bit 14-12 **CTXT4[2:0]:** Specifies the Alternate Working Register Set #4 with Interrupt Priority Levels (IPL) bits
111 = Not assigned
110 = Alternate Register Set #4 is assigned to IPL Level 7
101 = Alternate Register Set #4 is assigned to IPL Level 6
100 = Alternate Register Set #4 is assigned to IPL Level 5
011 = Alternate Register Set #4 is assigned to IPL Level 4
010 = Alternate Register Set #4 is assigned to IPL Level 3
001 = Alternate Register Set #4 is assigned to IPL Level 2
000 = Alternate Register Set #4 is assigned to IPL Level 1

bit 11 **Unimplemented:** Read as ‘1’

bit 10-8 **CTXT3[2:0]:** Specifies the Alternate Working Register Set #3 with Interrupt Priority Levels (IPL) bits
111 = Not assigned
110 = Alternate Register Set #3 is assigned to IPL Level 7
101 = Alternate Register Set #3 is assigned to IPL Level 6
100 = Alternate Register Set #3 is assigned to IPL Level 5
011 = Alternate Register Set #3 is assigned to IPL Level 4
010 = Alternate Register Set #3 is assigned to IPL Level 3
001 = Alternate Register Set #3 is assigned to IPL Level 2
000 = Alternate Register Set #3 is assigned to IPL Level 1

bit 7 **Unimplemented:** Read as ‘1’

bit 6-4 **CTXT2[2:0]:** Specifies the Alternate Working Register Set #2 with Interrupt Priority Levels (IPL) bits
111 = Not assigned
110 = Alternate Register Set #2 is assigned to IPL Level 7
101 = Alternate Register Set #2 is assigned to IPL Level 6
100 = Alternate Register Set #2 is assigned to IPL Level 5
011 = Alternate Register Set #2 is assigned to IPL Level 4
010 = Alternate Register Set #2 is assigned to IPL Level 3
001 = Alternate Register Set #2 is assigned to IPL Level 2
000 = Alternate Register Set #2 is assigned to IPL Level 1

bit 3 **Unimplemented:** Read as ‘1’

© 2018-2019 Microchip Technology Inc.

REGISTER 28-15: FALTREG CONFIGURATION REGISTER (CONTINUED)

bit 2-0 **CTXT1[2:0]:** Specifies the Alternate Working Register Set #1 with Interrupt Priority Levels (IPL) bits

`111` = Not assigned
`110` = Alternate Register Set #1 is assigned to IPL Level 7
`101` = Alternate Register Set #1 is assigned to IPL Level 6
`100` = Alternate Register Set #1 is assigned to IPL Level 5
`011` = Alternate Register Set #1 is assigned to IPL Level 4
`010` = Alternate Register Set #1 is assigned to IPL Level 3
`001` = Alternate Register Set #1 is assigned to IPL Level 2
`000` = Alternate Register Set #1 is assigned to IPL Level 1

28.2 Device Identification

The dsPIC33CK64MP105 devices have two Identification registers, near the end of configuration memory space, that store the Device ID (DEVID) and Device Revision (DEVREV). These registers are used to determine the mask, variant and manufacturing information about the device. These registers are read-only and are shown in Register 28-16 and Register 28-17.

REGISTER 28-16: DEVREV: DEVICE REVISION REGISTER

U-0	U-0	U-0	U-0	U-0	U-0	U-0	U-0
—	—	—	—	—	—	—	—
bit 23							bit 16

U-0	U-0	U-0	U-0	U-0	U-0	U-0	U-0
—	—	—	—	—	—	—	—
bit 15							bit 8

U-0	U-0	U-0	U-0	R	R	R	R
—	—	—	—	DEVREV[3:0]			
bit 7							bit 0

Legend:			
R = Read-Only bit	W = Writable bit	U = Unimplemented bit, read as ‘0’	
-n = Value at POR	‘1’ = Bit is set	‘0’ = Bit is cleared	x = Bit is unknown

bit 23-4 **Unimplemented:** Read as ‘0’

bit 3-0 **DEVREV[3:0]:** Device Revision bits

© 2018-2019 Microchip Technology Inc.

REGISTER 28-17: DEVID: DEVICE ID REGISTERS

U-0	U-0	U-0	U-0	U-0	U-0	U-0	U-0
—	—	—	—	—	—	—	—
bit 23							bit 16

R-1	R-0	R-0	R-0	R-1	R-1	R-1	R-0
FAMID7	FAMID6	FAMID5	FAMID4	FAMID3	FAMID2	FAMID1	FAMID0
bit 15							bit 8

R	R	R	R	R	R	R	R
DEV7(1)	DEV6(1)	DEV5(1)	DEV4(1)	DEV3(1)	DEV2(1)	DEV1(1)	DEV0(1)
bit 7							bit 0

Legend:			
R = Read-Only bit	W = Writable bit	U = Unimplemented bit, read as ‘0’	
-n = Value at POR	‘1’ = Bit is set	‘0’ = Bit is cleared	x = Bit is unknown

bit 23-16 **Unimplemented:** Read as ‘0’

bit 15-8 **FAMID[7:0]:** Device Family Identifier bits
`1000 1110` = dsPIC33CK64MP105 family

bit 7-0 **DEV[7:0]:** Individual Device Identifier bits(1)

Note 1: See Table 28-3 for the list of Device Identifier bits.

TABLE 28-3: DEVICE IDs FOR THE dsPIC33CK64MP105 FAMILY

Device	DEVID
dsPIC33CK64MP105	0x8E12
dsPIC33CK64MP103	0x8E11
dsPIC33CK64MP102	0x8E10
dsPIC33CK32MP105	0x8E02
dsPIC33CK32MP103	0x8E01
dsPIC33CK32MP102	0x8E00

28.3 User OTP Memory

The dsPIC33CK64MP105 family devices contain 64 One-Time-Programmable (OTP) double words, located at addresses, 801700h through 8017FEh. Each 48-bit OTP double word can only be written one time. The OTP Words can be used for storing checksums, code revisions, manufacturing dates, manufacturing lot numbers or any other application-specific information.

The OTP area is not cleared by any erase command. This memory can be written only once.

28.4 On-Chip Voltage Regulator

The dsPIC33CK64MP105 family devices have a capacitorless internal voltage regulator to supply power to the core at 1.2V (typical). The voltage regulator, VREG, provides power for the core. The PLL is powered using a separate regulator, VREGPLL, as shown in Figure 28-1. The regulators have Low-Power and Standby modes for use in Sleep modes. For additional information about Sleep, see **Section 27.2.1 "Sleep Mode"**.

When the regulators are in Low-Power mode (LPWREN = `1`), the power available to the core is limited.

Before the LPWREN bit is set, the device should be placed into a lower power state by disabling peripherals and lowering CPU frequency (e.g., 8 MHz FRC without PLL). The output voltages of the two regulators can be controlled independently by the user, which gives the capability to save additional power during Sleep mode.

FIGURE 28-1: INTERNAL REGULATOR

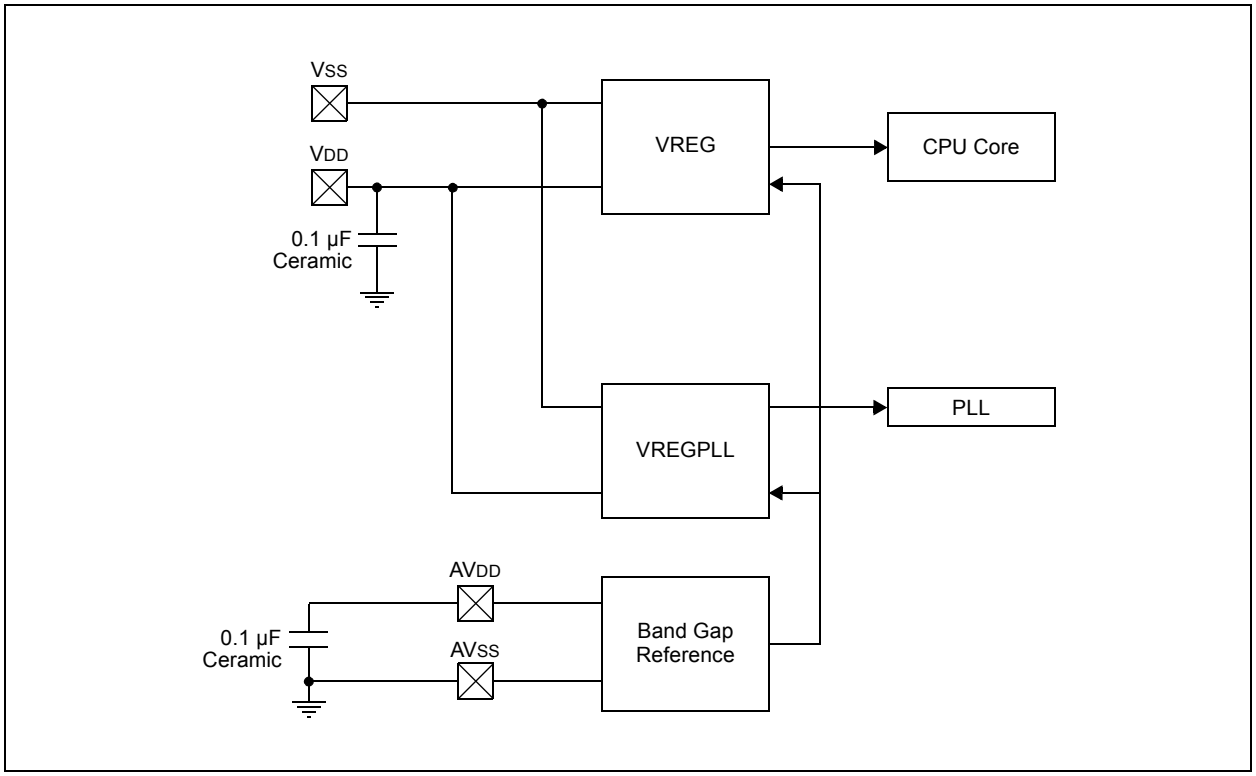

© 2018-2019 Microchip Technology Inc.

REGISTER 28-18: VREGCON: VOLTAGE REGULATOR CONTROL REGISTER

R/W-0	U-0	U-0	U-0	U-0	U-0	U-0	U-0
LPWREN(1)	—	—	—	—	—	—	—
bit 15							bit 8

U-0	U-0	R/W-0	R/W-0	U-0	U-0	R/W-0	R/W-0
—	—	VREG3OV1	VREG3OV0	—	—	VREG1OV1	VREG1OV0
bit 7							bit 0

Legend:			
R = Readable bit	W = Writable bit	U = Unimplemented bit, read as ‘0’	
-n = Value at POR	‘1’ = Bit is set	‘0’ = Bit is cleared	x = Bit is unknown

bit 15 **LPWREN:** Low-Power Mode Enable bit(1)
`1` = Voltage regulators are in Low-Power mode
`0` = Voltage regulators are in Full Power mode

bit 14-6 **Unimplemented:** Read as ‘`0`’

bit 5-4 **VREG3OV[1:0]:** VREGPLL Voltage Control bits
`11/00` = V_{OUT} = 1.5 * V_{BG} = 1.2V
`10` = V_{OUT} = 1.25 * V_{BG} = 1.0V
`01` = V_{OUT} = V_{BG} = 0.8V

bit 3-2 **Unimplemented:** Read as ‘`0`’

bit 1-0 **VREG1OV[1:0]:** VREG Voltage Control bits
`11/00` = V_{OUT} = 1.5 * V_{BG} = 1.2V
`10` = V_{OUT} = 1.25 * V_{BG} = 1.0V
`01` = V_{OUT} = V_{BG} = 0.8V

Note 1: Low-Power mode can only be used within the industrial temperature range. The CPU should be run at slow speed (8 MHz or less) before setting this bit.

28.5 Brown-out Reset (BOR)

The Brown-out Reset (BOR) module is based on an internal voltage reference circuit that monitors the regulated supply voltage. The main purpose of the BOR module is to generate a device Reset when a brown-out condition occurs. Brown-out conditions are generally caused by glitches on the AC mains (for example, missing portions of the AC cycle waveform due to bad power transmission lines or voltage sags due to excessive current draw when a large inductive load is turned on).

A BOR generates a Reset pulse which resets the device. The BOR selects the clock source based on the device Configuration bit selections.

If an oscillator mode is selected, the BOR activates the Oscillator Start-up Timer (OST). The system clock is held until OST expires. If the PLL is used, the clock is held until the LOCK bit (OSCCON[5]) is '1'.

Concurrently, the PWRT Time-out (T_{PWRT}) is applied before the internal Reset is released. If T_{PWRT} = 0 and a crystal oscillator is being used, then a nominal delay of T_{FSCM} is applied. The total delay in this case is T_{FSCM}. Refer to Parameter SY35 in Table 31-26 of **Section 31.0 "Electrical Characteristics"** for specific T_{FSCM} values.

The BOR status bit (RCON[1]) is set to indicate that a BOR has occurred. The BOR circuit continues to operate while in Sleep or Idle mode and resets the device should V_{DD} fall below the BOR threshold voltage.

© 2018-2019 Microchip Technology Inc.

28.6 Dual Watchdog Timer (WDT)

Note 1: This data sheet summarizes the features of the dsPIC33CK64MP105 family of devices. It is not intended to be a comprehensive reference source. To complement the information in this data sheet, refer to **"Dual Watchdog Timer"**, (www.microchip.com/DS70005250) in the *"dsPIC33/PIC24 Family Reference Manual"*.

The dsPIC33 dual Watchdog Timer (WDT) is described in this section. Refer to Figure 28-2 for a block diagram of the WDT.

The WDT, when enabled, operates from the internal Low-Power RC (LPRC) Oscillator clock source or a selectable clock source in Run mode. The WDT can be used to detect system software malfunctions by resetting the device if the WDT is not cleared periodically in software. The WDT can be configured in Windowed mode or Non-Windowed mode. Various WDT time-out periods can be selected using the WDT postscaler. The WDT can also be used to wake the device from Sleep or Idle mode (Power Save mode). If the WDT expires and issues a device Reset, the WTDO bit in RCON (Register 6-1) will be set.

The following are some of the key features of the WDT modules:

- Configuration or Software Controlled
- Separate User-Configurable Time-out Periods for Run and Sleep/Idle
- Can Wake the Device from Sleep or Idle
- User-Selectable Clock Source in Run mode
- Operates from LPRC in Sleep/Idle mode

FIGURE 28-2: WATCHDOG TIMER BLOCK DIAGRAM

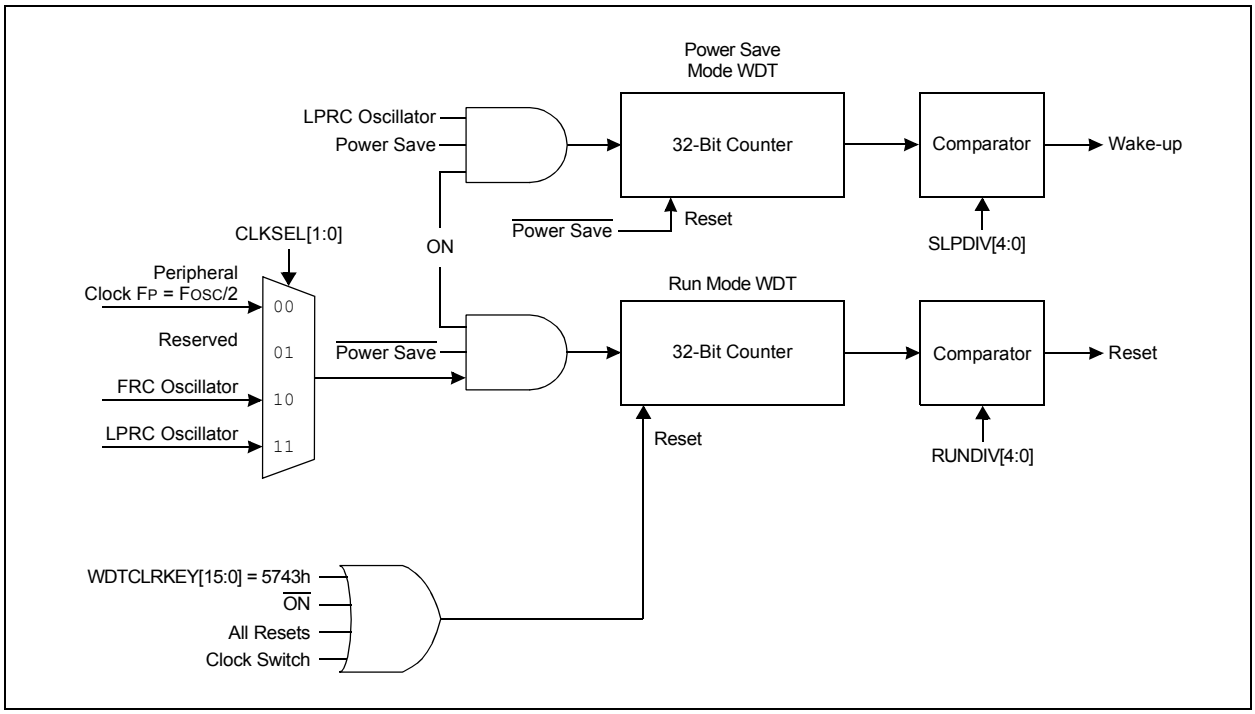

REGISTER 28-19: WDTCONL: WATCHDOG TIMER CONTROL REGISTER LOW

R/W-0	U-0	U-0	R-y	R-y	R-y	R-y	R-y
ON(1,2)	—	—	RUNDIV4(3)	RUNDIV3(3)	RUNDIV2(3)	RUNDIV1(3)	RUNDIV0(3)
bit 15							bit 8

R	R	R-y	R-y	R-y	R-y	R-y	HS/R/W-0
CLKSEL1(3,5)	CLKSEL0(3,5)	SLPDIV4(3)	SLPDIV3(3)	SLPDIV2(3)	SLPDIV1(3)	SLPDIV0(3)	WDTWINEN(4)
bit 7							bit 0

Legend:	HS = Hardware Settable bit	y = Value from Configuration bit on POR	
R = Readable bit	W = Writable bit	U = Unimplemented bit, read as ‘0’	
-n = Value at POR	‘1’ = Bit is set	‘0’ = Bit is cleared	x = Bit is unknown

bit 15 **ON:** Watchdog Timer Enable bit(1,2)
`1` = Enables the Watchdog Timer if it is not enabled by the device configuration
`0` = Disables the Watchdog Timer if it was enabled in software

bit 14-13 **Unimplemented:** Read as ‘`0`’

bit 12-8 **RUNDIV[4:0]:** Sleep and Idle Mode WDT Postscaler Status bits(3)
`11111` = Divide by 2^{31} = 2,147,483,648
`11110` = Divide by 2^{30} = 1,073,741,824
`...`
`00001` = Divide by 2^{1} = 2
`00000` = Divide by 2^{0} = 1

bit 7-6 **CLKSEL[1:0]:** WDT Run Mode Clock Select Status bits(3,5)
`11` = LPRC Oscillator
`10` = FRC Oscillator
`01` = Reserved
`00` = SYSCLK

bit 5-1 **SLPDIV[4:0]:** Sleep and Idle Mode WDT Postscaler Status bits(3)
`11111` = Divide by 2^{31} = 2,147,483,648
`11110` = Divide by 2^{30} = 1,073,741,824
`...`
`00001` = Divide by 2^{1} = 2
`00000` = Divide by 2^{0} = 1

bit 0 **WDTWINEN:** Watchdog Timer Window Enable bit(4)
`1` = Enables Window mode
`0` = Disables Window mode

Note 1: A read of this bit will result in a ‘`1`’ if the WDT is enabled by the device configuration or by software.
2: The user’s software should not read or write the peripheral’s SFRs immediately following the instruction that clears the module’s ON bit.
3: These bits reflect the value of the Configuration bits.
4: The WDTWINEN bit reflects the status of the Configuration bit if the bit is set. If the bit is cleared, the value is controlled by software.
5: The available clock sources are device-dependent.

© 2018-2019 Microchip Technology Inc.

REGISTER 28-20: WDTCONH: WATCHDOG TIMER CONTROL REGISTER HIGH

W-0	W-0	W-0	W-0	W-0	W-0	W-0	W-0
WDTCLRKEY[15:8]							
bit 15							bit 8

W-0	W-0	W-0	W-0	W-0	W-0	W-0	W-0
WDTCLRKEY[7:0]							
bit 7							bit 0

Legend:			
R = Readable bit	W = Writable bit	U = Unimplemented bit, read as ‘0’	
-n = Value at POR	‘1’ = Bit is set	‘0’ = Bit is cleared	x = Bit is unknown

bit 15-0 **WDTCLRKEY[15:0]:** Watchdog Timer Clear Key bits

To clear the Watchdog Timer to prevent a time-out, software must write the value, 0x5743, to this location using a single 16-bit write.

28.7 JTAG Interface

The dsPIC33CK64MP105 family devices implement a JTAG interface, which supports boundary scan device testing. Detailed information on this interface will be provided in future revisions of this document.

Note: Refer to **"Programming and Diagnostics"** (www.microchip.com/DS70608) in the *"dsPIC33/PIC24 Family Reference Manual"* for further information on usage, configuration and operation of the JTAG interface.

28.8 In-Circuit Serial Programming™ (ICSP™)

The dsPIC33CK64MP105 family devices can be serially programmed while in the end application circuit. This is done with two lines for clock and data, and three other lines for power, ground and the programming sequence. Serial programming allows customers to manufacture boards with unprogrammed devices and then program the device just before shipping the product. Serial programming also allows the most recent firmware or a custom firmware to be programmed. Refer to the *"dsPIC33CK64MP105 Family Flash Programming Specification"* (DS70005352) for details about In-Circuit Serial Programming (ICSP).

Any of the three pairs of programming clock/data pins can be used:

- PGC1 and PGD1
- PGC2 and PGD2
- PGC3 and PGD3

28.9 In-Circuit Debugger

When the MPLAB® tool is selected as a debugger, the in-circuit debugging functionality is enabled. This function allows simple debugging functions when used with MPLAB IDE. Debugging functionality is controlled through the PGCx (Emulation/Debug Clock) and PGDx (Emulation/Debug Data) pin functions.

Any of the three pairs of debugging clock/data pins can be used:

- PGC1 and PGD1
- PGC2 and PGD2
- PGC3 and PGD3

To use the in-circuit debugger function of the device, the design must implement ICSP connections to $\overline{\text{MCLR}}$, VDD, VSS and the PGCx/PGDx pin pair. In addition, when the feature is enabled, some of the resources are not available for general use. These resources include the first 80 bytes of data RAM and two I/O pins (PGCx and PGDx).

© 2018-2019 Microchip Technology Inc.

28.10 Code Protection and CodeGuard™ Security

dsPIC33CK64MP105 family devices offer multiple levels of security for protecting individual intellectual property. The program Flash protection can be broken up into three segments: Boot Segment (BS), General Segment (GS) and Configuration Segment (CS). Boot Segment has the highest security privilege and can be thought to have limited restrictions when accessing other segments. General Segment has the least security and is intended for the end user system code. Configuration Segment contains only the device user configuration data, which is located at the end of the program memory space.

The code protection features are controlled by the Configuration registers, FSEC and FBSLIM. The FSEC register controls the code-protect level for each segment and if that segment is write-protected. The size of BS and GS will depend on the BSLIM[12:0] bits setting and if the Alternate Interrupt Vector Table (AIVT) is enabled. The BSLIM[12:0] bits define the number of pages for BS with each page containing 1024 IW. The smallest BS size is one page, which will consist of the Interrupt Vector Table (IVT) and 512 IW of code protection.

If the AIVT is enabled, the last page of BS will contain the AIVT and will not contain any BS code. With AIVT enabled, the smallest BS size is now two pages (2048 IW), with one page for the IVT and BS code, and the other page for the AIVT. Write protection of the BS does not cover the AIVT. The last page of BS can always be programmed or erased by BS code. The General Segment will start at the next page and will consume the rest of program Flash, except for the Flash Configuration Words. The IVT will assume GS security only if BS is not enabled. The IVT is protected from being programmed or page erased when either security segment has enabled write protection.

The different device security segments are shown in Figure 28-3. Here, all three segments are shown, but are not required. If only basic code protection is required, then GS can be enabled independently or combined with CS, if desired.

FIGURE 28-3: SECURITY SEGMENTS EXAMPLE

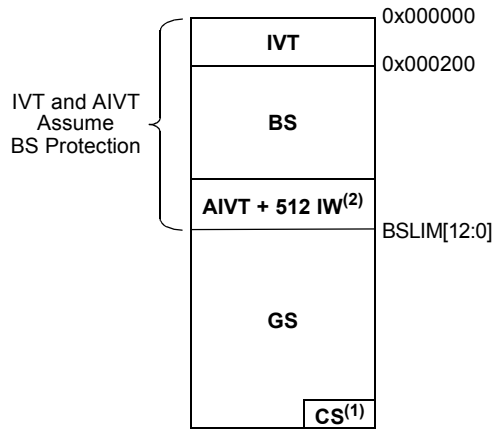

Note 1: If CS is write-protected, the last page (GS + CS) of program memory will be protected from an erase condition.

2: The last half (256 IW) of the last page of BS is unusable program memory.

NOTES:

© 2018-2019 Microchip Technology Inc.

29.0 INSTRUCTION SET SUMMARY

Note: This data sheet summarizes the features of the dsPIC33CK64MP105 family of devices. It is not intended to be a comprehensive reference source. To complement the information in this data sheet, refer to the *"16-Bit MCU and DSC Programmer's Reference Manual"* (www.microchip.com/DS70000157), which is available from the Microchip website (www.microchip.com).

The dsPIC33CK64MP105 family instruction set is almost identical to that of the dsPIC30F and dsPIC33F.

Most instructions are a single program memory word (24 bits). Only three instructions require two program memory locations.

Each single-word instruction is a 24-bit word, divided into an 8-bit opcode, which specifies the instruction type and one or more operands, which further specify the operation of the instruction.

The instruction set is highly orthogonal and is grouped into five basic categories:

- Word or byte-oriented operations
- Bit-oriented operations
- Literal operations
- DSP operations
- Control operations

Table 29-1 lists the general symbols used in describing the instructions.

The dsPIC33 instruction set summary in Table 29-2 lists all the instructions, along with the status flags affected by each instruction.

Most word or byte-oriented W register instructions (including barrel shift instructions) have three operands:

- The first source operand, which is typically a register 'Wb' without any address modifier
- The second source operand, which is typically a register 'Ws' with or without an address modifier
- The destination of the result, which is typically a register 'Wd' with or without an address modifier

However, word or byte-oriented file register instructions have two operands:

- The file register specified by the value 'f'
- The destination, which could be either the file register 'f' or the W0 register, which is denoted as 'WREG'

Most bit-oriented instructions (including simple rotate/shift instructions) have two operands:

- The W register (with or without an address modifier) or file register (specified by the value of 'Ws' or 'f')
- The bit in the W register or file register (specified by a literal value or indirectly by the contents of register 'Wb')

The literal instructions that involve data movement can use some of the following operands:

- A literal value to be loaded into a W register or file register (specified by 'k')
- The W register or file register where the literal value is to be loaded (specified by 'Wb' or 'f')

However, literal instructions that involve arithmetic or logical operations use some of the following operands:

- The first source operand, which is a register 'Wb' without any address modifier
- The second source operand, which is a literal value
- The destination of the result (only if not the same as the first source operand), which is typically a register 'Wd' with or without an address modifier

The `MAC` class of DSP instructions can use some of the following operands:

- The accumulator (A or B) to be used (required operand)
- The W registers to be used as the two operands
- The X and Y address space prefetch operations
- The X and Y address space prefetch destinations
- The accumulator write-back destination

The other DSP instructions do not involve any multiplication and can include:

- The accumulator to be used (required)
- The source or destination operand (designated as Wso or Wdo, respectively) with or without an address modifier
- The amount of shift specified by a W register 'Wn' or a literal value

The control instructions can use some of the following operands:

- A program memory address
- The mode of the Table Read and Table Write instructions

Most instructions are a single word. Certain double-word instructions are designed to provide all the required information in these 48 bits. In the second word, the 8 MSbs are '0's. If this second word is executed as an instruction (by itself), it executes as a NOP.

The double-word instructions execute in two instruction cycles.

Most single-word instructions are executed in a single instruction cycle, unless a conditional test is true or the Program Counter is changed as a result of the instruction, or a PSV or Table Read is performed. In these cases, the execution takes multiple instruction cycles, with the additional instruction cycle(s) executed as a NOP. Certain instructions that involve skipping over the subsequent instruction require either two or three cycles if the skip is performed, depending on whether the instruction being skipped is a single-word or two-word instruction. Moreover, double-word moves require two cycles.

Note: In dsPIC33CK64MP105 devices, read and Read-Modify-Write operations on non-CPU Special Function Registers require an additional cycle when compared to dsPIC30F, dsPIC33F, PIC24F and PIC24H devices.

Note: For more details on the instruction set, refer to the *"16-Bit MCU and DSC Programmer's Reference Manual"* (www.microchip.com/DS70000157).

TABLE 29-1: SYMBOLS USED IN OPCODE DESCRIPTIONS

Field	Description
#text	Means literal defined by "text"
(text)	Means "content of text"
[text]	Means "the location addressed by text"
{ }	Optional field or operation
a ∈ {b, c, d}	a is selected from the set of values b, c, d
[n:m]	Register bit field
.b	Byte mode selection
.d	Double-Word mode selection
.S	Shadow register select
.w	Word mode selection (default)
Acc	One of two accumulators {A, B}
AWB	Accumulator Write-Back Destination Address register ∈ {W13, [W13]+ = 2}
bit4	4-bit bit selection field (used in word-addressed instructions) ∈ {0...15}
C, DC, N, OV, Z	MCU Status bits: Carry, Digit Carry, Negative, Overflow, Sticky Zero
Expr	Absolute address, label or expression (resolved by the linker)
f	File register address ∈ {0x0000...0x1FFF}
lit1	1-bit unsigned literal ∈ {0,1}
lit4	4-bit unsigned literal ∈ {0...15}
lit5	5-bit unsigned literal ∈ {0...31}
lit8	8-bit unsigned literal ∈ {0...255}
lit10	10-bit unsigned literal ∈ {0...255} for Byte mode, {0:1023} for Word mode
lit14	14-bit unsigned literal ∈ {0...16384}
lit16	16-bit unsigned literal ∈ {0...65535}
lit23	23-bit unsigned literal ∈ {0...8388608}; LSb must be '0'
None	Field does not require an entry, can be blank
OA, OB, SA, SB	DSP Status bits: ACCA Overflow, ACCB Overflow, ACCA Saturate, ACCB Saturate
PC	Program Counter
Slit10	10-bit signed literal ∈ {-512...511}
Slit16	16-bit signed literal ∈ {-32768...32767}
Slit6	6-bit signed literal ∈ {-16...16}
Wb	Base W register ∈ {W0...W15}
Wd	Destination W register ∈ { Wd, [Wd], [Wd++], [Wd--], [++Wd], [--Wd] }
Wdo	Destination W register ∈ { Wnd, [Wnd], [Wnd++], [Wnd--], [++Wnd], [--Wnd], [Wnd+Wb] }
Wm,Wn	Dividend, Divisor Working register pair (direct addressing)

© 2018-2019 Microchip Technology Inc.

TABLE 29-1: SYMBOLS USED IN OPCODE DESCRIPTIONS (CONTINUED)

Field	Description
Wm*Wm	Multiplicand and Multiplier Working register pair for Square instructions ∈ {W4 * W4,W5 * W5,W6 * W6,W7 * W7}
Wm*Wn	Multiplicand and Multiplier Working register pair for DSP instructions ∈ {W4 * W5,W4 * W6,W4 * W7,W5 * W6,W5 * W7,W6 * W7}
Wn	One of 16 Working registers ∈ {W0...W15}
Wnd	One of 16 Destination Working registers ∈ {W0...W15}
Wns	One of 16 Source Working registers ∈ {W0...W15}
WREG	W0 (Working register used in file register instructions)
Ws	Source W register ∈ { Ws, [Ws], [Ws++], [Ws--], [++Ws], [--Ws] }
Wso	Source W register ∈ { Wns, [Wns], [Wns++], [Wns--], [++Wns], [--Wns], [Wns+Wb] }
Wx	X Data Space Prefetch Address register for DSP instructions ∈ {[W8] + = 6, [W8] + = 4, [W8] + = 2, [W8], [W8] - = 6, [W8] - = 4, [W8] - = 2, [W9] + = 6, [W9] + = 4, [W9] + = 2, [W9], [W9] - = 6, [W9] - = 4, [W9] - = 2, [W9 + W12], none}
Wxd	X Data Space Prefetch Destination register for DSP instructions ∈ {W4...W7}
Wy	Y Data Space Prefetch Address register for DSP instructions ∈ {[W10] + = 6, [W10] + = 4, [W10] + = 2, [W10], [W10] - = 6, [W10] - = 4, [W10] - = 2, [W11] + = 6, [W11] + = 4, [W11] + = 2, [W11], [W11] - = 6, [W11] - = 4, [W11] - = 2, [W11 + W12], none}
Wyd	Y Data Space Prefetch Destination register for DSP instructions ∈ {W4...W7}

TABLE 29-2: INSTRUCTION SET OVERVIEW

Base Instr #	Assembly Mnemonic	Assembly Syntax	Description	# of Words	# of Cycles(1)	Status Flags Affected
1	ADD	ADD Acc	Add Accumulators	1	1	OA,OB,SA,SB
		ADD f	f = f + WREG	1	1	C,DC,N,OV,Z
		ADD f,WREG	WREG = f + WREG	1	1	C,DC,N,OV,Z
		ADD #lit10,Wn	Wd = lit10 + Wd	1	1	C,DC,N,OV,Z
		ADD Wb,Ws,Wd	Wd = Wb + Ws	1	1	C,DC,N,OV,Z
		ADD Wb,#lit5,Wd	Wd = Wb + lit5	1	1	C,DC,N,OV,Z
		ADD Wso,#Slit4,Acc	16-bit Signed Add to Accumulator	1	1	OA,OB,SA,SB
2	ADDC	ADDC f	f = f + WREG + (C)	1	1	C,DC,N,OV,Z
		ADDC f,WREG	WREG = f + WREG + (C)	1	1	C,DC,N,OV,Z
		ADDC #lit10,Wn	Wd = lit10 + Wd + (C)	1	1	C,DC,N,OV,Z
		ADDC Wb,Ws,Wd	Wd = Wb + Ws + (C)	1	1	C,DC,N,OV,Z
		ADDC Wb,#lit5,Wd	Wd = Wb + lit5 + (C)	1	1	C,DC,N,OV,Z
3	AND	AND f	f = f .AND. WREG	1	1	N,Z
		AND f,WREG	WREG = f .AND. WREG	1	1	N,Z
		AND #lit10,Wn	Wd = lit10 .AND. Wd	1	1	N,Z
		AND Wb,Ws,Wd	Wd = Wb .AND. Ws	1	1	N,Z
		AND Wb,#lit5,Wd	Wd = Wb .AND. lit5	1	1	N,Z
4	ASR	ASR f	f = Arithmetic Right Shift f	1	1	C,N,OV,Z
		ASR f,WREG	WREG = Arithmetic Right Shift f	1	1	C,N,OV,Z
		ASR Ws,Wd	Wd = Arithmetic Right Shift Ws	1	1	C,N,OV,Z
		ASR Wb,Wns,Wnd	Wnd = Arithmetic Right Shift Wb by Wns	1	1	N,Z
		ASR Wb,#lit5,Wnd	Wnd = Arithmetic Right Shift Wb by lit5	1	1	N,Z
5	BCLR	BCLR f,#bit4	Bit Clear f	1	1	None
		BCLR Ws,#bit4	Bit Clear Ws	1	1	None
6	BFEXT	BFEXT bit4,wid5,Ws,Wb	Bit Field Extract from Ws to Wb	2	2	None
		BFEXT bit4,wid5,f,Wb	Bit Field Extract from f to Wb	2	2	None
7	BFINS	BFINS bit4,wid5,Wb,Ws	Bit Field Insert from Wb into Ws	2	2	None
		BFINS bit4,wid5,Wb,f	Bit Field Insert from Wb into f	2	2	None
		BFINS bit4,wid5,lit8,Ws	Bit Field Insert from #lit8 to Ws	2	2	None

Note 1: Read and Read-Modify-Write (e.g., bit operations and logical operations) on non-CPU SFRs incur an additional instruction cycle.
2: The divide instructions must be preceded with a "`REPEAT #5`" instruction, such that they are executed six consecutive times.

© 2018-2019 Microchip Technology Inc.

TABLE 29-2: INSTRUCTION SET OVERVIEW (CONTINUED)

Base Instr #	Assembly Mnemonic	Assembly Syntax		Description	# of Words	# of Cycles(1)	Status Flags Affected
9	BRA	BRA	C,Expr	Branch if Carry	1	1 (4)	None
		BRA	GE,Expr	Branch if Greater Than or Equal	1	1 (4)	None
		BRA	GEU,Expr	Branch if unsigned Greater Than or Equal	1	1 (4)	None
		BRA	GT,Expr	Branch if Greater Than	1	1 (4)	None
		BRA	GTU,Expr	Branch if Unsigned Greater Than	1	1 (4)	None
		BRA	LE,Expr	Branch if Less Than or Equal	1	1 (4)	None
		BRA	LEU,Expr	Branch if Unsigned Less Than or Equal	1	1 (4)	None
		BRA	LT,Expr	Branch if Less Than	1	1 (4)	None
		BRA	LTU,Expr	Branch if Unsigned Less Than	1	1 (4)	None
		BRA	N,Expr	Branch if Negative	1	1 (4)	None
		BRA	NC,Expr	Branch if Not Carry	1	1 (4)	None
		BRA	NN,Expr	Branch if Not Negative	1	1 (4)	None
		BRA	NOV,Expr	Branch if Not Overflow	1	1 (4)	None
		BRA	NZ,Expr	Branch if Not Zero	1	1 (4)	None
		BRA	OA,Expr	Branch if Accumulator A Overflow	1	1 (4)	None
		BRA	OB,Expr	Branch if Accumulator B Overflow	1	1 (4)	None
		BRA	OV,Expr	Branch if Overflow	1	1 (4)	None
		BRA	SA,Expr	Branch if Accumulator A Saturated	1	1 (4)	None
		BRA	SB,Expr	Branch if Accumulator B Saturated	1	1 (4)	None
		BRA	Expr	Branch Unconditionally	1	4	None
		BRA	Z,Expr	Branch if Zero	1	1 (4)	None
		BRA	Wn	Computed Branch	1	4	None
10	BREAK	BREAK		Stop User Code Execution	1	1	None
11	BSET	BSET	f,#bit4	Bit Set f	1	1	None
			Ws,#bit4	Bit Set Ws	1	1	None
12	BSW	BSW.C	Ws,Wb	Write C bit to Ws<Wb>	1	1	None
		BSW.Z	Ws,Wb	Write Z bit to Ws<Wb>	1	1	None
13	BTG	BTG	f,#bit4	Bit Toggle f	1	1	None
		BTG	Ws,#bit4	Bit Toggle Ws	1	1	None
14	BTSC	BTSC	f,#bit4	Bit Test f, Skip if Clear	1	1 (2 or 3)	None
		BTSC	Ws,#bit4	Bit Test Ws, Skip if Clear	1	1 (2 or 3)	None
15	BTSS	BTSS	f,#bit4	Bit Test f, Skip if Set	1	1 (2 or 3)	None
		BTSS	Ws,#bit4	Bit Test Ws, Skip if Set	1	1 (2 or 3)	None
16	BTST	BTST	f,#bit4	Bit Test f	1	1	Z
		BTST.C	Ws,#bit4	Bit Test Ws to C	1	1	C
		BTST.Z	Ws,#bit4	Bit Test Ws to Z	1	1	Z
		BTST.C	Ws,Wb	Bit Test Ws<Wb> to C	1	1	C
		BTST.Z	Ws,Wb	Bit Test Ws<Wb> to Z	1	1	Z
17	BTSTS	BTSTS	f,#bit4	Bit Test then Set f	1	1	Z
		BTSTS.C	Ws,#bit4	Bit Test Ws to C, then Set	1	1	C
		BTSTS.Z	Ws,#bit4	Bit Test Ws to Z, then Set	1	1	Z
18	CALL	CALL	lit23	Call Subroutine	2	4	SFA
		CALL	Wn	Call Indirect Subroutine	1	4	SFA
		CALL.L	Wn	Call Indirect Subroutine (long address)	1	4	SFA
19	CLR	CLR	f	f = 0x0000	1	1	None
		CLR	WREG	WREG = 0x0000	1	1	None
		CLR	Ws	Ws = 0x0000	1	1	None
		CLR	Acc,Wx,Wxd,Wy,Wyd,AWB	Clear Accumulator	1	1	OA,OB,SA,SB

Note 1: Read and Read-Modify-Write (e.g., bit operations and logical operations) on non-CPU SFRs incur an additional instruction cycle.
2: The divide instructions must be preceded with a "`REPEAT #5`" instruction, such that they are executed six consecutive times.

TABLE 29-2: INSTRUCTION SET OVERVIEW (CONTINUED)

Base Instr #	Assembly Mnemonic	Assembly Syntax	Description	# of Words	# of Cycles(1)	Status Flags Affected
20	CLRWDT	CLRWDT	Clear Watchdog Timer	1	1	WDTO,Sleep
21	COM	COM f	f = $\overline{f}$	1	1	N,Z
		COM f,WREG	WREG = $\overline{f}$	1	1	N,Z
		COM Ws,Wd	Wd = $\overline{Ws}$	1	1	N,Z
22	CP	CP f	Compare f with WREG	1	1	C,DC,N,OV,Z
		CP Wb,#lit8	Compare Wb with lit8	1	1	C,DC,N,OV,Z
		CP Wb,Ws	Compare Wb with Ws (Wb – Ws)	1	1	C,DC,N,OV,Z
23	CP0	CP0 f	Compare f with 0x0000	1	1	C,DC,N,OV,Z
		CP0 Ws	Compare Ws with 0x0000	1	1	C,DC,N,OV,Z
24	CPB	CPB f	Compare f with WREG, with Borrow	1	1	C,DC,N,OV,Z
		CPB Wb,#lit8	Compare Wb with lit8, with Borrow	1	1	C,DC,N,OV,Z
		CPB Wb,Ws	Compare Wb with Ws, with Borrow (Wb – Ws – $\overline{C}$)	1	1	C,DC,N,OV,Z
25	CPSEQ	CPSEQ Wb,Wn	Compare Wb with Wn, Skip if =	1	1 (2 or 3)	None
	CPBEQ	CPBEQ Wb,Wn,Expr	Compare Wb with Wn, Branch if =	1	1 (5)	None
26	CPSGT	CPSGT Wb,Wn	Compare Wb with Wn, Skip if >	1	1 (2 or 3)	None
	CPBGT	CPBGT Wb,Wn,Expr	Compare Wb with Wn, Branch if >	1	1 (5)	None
27	CPSLT	CPSLT Wb,Wn	Compare Wb with Wn, Skip if <	1	1 (2 or 3)	None
		CPBLT Wb,Wn,Expr	Compare Wb with Wn, Branch if <	1	1 (5)	None
28	CPSNE	CPSNE Wb,Wn	Compare Wb with Wn, Skip if ≠	1	1 (2 or 3)	None
		CPBNE Wb,Wn,Expr	Compare Wb with Wn, Branch if ≠	1	1 (5)	None
29	CTXTSWP	CTXTSWP #lit3	Switch CPU Register Context to Context Defined by lit3	1	2	None
30	CTXTSWP	CTXTSWP Wn	Switch CPU Register Context to Context Defined by Wn	1	2	None
31	DAW.B	DAW.B Wn	Wn = Decimal Adjust Wn	1	1	C
32	DEC	DEC f	f = f – 1	1	1	C,DC,N,OV,Z
		DEC f,WREG	WREG = f – 1	1	1	C,DC,N,OV,Z
		DEC Ws,Wd	Wd = Ws – 1	1	1	C,DC,N,OV,Z
33	DEC2	DEC2 f	f = f – 2	1	1	C,DC,N,OV,Z
		DEC2 f,WREG	WREG = f – 2	1	1	C,DC,N,OV,Z
		DEC2 Ws,Wd	Wd = Ws – 2	1	1	C,DC,N,OV,Z
34	DISI	DISI #lit14	Disable Interrupts for k Instruction Cycles	1	1	None
35	DIVF	DIVF Wm,Wn	Signed 16/16-bit Fractional Divide	1	18	N,Z,C,OV
36	DIV.S(2)	DIV.S Wm,Wn	Signed 16/16-bit Integer Divide	1	18	N,Z,C,OV
		DIV.SD Wm,Wn	Signed 32/16-bit Integer Divide	1	18	N,Z,C,OV
37	DIV.U(2)	DIV.U Wm,Wn	Unsigned 16/16-bit Integer Divide	1	18	N,Z,C,OV
		DIV.UD Wm,Wn	Unsigned 32/16-bit Integer Divide	1	18	N,Z,C,OV
38	DIVF2(2)	DIVF2 Wm,Wn	Signed 16/16-bit Fractional Divide (W1:W0 preserved)	1	6	N,Z,C,OV
39	DIV2.S(2)	DIV2.S Wm,Wn	Signed 16/16-bit Integer Divide (W1:W0 preserved)	1	6	N,Z,C,OV
		DIV2.SD Wm,Wn	Signed 32/16-bit Integer Divide (W1:W0 preserved)	1	6	N,Z,C,OV
40	DIV2.U(2)	DIV2.U Wm,Wn	Unsigned 16/16-bit Integer Divide (W1:W0 preserved)	1	6	N,Z,C,OV
		DIV2.UD Wm,Wn	Unsigned 32/16-bit Integer Divide (W1:W0 preserved)	1	6	N,Z,C,OV
41	DO	DO #lit15,Expr	Do Code to PC + Expr, lit15 + 1 Times	2	2	None
		DO Wn,Expr	Do code to PC + Expr, (Wn) + 1 Times	2	2	None

Note 1: Read and Read-Modify-Write (e.g., bit operations and logical operations) on non-CPU SFRs incur an additional instruction cycle.
2: The divide instructions must be preceded with a "`REPEAT #5`" instruction, such that they are executed six consecutive times.

© 2018-2019 Microchip Technology Inc.

TABLE 29-2: INSTRUCTION SET OVERVIEW (CONTINUED)

Base Instr #	Assembly Mnemonic	Assembly Syntax		Description	# of Words	# of Cycles(1)	Status Flags Affected
42	ED	ED	Wm*Wm,Acc,Wx,Wy,Wxd	Euclidean Distance (no accumulate)	1	1	OA,OB,OAB, SA,SB,SAB
43	EDAC	EDAC	Wm*Wm,Acc,Wx,Wy,Wxd	Euclidean Distance	1	1	OA,OB,OAB, SA,SB,SAB
44	EXCH	EXCH	Wns,Wnd	Swap Wns with Wnd	1	1	None
46	FBCL	FBCL	Ws,Wnd	Find Bit Change from Left (MSb) Side	1	1	C
47	FF1L	FF1L	Ws,Wnd	Find First One from Left (MSb) Side	1	1	C
48	FF1R	FF1R	Ws,Wnd	Find First One from Right (LSb) Side	1	1	C
49	FLIM	FLIM	Wb, Ws	Force Data (Upper and Lower) Range Limit without Limit Excess Result	1	1	N,Z,OV
		FLIM.V	Wb, Ws, Wd	Force Data (Upper and Lower) Range Limit with Limit Excess Result	1	1	N,Z,OV
50	GOTO	GOTO	Expr	Go to Address	2	4	None
		GOTO	Wn	Go to Indirect	1	4	None
		GOTO.L	Wn	Go to Indirect (long address)	1	4	None
51	INC	INC	f	f = f + 1	1	1	C,DC,N,OV,Z
		INC	f,WREG	WREG = f + 1	1	1	C,DC,N,OV,Z
		INC	Ws,Wd	Wd = Ws + 1	1	1	C,DC,N,OV,Z
52	INC2	INC2	f	f = f + 2	1	1	C,DC,N,OV,Z
		INC2	f,WREG	WREG = f + 2	1	1	C,DC,N,OV,Z
		INC2	Ws,Wd	Wd = Ws + 2	1	1	C,DC,N,OV,Z
53	IOR	IOR	f	f = f .IOR. WREG	1	1	N,Z
		IOR	f,WREG	WREG = f .IOR. WREG	1	1	N,Z
		IOR	#lit10,Wn	Wd = lit10 .IOR. Wd	1	1	N,Z
		IOR	Wb,Ws,Wd	Wd = Wb .IOR. Ws	1	1	N,Z
		IOR	Wb,#lit5,Wd	Wd = Wb .IOR. lit5	1	1	N,Z
54	LAC	LAC	Wso,#Slit4,Acc	Load Accumulator	1	1	OA,OB,OAB, SA,SB,SAB
		LAC.D	Wso, #Slit4, Acc	Load Accumulator Double	1	2	OA,SA,OB,SB
56	LNK	LNK	#lit14	Link Frame Pointer	1	1	SFA
57	LSR	LSR	f	f = Logical Right Shift f	1	1	C,N,OV,Z
		LSR	f,WREG	WREG = Logical Right Shift f	1	1	C,N,OV,Z
		LSR	Ws,Wd	Wd = Logical Right Shift Ws	1	1	C,N,OV,Z
		LSR	Wb,Wns,Wnd	Wnd = Logical Right Shift Wb by Wns	1	1	N,Z
		LSR	Wb,#lit5,Wnd	Wnd = Logical Right Shift Wb by lit5	1	1	N,Z
58	MAC	MAC	Wm*Wn,Acc,Wx,Wxd,Wy,Wyd, AWB	Multiply and Accumulate	1	1	OA,OB,OAB, SA,SB,SAB
		MAC	Wm*Wm,Acc,Wx,Wxd,Wy,Wyd	Square and Accumulate	1	1	OA,OB,OAB, SA,SB,SAB
59	MAX	MAX	Acc	Force Data Maximum Range Limit	1	1	N,OV,Z
		MAX.V	Acc, Wnd	Force Data Maximum Range Limit with Result	1	1	N,OV,Z
60	MIN	MIN	Acc	If Accumulator A Less than B Load Accumulator with B or vice versa	1	1	N,OV,Z
		MIN.V	Acc, Wd	If Accumulator A Less than B Accumulator Force Minimum Data Range Limit with Limit Excess Result	1	1	N,OV,Z
		MINZ	Acc	Accumulator Force Minimum Data Range Limit	1	1	N,OV,Z
		MINZ.V	Acc, Wd	Accumulator Force Minimum Data Range Limit with Limit Excess Result	1	1	N,OV,Z

Note 1: Read and Read-Modify-Write (e.g., bit operations and logical operations) on non-CPU SFRs incur an additional instruction cycle.
2: The divide instructions must be preceded with a "`REPEAT #5`" instruction, such that they are executed six consecutive times.

TABLE 29-2: INSTRUCTION SET OVERVIEW (CONTINUED)

Base Instr #	Assembly Mnemonic	Assembly Syntax	Description	# of Words	# of Cycles(1)	Status Flags Affected
61	MOV	MOV f,Wn	Move f to Wn	1	1	None
		MOV f	Move f to f	1	1	None
		MOV f,WREG	Move f to WREG	1	1	None
		MOV #lit16,Wn	Move 16-bit Literal to Wn	1	1	None
		MOV.b #lit8,Wn	Move 8-bit Literal to Wn	1	1	None
		MOV Wn,f	Move Wn to f	1	1	None
		MOV Wso,Wdo	Move Ws to Wd	1	1	None
		MOV WREG,f	Move WREG to f	1	1	None
		MOV.D Wns,Wd	Move Double from W(ns):W(ns + 1) to Wd	1	2	None
		MOV.D Ws,Wnd	Move Double from Ws to W(nd + 1):W(nd)	1	2	None
62	MOVPAG	MOVPAG #lit10,DSRPAG	Move 10-bit Literal to DSRPAG	1	1	None
		MOVPAG #lit8,TBLPAG	Move 8-bit Literal to TBLPAG	1	1	None
		MOVPAG Ws, DSRPAG	Move Ws[9:0] to DSRPAG	1	1	None
		MOVPAG Ws, TBLPAG	Move Ws[7:0] to TBLPAG	1	1	None
64	MOVSAC	MOVSAC Acc,Wx,Wxd,Wy,Wyd,AWB	Prefetch and Store Accumulator	1	1	None
65	MPY	MPY Wm*Wn,Acc,Wx,Wxd,Wy,Wyd	Multiply Wm by Wn to Accumulator	1	1	OA,OB,OAB, SA,SB,SAB
		MPY Wm*Wm,Acc,Wx,Wxd,Wy,Wyd	Square Wm to Accumulator	1	1	OA,OB,OAB, SA,SB,SAB
66	MPY.N	MPY.N Wm*Wn,Acc,Wx,Wxd,Wy,Wyd	-(Multiply Wm by Wn) to Accumulator	1	1	None
67	MSC	MSC Wm*Wm,Acc,Wx,Wxd,Wy,Wyd, AWB	Multiply and Subtract from Accumulator	1	1	OA,OB,OAB, SA,SB,SAB
68	MUL	MUL.SS Wb,Ws,Wnd	{Wnd + 1, Wnd} = Signed(Wb) * Signed(Ws)	1	1	None
		MUL.SS Wb,Ws,Acc	Accumulator = Signed(Wb) * Signed(Ws)	1	1	None
		MUL.SU Wb,Ws,Wnd	{Wnd + 1, Wnd} = Signed(Wb) * Unsigned(Ws)	1	1	None
		MUL.SU Wb,Ws,Acc	Accumulator = Signed(Wb) * Unsigned(Ws)	1	1	None
		MUL.SU Wb,#lit5,Acc	Accumulator = Signed(Wb) * Unsigned(lit5)	1	1	None
		MUL.US Wb,Ws,Wnd	{Wnd + 1, Wnd} = Unsigned(Wb) * Signed(Ws)	1	1	None
		MUL.US Wb,Ws,Acc	Accumulator = Unsigned(Wb) * Signed(Ws)	1	1	None
		MUL.UU Wb,Ws,Wnd	{Wnd + 1, Wnd} = Unsigned(Wb) * Unsigned(Ws)	1	1	None
		MUL.UU Wb,#lit5,Acc	Accumulator = Unsigned(Wb) * Unsigned(lit5)	1	1	None
		MUL.UU Wb,Ws,Acc	Accumulator = Unsigned(Wb) * Unsigned(Ws)	1	1	None
		MULW.SS Wb,Ws,Wnd	Wnd = Signed(Wb) * Signed(Ws)	1	1	None
		MULW.SU Wb,Ws,Wnd	Wnd = Signed(Wb) * Unsigned(Ws)	1	1	None
		MULW.US Wb,Ws,Wnd	Wnd = Unsigned(Wb) * Signed(Ws)	1	1	None
		MULW.UU Wb,Ws,Wnd	Wnd = Unsigned(Wb) * Unsigned(Ws)	1	1	None
		MUL.SU Wb,#lit5,Wnd	{Wnd + 1, Wnd} = Signed(Wb) * Unsigned(lit5)	1	1	None
		MUL.SU Wb,#lit5,Wnd	Wnd = Signed(Wb) * Unsigned(lit5)	1	1	None
		MUL.UU Wb,#lit5,Wnd	{Wnd + 1, Wnd} = Unsigned(Wb) * Unsigned(lit5)	1	1	None
		MUL.UU Wb,#lit5,Wnd	Wnd = Unsigned(Wb) * Unsigned(lit5)	1	1	None
		MUL f	W3:W2 = f * WREG	1	1	None

Note 1: Read and Read-Modify-Write (e.g., bit operations and logical operations) on non-CPU SFRs incur an additional instruction cycle.
2: The divide instructions must be preceded with a "`REPEAT #5`" instruction, such that they are executed six consecutive times.

© 2018-2019 Microchip Technology Inc.

TABLE 29-2: INSTRUCTION SET OVERVIEW (CONTINUED)

Base Instr #	Assembly Mnemonic	Assembly Syntax	Description	# of Words	# of Cycles(1)	Status Flags Affected
69	NEG	NEG Acc	Negate Accumulator	1	1	OA,OB,OAB, SA,SB,SAB
		NEG f	f = $\overline{f}$ + 1	1	1	C,DC,N,OV,Z
		NEG f,WREG	WREG = $\overline{f}$ + 1	1	1	C,DC,N,OV,Z
		NEG Ws,Wd	Wd = $\overline{Ws}$ + 1	1	1	C,DC,N,OV,Z
70	NOP	NOP	No Operation	1	1	None
		NOPR	No Operation	1	1	None
71	NORM	NORM Acc, Wd	Normalize Accumulator	1	1	N,OV,Z
72	POP	POP f	Pop f from Top-of-Stack (TOS)	1	1	None
		POP Wdo	Pop from Top-of-Stack (TOS) to Wdo	1	1	None
		POP.D Wnd	Pop from Top-of-Stack (TOS) to W(nd):W(nd + 1)	1	2	None
		POP.S	Pop Shadow Registers	1	1	All
73	PUSH	PUSH f	Push f to Top-of-Stack (TOS)	1	1	None
		PUSH Wso	Push Wso to Top-of-Stack (TOS)	1	1	None
		PUSH.D Wns	Push W(ns):W(ns + 1) to Top-of-Stack (TOS)	1	2	None
		PUSH.S	Push Shadow Registers	1	1	None
74	PWRSAV	PWRSAV #lit1	Go into Sleep or Idle mode	1	1	WDTO,Sleep
75	RCALL	RCALL Expr	Relative Call	1	4	SFA
		RCALL Wn	Computed Call	1	4	SFA
76	REPEAT	REPEAT #lit15	Repeat Next Instruction lit15 + 1 Times	1	1	None
		REPEAT Wn	Repeat Next Instruction (Wn) + 1 Times	1	1	None
77	RESET	RESET	Software Device Reset	1	1	None
78	RETFIE	RETFIE	Return from Interrupt	1	6 (5)	SFA
79	RETLW	RETLW #lit10,Wn	Return with Literal in Wn	1	6 (5)	SFA
80	RETURN	RETURN	Return from Subroutine	1	6 (5)	SFA
81	RLC	RLC f	f = Rotate Left through Carry f	1	1	C,N,Z
		RLC f,WREG	WREG = Rotate Left through Carry f	1	1	C,N,Z
		RLC Ws,Wd	Wd = Rotate Left through Carry Ws	1	1	C,N,Z
82	RLNC	RLNC f	f = Rotate Left (No Carry) f	1	1	N,Z
		RLNC f,WREG	WREG = Rotate Left (No Carry) f	1	1	N,Z
		RLNC Ws,Wd	Wd = Rotate Left (No Carry) Ws	1	1	N,Z
83	RRC	RRC f	f = Rotate Right through Carry f	1	1	C,N,Z
		RRC f,WREG	WREG = Rotate Right through Carry f	1	1	C,N,Z
		RRC Ws,Wd	Wd = Rotate Right through Carry Ws	1	1	C,N,Z
84	RRNC	RRNC f	f = Rotate Right (No Carry) f	1	1	N,Z
		RRNC f,WREG	WREG = Rotate Right (No Carry) f	1	1	N,Z
		RRNC Ws,Wd	Wd = Rotate Right (No Carry) Ws	1	1	N,Z
85	SAC	SAC Acc,#Slit4,Wdo	Store Accumulator	1	1	None
		SAC.R Acc,#Slit4,Wdo	Store Rounded Accumulator	1	1	None
86	SE	SE Ws,Wnd	Wnd = Sign-Extended Ws	1	1	C,N,Z
87	SETM	SETM f	f = 0xFFFF	1	1	None
		SETM WREG	WREG = 0xFFFF	1	1	None
		SETM Ws	Ws = 0xFFFF	1	1	None
88	SFTAC	SFTAC Acc,Wn	Arithmetic Shift Accumulator by (Wn)	1	1	OA,OB,OAB, SA,SB,SAB
		SFTAC Acc,#Slit6	Arithmetic Shift Accumulator by Slit6	1	1	OA,OB,OAB, SA,SB,SAB

Note 1: Read and Read-Modify-Write (e.g., bit operations and logical operations) on non-CPU SFRs incur an additional instruction cycle.
2: The divide instructions must be preceded with a "`REPEAT #5`" instruction, such that they are executed six consecutive times.

TABLE 29-2: INSTRUCTION SET OVERVIEW (CONTINUED)

Base Instr #	Assembly Mnemonic	Assembly Syntax		Description	# of Words	# of Cycles(1)	Status Flags Affected
89	SL	SL	f	f = Left Shift f	1	1	C,N,OV,Z
		SL	f,WREG	WREG = Left Shift f	1	1	C,N,OV,Z
		SL	Ws,Wd	Wd = Left Shift Ws	1	1	C,N,OV,Z
		SL	Wb,Wns,Wnd	Wnd = Left Shift Wb by Wns	1	1	N,Z
		SL	Wb,#lit5,Wnd	Wnd = Left Shift Wb by lit5	1	1	N,Z
91	SUB	SUB	Acc	Subtract Accumulators	1	1	OA,OB,OAB, SA,SB,SAB
		SUB	f	f = f – WREG	1	1	C,DC,N,OV,Z
		SUB	f,WREG	WREG = f – WREG	1	1	C,DC,N,OV,Z
		SUB	#lit10,Wn	Wn = Wn – lit10	1	1	C,DC,N,OV,Z
		SUB	Wb,Ws,Wd	Wd = Wb – Ws	1	1	C,DC,N,OV,Z
		SUB	Wb,#lit5,Wd	Wd = Wb – lit5	1	1	C,DC,N,OV,Z
92	SUBB	SUBB	f	f = f – WREG – ($\overline{C}$)	1	1	C,DC,N,OV,Z
		SUBB	f,WREG	WREG = f – WREG – ($\overline{C}$)	1	1	C,DC,N,OV,Z
		SUBB	#lit10,Wn	Wn = Wn – lit10 – ($\overline{C}$)	1	1	C,DC,N,OV,Z
		SUBB	Wb,Ws,Wd	Wd = Wb – Ws – ($\overline{C}$)	1	1	C,DC,N,OV,Z
		SUBB	Wb,#lit5,Wd	Wd = Wb – lit5 – ($\overline{C}$)	1	1	C,DC,N,OV,Z
93	SUBR	SUBR	f	f = WREG – f	1	1	C,DC,N,OV,Z
		SUBR	f,WREG	WREG = WREG – f	1	1	C,DC,N,OV,Z
		SUBR	Wb,Ws,Wd	Wd = Ws – Wb	1	1	C,DC,N,OV,Z
		SUBR	Wb,#lit5,Wd	Wd = lit5 – Wb	1	1	C,DC,N,OV,Z
94	SUBBR	SUBBR	f	f = WREG – f – ($\overline{C}$)	1	1	C,DC,N,OV,Z
		SUBBR	f,WREG	WREG = WREG – f – ($\overline{C}$)	1	1	C,DC,N,OV,Z
		SUBBR	Wb,Ws,Wd	Wd = Ws – Wb – ($\overline{C}$)	1	1	C,DC,N,OV,Z
		SUBBR	Wb,#lit5,Wd	Wd = lit5 – Wb – ($\overline{C}$)	1	1	C,DC,N,OV,Z
95	SWAP	SWAP.b	Wn	Wn = Nibble Swap Wn	1	1	None
		SWAP	Wn	Wn = Byte Swap Wn	1	1	None
96	TBLRDH	TBLRDH	Ws,Wd	Read Prog[23:16] to Wd[7:0]	1	5	None
97	TBLRDL	TBLRDL	Ws,Wd	Read Prog[15:0] to Wd	1	5	None
98	TBLWTH	TBLWTH	Ws,Wd	Write Ws[7:0] to Prog[23:16]	1	2	None
99	TBLWTL	TBLWTL	Ws,Wd	Write Ws to Prog[15:0]	1	2	None
101	ULNK	ULNK		Unlink Frame Pointer	1	1	SFA
104	XOR	XOR	f	f = f .XOR. WREG	1	1	N,Z
		XOR	f,WREG	WREG = f .XOR. WREG	1	1	N,Z
		XOR	#lit10,Wn	Wd = lit10 .XOR. Wd	1	1	N,Z
		XOR	Wb,Ws,Wd	Wd = Wb .XOR. Ws	1	1	N,Z
		XOR	Wb,#lit5,Wd	Wd = Wb .XOR. lit5	1	1	N,Z
105	ZE	ZE	Ws,Wnd	Wnd = Zero-Extend Ws	1	1	C,Z,N

Note 1: Read and Read-Modify-Write (e.g., bit operations and logical operations) on non-CPU SFRs incur an additional instruction cycle.

2: The divide instructions must be preceded with a "`REPEAT #5`" instruction, such that they are executed six consecutive times.

© 2018-2019 Microchip Technology Inc.

30.0 DEVELOPMENT SUPPORT

The PIC® microcontrollers (MCU) and dsPIC® digital signal controllers (DSC) are supported with a full range of software and hardware development tools:

- Integrated Development Environment
  - MPLAB® X IDE Software
- Compilers/Assemblers/Linkers
  - MPLAB XC Compiler
  - MPASM™ Assembler
  - MPLINK™ Object Linker/ MPLIB™ Object Librarian
  - MPLAB Assembler/Linker/Librarian for Various Device Families
- Simulators
  - MPLAB X SIM Software Simulator
- Emulators
  - MPLAB REAL ICE™ In-Circuit Emulator
- In-Circuit Debuggers/Programmers
  - MPLAB ICD 3
  - PICkit™ 3
- Device Programmers
  - MPLAB PM3 Device Programmer
- Low-Cost Demonstration/Development Boards, Evaluation Kits and Starter Kits
- Third-party development tools

30.1 MPLAB X Integrated Development Environment Software

The MPLAB X IDE is a single, unified graphical user interface for Microchip and third-party software, and hardware development tool that runs on Windows®, Linux and Mac OS® X. Based on the NetBeans IDE, MPLAB X IDE is an entirely new IDE with a host of free software components and plug-ins for high-performance application development and debugging. Moving between tools and upgrading from software simulators to hardware debugging and programming tools is simple with the seamless user interface.

With complete project management, visual call graphs, a configurable watch window and a feature-rich editor that includes code completion and context menus, MPLAB X IDE is flexible and friendly enough for new users. With the ability to support multiple tools on multiple projects with simultaneous debugging, MPLAB X IDE is also suitable for the needs of experienced users.

Feature-Rich Editor:

- Color syntax highlighting
- Smart code completion makes suggestions and provides hints as you type
- Automatic code formatting based on user-defined rules
- Live parsing

User-Friendly, Customizable Interface:

- Fully customizable interface: toolbars, toolbar buttons, windows, window placement, etc.
- Call graph window

Project-Based Workspaces:

- Multiple projects
- Multiple tools
- Multiple configurations
- Simultaneous debugging sessions

File History and Bug Tracking:

- Local file history feature
- Built-in support for Bugzilla issue tracker

30.2 MPLAB XC Compilers

The MPLAB XC Compilers are complete ANSI C compilers for all of Microchip's 8, 16 and 32-bit MCU and DSC devices. These compilers provide powerful integration capabilities, superior code optimization and ease of use. MPLAB XC Compilers run on Windows, Linux or MAC OS X.

For easy source level debugging, the compilers provide debug information that is optimized to the MPLAB X IDE.

The free MPLAB XC Compiler editions support all devices and commands, with no time or memory restrictions, and offer sufficient code optimization for most applications.

MPLAB XC Compilers include an assembler, linker and utilities. The assembler generates relocatable object files that can then be archived or linked with other relocatable object files and archives to create an executable file. MPLAB XC Compiler uses the assembler to produce its object file. Notable features of the assembler include:

- Support for the entire device instruction set
- Support for fixed-point and floating-point data
- Command-line interface
- Rich directive set
- Flexible macro language
- MPLAB X IDE compatibility

30.3 MPASM Assembler

The MPASM Assembler is a full-featured, universal macro assembler for PIC10/12/16/18 MCUs.

The MPASM Assembler generates relocatable object files for the MPLINK Object Linker, Intel® standard HEX files, MAP files to detail memory usage and symbol reference, absolute LST files that contain source lines and generated machine code, and COFF files for debugging.

The MPASM Assembler features include:

- Integration into MPLAB X IDE projects
- User-defined macros to streamline assembly code
- Conditional assembly for multipurpose source files
- Directives that allow complete control over the assembly process

30.4 MPLINK Object Linker/ MPLIB Object Librarian

The MPLINK Object Linker combines relocatable objects created by the MPASM Assembler. It can link relocatable objects from precompiled libraries, using directives from a linker script.

The MPLIB Object Librarian manages the creation and modification of library files of precompiled code. When a routine from a library is called from a source file, only the modules that contain that routine will be linked in with the application. This allows large libraries to be used efficiently in many different applications.

The object linker/library features include:

- Efficient linking of single libraries instead of many smaller files
- Enhanced code maintainability by grouping related modules together
- Flexible creation of libraries with easy module listing, replacement, deletion and extraction

30.5 MPLAB Assembler, Linker and Librarian for Various Device Families

MPLAB Assembler produces relocatable machine code from symbolic assembly language for PIC24, PIC32 and dsPIC DSC devices. MPLAB XC Compiler uses the assembler to produce its object file. The assembler generates relocatable object files that can then be archived or linked with other relocatable object files and archives to create an executable file. Notable features of the assembler include:

- Support for the entire device instruction set
- Support for fixed-point and floating-point data
- Command-line interface
- Rich directive set
- Flexible macro language
- MPLAB X IDE compatibility

© 2018-2019 Microchip Technology Inc.

30.6 MPLAB X SIM Software Simulator

The MPLAB X SIM Software Simulator allows code development in a PC-hosted environment by simulating the PIC MCUs and dsPIC DSCs on an instruction level. On any given instruction, the data areas can be examined or modified and stimuli can be applied from a comprehensive stimulus controller. Registers can be logged to files for further run-time analysis. The trace buffer and logic analyzer display extend the power of the simulator to record and track program execution, actions on I/O, most peripherals and internal registers.

The MPLAB X SIM Software Simulator fully supports symbolic debugging using the MPLAB XC Compilers, and the MPASM and MPLAB Assemblers. The software simulator offers the flexibility to develop and debug code outside of the hardware laboratory environment, making it an excellent, economical software development tool.

30.7 MPLAB REAL ICE In-Circuit Emulator System

The MPLAB REAL ICE In-Circuit Emulator System is Microchip's next generation high-speed emulator for Microchip Flash DSC and MCU devices. It debugs and programs all 8, 16 and 32-bit MCU, and DSC devices with the easy-to-use, powerful graphical user interface of the MPLAB X IDE.

The emulator is connected to the design engineer's PC using a high-speed USB 2.0 interface and is connected to the target with either a connector compatible with in-circuit debugger systems (RJ-11) or with the new high-speed, noise tolerant, Low-Voltage Differential Signal (LVDS) interconnection (CAT5).

The emulator is field upgradable through future firmware downloads in MPLAB X IDE. MPLAB REAL ICE offers significant advantages over competitive emulators including full-speed emulation, run-time variable watches, trace analysis, complex breakpoints, logic probes, a ruggedized probe interface and long (up to three meters) interconnection cables.

30.8 MPLAB ICD 3 In-Circuit Debugger System

The MPLAB ICD 3 In-Circuit Debugger System is Microchip's most cost-effective, high-speed hardware debugger/programmer for Microchip Flash DSC and MCU devices. It debugs and programs PIC Flash microcontrollers and dsPIC DSCs with the powerful, yet easy-to-use graphical user interface of the MPLAB IDE.

The MPLAB ICD 3 In-Circuit Debugger probe is connected to the design engineer's PC using a high-speed USB 2.0 interface and is connected to the target with a connector compatible with the MPLAB ICD 2 or MPLAB REAL ICE systems (RJ-11). MPLAB ICD 3 supports all MPLAB ICD 2 headers.

30.9 PICkit 3 In-Circuit Debugger/ Programmer

The MPLAB PICkit 3 allows debugging and programming of PIC and dsPIC Flash microcontrollers at a most affordable price point using the powerful graphical user interface of the MPLAB IDE. The MPLAB PICkit 3 is connected to the design engineer's PC using a full-speed USB interface and can be connected to the target via a Microchip debug (RJ-11) connector (compatible with MPLAB ICD 3 and MPLAB REAL ICE). The connector uses two device I/O pins and the Reset line to implement in-circuit debugging and In-Circuit Serial Programming™ (ICSP™).

30.10 MPLAB PM3 Device Programmer

The MPLAB PM3 Device Programmer is a universal, CE compliant device programmer with programmable voltage verification at V_{DDMIN} and V_{DDMAX} for maximum reliability. It features a large LCD display (128 x 64) for menus and error messages, and a modular, detachable socket assembly to support various package types. The ICSP cable assembly is included as a standard item. In Stand-Alone mode, the MPLAB PM3 Device Programmer can read, verify and program PIC devices without a PC connection. It can also set code protection in this mode. The MPLAB PM3 connects to the host PC via an RS-232 or USB cable. The MPLAB PM3 has high-speed communications and optimized algorithms for quick programming of large memory devices, and incorporates an MMC card for file storage and data applications.

30.11 Demonstration/Development Boards, Evaluation Kits and Starter Kits

A wide variety of demonstration, development and evaluation boards for various PIC MCUs and dsPIC DSCs allows quick application development on fully functional systems. Most boards include prototyping areas for adding custom circuitry and provide application firmware and source code for examination and modification.

The boards support a variety of features, including LEDs, temperature sensors, switches, speakers, RS-232 interfaces, LCD displays, potentiometers and additional EEPROM memory.

The demonstration and development boards can be used in teaching environments, for prototyping custom circuits and for learning about various microcontroller applications.

In addition to the PICDEM™ and dsPICDEM™ demonstration/development board series of circuits, Microchip has a line of evaluation kits and demonstration software for analog filter design, KEELOQ® security ICs, CAN, IrDA®, PowerSmart battery management, SEEVAL® evaluation system, Sigma-Delta ADC, flow rate sensing, plus many more.

Also available are starter kits that contain everything needed to experience the specified device. This usually includes a single application and debug capability, all on one board.

Check the Microchip webpage (www.microchip.com) for the complete list of demonstration, development and evaluation kits.

30.12 Third-Party Development Tools

Microchip also offers a great collection of tools from third-party vendors. These tools are carefully selected to offer good value and unique functionality.

- Device Programmers and Gang Programmers from companies, such as SoftLog and CCS
- Software Tools from companies, such as Gimpel and Trace Systems
- Protocol Analyzers from companies, such as Saleae and Total Phase
- Demonstration Boards from companies, such as MikroElektronika, Digilent® and Olimex
- Embedded Ethernet Solutions from companies, such as EZ Web Lynx, WIZnet and IPLogika®

© 2018-2019 Microchip Technology Inc.

31.0 ELECTRICAL CHARACTERISTICS

This section provides an overview of the dsPIC33CK64MP105 family electrical characteristics. Additional information will be provided in future revisions of this document as it becomes available.

Absolute maximum ratings for the dsPIC33CK64MP105 family are listed below. Exposure to these maximum rating conditions for extended periods may affect device reliability. Functional operation of the device at these, or any other conditions above the parameters indicated in the operation listings of this specification, is not implied.

Absolute Maximum Ratings(1)

Ambient temperature under bias ..... -40°C to +125°C
Storage temperature ..... -65°C to +150°C
Voltage on V_{DD} with respect to V_{SS} ..... -0.3V to +4.0V
Voltage on any pin that is not 5V tolerant with respect to V_{SS}(3) ..... -0.3V to (V_{DD} + 0.3V)
Voltage on any 5V tolerant pin with respect to V_{SS}(3) ..... -0.3V to +5.5V
Maximum current out of V_{SS} pins ..... 300 mA
Maximum current into V_{DD} pins(2) ..... 300 mA
Maximum current sunk/sourced by any regular I/O pin ..... 15 mA
Maximum current sunk/sourced by an I/O pin with increased current drive strength (RB1, RC8, RC9 and RD8) ..... 25 mA
Maximum current sunk by a group of I/Os between two V_{SS} pins(4) ..... 75 mA
Maximum current sourced by a group of I/Os between two V_{DD} pins(4) ..... 75 mA
Maximum current sunk by all I/Os(2,5) ..... 200 mA
Maximum current sourced by all I/Os(2,5) ..... 200 mA

Note 1: Stresses above those listed under “Absolute Maximum Ratings” may cause permanent damage to the device. This is a stress rating only and functional operation of the device at those, or any other conditions above those indicated in the operation listings of this specification, is not implied. Exposure to maximum rating conditions for extended periods may affect device reliability.

2: Maximum allowable current is a function of device maximum power dissipation (see Table 31-2).

3: See the **“Pin Diagrams”** section for the 5V tolerant pins.

4: Not applicable to AV_{DD} and AV_{SS} pins.

5: For 28-pin packages, the maximum current sunk/sourced by all I/Os is limited by 150 mA.

31.1 DC Characteristics

TABLE 31-1: dsPIC33CK64MP105 FAMILY OPERATING CONDITIONS

V_{DD} Range	Temperature Range	Maximum CPU Clock Frequency
3.0V to 3.6V	-40°C to +125°C	100 MHz

TABLE 31-2: THERMAL OPERATING CONDITIONS

Rating	Symbol	Min.	Max.	Unit
Industrial Temperature Devices				
Operating Junction Temperature Range	T_J	-40	+125	°C
Operating Ambient Temperature Range	T_A	-40	+85	°C
Extended Temperature Devices				
Operating Junction Temperature Range	T_J	-40	+140	°C
Operating Ambient Temperature Range	T_A	-40	+125	°C
Power Dissipation: Internal Chip Power Dissipation: $P_{INT} = V_{DD} \times (I_{DD} - \Sigma I_{OH})$ I/O Pin Power Dissipation: $I/O = \Sigma (\{V_{DD} - V_{OH}\} \times I_{OH}) + \Sigma (V_{OL} \times I_{OL})$	P_D	$P_{INT} + P_{I/O}$		W
Maximum Allowed Power Dissipation	P_{DMAX}	$(T_J - T_A)/\theta_{JA}$		W

TABLE 31-3: PACKAGE THERMAL RESISTANCE(1)

Package	Symbol	Typ.	Unit
48-Pin TQFP 7x7 mm	θ_{JA}	62.76	°C/W
48-Pin UQFN 6x6 mm	θ_{JA}	27.6	°C/W
36-Pin UQFN 5x5 mm	θ_{JA}	29.2	°C/W
28-Pin UQFN 6x6 mm	θ_{JA}	22.41	°C/W
28-Pin UQFN 4x4 mm	θ_{JA}	26.0	°C/W
28-Pin SSOP 5.30 mm	θ_{JA}	52.84	°C/W

Note 1: Junction to ambient thermal resistance, Theta-JA (θ_{JA}) numbers are achieved by package simulations.

TABLE 31-4: OPERATING VOLTAGE SPECIFICATIONS

Operating Conditions (unless otherwise stated):
-40°C ≤ T_A ≤ +85°C for Industrial
-40°C ≤ T_A ≤ +125°C for Extended

Param No.	Symbol	Characteristic	Min.	Max.	Units	Conditions
DC10	V_{DD}	**Supply Voltage**	3.0	3.6	V	
DC16	V_{POR}	**V_{DD} Start Voltage** to Ensure Internal Power-on Reset Signal	—	V_{SS}	V	
DC17	S_{VDD}	**V_{DD} Rise Rate** to Ensure Internal Power-on Reset Signal	0.03	—	V/ms	0V-3V in 100 ms
BO10	V_{BOR}(1)	**BOR Event** on V_{DD} Transition High-to-Low	2.65	2.95	V	

Note 1: Device is functional at $V_{BORMIN} < V_{DD} < V_{DDMIN}$. Analog modules (ADC and comparators) may have degraded performance. The V_{BOR} parameter is for design guidance only and is not tested in manufacturing.

© 2018-2019 Microchip Technology Inc.

TABLE 31-5: OPERATING CURRENT (IDD)(2)

Parameter No.	Typ.(1)	Max.	Units	Conditions		
DC20	5.5	6.7	mA	-40°C	3.3V	10 MIPS (N = 1, N2 = 5, N3 = 2, M = 50, FVCO = 400 MHz, FPLLO = 40 MHz)
	5.6	6.9	mA	+25°C		
	6.3	9.5	mA	+85°C		
	8.5	18.0	mA	+125°C		
DC21	7.5	11.0	mA	-40°C	3.3V	20 MIPS (N = 1, N2 = 5, N3 = 1, M = 60, FVCO = 480 MHz, FPLLO = 280 MHz)
	7.6	9.1	mA	+25°C		
	8.3	11.7	mA	+85°C		
	10.5	20.2	mA	+125°C		
DC22	10.7	15.8	mA	-40°C	3.3V	40 MIPS (N = 1, N2 = 3, N3 = 1, M = 60, FVCO = 480 MHz, FPLLO = 160 MHz)
	10.8	12.7	mA	+25°C		
	11.6	15.3	mA	+85°C		
	13.9	23.8	mA	+125°C		
DC23	16.6	25.8	mA	-40°C	3.3V	70 MIPS (N = 1, N2 = 2, N3 = 1, M = 70, FVCO = 560 MHz, FPLLO = 280 MHz)
	16.9	19.4	mA	+25°C		
	17.7	22.0	mA	+85°C		
	20.0	30.4	mA	+125°C		
DC24	21.1	32.7	mA	-40°C	3.3V	90 MIPS (N = 1, N2 = 2, N3 = 1, M = 90, FVCO = 720 MHz, FPLLO = 360 MHz)
	21.4	24.5	mA	+25°C		
	22.1	27.0	mA	+85°C		
	23.9	34.5	mA	+125°C		
DC25	20.7	33.9	mA	-40°C	3.3V	100 MIPS (N = 1, N2 = 1, N3 = 1, M = 50, FVCO = 400 MHz, FPLLO = 400 MHz)
	21.0	24.1	mA	+25°C		
	21.4	26.2	mA	+85°C		
	23.7	35.0	mA	+125°C		

Note 1: Data in the “Typ.” column are for design guidance only and are not tested.

2: Base run current (IDD) is measured as follows:

- Oscillator is switched to EC+PLL mode in software
- OSC1 pin is driven with external 8 MHz square wave with levels from 0.3V to VDD – 0.3V
- OSC2 pin is configured as an I/O in the Configuration Words (OSCIOFCN (FOSC[2]) = `0`)
- FSCM is disabled (FCKSM[1:0] (FOSC[7:6]) = `01`)
- Watchdog Timer is disabled (FWDTEN (FWDT[15]) = `0`)
- All I/O pins (except OSC1) are configured as outputs and driving low
- No peripheral modules are operating or being clocked (defined PMDx bits are all ‘`1`’s)
- JTAG is disabled (JTAGEN (FICD[5]) = `0`)
- `NOP` instructions are executed

TABLE 31-6: IDLE CURRENT (I_{IDLE})(2)

Parameter No.	Typ.(1)	Max.	Units	Conditions		
DC30	4.5	6.5	mA	-40°C	3.3V	10 MIPS (N = 1, N2 = 5, N3 = 2, M = 50, F_{VCO} = 400 MHz, F_{PLLO} = 40 MHz)
	4.5	5.8	mA	+25°C		
	5.3	8.7	mA	+85°C		
	7.5	17.6	mA	+125°C		
DC31	5.1	7.8	mA	-40°C	3.3V	20 MIPS (N = 1, N2 = 5, N3 = 1, M = 50, F_{VCO} = 400 MHz, F_{PLLO} = 80 MHz)
	5.2	6.5	mA	+25°C		
	5.9	9.7	mA	+85°C		
	8.1	18.3	mA	+125°C		
DC32	6.7	9.2	mA	-40°C	3.3V	40 MIPS (N = 1, N2 = 3, N3 = 1, M = 60, F_{VCO} = 480 MHz, F_{PLLO} = 160 MHz)
	6.8	8.1	mA	+25°C		
	7.4	12.5	mA	+85°C		
	9.7	19.8	mA	+125°C		
DC33	8.9	12.5	mA	-40°C	3.3V	70 MIPS (N = 1, N2 = 2, N3 = 1, M = 70, F_{VCO} = 560 MHz, F_{PLLO} = 280 MHz)
	9.0	10.5	mA	+25°C		
	9.6	16.0	mA	+85°C		
	11.8	23.3	mA	+125°C		
DC34	10.6	16.6	mA	-40°C	3.3V	90 MIPS (N = 1, N2 = 2, N3 = 1, M = 90, F_{VCO} = 720 MHz, F_{PLLO} = 360 MHz)
	10.8	12.5	mA	+25°C		
	11.4	18.4	mA	+85°C		
	13.7	26.1	mA	+125°C		
DC35	10.2	15.3	mA	-40°C	3.3V	100 MIPS (N = 1, N2 = 1, N3 = 1, M = 50, F_{VCO} = 400 MHz, F_{PLLO} = 400 MHz)
	10.3	12.0	mA	+25°C		
	10.9	17.5	mA	+85°C		
	13.2	25.2	mA	+125°C		

Note 1: Data in the “Typ.” column are for design guidance only and are not tested.

2: Base Idle current (I_{IDLE}) is measured as follows:

- Oscillator is switched to EC+PLL mode in software
- OSC1 pin is driven with external 8 MHz square wave with levels from 0.3V to V_{DD} – 0.3V
- OSC2 is configured as an I/O in the Configuration Words (OSCIOFCN (FOSC[2]) = `0`)
- FSCM is disabled (FCKSM[1:0] (FOSC[7:6]) = `01`)
- Watchdog Timer is disabled (FWDTEN (FWDT[15]) = `0`)
- All I/O pins (except OSC1) are configured as outputs and driving low
- No peripheral modules are operating or being clocked (defined PMDx bits are all ‘`1`’s)
- JTAG is disabled (JTAGEN (FICD[5]) = `0`)
- `NOP` instructions are executed

© 2018-2019 Microchip Technology Inc.

TABLE 31-7: POWER-DOWN CURRENT (IPD)(2)

Parameter No.	Typ.(1)	Max.	Units	Conditions		
DC40(3)	0.3	0.7	mA	-40°C	3.3V	VREGS bit (RCON[8]) = 0
	0.5	1.3	mA	+25°C		
	1.5	4.7	mA	+85°C		
DC41	0.9	—	mA	-40°C	3.3V	VREGS bit (RCON[8]) = 1
	1.1	—	mA	+25°C		
	2.3	—	mA	+85°C		
	4.7	13.9	mA	+125°C		

Note 1: Data in the "Typ." column are for design guidance only and are not tested.

2: Base Sleep current (IPD) is measured with:

- OSC1 pin is driven with external 8 MHz square wave with levels from 0.3V to VDD – 0.3V
- OSC2 is configured as an I/O in the Configuration Words (OSCIOFCN (FOSC[2]) = 0)
- Low-Power mode for the regulators is enabled (LPWREN (VREGCON[15]) = 1)
- FSCM is disabled (FCKSM[1:0] (FOSC[7:6]) = 01)
- Watchdog Timer is disabled (FWDTEN (FWDT[15]) = 0)
- All I/O pins (except OSC1) are configured as outputs and driving low
- No peripheral modules are operating or being clocked (defined PMDx bits are all '1's)
- JTAG is disabled (JTAGEN (FICD[5]) = 0)

3: The Regulator Standby mode, when the VREGS bit = 0, is operational only in industrial temperature range: -40°C ≤ TA ≤ +85°C.

TABLE 31-8: DOZE CURRENT (IDOZE)

Parameter No.	Typ.(1)	Doze Ratio	Units	Conditions		
DC70	13.4	1:2	mA	-40°C	3.3V	70 MIPS (N = 1, N2 = 2, N3 = 1, M = 70, FVCO = 560 MHz, FPLLO = 280 MHz)
	9.1	1:128	mA			
	13.6	1:2	mA	+25°C		
	9.2	1:128	mA			
	14.1	1:2	mA	+85°C		
	9.9	1:128	mA			
	16.4	1:2	mA	+125°C		
	12.1	1:128	mA			
DC71	16.6	1:2	mA	-40°C	3.3V	100 MIPS (N = 1, N2 = 1, N3 = 1, M = 50, FVCO = 400 MHz, FPLLO = 400 MHz)
	10.5	1:128	mA			
	16.9	1:2	mA	+25°C		
	10.6	1:128	mA			
	17.2	1:2	mA	+85°C		
	11.3	1:128	mA			
	19.5	1:2	mA	+125°C		
	13.5	1:128	mA			

Note 1: Data in the "Typ." column are for design guidance only and are not tested.

TABLE 31-9: WATCHDOG TIMER DELTA CURRENT (ΔI_{WDT})(1)

Parameter No.	Typ.	Units	Conditions	
DC61	1	μA	-40°C	3.3V
	2	μA	+25°C	
	4	μA	+85°C	
	11	μA	+125°C	

Note 1: The ΔI_{WDT} current is the additional current consumed when the module is enabled. This current should be added to the base I_{PD} current. All parameters are for design guidance only and are not tested.

TABLE 31-10: PWM DELTA CURRENT(1)

Parameter No.	Typ.	Max.	Units	Conditions		
DC100	5.96	6.6	mA	-40°C	3.3V	PWM Output Frequency = 500 kHz, PWM Input (AF_{PLLO} = 500 MHz) (AVCO = 1000 MHz, PLLFBD = 125, APLLDIV1 = 2)
	5.99	6.7	mA	+25°C		
	5.92	6.9	mA	+85°C		
	5.47	7	mA	+125°C		
DC101	4.89	5.4	mA	-40°C	3.3V	PWM Output Frequency = 500 kHz, PWM Input (AF_{PLLO} = 400 MHz), (AVCO = 400 MHz, PLLFBD = 50, APLLDIV1 = 1)
	4.91	5.5	mA	+25°C		
	4.85	5.7	mA	+85°C		
	4.42	5.7	mA	+125°C		
DC102	2.77	3.7	mA	-40°C	3.3V	PWM Output Frequency = 500 kHz, PWM Input (AF_{PLLO} = 200 MHz), (AVCO = 400 MHz, PLLFBD = 50, APLLDIV1 = 2)
	2.75	3.7	mA	+25°C		
	2.7	3.7	mA	+85°C		
	2.26	3.7	mA	+125°C		
DC103	1.67	2	mA	-40°C	3.3V	PWM Output Frequency = 500 kHz, PWM Input (AF_{PLLO} = 100 MHz), (AVCO = 400 MHz, PLLFBD = 50, APLLDIV1 = 4)
	1.66	2.2	mA	+25°C		
	1.63	2.3	mA	+85°C		
	1.17	2.3	mA	+125°C		

Note 1: APLL current is not included. The APLL current will be the same if more than one PWM is running. Listed delta currents are for only one PWM instance when HREN = 0 (PGxCONL[7]). All parameters are characterized but not tested during manufacturing.

© 2018-2019 Microchip Technology Inc.

TABLE 31-11: APLL DELTA CURRENT

Parameter No.	Typ.	Max.	Units	Conditions[1]		
DC110	5.93	6.6	mA	-40°C	3.3V	AFPLLO = 500 MHz (AVCO = 1000 MHz, PLLFBD = 125, APLLDIV1 = 2)
	5.95	7	mA	+25°C		
	6.15	7.6	mA	+85°C		
	7.15	9	mA	+125°C		
DC111	2.72	3.3	mA	-40°C	3.3V	AFPLLO = 400 MHz (AVCO = 400 MHz, PLLFBD = 50, APLLDIV1 = 1)
	2.74	3.7	mA	+25°C		
	2.92	4.3	mA	+85°C		
	3.87	5.6	mA	+125°C		
DC112	1.39	2.7	mA	-40°C	3.3V	AFPLLO = 200 MHz (AVCO = 400 MHz, PLLFBD = 50, APLLDIV1 = 2)
	1.49	2.7	mA	+25°C		
	1.65	3	mA	+85°C		
	2.6	4.4	mA	+125°C		
DC113	0.79	1.1	mA	-40°C	3.3V	AFPLLO = 100 MHz (AVCO = 400 MHz, PLLFBD = 50, APLLDIV1 = 4)
	0.84	1.4	mA	+25°C		
	0.96	2.3	mA	+85°C		
	1.93	3.6	mA	+125°C		

Note 1: The APLL current will be the same if more than one PWM or DAC is run to the APLL clock. All parameters are characterized but not tested during manufacturing.

TABLE 31-12: ADC DELTA CURRENT[1]

Parameter No.	Typ.	Max.	Units	Conditions		
DC120	3.61	4	mA	-40°C	3.3V	TAD = 14.3 ns (3.5 Msps conversion rate)
	3.68	4.1	mA	+25°C		
	3.69	4.2	mA	+85°C		
	3.89	4.6	mA	+125°C		

Note 1: Shared core continuous conversion. TAD = 14.3 nS (3.5 Msps conversion rate). Listed delta currents are for only one ADC core. All parameters are characterized but not tested during manufacturing.

TABLE 31-13: COMPARATOR + DAC DELTA CURRENT

Parameter No.	Typ.	Max.	Units	Conditions		
DC130	1.2	1.35	mA	-40°C	3.3V	AFPLLO @ 500 MHz(1)
	1.23	1.65	mA	+25°C		
	1.23	1.65	mA	+85°C		
	1.24	1.65	mA	+125°C		

Note 1: APLL current is not included. Listed delta currents are for only one comparator + DAC instance. All parameters are characterized but not tested during manufacturing.

TABLE 31-14: OP AMP DELTA CURRENT(1)

Parameter No.	Typ.	Max.	Units	Conditions	
DC140	0.25	1	mA	-40°C	3.3V
	0.27	1.1	mA	+25°C	
	0.32	1.4	mA	+85°C	
	0.46	1.7	mA	+125°C	

Note 1: Listed delta currents are for only one op amp instance. All parameters are characterized but not tested during manufacturing.

© 2018-2019 Microchip Technology Inc.

TABLE 31-15: I/O PIN INPUT SPECIFICATIONS

Operating Conditions (unless otherwise stated): 3.0V ≤ VDD ≤ 3.6V, -40°C ≤ TA ≤ +85°C for Industrial, -40°C ≤ TA ≤ +125°C for Extended						
Param No.	**Symbol**	**Characteristic**	**Min.**	**Max.**	**Units**	**Conditions**
DI10	VIL	**Input Low-Level Voltage**				
		Any I/O Pin and $\overline{\text{MCLR}}$	VSS	0.2 VDD	V	
		I/O Pins with SDAx, SCLx	VSS	0.3 VDD	V	SMBus disabled
		I/O Pins with SDAx, SCLx	VSS	0.8	V	SMBus enabled
		I/O Pins with SDAx, SCLx	VSS	0.8	V	SMBus 3.0 enabled
DI20	VIH	**Input High-Level Voltage**(1)				
		I/O Pins Not 5V Tolerant	0.8 VDD	VDD	V	
		I/O Pins 5V Tolerant and $\overline{\text{MCLR}}$	0.8 VDD	5.5	V	
		I/O Pins 5V Tolerant with SDAx, SCLx	0.8 VDD	5.5	V	SMBus disabled
		I/O Pins 5V Tolerant with SDAx, SCLx	2.1	5.5	V	SMBus enabled
		I/O Pins 5V Tolerant with SDAx, SCLx	1.35	VDD	V	SMBus 3.0 enabled
		I/O Pins Not 5V Tolerant with SDAx, SCLx	0.8 VDD	VDD	V	SMBus disabled
		I/O Pins Not 5V Tolerant with SDAx, SCLx	2.1	VDD	V	SMBus enabled
		I/O Pins Not 5V Tolerant with SDAx, SCLx	1.35	VDD	V	SMBus 3.0 enabled
DI30	ICNPU	**Input Current with Pull-up Resistor Enabled**(2)	175	545	μA	VDD = 3.3V, VPIN = VSS
DI31	ICNPD	**Input Current with Pull-Down Resistor Enabled**(2)	65	360	μA	VDD = 3.3V, VPIN = VDD
DI50	IIL	**Input Leakage Current**	-1	—	μA	VPIN = VSS
		I/O Pins and $\overline{\text{MCLR}}$ Pin	—	1	μA	VPIN = VDD

Note 1: See the **"Pin Diagrams"** section for the 5V tolerant I/O pins.

2: Characterized but not tested.

TABLE 31-16: I/O PIN INPUT INJECTION CURRENT SPECIFICATIONS

Operating Conditions (unless otherwise stated):
3.0V ≤ VDD ≤ 3.6V,
-40°C ≤ TA ≤ +85°C for Industrial
-40°C ≤ TA ≤ +125°C for Extended

Param No.	Symbol	Characteristic	Min.	Max.	Units	Conditions
DI60a	I_{ICL}	**Input Low Injection Current**	0	-5(1,4)	mA	This parameter applies to all pins
DI60b	I_{ICH}	**Input High Injection Current**	0	+5(2,3,4)	mA	This parameter applies to all pins, except all 5V tolerant pins and SOSCI
DI60c	$\sum I_{ICT}$	**Total Input Injection Current (sum of all I/O and control pins)**	-20(5)	+20(5)	mA	Absolute instantaneous sum of all ± input injection currents from all I/O pins $\Sigma (\lvert I_{ICL} \rvert + \lvert I_{ICH} \rvert) \leq \sum I_{ICT}$

Note 1: V_{IL} Source < (V_{SS} – 0.3).

2: V_{IH} Source > (V_{DD} + 0.3) for non-5V tolerant pins only.

3: 5V tolerant pins do not have an internal high-side diode to V_{DD}, and therefore, cannot tolerate any "positive" input injection current.

4: Injection currents can affect the ADC results.

5: Any number and/or combination of I/O pins, not excluded under I_{ICL} or I_{ICH} conditions, are permitted in the sum.

TABLE 31-17: I/O PIN OUTPUT SPECIFICATIONS

Operating Conditions (unless otherwise stated):
3.0V ≤ VDD ≤ 3.6V,
-40°C ≤ TA ≤ +85°C for Industrial
-40°C ≤ TA ≤ +125°C for Extended

Param.	Symbol	Characteristic	Typ.(1)	Units	Conditions
DO10	V_{OL}	**Sink Driver Voltage**	0.2	V	I_{SINK} = 3.0 mA, V_{DD} = 3.3V
			0.4	V	I_{SINK} = 6.0 mA, V_{DD} = 3.3V
			0.6	V	I_{SINK} = 9.0 mA, V_{DD} = 3.3V
		Sink Driver Voltage for RB1, RC8, RC9 and RD8 pins	0.25	V	I_{SINK} = 6.0 mA, V_{DD} = 3.3V
			0.5	V	I_{SINK} = 12.0 mA, V_{DD} = 3.3V
			0.75	V	I_{SINK} = 18.0 mA, V_{DD} = 3.3V
DO20	V_{OH}	**Source Driver Voltage**	3.1	V	I_{SOURCE} = 3.0 mA, V_{DD} = 3.3V
			2.9	V	I_{SOURCE} = 6.0 mA, V_{DD} = 3.3V
			2.7	V	I_{SOURCE} = 9.0 mA, V_{DD} = 3.3V
		Source Driver Voltage for RB1, RC8, RC9 and RD8 pins	3.1	V	I_{SOURCE} = 6.0 mA, V_{DD} = 3.3V
			2.8	V	I_{SOURCE} = 12.0 mA, V_{DD} = 3.3V
			2.6	V	I_{SOURCE} = 18.0 mA, V_{DD} = 3.3V

Note 1: Data in the "Typ." column are at 3.3V, +25°C unless otherwise stated. Parameters are for design guidance only and are not tested.

© 2018-2019 Microchip Technology Inc.

TABLE 31-18: PROGRAM FLASH MEMORY SPECIFICATIONS

Operating Conditions (unless otherwise stated): 3.0V ≤ VDD ≤ 3.6V, -40°C ≤ TA ≤ +85°C for Industrial -40°C ≤ TA ≤ +125°C for Extended						
Param No.	**Symbol**	**Characteristic**	**Min.**	**Max.**	**Units**	**Conditions**
		Program Flash Memory				
D130	EP	Cell Endurance	10,000	—	E/W	
D134	TRETD	Characteristic Retention	20	—	Year	
D137a	TPE	Self-Timed Page Erase Time	—	20	ms	
D137b	TCE	Self-Timed Chip Erase Time	—	20	ms	
D138a	TWW	Self-Timed Double-Word Write Cycle Time	—	20	μs	6 bytes, data is not all ‘1’s
D138b	TRW	Self-Timed Row Write Cycle Time	—	1.28	ms	384 bytes, data is not all ‘1’s

31.2 AC Characteristics and Timing Parameters

FIGURE 31-1: LOAD CONDITIONS FOR I/O SPECIFICATIONS

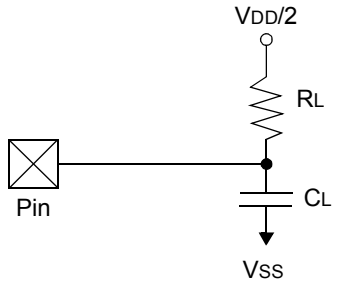

R_L = 464Ω
C_L = 50 pF

© 2018-2019 Microchip Technology Inc.

FIGURE 31-2: I/O TIMING CHARACTERISTICS

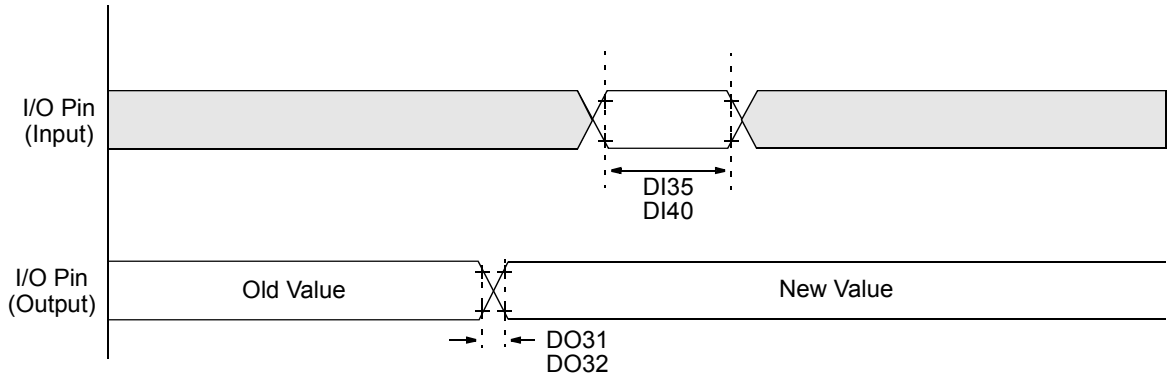

Note: Refer to Figure 31-1 for load conditions.

TABLE 31-19: I/O TIMING REQUIREMENTS

Operating Conditions (unless otherwise stated):
3.0V ≤ VDD ≤ 3.6V,
-40°C ≤ TA ≤ +85°C for Industrial
-40°C ≤ TA ≤ +125°C for Extended

Param No.	Symbol	Characteristic	Min.	Max.	Units
DO31	TIOR	Port Output Rise Time(1)	—	10	ns
DO32	TIOF	Port Output Fall Time(1)	—	10	ns
DI35	TINP	INTx Input Pins High or Low Time	20	—	ns
DI40	TRBP	I/O and CNx Inputs High or Low Time	2	—	TCY

Note 1: This parameter is characterized but not tested in manufacturing.

FIGURE 31-3: EXTERNAL CLOCK TIMING

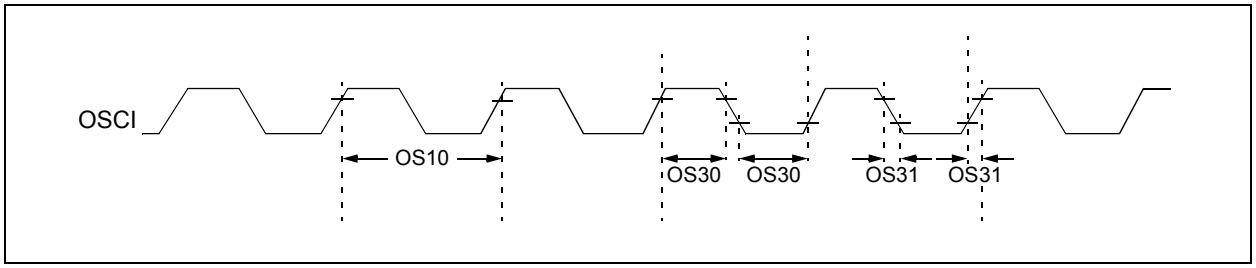

TABLE 31-20: EXTERNAL CLOCK TIMING REQUIREMENTS

Operating Conditions (unless otherwise stated):
3.0V ≤ VDD ≤ 3.6V,
-40°C ≤ TA ≤ +85°C for Industrial
-40°C ≤ TA ≤ +125°C for Extended

Param No.	Sym	Characteristic	Min.	Max.	Units	Conditions
OS10	FIN	External CLKI Frequency	DC	64	MHz	EC
		Oscillator Crystal Frequency	3.5	10	MHz	XT
			10	32	MHz	HS
OS30	TosL, TosH	External Clock in (OSCI) High or Low Time	0.45 x OS10	0.55 x OS10	ns	EC
OS31	TosR, TosF	External Clock in (OSCI) Rise or Fall Time(1)	—	10	ns	EC

Note 1: This parameter is characterized but not tested in manufacturing.

© 2018-2019 Microchip Technology Inc.

TABLE 31-21: PLL CLOCK TIMING SPECIFICATIONS

Operating Conditions (unless otherwise stated): 3.0V ≤ VDD ≤ 3.6V, -40°C ≤ TA ≤ +85°C for Industrial -40°C ≤ TA ≤ +125°C for Extended					
Param No.	**Symbol**	**Characteristic**	**Min.**	**Max.**	**Units**
OS50	FPLLI	PLL Input Frequency Range	8	64	MHz
OS51	FPFD	Phase-Frequency Detector Input Frequency (after first divider)	8	FVCO/16	MHz
OS52	FVCO	VCO Output Frequency	400	1600	MHz
OS53	TLOCK	Lock Time for PLL(1)	—	250	µS

Note 1: This parameter is characterized but not tested in manufacturing.

TABLE 31-22: AUXILIARY PLL CLOCK TIMING SPECIFICATIONS

Operating Conditions (unless otherwise stated): 3.0V ≤ VDD ≤ 3.6V, -40°C ≤ TA ≤ +85°C for Industrial -40°C ≤ TA ≤ +125°C for Extended					
Param No.	**Symbol**	**Characteristic**	**Min.**	**Max.**	**Units**
OS60	FPLLI	APLL Input Frequency Range	8	64	MHz
OS61	FPFD	Phase-Frequency Detector Input Frequency (after first divider)	8	FVCO/16	MHz
OS62	FVCO	VCO Output Frequency	400	1600	MHz
OS63	TLOCK	Lock Time for APLL(1)	—	250	µS

Note 1: This parameter is characterized but not tested in manufacturing.

TABLE 31-23: FRC OSCILLATOR SPECIFICATIONS

Operating Conditions (unless otherwise stated):
3.0V ≤ VDD ≤ 3.6V,
-40°C ≤ TA ≤ +85°C for Industrial
-40°C ≤ TA ≤ +125°C for Extended

Param No.	Symbol	Characteristic	Min	Typ(2)	Max	Units	Conditions
F20	AFRC	FRC Accuracy @ 8 MHz(1)	-3.0	—	3.0	%	-40°C ≤ TA ≤ 0°C
			-1.5	—	1.5	%	0°C ≤ TA ≤ 85°C
			-2.0	—	2.0	%	+85°C ≤ TA ≤ +125°C
F21	TFRC	FRC Oscillator Start-up Time(3)	—	—	15	µS	
F22	STUNE	OSCTUN Step-Size	—	0.05	—	%/bit	

Note 1: To achieve this accuracy, physical stress applied to the microcontroller package (ex., by flexing the PCB) must be kept to a minimum.

2: Data in the “Typ” column are 3.3V, +25°C unless otherwise stated. Parameters are for design guidance only and are not tested.

3: This parameter is characterized but not tested in manufacturing.

TABLE 31-24: LPRC OSCILLATOR SPECIFICATIONS

Operating Conditions (unless otherwise stated):
3.0V ≤ VDD ≤ 3.6V,
-40°C ≤ TA ≤ +85°C for Industrial
-40°C ≤ TA ≤ +125°C for Extended

Param No.	Symbol	Characteristic	Min	Max	Units
F30	ALPRC	LPRC Accuracy @ 32 kHz	-25	25	%
F31	TLPRC	LPRC Oscillator Start-up Time(1)	—	50	µS

Note 1: This parameter is characterized but not tested in manufacturing.

TABLE 31-25: BFRC OSCILLATOR SPECIFICATIONS

Operating Conditions (unless otherwise stated):
3.0V ≤ VDD ≤ 3.6V,
-40°C ≤ TA ≤ +85°C for Industrial
-40°C ≤ TA ≤ +125°C for Extended

Param No.	Symbol	Characteristic	Min	Max	Units
F40	ABFRC	BFRC Accuracy @ 8 MHz	-17	17	%

© 2018-2019 Microchip Technology Inc.

FIGURE 31-4: BOR AND MASTER CLEAR RESET TIMING CHARACTERISTICS

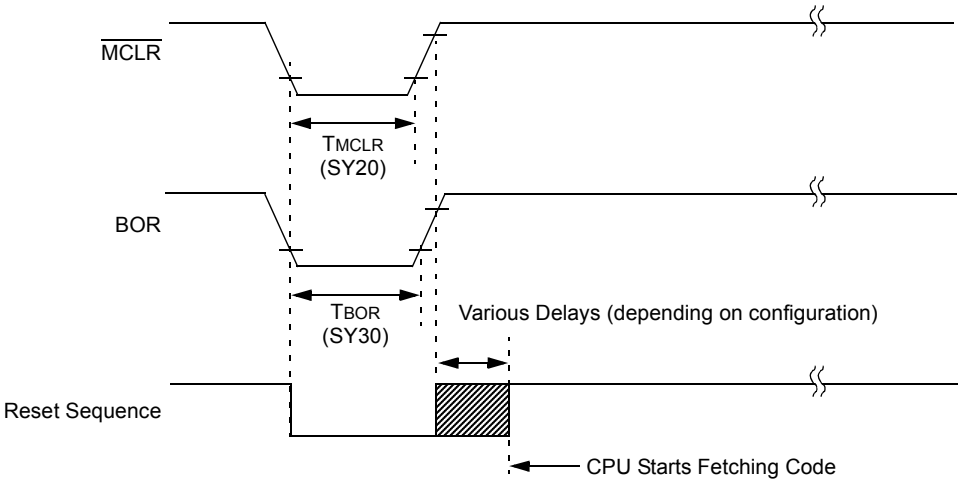

TABLE 31-26: RESET AND BROWN-OUT RESET REQUIREMENTS

Operating Conditions (unless otherwise stated):
3.0V ≤ VDD ≤ 3.6V,
-40°C ≤ TA ≤ +85°C for Industrial
-40°C ≤ TA ≤ +125°C for Extended

Param No.	Symbol	Characteristic(1)	Min.	Typ.(2)	Max.	Units
SY13	TIOZ	I/O High-Impedance from $\overline{\text{MCLR}}$ Low or Watchdog Timer Reset	—	1.5	—	μs
SY20	TMCLR	$\overline{\text{MCLR}}$ Pulse Width (low)	2	—	—	μs
SY30	TBOR	BOR Pulse Width (low)	1	—	—	μs
SY35	TFSCM	Fail-Safe Clock Monitor Delay	—	—	40	μs

Note 1: These parameters are characterized but not tested in manufacturing.
2: Data in the “Typ.” column are at 3.3V, +25°C unless otherwise stated.

FIGURE 31-5: HIGH-SPEED PWMx MODULE TIMING CHARACTERISTICS

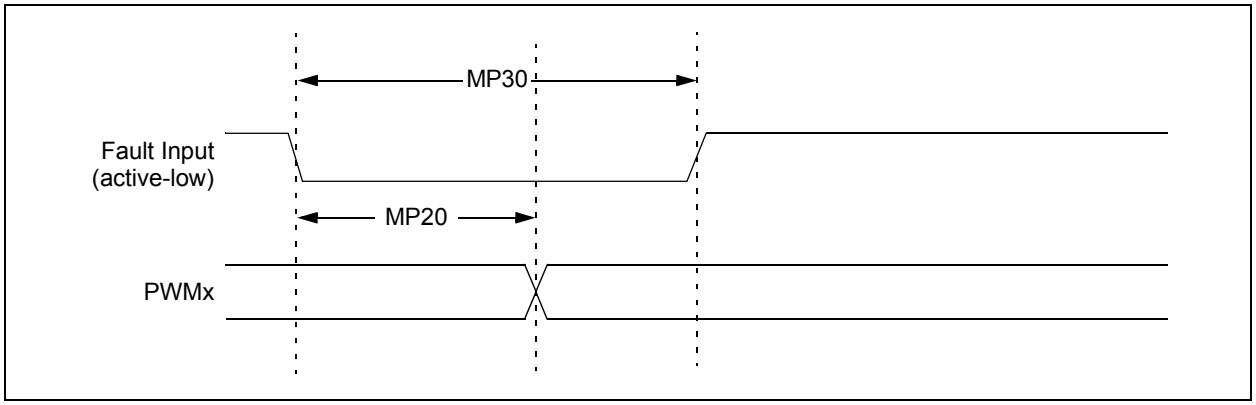

TABLE 31-27: HIGH-SPEED PWMx MODULE TIMING REQUIREMENTS

Operating Conditions (unless otherwise stated):
3.0V ≤ VDD ≤ 3.6V,
-40°C ≤ TA ≤ +85°C for Industrial
-40°C ≤ TA ≤ +125°C for Extended

Param No.	Symbol	Characteristic[1]	Min.	Max.	Units
MP10	FIN	PWM Input Frequency[2]	—	500	MHz
MP20	TFD	Fault Input ↓ to PWMx I/O Change	—	26	ns
MP30	TFH	Fault Input Pulse Width	8	—	ns

Note 1: These parameters are characterized but not tested in manufacturing.
2: Input frequency of 500 MHz must be used for High-Resolution mode.

© 2018-2019 Microchip Technology Inc.

FIGURE 31-6: SPIx MODULE MASTER MODE (CKE = 0) TIMING CHARACTERISTICS

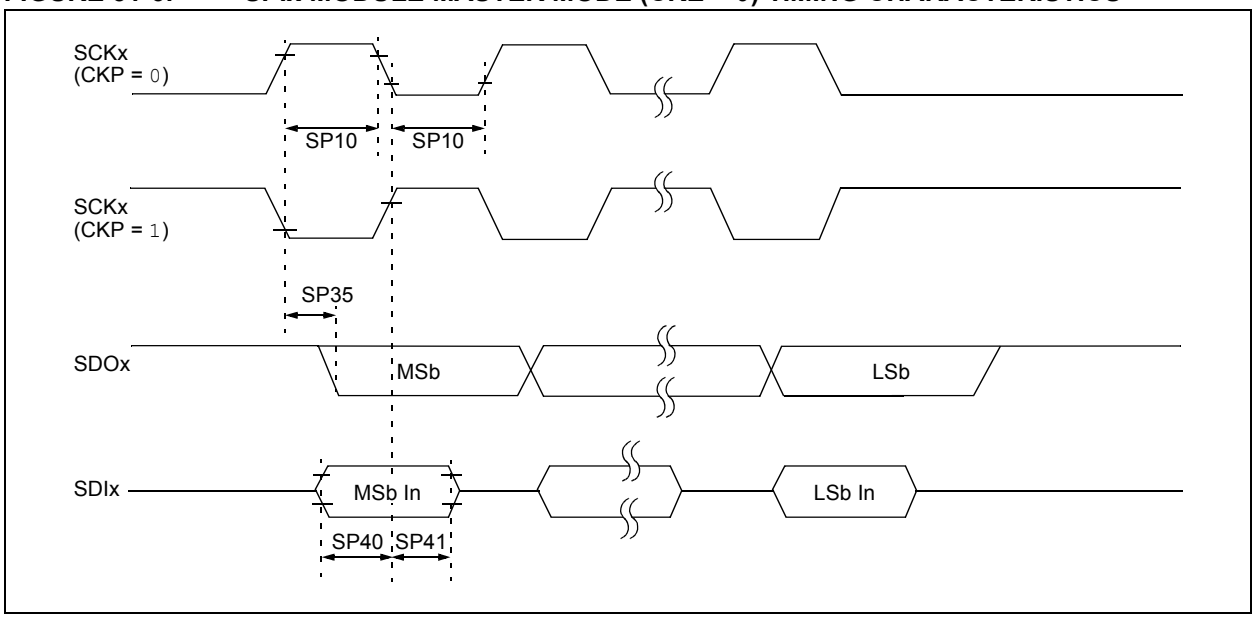

FIGURE 31-7: SPIx MODULE MASTER MODE (CKE = 1) TIMING CHARACTERISTICS

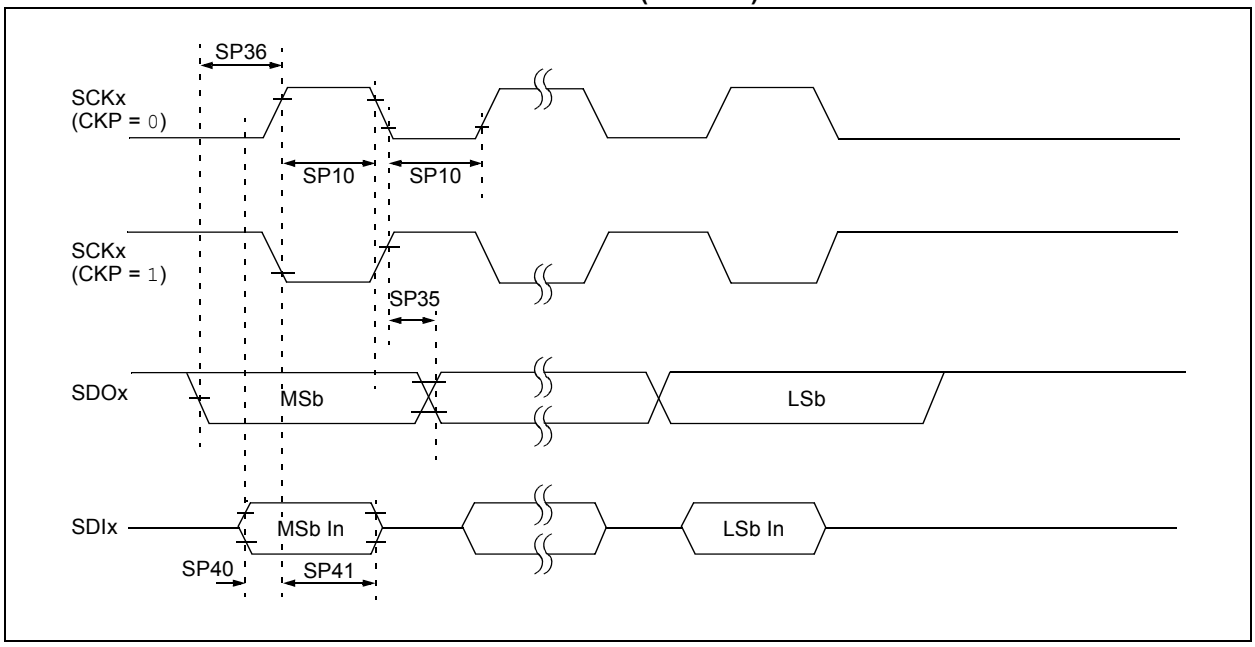

TABLE 31-28: SPIx MODULE MASTER MODE TIMING REQUIREMENTS

Operating Conditions (unless otherwise stated): 3.0V ≤ VDD ≤ 3.6V, -40°C ≤ TA ≤ +85°C for Industrial -40°C ≤ TA ≤ +125°C for Extended					
Param. No.	**Symbol**	**Characteristics(1)**	**Min**	**Max**	**Units**
SP10	TscL, TscH	SCKx Output Low or High Time	15	—	ns
SP35	TscH2doV, TscL2doV	SDOx Data Output Valid after SCKx Edge	—	20	ns
SP36	TdoV2sc, TdoV2scL	SDOx Data Output Setup to First SCKx Edge	3	—	ns
SP40	TdiV2scH, TdiV2scL	Setup Time of SDIx Data Input to SCKx Edge	10	—	ns
SP41	TscH2diL, TscL2diL	Hold Time of SDIx Data Input to SCKx Edge	15	—	ns

Note 1: These parameters are characterized but not tested in manufacturing.

FIGURE 31-8: SPIx MODULE SLAVE MODE (CKE = 0) TIMING CHARACTERISTICS

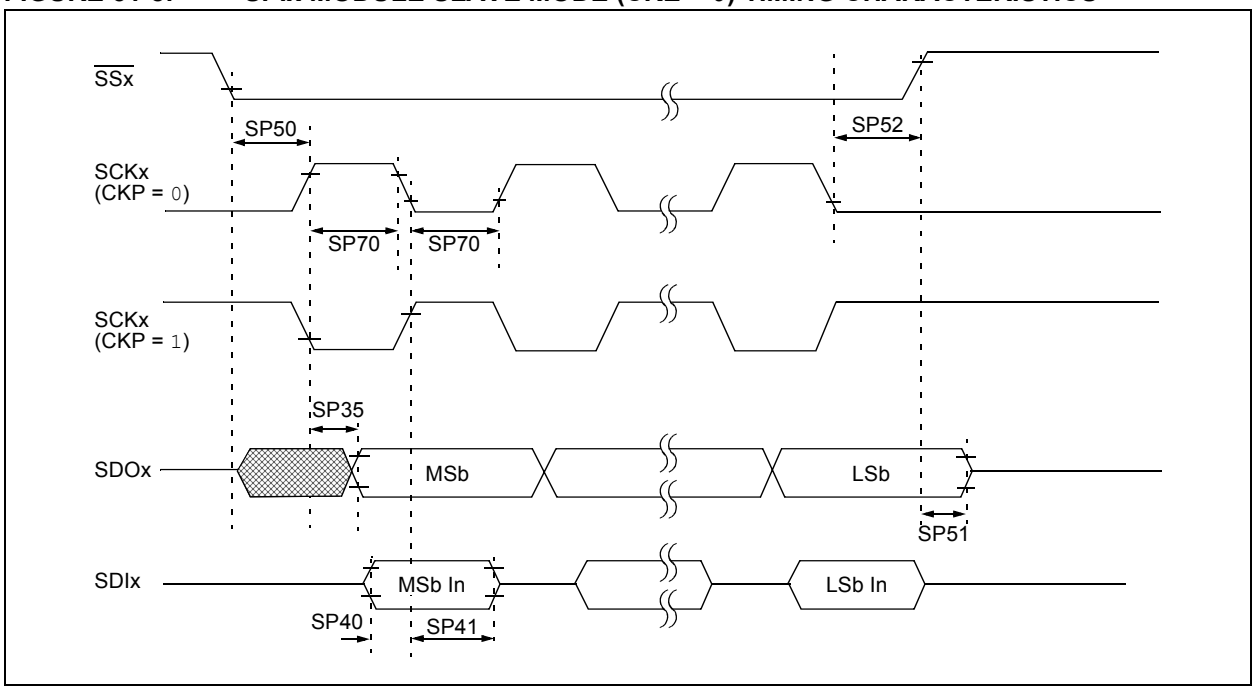

© 2018-2019 Microchip Technology Inc.

FIGURE 31-9: SPIx MODULE SLAVE MODE (CKE = 1) TIMING CHARACTERISTICS

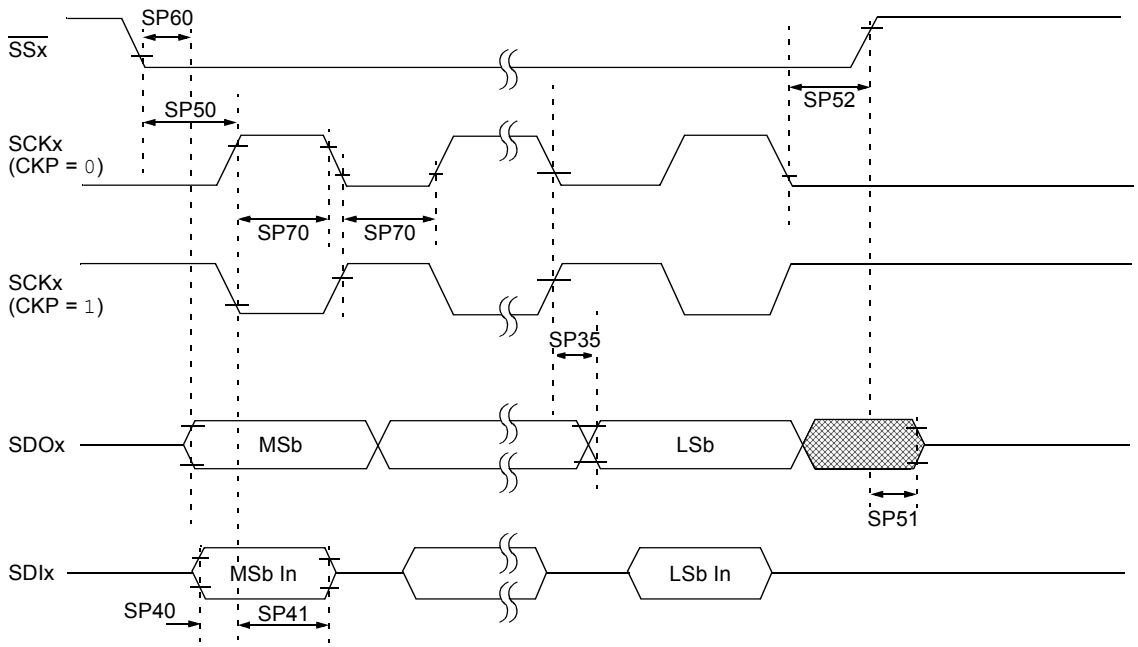

TABLE 31-29: SPIx MODULE SLAVE MODE TIMING REQUIREMENTS

Operating Conditions (unless otherwise stated):
3.0V ≤ VDD ≤ 3.6V,
-40°C ≤ TA ≤ +85°C for Industrial
-40°C ≤ TA ≤ +125°C for Extended

Param.No.	Symbol	Characteristics[1]	Min	Max	Units
SP70	TscL, TscH	SCKx Input Low Time or High Time	15	—	ns
SP35	TscH2doV, TscL2doV	SDOx Data Output Valid after SCKx Edge	—	20	ns
SP40	TdiV2scH, TdiV2scL	Setup Time of SDIx Data Input to SCKx Edge	10	—	ns
SP41	TscH2diL, TscL2diL	Hold Time of SDIx Data Input to SCKx Edge	15	—	ns
SP50	TssL2scH, TssL2scL	$\overline{SSx}$ ↓ to SCKx ↓ or SCKx ↑ Input	120	—	ns
SP51	TssH2doZ	$\overline{SSx}$ ↑ to SDOx Output High-Impedance	8	50	ns
SP52	TscH2ssH TscL2ssH	$\overline{SSx}$ ↑ after SCKx Edge	1.5 Tcy + 40	—	ns
SP60	TssL2doV	SDOx Data Output Valid after $\overline{SSx}$ Edge	—	50	ns

Note 1: These parameters are characterized but not tested in manufacturing.

FIGURE 31-10: I2Cx BUS START/STOP BITS TIMING CHARACTERISTICS (MASTER MODE)

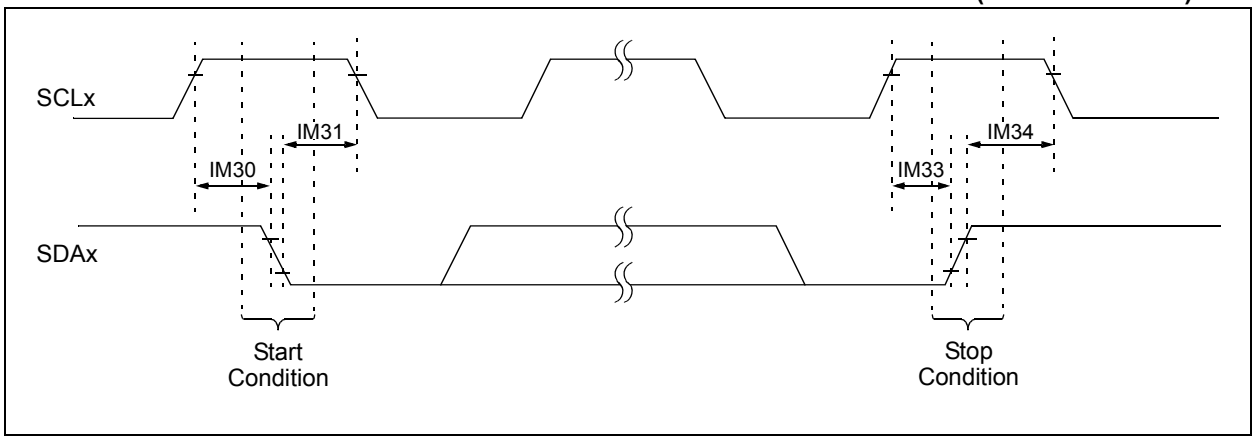

FIGURE 31-11: I2Cx BUS DATA TIMING CHARACTERISTICS (MASTER MODE)

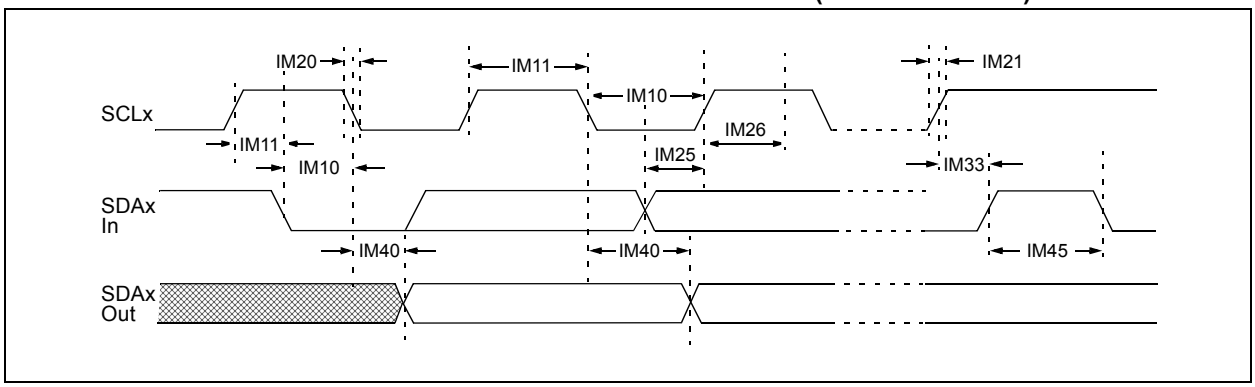

© 2018-2019 Microchip Technology Inc.

TABLE 31-30: I2Cx BUS DATA TIMING REQUIREMENTS (MASTER MODE)

Operating Conditions (unless otherwise stated):
3.0V ≤ VDD ≤ 3.6V,
-40°C ≤ TA ≤ +85°C for Industrial
-40°C ≤ TA ≤ +125°C for Extended

Param No.	Symbol	Characteristics		Min.(1)	Max.	Units	Conditions
IM10	TLO:SCL	Clock Low Time	100 kHz mode	TCY * (BRG + 1)	—	μs	
			400 kHz mode	TCY * (BRG + 1)	—	μs	
			1 MHz mode	TCY * (BRG + 1)	—	μs	
IM11	THI:SCL	Clock High Time	100 kHz mode	TCY * (BRG + 1)	—	μs	
			400 kHz mode	TCY * (BRG + 1)	—	μs	
			1 MHz mode	TCY * (BRG + 1)	—	μs	
IM20	TF:SCL	SDAx and SCLx Fall Time	100 kHz mode	—	300	ns	
			400 kHz mode	20 x (VDD/5.5V)	300	ns	
			1 MHz mode	20 x (VDD/5.5V)	120	ns	
IM21	TR:SCL	SDAx and SCLx Rise Time	100 kHz mode	—	1000	ns	
			400 kHz mode	20 + 0.1 CB	300	ns	
			1 MHz mode	—	120	ns	
IM25	TSU:DAT	Data Input Setup Time	100 kHz mode	250	—	ns	
			400 kHz mode	100	—	ns	
			1 MHz mode	50	—	ns	
IM26	THD:DAT	Data Input Hold Time	100 kHz mode	0	—	μs	
			400 kHz mode	0	0.9	μs	
			1 MHz mode	0	0.3	μs	
IM30	TSU:STA	Start Condition Setup Time	100 kHz mode	TCY * (BRG + 1)	—	μs	Only relevant for Repeated Start condition
			400 kHz mode	TCY * (BRG + 1)	—	μs	
			1 MHz mode	TCY * (BRG + 1)	—	μs	
IM31	THD:STA	Start Condition Hold Time	100 kHz mode	TCY * (BRG + 1)	—	μs	After this period, the first clock pulse is generated
			400 kHz mode	TCY * (BRG + 1)	—	μs	
			1 MHz mode	TCY * (BRG + 1)	—	μs	
IM33	TSU:STO	Stop Condition Setup Time	100 kHz mode	TCY * (BRG + 1)	—	μs	
			400 kHz mode	TCY * (BRG + 1)	—	μs	
			1 MHz mode	TCY * (BRG + 1)	—	μs	
IM34	THD:STO	Stop Condition Hold Time	100 kHz mode	TCY * (BRG + 1)	—	ns	
			400 kHz mode	TCY * (BRG + 1)	—	ns	
			1 MHz mode	TCY * (BRG + 1)	—	ns	
IM40	TAA:SCL	Output Valid from Clock	100 kHz mode	—	3450	ns	
			400 kHz mode	—	900	ns	
			1 MHz mode	—	450	ns	
IM45	TBF:SDA	Bus Free Time	100 kHz mode	4.7	—	μs	The amount of time the bus must be free before a new transmission can start
			400 kHz mode	1.3	—	μs	
			1 MHz mode	0.5	—	μs	
IM50	CB	Bus Capacitive Loading	100 kHz mode	—	400	pF	
			400 kHz mode	—	400	pF	
			1 MHz mode	—	10	pF	
IM51	TPGD	Pulse Gobbler Delay		65	390	ns	

Note 1: BRG is the value of the I^2C Baud Rate Generator.

FIGURE 31-12: I2Cx BUS START/STOP BITS TIMING CHARACTERISTICS (SLAVE MODE)

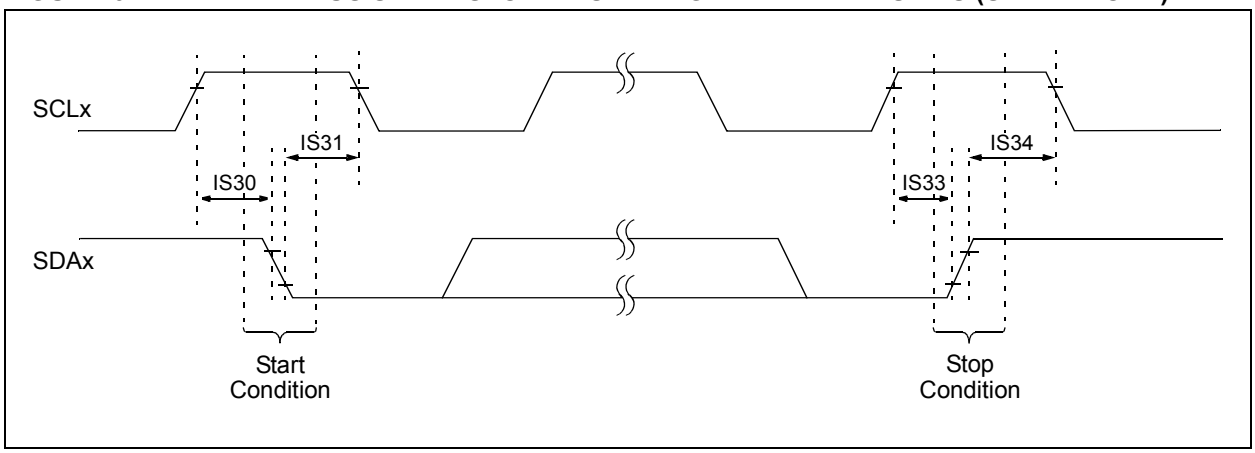

FIGURE 31-13: I2Cx BUS DATA TIMING CHARACTERISTICS (SLAVE MODE)

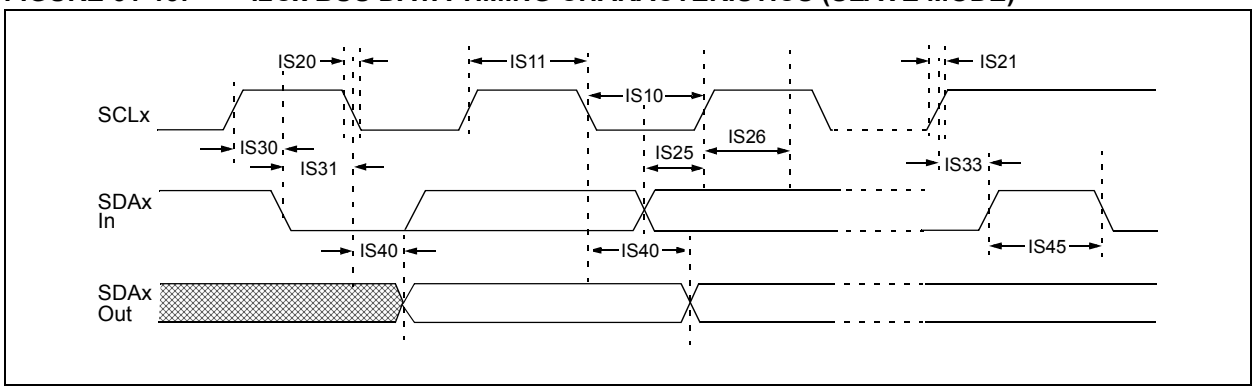

© 2018-2019 Microchip Technology Inc.

TABLE 31-31: I2Cx BUS DATA TIMING REQUIREMENTS (SLAVE MODE)

Operating Conditions (unless otherwise stated):
3.0V ≤ VDD ≤ 3.6V,
-40°C ≤ TA ≤ +85°C for Industrial
-40°C ≤ TA ≤ +125°C for Extended

Param No.	Symbol	Characteristics		Min.	Max.	Units	Conditions
IS10	TLO:SCL	Clock Low Time	100 kHz mode	4.7	—	μs	CPU clock must be minimum 800 kHz
			400 kHz mode	1.3	—	μs	CPU clock must be minimum 3.2 MHz
			1 MHz mode	0.5	—	μs	
IS11	THI:SCL	Clock High Time	100 kHz mode	4.0	—	μs	CPU clock must be minimum 800 kHz
			400 kHz mode	0.6	—	μs	CPU clock must be minimum 3.2 MHz
			1 MHz mode	0.26	—	μs	
IS20	TF:SCL	SDAx and SCLx Fall Time	100 kHz mode	—	300	ns	
			400 kHz mode	20 x (VDD/5.5V)	300	ns	
			1 MHz mode	20 x (VDD/5.5V)	120	ns	
IS21	TR:SCL	SDAx and SCLx Rise Time	100 kHz mode	—	1000	ns	
			400 kHz mode	20 + 0.1 CB	300	ns	
			1 MHz mode	—	120	ns	
IS25	TSU:DAT	Data Input Setup Time	100 kHz mode	250	—	ns	
			400 kHz mode	100	—	ns	
			1 MHz mode	50	—	ns	
IS26	THD:DAT	Data Input Hold Time	100 kHz mode	0	—	ns	
			400 kHz mode	0	0.9	μs	
			1 MHz mode	0	0.3	μs	
IS30	TSU:STA	Start Condition Setup Time	100 kHz mode	4.7	—	μs	Only relevant for Repeated Start condition
			400 kHz mode	0.6	—	μs	
			1 MHz mode	0.26	—	μs	
IS31	THD:STA	Start Condition Hold Time	100 kHz mode	4.0	—	μs	After this period, the first clock pulse is generated
			400 kHz mode	0.6	—	μs	
			1 MHz mode	0.26	—	μs	
IS33	TSU:STO	Stop Condition Setup Time	100 kHz mode	4.0	—	μs	
			400 kHz mode	0.6	—	μs	
			1 MHz mode	0.26	—	μs	
IS34	THD:STO	Stop Condition Hold Time	100 kHz mode	> 0	—	μs	
			400 kHz mode	> 0	—	μs	
			1 MHz mode	> 0	—	μs	
IS40	TAA:SCL	Output Valid from Clock	100 kHz mode	0	3.45	μs	
			400 kHz mode	0	0.9	μs	
			1 MHz mode	0	0.45	μs	
IS45	TBF:SDA	Bus Free Time	100 kHz mode	4.7	—	μs	The amount of time the bus must be free before a new transmission can start
			400 kHz mode	1.3	—	μs	
			1 MHz mode	0.5	—	μs	
IS50	CB	Bus Capacitive Loading	100 kHz mode	—	400	pF	
			400 kHz mode	—	400	pF	
			1 MHz mode	—	10	pF	

FIGURE 31-14: UARTx MODULE TIMING CHARACTERISTICS

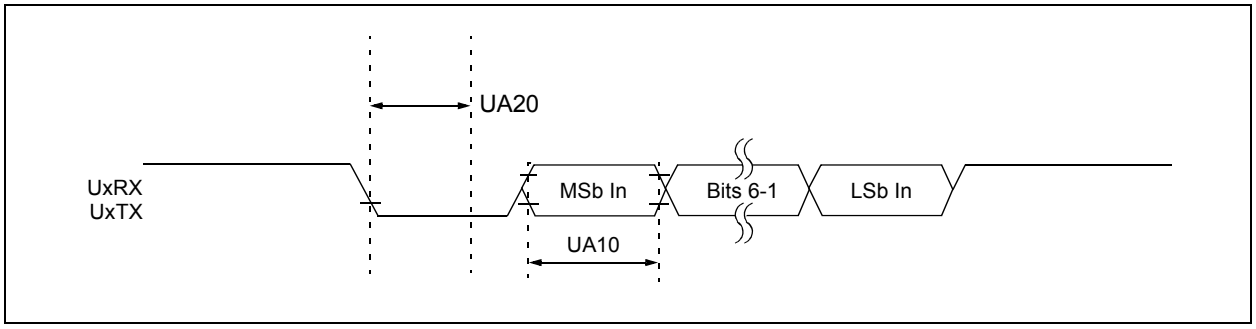

TABLE 31-32: UARTx MODULE TIMING REQUIREMENTS

Operating Conditions (unless otherwise stated):
3.0V ≤ VDD ≤ 3.6V,
-40°C ≤ TA ≤ +85°C for Industrial
-40°C ≤ TA ≤ +125°C for Extended

Param No.	Symbol	Characteristic[1]	Min.	Max.	Units
UA10	TUABAUD	UARTx Baud Time	40	—	ns
UA11	FBAUD	UARTx Baud Rate	—	25	Mbps
UA20	TCWF	Start Bit Pulse Width to Trigger UARTx Wake-up	50	—	ns

Note 1: These parameters are characterized but not tested in manufacturing.

© 2018-2019 Microchip Technology Inc.

TABLE 31-33: ADC MODULE SPECIFICATIONS

Operating Conditions (unless otherwise stated): 3.0V ≤ VDD ≤ 3.6V, -40°C ≤ TA ≤ +85°C for Industrial -40°C ≤ TA ≤ +125°C for Extended							
Param No.	**Symbol**	**Characteristics**	**Min.**	**Typ.(2)**	**Max.**	**Units**	**Conditions**
Analog Input							
AD12	VINH-VINL	Full-Scale Input Span	AVSS	—	AVDD	V	
AD14	VIN	Absolute Input Voltage	AVSS – 0.3	—	AVDD + 0.3	V	
AD17	RIN	Recommended Impedance of Analog Voltage Source	—	100	—	Ω	For minimum sampling time
AD66	VBG	Internal Band Gap Input Voltage	—	1.2	—	V	
ADC Accuracy							
AD20c	Nr	Resolution	12 data bits			bits	
AD21c	INL	Integral Nonlinearity	> -11.3	—	< 11.3	LSb	AVSS = 0V, AVDD = 3.3V
AD22c	DNL	Differential Nonlinearity	> -1.5	—	< 11.5	LSb	AVSS = 0V, AVDD = 3.3V
AD23c	GERR	Gain Error	> -12	—	< 12	LSb	AVSS = 0V, AVDD = 3.3V
AD24c	EOFF	Offset Error	> -7.5	—	< 7.5	LSb	AVSS = 0V, AVDD = 3.3V
AD25c	—	Monotonicity	—	—	—	—	Guaranteed
Dynamic Performance							
AD31b	SINAD(1)	Signal-to-Noise and Distortion	56	—	70	dB	
AD34b	ENOB(1)	Effective Number of Bits	9.0	—	11.4	bits	

Note 1: These parameters are characterized but not tested in manufacturing; characterized with a 1 kHz sine wave.

2: Data in “Typ.” column is at 3.3V, +25°C unless otherwise stated. Parameters are for design guidance only and are not tested.

TABLE 31-34: ANALOG-TO-DIGITAL CONVERSION TIMING REQUIREMENTS

Operating Conditions (unless otherwise stated): 3.0V ≤ VDD ≤ 3.6V, -40°C ≤ TA ≤ +85°C for Industrial -40°C ≤ TA ≤ +125°C for Extended					
Param No.	**Symbol**	**Characteristics**	**Min.**	**Max.**	**Units**
AD50	TAD	ADC Clock Period	14.28	—	ns
AD51	FTP	ADC Throughput Rate (for all channels)	—	3.5	Msps

TABLE 31-35: HIGH-SPEED ANALOG COMPARATOR MODULE SPECIFICATIONS

Operating Conditions (unless otherwise stated): 3.0V ≤ VDD ≤ 3.6V, -40°C ≤ TA ≤ +85°C for Industrial -40°C ≤ TA ≤ +125°C for Extended							
Param No.	**Symbol**	**Characteristic**	**Min.**	**Typ.**	**Max.**	**Units**	**Comments**
CM09	FIN	Input Frequency	400	500	550	MHz	
CM10	VIOFF	Input Offset Voltage	—	±5	—	mV	
CM11	VICM	Input Common-Mode Voltage Range(1)	AVSS	—	AVDD	V	
CM13	CMRR	Common-Mode Rejection Ratio(1)	65	—	—	dB	
CM14	TRESP	Large Signal Response	—	15	—	ns	V+ input step of 100 mV while V- input is held at AVDD/2
CM15	VHYST	Input Hysteresis	15	—	45	mV	Depends on HYSSEL[1:0]

Note 1: These parameters are for design guidance only and are not tested in manufacturing.

© 2018-2019 Microchip Technology Inc.

TABLE 31-36: DAC MODULE SPECIFICATIONS

Operating Conditions (unless otherwise stated): 3.0V ≤ VDD ≤ 3.6V, -40°C ≤ TA ≤ +85°C for Industrial -40°C ≤ TA ≤ +125°C for Extended							
Param No.	**Symbol**	**Characteristic**	**Min.**	**Typ.(1)**	**Max.**	**Units**	**Comments**
DA02	CVRES	Resolution	12			bits	
DA03	INL	Integral Nonlinearity Error	-38	—	0	LSB	
DA04	DNL	Differential Nonlinearity Error	-5	—	5	LSB	
DA05	EOFF	Offset Error	-3.5	—	21.5	LSB	
DA06	EG	Gain Error	0	—	41	%	
DA07	TSET	Settling Time	—	750	—	ns	Output with 2% of desired output voltage with a 10-90% or 90-10% step
DA08	VOUT	Voltage Output Range	0.165	—	3.135	V	VDD = 3.3V

Note 1: Data in the “Typ.” column are 3.3V, +25°C unless otherwise stated. Parameters are for design guidance only and are not tested.

TABLE 31-37: DAC OUTPUT (DACOUT PIN) SPECIFICATIONS

Operating Conditions (unless otherwise stated): 3.0V ≤ VDD ≤ 3.6V, -40°C ≤ TA ≤ +85°C for Industrial -40°C ≤ TA ≤ +125°C for Extended							
Param No.	**Symbol**	**Characteristic**	**Min.**	**Typ.**	**Max.**	**Units**	**Comments**
DA11	RLOAD	Resistive Output Load Impedance	10K	—	—	Ohm	
DA11a	CLOAD	Output Load Capacitance	—	—	35	pF	Including output pin capacitance
DA12	IOUT	Output Current Drive Strength	—	3	—	mA	Sink and source

TABLE 31-38: CURRENT BIAS GENERATOR SPECIFICATIONS(1)

Operating Conditions (unless otherwise stated):
3.0V ≤ VDD ≤ 3.6V,
-40°C ≤ TA ≤ +85°C for Industrial
-40°C ≤ TA ≤ +125°C for Extended

ParamNo.	Symbol	Characteristic	Min.	Max.	Units
CC03	I_{10SRC}	10 µA Source Current	9	11	µA
CC04	I_{50SRC}	50 µA Source Current	45	55	µA
CC05	I_{50SNK}	50 µA Sink Current	-45	-55	µA

Note 1: Parameters are characterized but not tested in manufacturing.

TABLE 31-39: OPERATIONAL AMPLIFIER SPECIFICATIONS(1)

Operating Conditions (unless otherwise stated):
3.0V ≤ VDD ≤ 3.6V,
-40°C ≤ TA ≤ +85°C for Industrial
-40°C ≤ TA ≤ +125°C for Extended

Param No.	Sym	Characteristic	Min	Typ	Max	Units	Comments
OAMP1	GBWP	Gain Bandwidth Product	—	20	—	MHz	
OAMP2	SR	Slew Rate	—	40	—	V/µs	
OAMP3	V_{IOFF}	Input Offset Voltage	-20	—	20	mV	
OAMP4	V_{ICM}	Common-Mode Input Voltage Range	AV_{SS}	—	AV_{DD}	V	NCHDISx = 0
			AV_{SS}	—	2.8	V	NCHDISx = 1
OAMP5	CMRR	Common-Mode Rejection Ratio	—	68	—	db	
OAMP6	PSRR	Power Supply Rejection Ratio	—	74	—	dB	
OAMP7	V_{OR}	Output Voltage Range	AV_{SS}	—	AV_{DD}	mV	0.5V input overdrive, no output loading

Note 1: Parameters are for design guidance only and are not tested in manufacturing.

© 2018-2019 Microchip Technology Inc.

32.0 PACKAGING INFORMATION

32.1 Package Marking Information

28-Lead SSOP (5.30 mm)

Example

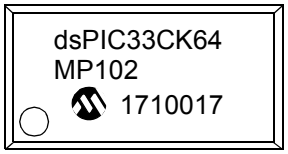

28-Lead UQFN (4x4 mm)

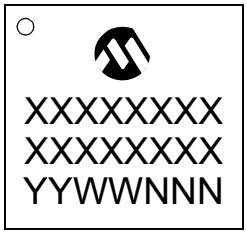

Example

28-Lead UQFN (6x6 mm)

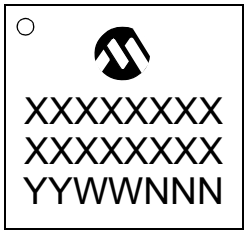

Example

36-Lead UQFN (5x5 mm)

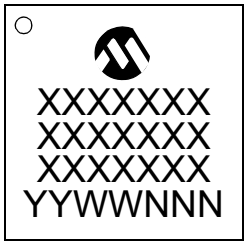

Example

Legend:	XX...X	Customer-specific information
	Y	Year code (last digit of calendar year)
	YY	Year code (last 2 digits of calendar year)
	WW	Week code (week of January 1 is week ‘01’)
	NNN	Alphanumeric traceability code

Note: In the event the full Microchip part number cannot be marked on one line, it will be carried over to the next line, thus limiting the number of available characters for customer-specific information.

32.1 Package Marking Information (Continued)

48-Lead TQFP (7x7 mm)

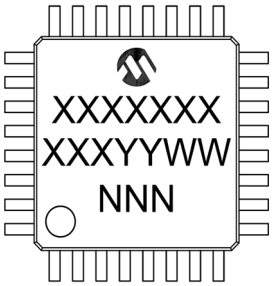

Example

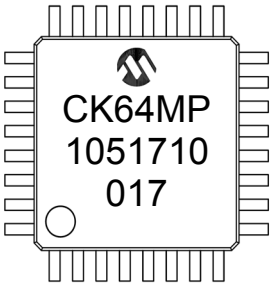

48-Lead UQFN (6x6 mm)

Example

© 2018-2019 Microchip Technology Inc.

32.2 Package Details

28-Lead Plastic Shrink Small Outline (SS) – 5.30 mm Body [SSOP]

Note: For the most current package drawings, please see the Microchip Packaging Specification located at http://www.microchip.com/packaging

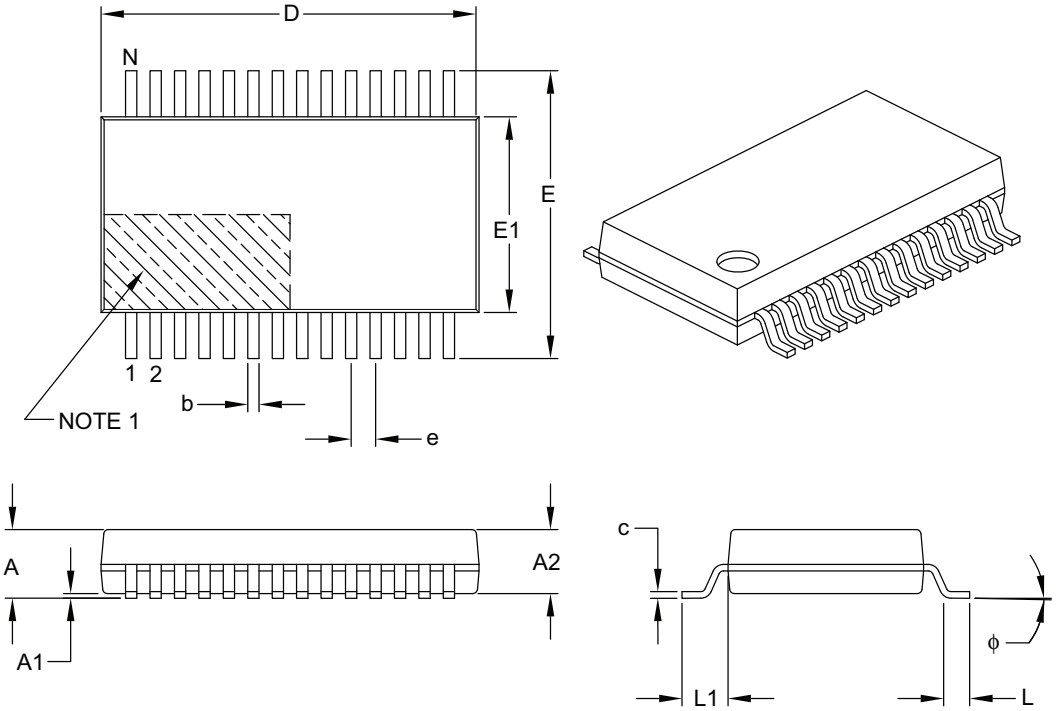

Units		MILLIMETERS		
Dimension Limits		MIN	NOM	MAX
Number of Pins	N	28		
Pitch	e	0.65 BSC		
Overall Height	A	–	–	2.00
Molded Package Thickness	A2	1.65	1.75	1.85
Standoff	A1	0.05	–	–
Overall Width	E	7.40	7.80	8.20
Molded Package Width	E1	5.00	5.30	5.60
Overall Length	D	9.90	10.20	10.50
Foot Length	L	0.55	0.75	0.95
Footprint	L1	1.25 REF		
Lead Thickness	c	0.09	–	0.25
Foot Angle	ϕ	0°	4°	8°
Lead Width	b	0.22	–	0.38

Notes:

1. Pin 1 visual index feature may vary, but must be located within the hatched area.
2. Dimensions D and E1 do not include mold flash or protrusions. Mold flash or protrusions shall not exceed 0.20 mm per side.
3. Dimensioning and tolerancing per ASME Y14.5M.

   BSC: Basic Dimension. Theoretically exact value shown without tolerances.
   REF: Reference Dimension, usually without tolerance, for information purposes only.

Microchip Technology Drawing C04-073B

28-Lead Plastic Shrink Small Outline (SS) - 5.30 mm Body [SSOP]

Note: For the most current package drawings, please see the Microchip Packaging Specification located at http://www.microchip.com/packaging

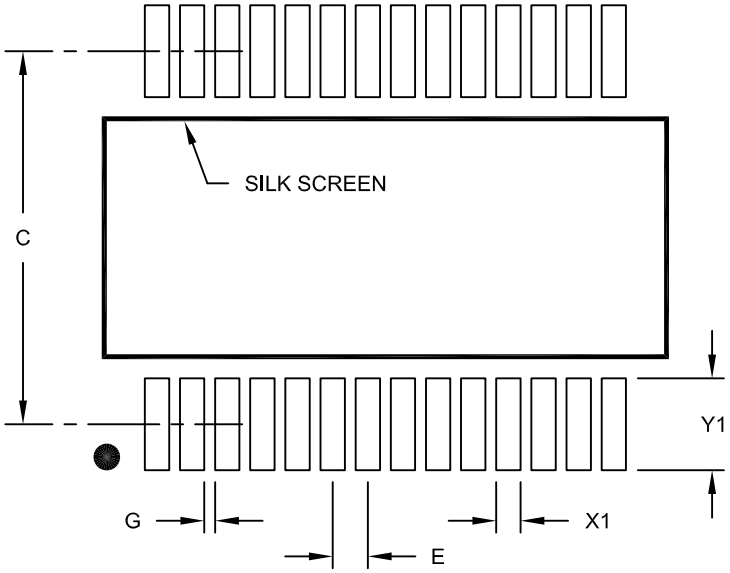

RECOMMENDED LAND PATTERN

Units		MILLIMETERS		
Dimension Limits		MIN	NOM	MAX
Contact Pitch	E	0.65 BSC		
Contact Pad Spacing	C		7.20	
Contact Pad Width (X28)	X1			0.45
Contact Pad Length (X28)	Y1			1.75
Distance Between Pads	G	0.20		

Notes:

1. Dimensioning and tolerancing per ASME Y14.5M
   BSC: Basic Dimension. Theoretically exact value shown without tolerances.

Microchip Technology Drawing No. C04-2073A

© 2018-2019 Microchip Technology Inc.

28-Lead Ultra Thin Plastic Quad Flat, No Lead Package (M6) - 4x4x0.6 mm Body [UQFN] With Corner Anchors

Note: For the most current package drawings, please see the Microchip Packaging Specification located at http://www.microchip.com/packaging

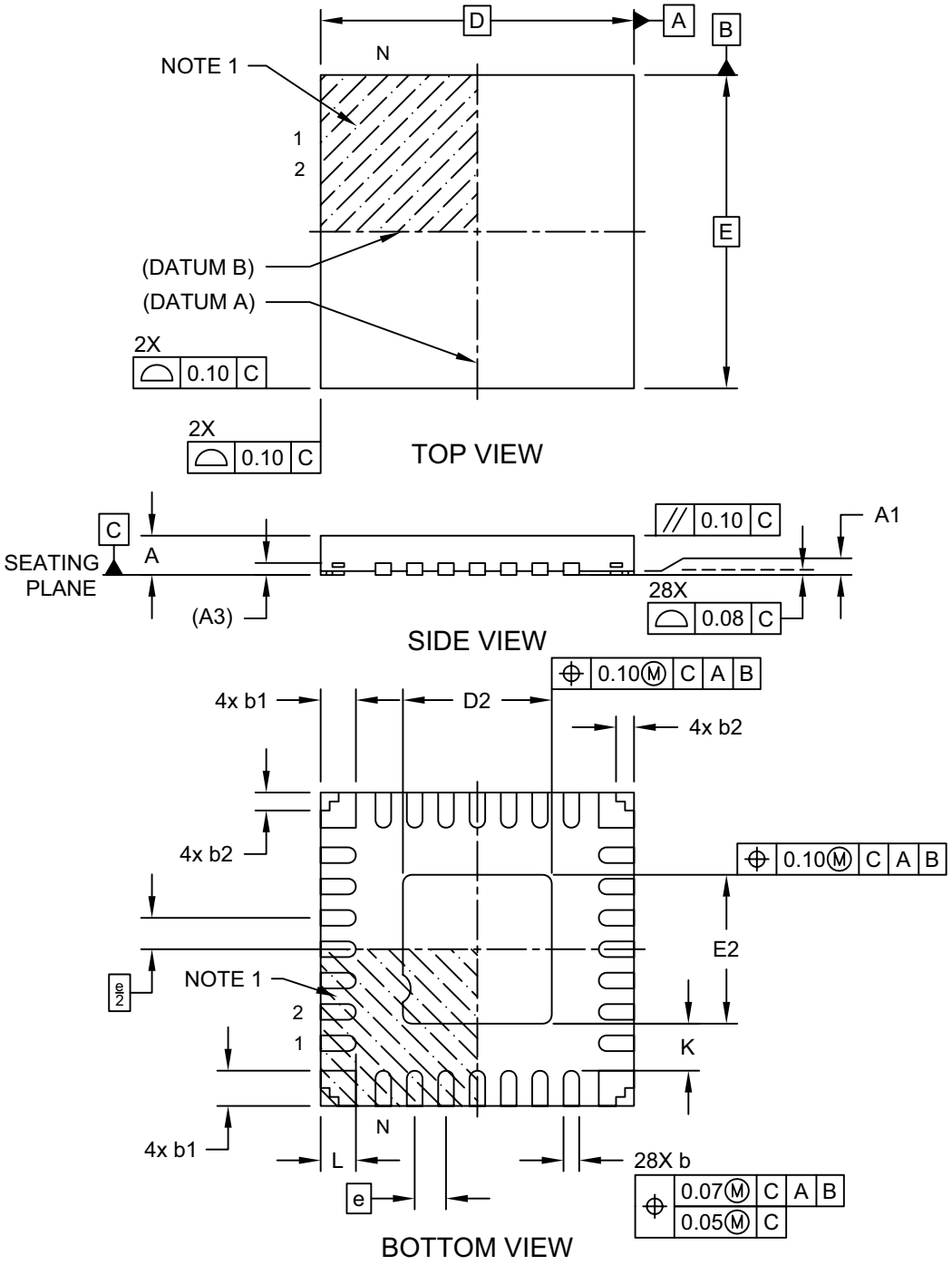

Microchip Technology Drawing C04-333-M6 Rev B Sheet 1 of 2

28-Lead Ultra Thin Plastic Quad Flat, No Lead Package (M6) - 4x4x0.6 mm Body [UQFN] With Corner Anchors

Note: For the most current package drawings, please see the Microchip Packaging Specification located at http://www.microchip.com/packaging

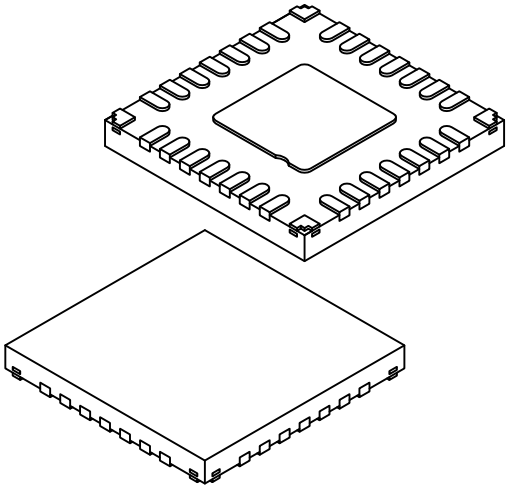

Units		MILLIMETERS		
Dimension Limits		MIN	NOM	MAX
Number of Pins	N	28		
Pitch	e	0.40 BSC		
Overall Height	A	-	-	0.60
Standoff	A1	0.00	0.02	0.05
Terminal Thickness	A3	0.152 REF		
Overall Width	E	4.00 BSC		
Exposed Pad Width	E2	1.80	1.90	2.00
Overall Length	D	4.00 BSC		
Exposed Pad Length	D2	1.80	1.90	2.00
Terminal Width	b	0.15	0.20	0.25
Corner Anchor Pad	b1	0.40	0.45	0.50
Corner Pad, Metal Free Zone	b2	0.18	0.23	0.28
Terminal Length	L	0.30	0.45	0.50
Terminal-to-Exposed-Pad	K	-	0.60	-

Notes:

1. Pin 1 visual index feature may vary, but must be located within the hatched area.
2. Package is saw singulated
3. Dimensioning and tolerancing per ASME Y14.5M

   BSC: Basic Dimension. Theoretically exact value shown without tolerances.

   REF: Reference Dimension, usually without tolerance, for information purposes only.

Microchip Technology Drawing C04-333-M6 Rev A Sheet 2 of 2

© 2018-2019 Microchip Technology Inc.

28-Lead Ultra Thin Plastic Quad Flat, No Lead Package (M6) - 4x4x0.6 mm Body [UQFN] With Corner Anchors

Note: For the most current package drawings, please see the Microchip Packaging Specification located at http://www.microchip.com/packaging

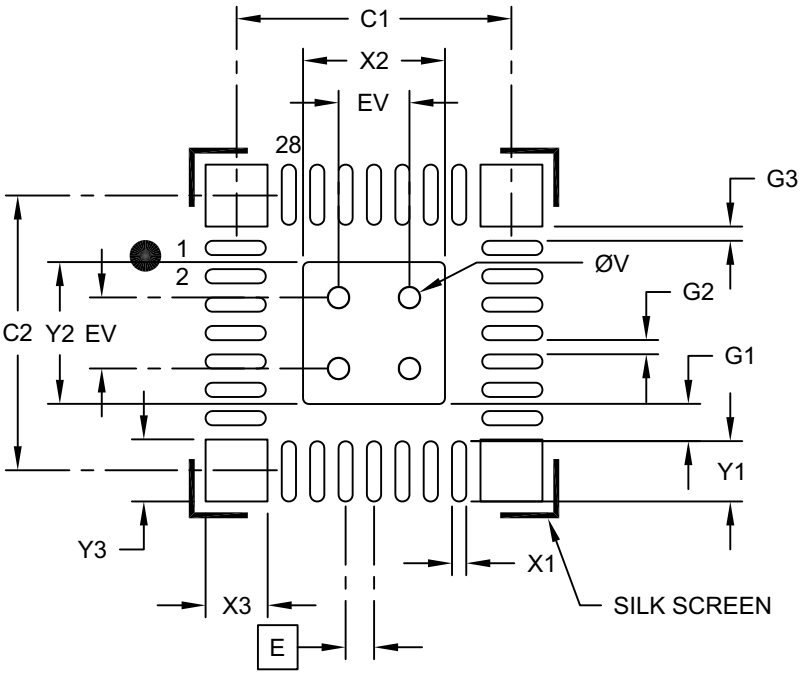

RECOMMENDED LAND PATTERN

Units		MILLIMETERS		
Dimension Limits		MIN	NOM	MAX
Contact Pitch	E		0.40 BSC	
Center Pad Width	X2			2.00
Center Pad Length	Y2			2.00
Contact Pad Spacing	C1		3.90	
Contact Pad Spacing	C2		3.90	
Contact Pad Width (X28)	X1			0.20
Contact Pad Length (X28)	Y1			0.85
Contact Pad to Center Pad (X28)	G1		0.52	
Contact Pad to Pad (X24)	G2	0.20		
Contact Pad to Corner Pad (X8)	G3	0.20		
Corner Anchor Width (X4)	X3			0.78
Corner Anchor Length (X4)	Y3			0.78
Thermal Via Diameter	V		0.30	
Thermal Via Pitch	EV		1.00	

Notes:

1. Dimensioning and tolerancing per ASME Y14.5M

   BSC: Basic Dimension. Theoretically exact value shown without tolerances.

Microchip Technology Drawing C04-2333-M6 Rev B

28-Lead Ultra Thin Plastic Quad Flat, No Lead Package (2N) - 6x6x0.55 mm Body [UQFN] With 4.65x4.65 mm Exposed Pad and Corner Anchors

Note:	For the most current package drawings, please see the Microchip Packaging Specification located at http://www.microchip.com/packaging

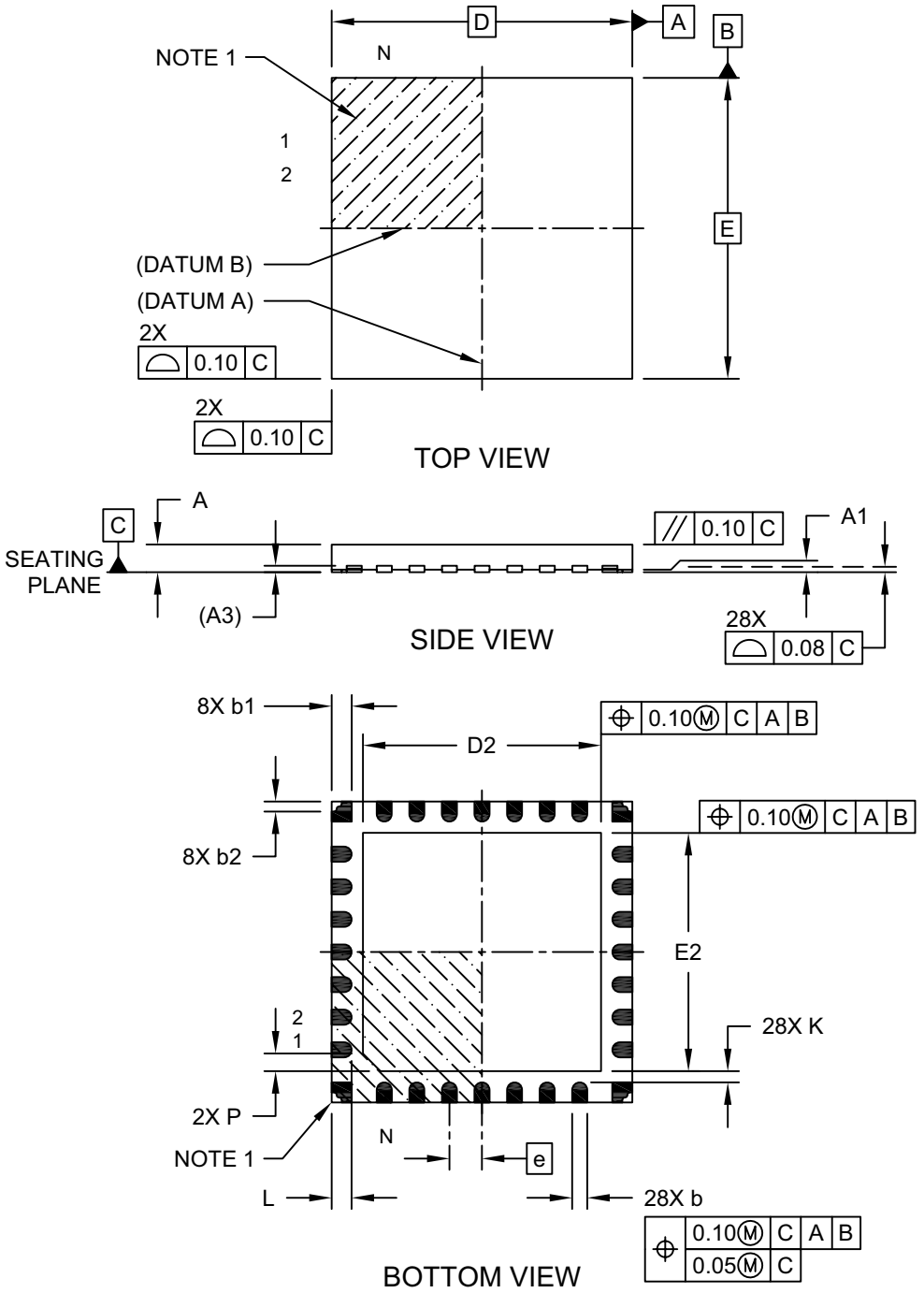

Microchip Technology Drawing C04-385B Sheet 1 of 2

© 2018-2019 Microchip Technology Inc.

28-Lead Ultra Thin Plastic Quad Flat, No Lead Package (2N) - 6x6x0.55 mm Body [UQFN] With 4.65x4.65 mm Exposed Pad and Corner Anchors

Note: For the most current package drawings, please see the Microchip Packaging Specification located at http://www.microchip.com/packaging

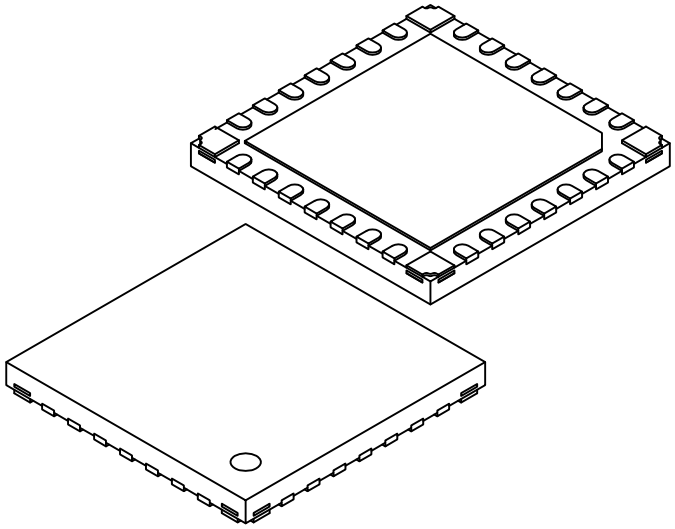

Units		MILLIMETERS		
Dimension Limits		MIN	NOM	MAX
Number of Terminals	N	28		
Pitch	e	0.65 BSC		
Overall Height	A	0.45	0.50	0.55
Standoff	A1	0.00	0.02	0.05
Terminal Thickness	A3	0.127 REF		
Overall Width	E	6.00 BSC		
Exposed Pad Width	E2	4.55	4.65	4.75
Overall Length	D	6.00 BSC		
Exposed Pad Length	D2	4.55	4.65	4.75
Exposed Pad Corner Chamfer	P	-	0.35	-
Terminal Width	b	0.25	0.30	0.35
Corner Anchor Pad	b1	0.35	0.40	0.43
Corner Pad, Metal Free Zone	b2	0.15	0.20	0.25
Terminal Length	L	0.30	0.40	0.50
Terminal-to-Exposed-Pad	K	0.20	-	-

Notes:

1. Pin 1 visual index feature may vary, but must be located within the hatched area.
2. Package is saw singulated
3. Dimensioning and tolerancing per ASME Y14.5M

   BSC: Basic Dimension. Theoretically exact value shown without tolerances.

   REF: Reference Dimension, usually without tolerance, for information purposes only.

Microchip Technology Drawing C04-385B Sheet 2 of 2

28-Lead Ultra Thin Plastic Quad Flat, No Lead Package (2N) - 6x6x0.55 mm Body [UQFN] With 4.65x4.65 mm Exposed Pad and Corner Anchors

Note: For the most current package drawings, please see the Microchip Packaging Specification located at http://www.microchip.com/packaging

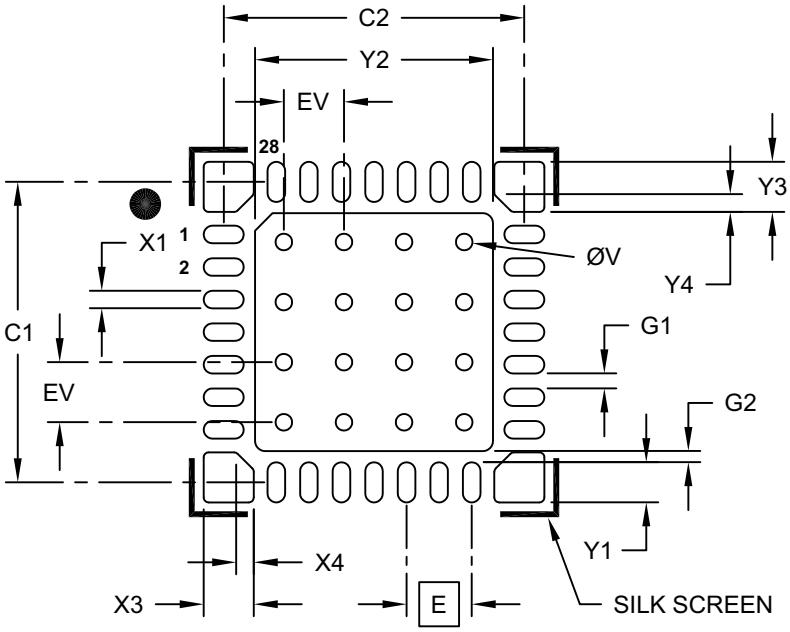

RECOMMENDED LAND PATTERN

Units		MILLIMETERS		
Dimension Limits		MIN	NOM	MAX
Contact Pitch	E		0.65 BSC	
Optional Center Pad Width	X2			4.75
Optional Center Pad Length	Y2			4.75
Contact Pad Spacing	C1		6.00	
Contact Pad Spacing	C2		6.00	
Contact Pad Width (X28)	X1			0.35
Contact Pad Length (X28)	Y1			0.80
Corner Anchor (X4)	X3			1.00
Corner Anchor (X4)	Y3			1.00
Corner Anchor Chamfer (X4)	X4			0.35
Corner Anchor Chamfer (X4)	Y4			0.35
Contact Pad to Pad (X28)	G1	0.20		
Contact Pad to Center Pad (X28)	G2	0.20		
Thermal Via Diameter	V		0.33	
Thermal Via Pitch	EV		1.20	

Notes:

1. Dimensioning and tolerancing per ASME Y14.5M
   BSC: Basic Dimension. Theoretically exact value shown without tolerances.
2. For best soldering results, thermal vias, if used, should be filled or tented to avoid solder loss during reflow process

Microchip Technology Drawing C04-2385B

© 2018-2019 Microchip Technology Inc.

36-Lead Ultra Thin Plastic Quad Flat, No Lead Package (M5) - 5x5 mm Body [UQFN] With Corner Anchors

Note: For the most current package drawings, please see the Microchip Packaging Specification located at http://www.microchip.com/packaging

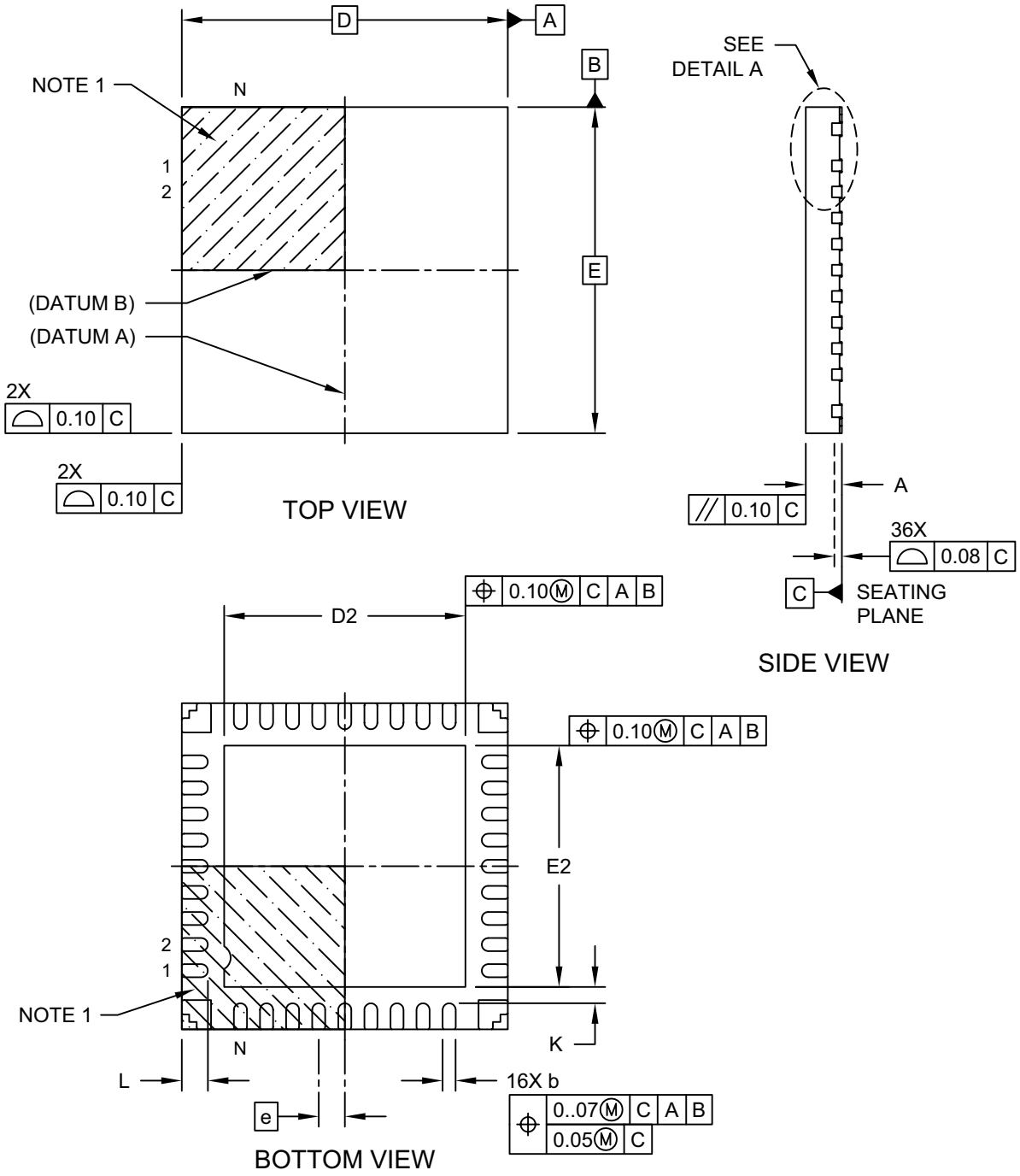

Microchip Technology Drawing C04-436A–M5 Sheet 1 of 2

36-Lead Ultra Thin Plastic Quad Flat, No Lead Package (M5) - 5x5 mm Body [UQFN] With Corner Anchors

Note: For the most current package drawings, please see the Microchip Packaging Specification located at http://www.microchip.com/packaging

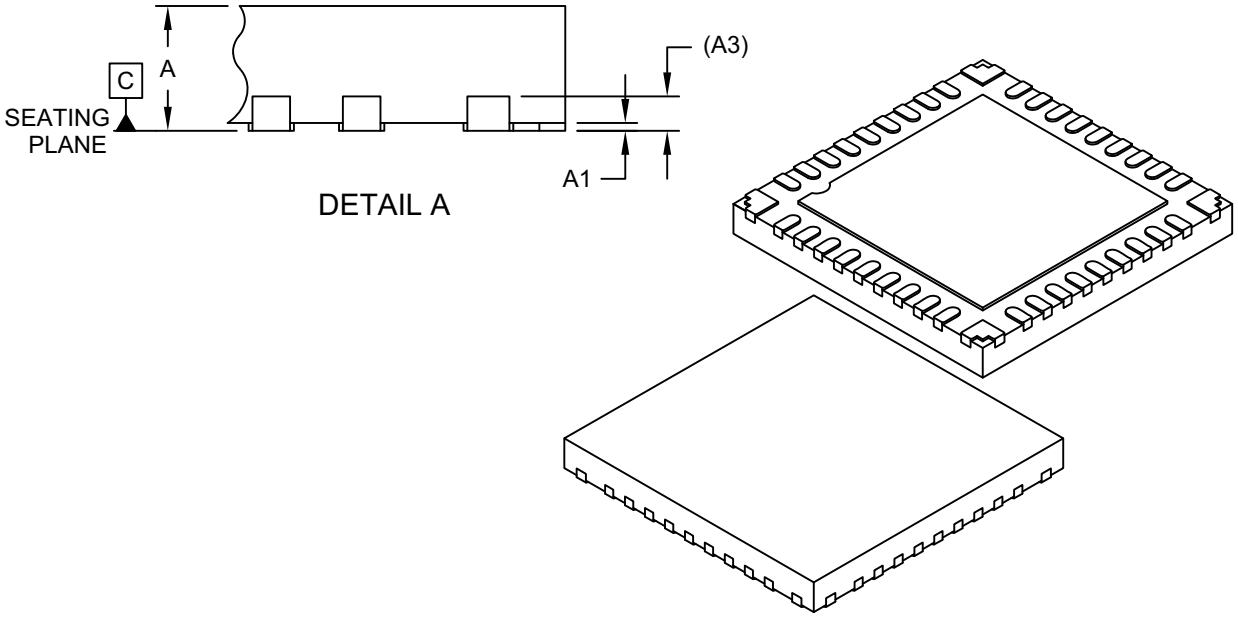

Units		MILLIMETERS		
Dimension Limits		MIN	NOM	MAX
Number of Terminals	N	36		
Pitch	e	0.40 BSC		
Overall Height	A	0.50	0.55	0.60
Standoff	A1	0.00	0.02	0.05
Terminal Thickness	A3	0.152 REF		
Overall Length	D	5.00 BSC		
Exposed Pad Length	D2	3.60	3.70	3.80
Overall Width	E	5.00 BSC		
Exposed Pad Width	E2	3.60	3.70	3.80
Terminal Width	b	0.15	0.20	0.25
Terminal Length	L	0.30	0.40	0.50
Terminal-to-Exposed-Pad	K	0.25 REF		

Notes:

1. Pin 1 visual index feature may vary, but must be located within the hatched area.
2. Package is saw singulated
3. Dimensioning and tolerancing per ASME Y14.5M

   BSC: Basic Dimension. Theoretically exact value shown without tolerances.

   REF: Reference Dimension, usually without tolerance, for information purposes only.

Microchip Technology Drawing C04-436A–M5 Sheet 2 of 2

© 2018-2019 Microchip Technology Inc.

36-Lead Ultra Thin Plastic Quad Flat, No Lead Package (M5) - 5x5 mm Body [UQFN] With Corner Anchors

Note: For the most current package drawings, please see the Microchip Packaging Specification located at http://www.microchip.com/packaging

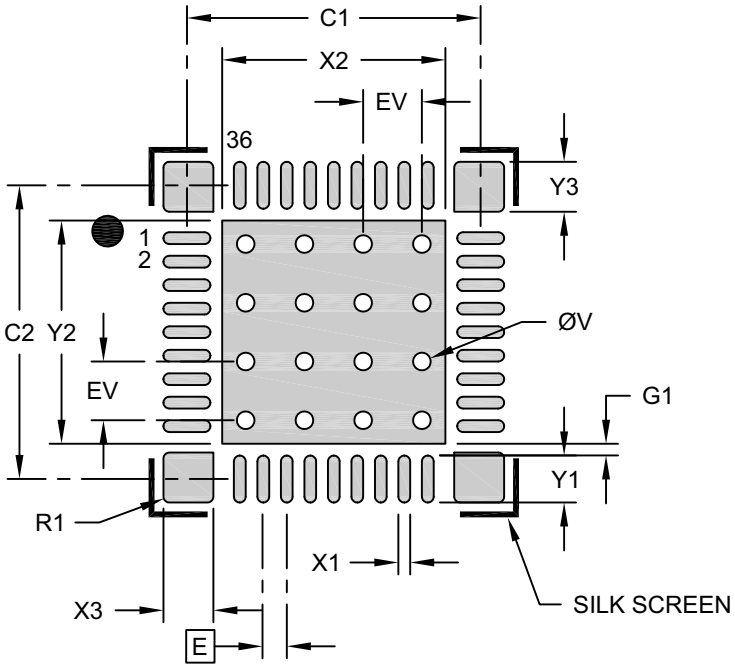

RECOMMENDED LAND PATTERN

Units		MILLIMETERS		
Dimension Limits		MIN	NOM	MAX
Contact Pitch	E		0.40 BSC	
Optional Center Pad Width	X2			3.80
Optional Center Pad Length	Y2			3.80
Contact Pad Spacing	C1		5.00	
Contact Pad Spacing	C2		5.00	
Contact Pad Width (X36)	X1			0.20
Contact Pad Length (X36)	Y1			0.80
Corner Pad Width (X4)	X3			0.20
Corner Pad Length (X36)	Y3			0.85
Corner Pad Radius	R1		0.10	
Contact Pad to Center Pad (X36)	G1	0.20		
Thermal Via Diameter	V		0.30	
Thermal Via Pitch	EV		1.00	

Notes:

1. Dimensioning and tolerancing per ASME Y14.5M
   BSC: Basic Dimension. Theoretically exact value shown without tolerances.
2. For best soldering results, thermal vias, if used, should be filled or tented to avoid solder loss during reflow process

Microchip Technology Drawing C04-2436A–M5

48-Lead Thin Quad Flatpack (PT) - 7x7x1.0 mm Body [TQFP]

Note: For the most current package drawings, please see the Microchip Packaging Specification located at http://www.microchip.com/packaging

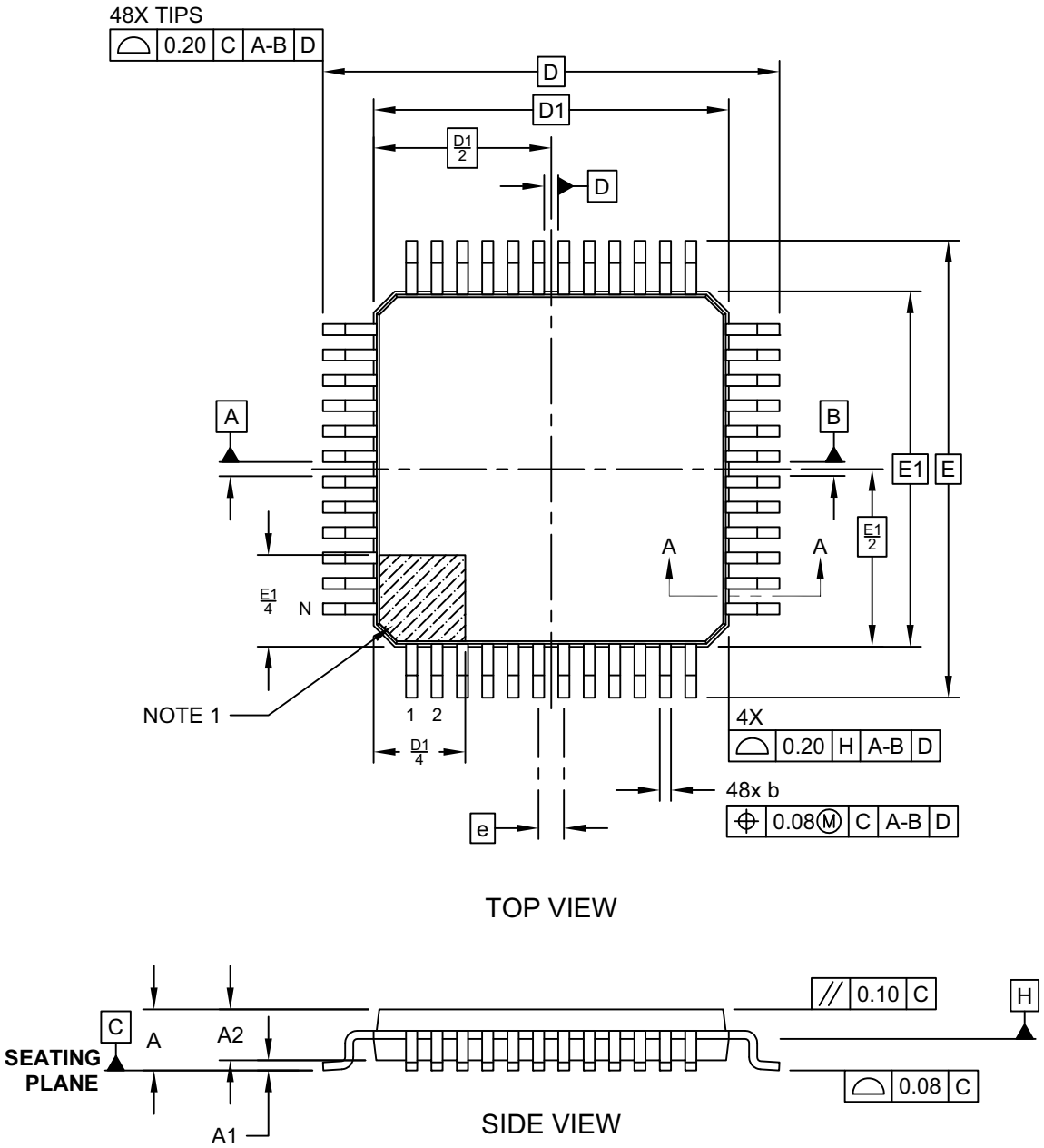

Microchip Technology Drawing C04-300-PT Rev A Sheet 1 of 2

© 2018-2019 Microchip Technology Inc.

48-Lead Thin Quad Flatpack (PT) - 7x7x1.0 mm Body [TQFP]

Note: For the most current package drawings, please see the Microchip Packaging Specification located at http://www.microchip.com/packaging

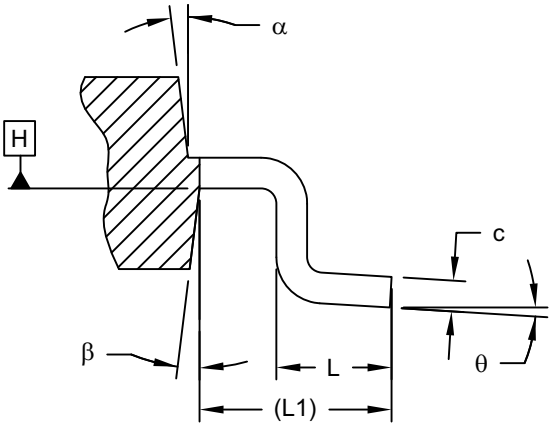

SECTION A-A

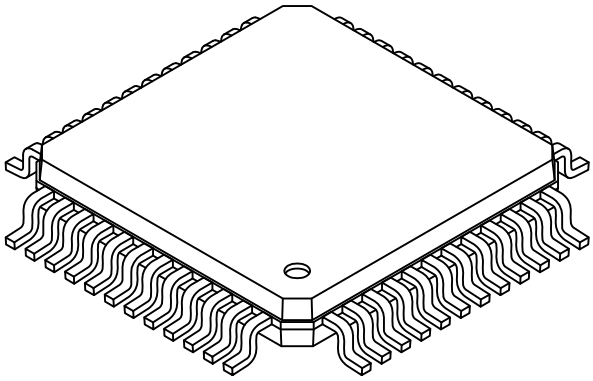

Units		MILLIMETERS		
Dimension Limits		MIN	NOM	MAX
Number of Leads	N	48		
Lead Pitch	e	0.50 BSC		
Overall Height	A	-	-	1.20
Standoff	A1	0.05	-	0.15
Molded Package Thickness	A2	0.95	1.00	1.05
Foot Length	L	0.45	0.60	0.75
Footprint	L1	1.00 REF		
Foot Angle	ϕ	0°	3.5°	7°
Overall Width	E	9.00 BSC		
Overall Length	D	9.00 BSC		
Molded Package Width	E1	7.00 BSC		
Molded Package Length	D1	7.00 BSC		
Lead Thickness	c	0.09	-	0.16
Lead Width	b	0.17	0.22	0.27
Mold Draft Angle Top	α	11°	12°	13°
Mold Draft Angle Bottom	β	11°	12°	13°

Notes:

1. Pin 1 visual index feature may vary, but must be located within the hatched area.
2. Chamfers at corners are optional; size may vary.
3. Dimensions D1 and E1 do not include mold flash or protrusions. Mold flash or protrusions shall not exceed 0.25mm per side.
4. Dimensioning and tolerancing per ASME Y14.5M
   BSC: Basic Dimension. Theoretically exact value shown without tolerances.
   REF: Reference Dimension, usually without tolerance, for information purposes only.
5. Datums A-B and D to be determined at center line between leads where leads exit plastic body at datum plane H

Microchip Technology Drawing C04-300-PT Rev A Sheet 2 of 2

48-Lead Thin Quad Flatpack (PT) - 7x7x1.0 mm Body [TQFP]

Note: For the most current package drawings, please see the Microchip Packaging Specification located at http://www.microchip.com/packaging

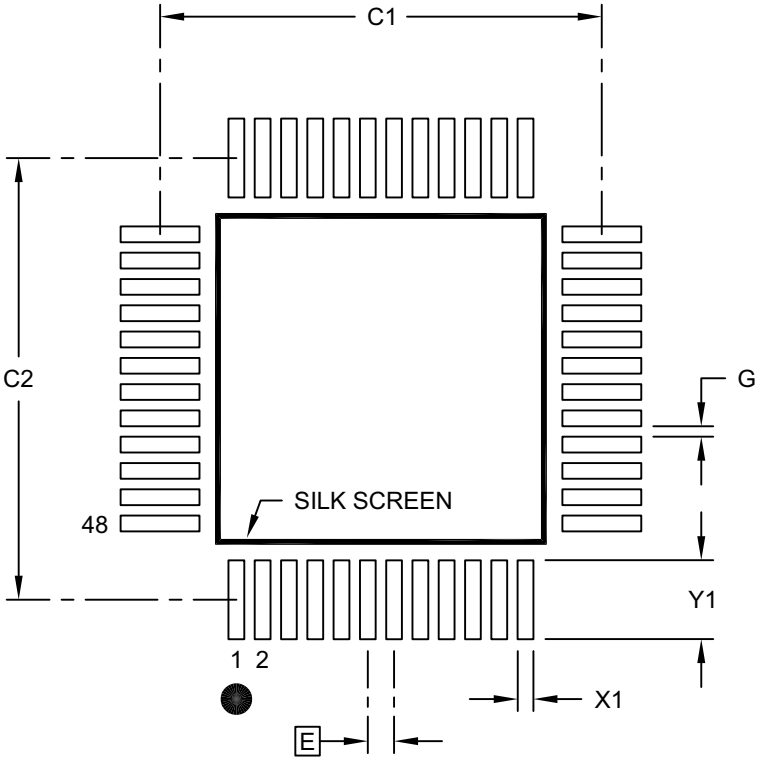

RECOMMENDED LAND PATTERN

Units		MILLIMETERS		
Dimension Limits		MIN	NOM	MAX
Contact Pitch	E		0.50 BSC	
Contact Pad Spacing	C1		8.40	
Contact Pad Spacing	C2		8.40	
Contact Pad Width (X48)	X1			0.30
Contact Pad Length (X48)	Y1			1.50
Distance Between Pads	G	0.20		

Notes:

1. Dimensioning and tolerancing per ASME Y14.5M
   BSC: Basic Dimension. Theoretically exact value shown without tolerances.
2. For best soldering results, thermal vias, if used, should be filled or tented to avoid solder loss during reflow process

Microchip Technology Drawing C04-2300-PT Rev A

© 2018-2019 Microchip Technology Inc.

48-Lead Ultra Thin Plastic Quad Flat, No Lead Package (M4) - 6x6 mm Body [UQFN] With Corner Anchors and 4.6x4.6 mm Exposed Pad

Note: For the most current package drawings, please see the Microchip Packaging Specification located at http://www.microchip.com/packaging

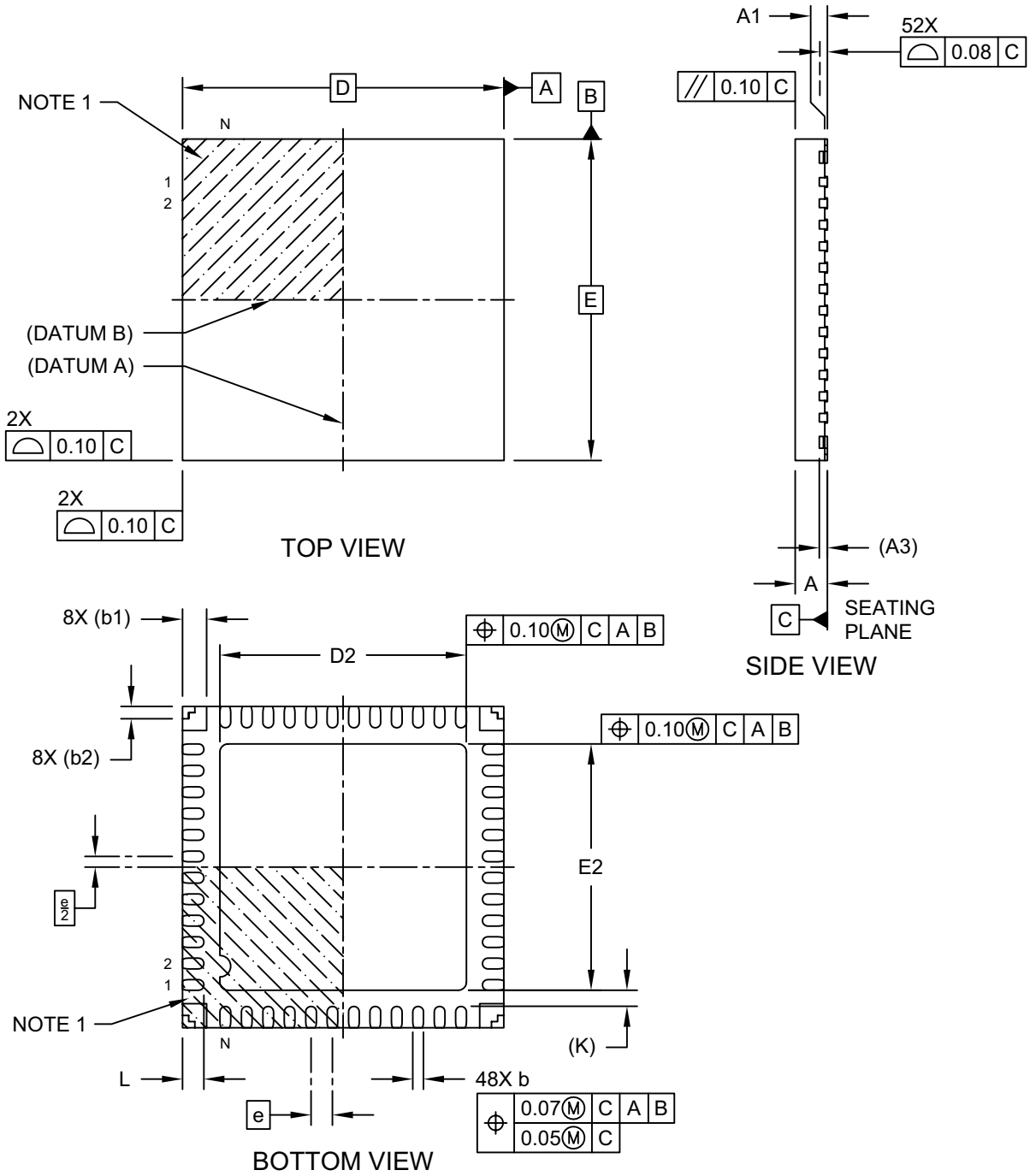

Microchip Technology Drawing C04-442A-M4 Sheet 1 of 2

48-Lead Ultra Thin Plastic Quad Flat, No Lead Package (M4) - 6x6 mm Body [UQFN] With Corner Anchors and 4.6x4.6 mm Exposed Pad

Note: For the most current package drawings, please see the Microchip Packaging Specification located at http://www.microchip.com/packaging

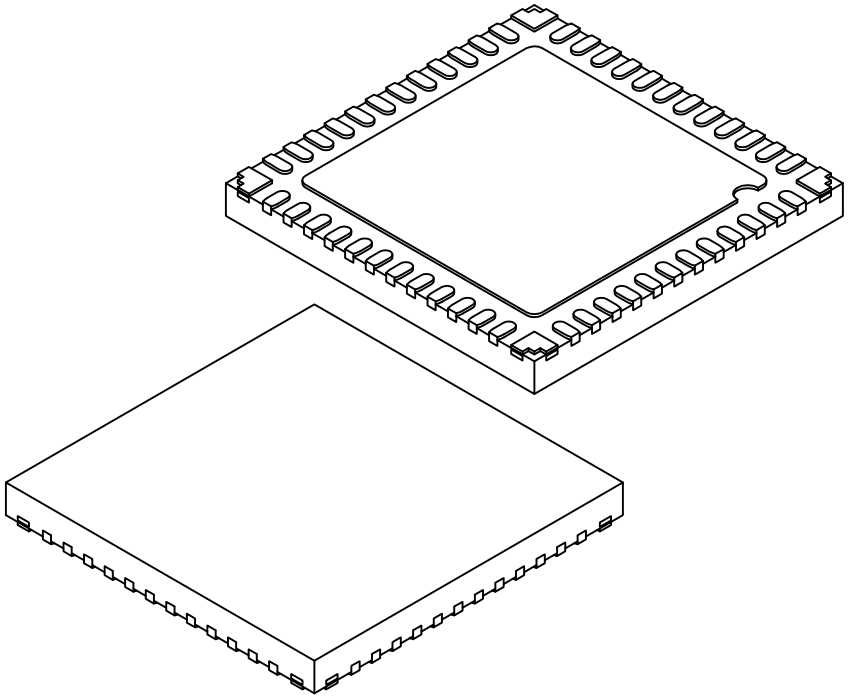

Units		MILLIMETERS		
Dimension Limits		MIN	NOM	MAX
Number of Terminals	N	48		
Pitch	e	0.40 BSC		
Overall Height	A	0.50	0.55	0.60
Standoff	A1	0.00	0.02	0.05
Terminal Thickness	A3	0.15 REF		
Overall Length	D	6.00 BSC		
Exposed Pad Length	D2	4.50	4.60	4.70
Overall Width	E	6.00 BSC		
Exposed Pad Width	E2	4.50	4.60	4.70
Terminal Width	b	0.15	0.20	0.25
Corner Anchor Pad	b1	0.45 REF		
Corner Anchor Pad, Metal-free Zone	b2	0.23 REF		
Terminal Length	L	0.35	0.40	0.45
Terminal-to-Exposed-Pad	K	0.30 REF		

Notes:

1. Pin 1 visual index feature may vary, but must be located within the hatched area.
2. Package is saw singulated
3. Dimensioning and tolerancing per ASME Y14.5M

   BSC: Basic Dimension. Theoretically exact value shown without tolerances.

   REF: Reference Dimension, usually without tolerance, for information purposes only.

Microchip Technology Drawing C04-442A-M4 Sheet 2 of 2

© 2018-2019 Microchip Technology Inc.

48-Lead Ultra Thin Plastic Quad Flat, No Lead Package (M4) - 6x6 mm Body [UQFN] With Corner Anchors and 4.6x4.6 mm Exposed Pad

Note: For the most current package drawings, please see the Microchip Packaging Specification located at http://www.microchip.com/packaging

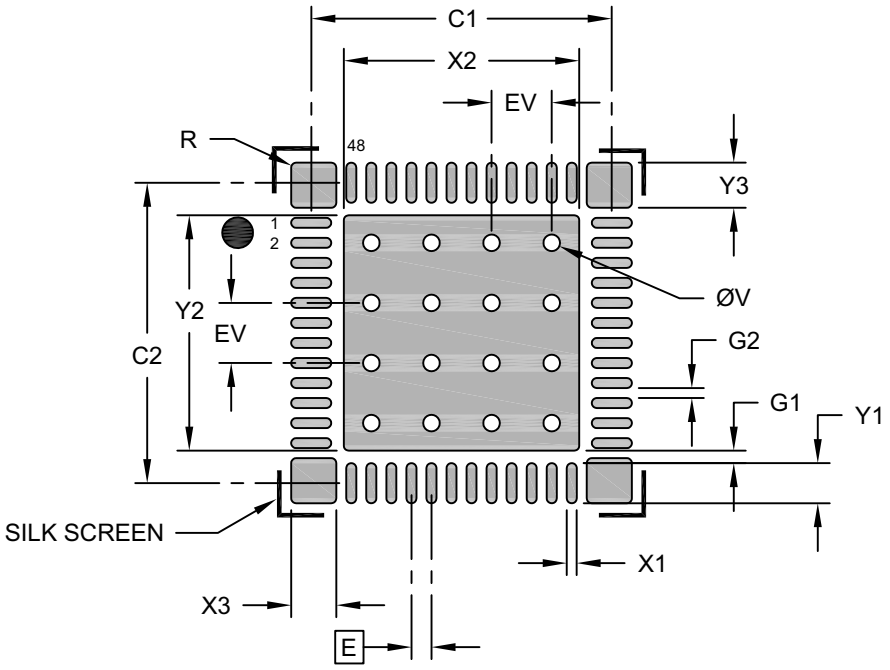

RECOMMENDED LAND PATTERN

Units		MILLIMETERS		
Dimension Limits		MIN	NOM	MAX
Contact Pitch	E		0.40 BSC	
Center Pad Width	X2			4.70
Center Pad Length	Y2			4.70
Contact Pad Spacing	C1		6.00	
Contact Pad Spacing	C2		6.00	
Contact Pad Width (X48)	X1			0.20
Contact Pad Length (X48)	Y1			0.80
Corner Anchor Pad Width (X4)	X3			0.90
Corner Anchor Pad Length (X4)	Y3			0.90
Pad Corner Radius (X 20)	R			0.10
Contact Pad to Center Pad (X48)	G1	0.25		
Contact Pad to Contact Pad	G2	0.20		
Thermal Via Diameter	V		0.33	
Thermal Via Pitch	EV		1.20	

Notes:

1. Dimensioning and tolerancing per ASME Y14.5M
   BSC: Basic Dimension. Theoretically exact value shown without tolerances.
2. For best soldering results, thermal vias, if used, should be filled or tented to avoid solder loss during reflow process

Microchip Technology Drawing C04-2442A-M4

NOTES:

© 2018-2019 Microchip Technology Inc.

APPENDIX A: REVISION HISTORY

Revision A (May 2018)

This is the initial version of the document.

Revision B (January 2019)

This revision incorporates the following updates:

- Sections:
  - Updated **"Microcontroller Features"**, **"Qualification and Class B Support"**, **Section 8.5.6 "Output Mapping"**, **Section 5.0 "Flash Program Memory"**, **Section 5.2 "RTSP Operation"** and **Section 31.0 "Electrical Characteristics"**.
  - Removed **Section 5.3.1 "Programming Algorithm for Flash Program Memory"**.
  - Replaced **Section 8.5.3 "Controlling Peripheral Pin Select"** with **Section 8.5.3 "Controlling Configuration Changes"**.
  - Added **Section 11.3 "PWM4H Output on PPS"** and **Section 12.2 "Temperature Sensor"**.
- Tables:
  - Updated Table 5, Table 1-1, Table 4-9, Table 4-11, Table 7-3, Table 8-4, Table 8-5, Table 8-6, Table 8-13, Table 10-1, Table 22-1, Table 28-2, Table 31-3, Table 31-15, Table 31-17, Table 31-19, Table 31-20, Table 31-21, Table 31-22, Table 31-23, Table 31-24, Table 31-26, Table 31-27, Table 31-28, Table 31-29, Table 31-30, Table 31-32, Table 31-34, Table 31-35, Table 31-36 and Table 31-37.
  - Added Table 31-10, Table 31-11, Table 31-12, Table 31-13 and Table 31-14.
- Figures:
  - Updated Figure 1-1, Figure 4-5, Figure 8-2, Figure 8-3 and Figure 31-3.
- Registers:
  - Updated Register 4-1, Register 5-1, Register 8-63, Register 8-64, Register 8-65 (was Register 8-67), Register 8-66 (was Register 8-68), Register 8-67 (was Register 8-69), Register 9-4, Register 11-1, Register 11-2, Register 11-21, Register 12-3, Register 12-6, Register 12-12, Register 15-3, Register 17-1, Register 17-2, Register 17-3, Register 18-2, Register 25-5, Register 25-6, Register 25-7, Register 25-8, Register 25-9, Register 25-10, Register 25-11, Register 28-1, Register 28-2, Register 28-3, Register 28-4, Register 28-5, Register 28-6, Register 28-7, Register 28-8, Register 28-9, Register 28-10, Register 28-11, Register 28-12, Register 28-13, Register 28-14, Register 28-15, Register 28-16 and Register 28-17.
  - Deleted Register 8-65 and Register 8-66.
- Packaging Information:
  - Added 28-Lead UQFN (M6) packaging diagram to **Section 32.0 "Packaging Information"**.

NOTES:

© 2018-2019 Microchip Technology Inc.

INDEX

A

Absolute Maximum Ratings 465
AC Characteristics 476
    Analog-to-Digital Conversion Requirements 491
Alternate Interrupt Vector Table 83
Analog-to-Digital Converter. *See* ADC.
Arithmetic Logic Unit (ALU) 32
Assembler
    MPASM Assembler 462

B

BIST
    At Run Time 39
    At Start-up 39
Bit-Reversed Addressing 58
    Example 59
    Implementation 58
    Sequence Table (16-Entry) 59
Block Diagrams
    16-Bit Timer1 Module 345
    32-Bit Timer Mode 352
    ADC Module 224
    ADC Shared Core 225
    Addressing for Table Registers 63
    APLL and VCO Detail 160
    `CALL` Stack Frame 54
    CLCx Input Source Selection 367
    CLCx Logic Function Combinatorial Options 366
    CLCx Module 365
    Conceptual SCCPx Modules 349
    Constant-Current Source 393
    CPU Core 24
    CRC Module 409
    Data Access from Program Space
        Address Generation 60
    Deadman Timer Module 401
    Dedicated ADC Core 225
    dsPIC33CK64MP105 Core Clock Sources 155
    dsPIC33CK64MP105 Core Oscillator Subsystem 156
    dsPIC33CK64MP105 Family 13
    Dual 16-Bit Timer Mode 352
    Functional Direct Memory Access (DMA) 180
    High-Speed Analog Comparator 254
    I2Cx Module 326
    Input Capture x Module 354
    Interleaved PFC 20
    Internal Regulator 442
    Master Reset System 77
    $\overline{\text{MCLR}}$ Pin Connections 18
    Multiplexing Remappable Outputs for RPn 117
    Off-Line UPS 22
    Output Compare x Module 353
    Phase-Shifted Full-Bridge Converter 21
    PLL and VCO 157
    Programmer's Model 26
    PSV Read Address Generation 51
    PTG Module 378
    PWM High-Level Module 190
    QEI Module 267
    Recommended Minimum Connection 18
    Reference Clock Generator 164
    Remappable Input for U1RX 112
    Security Segments 449
    SENTx Module 336
    Shared Port Structure 103
    Simplified UARTx 286
    Single Operational Amplifier 397
    SPIx Master, Frame Master Connection 323
    SPIx Master, Frame Slave Connection 324
    SPIx Master/Slave Connection
        (Enhanced Buffer Modes) 323
    SPIx Master/Slave Connection (Standard Mode) 322
    SPIx Module (Enhanced Mode) 310
    SPIx Module (Standard Mode) 309
    SPIx Slave, Frame Master Connection 324
    SPIx Slave, Frame Slave Connection 324
    Suggested Oscillator Circuit Placement 19
    Timer Clock Generator 350
    Watchdog Timer (WDT) 445
Brown-out Reset (BOR) 425, 444
Built-In Self-Test. *See* BIST.

C

C Compilers
    MPLAB XC Compilers 462
Capture/Compare/PWM/Timer
    Auto-Shutdown and Gating Sources 360
    Auxiliary Output 355
    Control/Status Registers 356
    General Purpose Timer 351
    Input Capture Mode 354
    Output Compare Mode 353
    Synchronization Sources 359
    Time Base Generator 350
Capture/Compare/PWM/Timer (SCCP/MCCP) 349
CLC
    Control Registers 368
Code Examples
    `PWRSAV` Instruction Syntax 413
    Using Auxiliary PLL with Internal FRC Oscillator 161
    Using PLL (50 MIPS) with POSC 159
    Using PLL with 8 MHz Internal FRC 159
Code Memory Map for dsPIC33CK32MP10X Devices 34
Code Memory Map for dsPIC33CK64MP10X Devices 34
Code Protection 425, 449
CodeGuard Security 425, 449
Comparator/DAC
    Control Registers 255
    Features Overview 255
Configurable Logic Cell (CLC) 365
Configurable Logic Cell. *See* CLC.
Configuration Bits 425
    Bit Values for Clock Selection 165
CPU 23
    Addressing Modes 23
    Control Registers 28
    Data Space Addressing 23
    Instruction Set 23
    Registers 23
    Resources 27
CRC
    Control Registers 410
Current Bias Generator
    Control Registers 394
Current Bias Generator (CBG) 393
Current Bias Generator. *See* CBG.

Customer Change Notification Service 524
Customer Notification Service 524
Customer Support 524
Cyclic Redundancy Check. *See* CRC.

D

Data Address Space 36
  Memory Map for dsPIC33CK64MPX0X and dsPIC33CK32MPX0X Devices 38
  Near Data Space 37
  Organization, Alignment 36
  SFR Space 37
  Width 36
  X and Y Data Spaces 39
Data Memory Test (BIST) 39
  Flowchart 39
Data Space
  Extended X 54
  Paged Data Memory Space (figure) 52
  Paged Memory Scheme 51
DC Characteristics
  Operating Conditions 466
Deadman Timer (DMT) 401
  Control/Status Registers 402
Deadman Timer. *See* DMT.
Demo/Development Boards, Evaluation and Starter Kits 464
Development Support 461
  Third-Party Tools 464
Device Identification 440
Device Overview 13
Direct Memory Access Controller. *See* DMA.
DMA
  Channel Trigger Sources 187
  Control Registers 183
  Peripheral Module Disable (PMD) 183
  Summary of Operations 181
  Types of Data Transfers 182
  Typical Setup 183
Doze Mode 415
DSP Engine 32
Dual Watchdog Timer (Dual WDT) 445

E

ECC
  Control Registers 72
Electrical Characteristics 465
  AC 476
  ADC Delta Current 471
  ADC Specifications 491
  APLL Delta Current 471
  Auxiliary PLL Clock Timing Specifications 479
  BFRC Oscillator Specifications 480
  Comparator + DAC Delta Current 472
  Current Bias Generator Specifications 494
  DAC Output (DACOUT Pin) Specifications 493
  DAC Specifications 493
  Doze Current (IDOZE) 469
  External Clock Timing Requirements 478
  FRC Oscillator Specifications 480
  High-Speed Analog Comparator Specifications 492
  High-Speed PWMx Timing Requirements 482
  I/O Pin Input Injection Current Specifications 474
  I/O Pin Input Specifications 473
  I/O Pin Output Specifications 474
  I/O Timing Requirements 477
  I2Cx Bus Data Requirements (Master Mode) 487
  I2Cx Bus Data Timing Requirements (Slave Mode) 489
  Idle Current (IIDLE) 468
  Load Conditions for I/O Specifications 476
  LPRC Oscillator Specifications 480
  Op Amp Delta Current 472
  Operating Current (IDD) 467
  Operating Voltage Specifications 466
  Operational Amplifier Specifications 494
  Package Thermal Resistance 466
  PLL Clock Timing Specifications 479
  Power-Down Current (IPD) 469
  Program Flash Memory Specifications 475
  PWM Delta Current 470
  Reset and Brown-out Reset Requirements 481
  SPIx Master Mode Requirements 484
  SPIx Slave Mode Timing Requirements 485
  Thermal Operating Conditions 466
  UARTx Timing Requirements 490
  Watchdog Timer Delta Current (ΔIWDT) 470
Equations
  AFPLLO Calculation 161
  AFVCO Calculation 161
  Calculating Frequency Output 164
  FPLLO Calculation 158
  Frame Time Calculations 337
  FVCO Calculation 158
  I^2C Baud Rate Reload Calculation 327
  Relationship Between Device and SPIx Clock Speed 324
  SYNCMINx and SYNCMAXx Calculations 338
  Tick Period Calculation 337
Errata 10
Error Correcting Code (ECC) 71
  Fault Injection 71

F

Flash Program Memory
  and Table Instructions 63
  Control Registers 65
  RTSP Operation 64
Flexible Configuration 425

G

Getting Started Guidelines 17
  Connection Requirements 17
  Decoupling Capacitors 17
  External Oscillator Pins 19
  ICSP Pins 19
  Master Clear ($\overline{MCLR}$) Pin 18
  Oscillator Value Conditions on Start-up 20
  Targeted Applications 20
  Unused I/Os 20

H

High-Resolution PWM (HSPWM) with Fine Edge Placement 189
High-Speed Analog Comparator with Slope Compensation DAC 253
High-Speed, 12-Bit Analog-to-Digital Converter (ADC) 223
  Control/Status Registers 227
  Features Overview 223
  Resources 226
  Temperature Sensor 226

© 2018-2019 Microchip Technology Inc.

HSPWM
Architecture ... 190
Control Registers ... 191
PWM4H Output on PPS ... 190
Write Restrictions ... 190

I

I/O Ports
Configuring Analog/Digital Port Pins ... 104
Control Registers ... 104
Helpful Tips ... 121
Parallel I/O (PIO) ... 101
Resources ... 122
Write/Read Timing ... 104
I^2C
Clock Rates ... 327
Communicating as Master in Single Master Environment ... 325
Control/Status Registers ... 329
Reserved Addresses ... 328
Setting Baud Rate as Bus Master ... 327
Slave Address Masking ... 327
ICSP Write Inhibit ... 75
Activation ... 75
In-Circuit Debugger ... 448
In-Circuit Emulation ... 425
In-Circuit Serial Programming (ICSP) ... 425, 448
Input Change Notification (ICN) ... 111
Instruction Addressing Modes ... 55
File Register Instructions ... 55
Fundamental Modes Supported ... 55
MAC Instructions ... 56
MCU Instructions ... 55
Move and Accumulator Instructions ... 56
Other Instructions ... 56
Instruction Set Summary ... 451
Overview ... 454
Symbols Used in Opcode Descriptions ... 452
Instruction-Based Power-Saving Modes ... 413
Idle ... 414
Sleep ... 414
Inter-Integrated Circuit. *See* I^2C.
Internet Address ... 524
Interrupt Controller
Alternate Interrupt Vector Table (AIVT) ... 81
Control and Status Registers ... 91
INTCON1 ... 91
INTCON2 ... 91
INTCON3 ... 91
INTCON4 ... 91
INTTREG ... 91
Interrupt Vector Details ... 85
Interrupt Vector Table (IVT) ... 81
Reset Sequence ... 81
Resources ... 91
Trap Vector Details ... 84
Interrupt Vector Table ... 82
Interrupts Coincident with Power Save Instructions ... 414

J

JTAG Boundary Scan Interface ... 425
JTAG Interface ... 448

L

Low-Power Sleep Modes (table) ... 414

M

Memory Organization ... 33
Resources ... 41
Microchip Internet Website ... 524
Modulo Addressing ... 57
Applicability ... 58
Operation Example ... 57
Start and End Address ... 57
W Address Register Selection ... 57
MPLAB Assembler, Linker, Librarian ... 462
MPLAB ICD 3 In-Circuit Debugger ... 463
MPLAB PM3 Device Programmer ... 463
MPLAB REAL ICE In-Circuit Emulator System ... 463
MPLAB X Integrated Development Environment Software ... 461
MPLAB X SIM Software Simulator ... 463
MPLIB Object Librarian ... 462
MPLINK Object Linker ... 462

O

Operational Amplifier ... 397
Control Registers ... 398
Oscillator
Auxiliary PLL ... 160
Backup Internal Fast RC (BFRC) ... 163
Configuration ... 165
Control Registers ... 166
CPU Clocking ... 162
Internal Fast RC (FRC) ... 163
Low-Power RC (LPRC) ... 163
OSCCON Unlock Sequence ... 165
Primary (POSC) ... 163
Primary PLL ... 157
Reference Clock Output ... 164
Oscillator with High-Frequency PLL ... 155

P

Packaging ... 495
Details ... 497
Marking ... 495
Peripheral Module Disable (PMD) ... 415
Control Registers ... 416
Peripheral Pin Select (PPS) ... 111
Available Peripherals ... 111
Available Pins ... 111
Configuration Change Control ... 112
Control Registers ... 125
Input Mapping ... 112
Output Mapping ... 117
Output Selection for Remappable Pins ... 119
Remappable Output Pin Registers ... 118
Remappable Pin Inputs ... 113
Selectable Input Sources ... 115
Peripheral Trigger Generator (PTG) ... 377
Peripheral Trigger Generator. *See* PTG.
PICkit 3 In-Circuit Debugger/Programmer ... 463
Pin and ANSELx Availability ... 102
Pinout I/O Descriptions (table) ... 14
Power-Saving Features ... 413
Clock Frequency and Switching ... 413
Resources ... 415
Program Address Space
Memory Map for dsPIC33CK32MP10X Devices ... 33

Program Memory
Address Space 33
Construction 60
Data Access from Program Memory Using Table Instructions 61
Table Read High Instructions (TBLRDH) 61
Table Read Low Instructions (TBLRDL) 61
Interfacing with Data Memory Spaces 60
Organization 35
Reset Vector 35
Programmer's Model 25
Register Descriptions 25
PTG
Command Options 389
Control/Status Registers 379
Features 377
Input Descriptions 391
Output Descriptions 391
Step Command Format/Description 388

Q

QEI
Control/Status Registers 268
Truth Table 266
Quadrature Encoder Interface (QEI) 265
Quadrature Encoder Interface. *See* QEI.

R

Referenced Sources 11
Register Maps
Configuration 426
Interrupt Enable 89
Interrupt Flag 89
Interrupt Priority 90
PMD 423
PORTA 123
PORTB 123
PORTC 124
PORTD 124
PPS Input Control 153
PPS Output Control 154
Registers
ACLKCON1 (Auxiliary Clock Control) 173
ADCMPxCON (ADC Digital Comparator x Control) 248
ADCMPxENH (ADC Digital Comparator x Channel Enable High) 249
ADCMPxENL (ADC Digital Comparator x Channel Enable Low) 249
ADCON1H (ADC Control 1 High) 228
ADCON1L (ADC Control 1 Low) 227
ADCON2H (ADC Control 2 High) 230
ADCON2L (ADC Control 2 Low) 229
ADCON3H (ADC Control 3 High) 232
ADCON3L (ADC Control 3 Low) 231
ADCON4H (ADC Control 4 High) 234
ADCON4L (ADC Control 4 Low) 233
ADCON5H (ADC Control 5 High) 236
ADCON5L (ADC Control 5 Low) 235
ADCORExH (Dedicated ADC Core x Control High) 238
ADCORExL (Dedicated ADC Core x Control Low) 237
ADEIEH (ADC Early Interrupt Enable High) 240
ADEIEL (ADC Early Interrupt Enable Low) 240
ADEISTATH (ADC Early Interrupt Status High) 241
ADEISTATL (ADC Early Interrupt Status Low) 241
ADFLxCON (ADC Digital Filter x Control) 250
ADIEH (ADC Interrupt Enable High) 244
ADIEL (ADC Interrupt Enable Low) 244
ADLVLTRGH (ADC Level-Sensitive Trigger Control High) 239
ADLVLTRGL (ADC Level-Sensitive Trigger Control Low) 239
ADMOD0H (ADC Input Mode Control 0 High) 242
ADMOD0L (ADC Input Mode Control 0 Low) 242
ADMOD1L (ADC Input Mode Control 1 Low) 243
ADSTATH (ADC Data Ready Status High) 245
ADSTATL (ADC Data Ready Status Low) 245
ADTRIGnL/ADTRIGxH (ADC Channel Trigger n(x) Selection Low/High) 246
AMPCON1H (Op Amp Control High) 399
AMPCON1L (Op Amp Control Low) 398
ANSELx (Analog Select for PORTx) 104
APLLDIV1 (APLL Output Divider) 175
APLLFBD1 (APLL Feedback Divider) 174
BIASCON (Current Bias Generator Control) 394
CCPxCON1H (CCPx Control 1 High) 358
CCPxCON1L (CCPx Control 1 Low) 356
CCPxCON2H (CCPx Control 2 High) 361
CCPxCON2L (CCPx Control 2 Low) 360
CCPxCON3H (CCPx Control 3 High) 363
CCPxCON3L (CCPx Control 3 Low) 362
CCPxSTATL (CCPx Status) 364
CLCxCONH (CLCx Control High) 369
CLCxCONL (CLCx Control Low) 368
CLCxGLSH (CLCx Gate Logic Input Select High) 374
CLCxGLSL (CLCx Gate Logic Input Select Low) 372
CLCxSEL (CLCx Input MUX Select) 370
CLKDIV (Clock Divider) 168
CMBTRIGH (Combinational Trigger High) 196
CMBTRIGL (Combinational Trigger Low) 195
CNCONx (Change Notification Control for PORTx) 108
CNEN0x (Interrupt Change Notification Enable for PORTx) 108
CNEN1x (Interrupt Change Notification Edge Select for PORTx) 109
CNFx (Interrupt Change Notification Flag for PORTx) 110
CNPDx (Change Notification Pull-Down Enable for PORTx) 107
CNPUx (Change Notification Pull-up Enable for PORTx) 107
CNSTATx (Interrupt Change Notification Status for PORTx) 109
CORCON (Core Control) 30, 93
CRCCONH (CRC Control High) 411
CRCCONL (CRC Control Low) 410
CRCXORH (CRC XOR Polynomial, High Byte) 412
CRCXORL (CRC XOR Polynomial, Low Byte) 412
CTXTSTAT (CPU W Register Context Status) 31
DACCTRL1L (DAC Control 1 Low) 256
DACCTRL2H (DAC Control 2 High) 257
DACCTRL2L (DAC Control 2 Low) 257
DACxCONH (DACx Control High) 258
DACxCONL (DACx Control Low) 258
DACxDATH (DACx Data High) 260
DACxDATL (DACx Data Low) 260
DEVID (Device ID) 441
DEVREV (Device Revision) 440

© 2018-2019 Microchip Technology Inc.

DMACHn (DMA Channel n Control) 185
DMACON (DMA Engine Control)..... 184
DMAINTn (DMA Channel n Interrupt)..... 186
DMTCLR (Deadman Timer Clear) 403
DMTCNTH (Deadman Timer Count High)..... 405
DMTCNTL (Deadman Timer Count Low) 405
DMTCON (Deadman Timer Control) 402
DMTHOLDREG (DMT Hold)..... 408
DMTPRECLR (Deadman Timer Preclear)..... 402
DMTPSCNTH (DMT Post-Configure Count Status High) 406
DMTPSCNTL (DMT Post-Configure Count Status Low)..... 406
DMTPSINTVH (DMT Post-Configure Interval Status High) 407
DMTPSINTVL (DMT Post-Configure Interval Status Low)..... 407
DMTSTAT (Deadman Timer Status)..... 404
ECCADDRH (ECC Fault Inject Address Compare High) 73
ECCADDRL (ECC Fault Inject Address Compare Low) 73
ECCCONH (ECC Fault Injection Configuration High)..... 72
ECCCONL (ECC Fault Injection Configuration Low)..... 72
ECCSTATH (ECC System Status Display High) 74
ECCSTATL (ECC System Status Display Low)..... 74
FALTREG Configuration 438
FBSLIM Configuration..... 428
FDEVOPT Configuration..... 437
FDMT Configuration..... 436
FDMTCNTH Configuration..... 435
FDMTCNTL Configuration 435
FDMTIVTH Configuration 434
FDMTIVTL Configuration 434
FICD Configuration 433
FOSC Configuration..... 430
FOSCSEL Configuration..... 429
FPOR Configuration..... 432
FSCL (Frequency Scale) 192
FSEC Configuration 427
FSIGN Configuration..... 428
FSMINPER (Frequency Scaling Minimum Period)..... 192
FWDT Configuration 431
I2CxCONH (I2Cx Control High) 331
I2CxCONL (I2Cx Control Low)..... 329
I2CxMSK (I2Cx Slave Mode Address Mask) 333
I2CxSTAT (I2Cx Status) 332
IBIASCONH (Current Bias Generator Current Source Control High) 395
IBIASCONL (Current Bias Generator Current Source Control Low) 396
INDXxCNTH (Index x Counter High) 280
INDXxCNTL (Index x Counter Low)..... 280
INDXxHLD (Index x Counter Hold) 281
INTCON1 (Interrupt Control 1)..... 94
INTCON2 (Interrupt Control 2)..... 96
INTCON3 (Interrupt Control 3)..... 97
INTCON4 (Interrupt Control 4)..... 98
INTTREG (Interrupt Control and Status)..... 99
INTxTMRH (Interval x Timer High) 278
INTxTMRL (Interval x Timer Low)..... 278
INTXxHLDH (Interval x Timer Hold High) 279
INTXxHLDL (Interval x Timer Hold Low) 279
LATx (Output Data for PORTx) 106
LFSR (Linear Feedback Shift)..... 201
LOGCONy (Combinatorial PWM Logic Control y)..... 197
MBISTCON (MBIST Control)..... 40
MDC (Master Duty Cycle)..... 193
MPER (Master Period) 194
MPHASE (Master Phase)..... 193
NVMADR (Nonvolatile Memory Lower Address)..... 68
NVMADRU (Nonvolatile Memory Upper Address) 68
NVMCON (Nonvolatile Memory (NVM) Control) 66
NVMKEY (Nonvolatile Memory Key)..... 69
NVMSRCADRH (NVM Source Data Address High)..... 70
NVMSRCADRL (NVM Source Data Address Low)..... 70
ODCx (Open-Drain Enable for PORTx)..... 106
OSCCON (Oscillator Control)..... 166
OSCTUN (FRC Oscillator Tuning)..... 171
PCLKCON (PWM Clock Control) 191
PGxCAP (PWM Generator x Capture) 221
PGxCONH (PWM Generator x Control High)..... 203
PGxCONL (PWM Generator x Control Low) 202
PGxDC (PWM Generator x Duty Cycle)..... 217
PGxDCA (PWM Generator x Duty Cycle Adjustment)..... 218
PGxDTH (PWM Generator x Dead-Time High)..... 220
PGxDTL (PWM Generator x Dead-Time Low) 220
PGxEVTH (PWM Generator x Event High) 210
PGxEVTL (PWM Generator x Event Low)..... 209
PGxIOCONH (PWM Generator x I/O Control High)..... 208
PGxIOCONL (PWM Generator x I/O Control Low) 207
PGxLEBH (PWM Generator x Leading-Edge Blanking High) 216
PGxLEBL (PWM Generator x Leading-Edge Blanking Low)..... 215
PGxPER (PWM Generator x Period)..... 218
PGxPHASE (PWM Generator x Phase) 217
PGxSTAT (PWM Generator x Status) 205
PGxTRIGA (PWM Generator x Trigger A)..... 219
PGxTRIGB (PWM Generator x Trigger B)..... 219
PGxTRIGC (PWM Generator x Trigger C) 219
PGxyPCIH (PWM Generator xy PCI High)..... 213
PGxyPCIL (PWM Generator xy PCI Low) 211
PLLDIV (PLL Output Divider) 172
PLLFBD (PLL Feedback Divider) 170
PMD1 (PMD1 Control)..... 416
PMD2 (PMD2 Control)..... 417
PMD3 (PMD3 Control)..... 418
PMD4 (PMD4 Control)..... 419
PMD6 (PMD6 Control)..... 420
PMD7 (PMD7 Control)..... 421
PMD8 (PMD8 Control)..... 422
PORTx (Input Data for PORTx)..... 105
POSxCNTH (Position x Counter High) 274
POSxCNTL (Position x Counter Low) 274
POSxHLD (Position x Counter Hold)..... 275
PTGADJ (PTG Adjust)..... 386
PTGBTE (PTG Broadcast Trigger Enable Low)..... 382
PTGBTEH (PTG Broadcast Trigger Enable High).... 382
PTGC0LIM (PTG Counter 0 Limit) 385
PTGC1LIM (PTG Counter 1 Limit) 385

PTGCON (PTG Control/Status High) 381
PTGCST (PTG Control/Status Low) 379
PTGHOLD (PTG Hold) 383
PTGL0 (PTG Literal 0) 386
PTGQPTR (PTG Step Queue Pointer) 387
PTGQUEn (PTG Step Queue n Pointer) 387
PTGSDLIM (PTG Step Delay Limit) 384
PTGT0LIM (PTG Timer0 Limit) 383
PTGT1LIM (PTG Timer1 Limit) 384
PWMEVTy (PWM Event Output Control y) 199
QEIxCON (QEIx Control) 268
QEIxGECH (QEIx Greater Than or Equal Compare High) 284
QEIxGECL (QEIx Greater Than or Equal Compare Low) 284
QEIxICH (QEIx Initialization/Capture High) 282
QEIxICL (QEIx Initialization/Capture Low) 282
QEIxIOC (QEIx I/O Control) 270
QEIxIOCH (QEIx I/O Control High) 271
QEIxLECH (QEIx Less Than or Equal Compare High) 283
QEIxLECL (QEIx Less Than or Equal Compare Low) 283
QEIxSTAT (QEIx Status) 272
RCON (Reset Control) 79
REFOCONH (Reference Clock Control High) 177
REFOCONL (Reference Clock Control Low) 176
REFOTRIM (Reference Oscillator Trim) 177
RPCON (Peripheral Remapping Configuration) 125
RPINR0 (Peripheral Pin Select Input 0) 125
RPINR1 (Peripheral Pin Select Input 1) 126
RPINR11 (Peripheral Pin Select Input 11) 129
RPINR12 (Peripheral Pin Select Input 12) 130
RPINR13 (Peripheral Pin Select Input 13) 130
RPINR14 (Peripheral Pin Select Input 14) 131
RPINR15 (Peripheral Pin Select Input 15) 131
RPINR16 (Peripheral Pin Select Input 16) 132
RPINR17 (Peripheral Pin Select Input 17) 132
RPINR18 (Peripheral Pin Select Input 18) 133
RPINR19 (Peripheral Pin Select Input 19) 133
RPINR2 (Peripheral Pin Select Input 2) 126
RPINR20 (Peripheral Pin Select Input 20) 134
RPINR21 (Peripheral Pin Select Input 21) 134
RPINR22 (Peripheral Pin Select Input 22) 135
RPINR23 (Peripheral Pin Select Input 23) 135
RPINR27 (Peripheral Pin Select Input 27) 136
RPINR29 (Peripheral Pin Select Input 29) 136
RPINR3 (Peripheral Pin Select Input 3) 127
RPINR30 (Peripheral Pin Select Input 30) 137
RPINR37 (Peripheral Pin Select Input 37) 137
RPINR38 (Peripheral Pin Select Input 38) 138
RPINR4 (Peripheral Pin Select Input 4) 127
RPINR42 (Peripheral Pin Select Input 42) 138
RPINR43 (Peripheral Pin Select Input 43) 139
RPINR44 (Peripheral Pin Select Input 44) 139
RPINR45 (Peripheral Pin Select Input 45) 140
RPINR46 (Peripheral Pin Select Input 46) 140
RPINR47 (Peripheral Pin Select Input 47) 141
RPINR48 (Peripheral Pin Select Input 48) 141
RPINR49 (Peripheral Pin Select Input 49) 142
RPINR5 (Peripheral Pin Select Input 5) 128
RPINR6 (Peripheral Pin Select Input 6) 128
RPINR7 (Peripheral Pin Select Input 7) 129
RPOR0 (Peripheral Pin Select Output 0) 143
RPOR1 (Peripheral Pin Select Output 1) 143
RPOR10 (Peripheral Pin Select Output 10) 148
RPOR11 (Peripheral Pin Select Output 11) 148
RPOR12 (Peripheral Pin Select Output 12) 149
RPOR13 (Peripheral Pin Select Output 13) 149
RPOR14 (Peripheral Pin Select Output 14) 150
RPOR15 (Peripheral Pin Select Output 15) 150
RPOR16 (Peripheral Pin Select Output 16) 151
RPOR17 (Peripheral Pin Select Output 17) 151
RPOR18 (Peripheral Pin Select Output 18) 152
RPOR19 (Peripheral Pin Select Output 19) 152
RPOR2 (Peripheral Pin Select Output 2) 144
RPOR3 (Peripheral Pin Select Output 3) 144
RPOR4 (Peripheral Pin Select Output 4) 145
RPOR5 (Peripheral Pin Select Output 5) 145
RPOR6 (Peripheral Pin Select Output 6) 146
RPOR7 (Peripheral Pin Select Output 7) 146
RPOR8 (Peripheral Pin Select Output 8) 147
RPOR9 (Peripheral Pin Select Output 9) 147
SENTxCON1 (SENTx Control 1) 339
SENTxDATH (SENTx Receive Data High) 343
SENTxDATL (SENTx Receive Data Low) 343
SENTxSTAT (SENTx Status) 341
SLPxCONH (DACx Slope Control High) 261
SLPxCONL (DACx Slope Control Low) 262
SLPxDAT (DACx Slope Data) 263
SPIxCON1H (SPIx Control 1 High) 314
SPIxCON1L (SPIx Control 1 Low) 312
SPIxCON2L (SPIx Control 2 Low) 316
SPIxIMSKH (SPIx Interrupt Mask High) 321
SPIxIMSKL (SPIx Interrupt Mask Low) 320
SPIxSTATH (SPIx Status High) 319
SPIxSTATL (SPIx Status Low) 317
SR (CPU STATUS) 28, 92
T1CON (Timer1 Control) 346
TRISx (Output Enable for PORTx) 105
UxBRG (UARTx Baud Rate) 296
UxBRGH (UARTx Baud Rate High) 296
UxINT (UARTx Interrupt) 305
UxMODE (UARTx Configuration) 288
UxMODEH (UARTx Configuration High) 290
UxP1 (UARTx Timing Parameter 1) 298
UxP2 (UARTx Timing Parameter 2) 299
UxP3 (UARTx Timing Parameter 3) 300
UxP3H (UARTx Timing Parameter 3 High) 300
UxRXCHK (UARTx Receive Checksum) 302
UxRXREG (UARTx Receive Buffer) 297
UxSCCON (UARTx Smart Card Configuration) 303
UxSCINT (UARTx Smart Card Interrupt) 304
UxSTA (UARTx Status) 292
UxSTAH (UARTx Status High) 294
UxTXCHK (UARTx Transmit Checksum) 301
UxTXREG (UARTx Transmit Buffer) 297
VELxCNT (Velocity x Counter) 276
VELxCNTH (Velocity x Counter High) 276
VELxHLD (Velocity x Counter Hold) 277
VREGCON (Voltage Regulator Control) 443
WDTCONH (Watchdog Timer Control High) 447
WDTCONL (Watchdog Timer Control Low) 446

© 2018-2019 Microchip Technology Inc.

Resets 77
Brown-out Reset (BOR) 77
Configuration Mismatch Reset (CM) 77
Illegal Condition Reset (IOPUWR) 77
Illegal Opcode 77
Security 77
Uninitialized W Register 77
Master Clear (MCLR) Pin Reset 77
Power-on Reset (POR) 77
RESET Instruction (SWR) 77
Resources 78
Trap Conflict Reset (TRAPR) 77
Watchdog Timer Time-out Reset (WDTO) 77
Revision History 515

S

SENTx Protocol Data Frames 336
Serial Peripheral Interface (SPI) 307
Serial Peripheral Interface. *See* SPI.
SFR Blocks
000h 41
100h 42
200h 43
300h-400h 44
800h 45
900h 46
A00h 47
B00h 47
C00h 48
D00h 49
E00h 49
F00h 50
Single-Edge Nibble Transmission (SENT) 335
Control/Status Registers 339
Receive Mode 338
Configuration 338
Transmit Mode 337
Configuration 337
Single-Edge Nibble Transmission for Automotive Applications 335
Single-Edge Nibble Transmission. *See* SENT.
Special Features of the CPU 425
SPI
Control/Status Registers 312

T

Timer1 345
Control Register 346
Timing Diagrams
BOR and Master Clear Reset Characteristics 481
Clock/Instruction Cycle 162
External Clock 478
High-Speed PWMx Characteristics 482
I/O Characteristics 477
I2Cx Bus Data (Master Mode) 486
I2Cx Bus Data (Slave Mode) 488
I2Cx Bus Start/Stop Bits (Master Mode) 486
I2Cx Bus Start/Stop Bits (Slave Mode) 488
QEI Interface Signals 265
SPIx Master Mode (CKE = 0) Characteristics 483
SPIx Master Mode (CKE = 1) Characteristics 483
SPIx Slave Mode (CKE = 0) Characteristics 484
SPIx Slave Mode (CKE = 1) Characteristics 485
UARTx Characteristics 490

U

UART
Architectural Overview 286
Character Frame 287
Control/Status Registers 288
Data Buffers 287
Protocol Extensions 287
Unique Device Identifier (UDID) 36
Unique Device Identifier. *See* UDID.
Universal Asynchronous Receiver Transmitter (UART) 285
Universal Asynchronous Receiver Transmitter. *See* UART.
User OTP Memory 442

V

Voltage Regulator (On-Chip) 442

W

Watchdog Timer (WDT) 425
WWW Address 524
WWW, On-Line Support 10

NOTES:

© 2018-2019 Microchip Technology Inc.

THE MICROCHIP WEBSITE

Microchip provides online support via our WWW site at www.microchip.com. This website is used as a means to make files and information easily available to customers. Accessible by using your favorite Internet browser, the website contains the following information:

- **Product Support** – Data sheets and errata, application notes and sample programs, design resources, user's guides and hardware support documents, latest software releases and archived software
- **General Technical Support** – Frequently Asked Questions (FAQ), technical support requests, online discussion groups, Microchip consultant program member listing
- **Business of Microchip** – Product selector and ordering guides, latest Microchip press releases, listing of seminars and events, listings of Microchip sales offices, distributors and factory representatives

CUSTOMER CHANGE NOTIFICATION SERVICE

Microchip's customer notification service helps keep customers current on Microchip products. Subscribers will receive e-mail notification whenever there are changes, updates, revisions or errata related to a specified product family or development tool of interest.

To register, access the Microchip website at www.microchip.com. Under "Support", click on "Customer Change Notification" and follow the registration instructions.

CUSTOMER SUPPORT

Users of Microchip products can receive assistance through several channels:

- Distributor or Representative
- Local Sales Office
- Field Application Engineer (FAE)
- Technical Support

Customers should contact their distributor, representative or Field Application Engineer (FAE) for support. Local sales offices are also available to help customers. A listing of sales offices and locations is included in the back of this document.

Technical support is available through the website at: http://microchip.com/support

NOTES:

© 2018-2019 Microchip Technology Inc.

PRODUCT IDENTIFICATION SYSTEM

To order or obtain information, e.g., on pricing or delivery, refer to the factory or the listed sales office.

dsPIC 33 CK 64 MP 105 T I / PT - XXX

- **Microchip Trademark**
- **Architecture**
- **Flash Memory Family**
- **Program Memory Size (Kbyte)**
- **Product Group**
- **Pin Count**
- **Tape and Reel Flag (if applicable)**
- **Temperature Range**
- **Package**
- **Pattern**

Architecture:	33	=	16-Bit Digital Signal Controller
Product Group:	MP	=	Motor Control/Power Supply
Pin Count:	02	=	28-pin
	03	=	36-pin
	05	=	48-pin
Temperature Range:	I	=	-40°C to +85°C (Industrial)
	E	=	-40°C to +125°C (Extended)
Package:	SS	=	Plastic Shrink Small Outline – (28-pin) 5.30 mm body (SSOP)
	2N	=	Ultra Thin Plastic Quad Flat, No Lead – (28-pin) 6x6 mm body (UQFN)
	M5	=	Ultra Thin Plastic Quad Flat, No Lead – (36-pin) 5x5 mm body (UQFN)
	PT	=	Thin Quad Flatpack – (48-pin) 7x7 mm body (TQFP)
	M4	=	Ultra Thin Plastic Quad Flat, No Lead – (48-pin) 6x6 mm body (UQFN)

Examples:

dsPIC33CK64MP105-I/PT:
dsPIC33, Enhanced Performance, 64-Kbyte Program Memory, SMPS, 48-Pin, Industrial Temperature, TQFP Package.

NOTES:

© 2018-2019 Microchip Technology Inc.

Note the following details of the code protection feature on Microchip devices:

- Microchip products meet the specification contained in their particular Microchip Data Sheet.
- Microchip believes that its family of products is one of the most secure families of its kind on the market today, when used in the intended manner and under normal conditions.
- There are dishonest and possibly illegal methods used to breach the code protection feature. All of these methods, to our knowledge, require using the Microchip products in a manner outside the operating specifications contained in Microchip's Data Sheets. Most likely, the person doing so is engaged in theft of intellectual property.
- Microchip is willing to work with the customer who is concerned about the integrity of their code.
- Neither Microchip nor any other semiconductor manufacturer can guarantee the security of their code. Code protection does not mean that we are guaranteeing the product as "unbreakable."

Code protection is constantly evolving. We at Microchip are committed to continuously improving the code protection features of our products. Attempts to break Microchip's code protection feature may be a violation of the Digital Millennium Copyright Act. If such acts allow unauthorized access to your software or other copyrighted work, you may have a right to sue for relief under that Act.

Information contained in this publication regarding device applications and the like is provided only for your convenience and may be superseded by updates. It is your responsibility to ensure that your application meets with your specifications. MICROCHIP MAKES NO REPRESENTATIONS OR WARRANTIES OF ANY KIND WHETHER EXPRESS OR IMPLIED, WRITTEN OR ORAL, STATUTORY OR OTHERWISE, RELATED TO THE INFORMATION, INCLUDING BUT NOT LIMITED TO ITS CONDITION, QUALITY, PERFORMANCE, MERCHANTABILITY OR FITNESS FOR PURPOSE**.** Microchip disclaims all liability arising from this information and its use. Use of Microchip devices in life support and/or safety applications is entirely at the buyer's risk, and the buyer agrees to defend, indemnify and hold harmless Microchip from any and all damages, claims, suits, or expenses resulting from such use. No licenses are conveyed, implicitly or otherwise, under any Microchip intellectual property rights unless otherwise stated.

Microchip received ISO/TS-16949:2009 certification for its worldwide headquarters, design and wafer fabrication facilities in Chandler and Tempe, Arizona; Gresham, Oregon and design centers in California and India. The Company's quality system processes and procedures are for its PIC® MCUs and dsPIC® DSCs, KEELOQ® code hopping devices, Serial EEPROMs, microperipherals, nonvolatile memory and analog products. In addition, Microchip's quality system for the design and manufacture of development systems is ISO 9001:2000 certified.

QUALITY MANAGEMENT SYSTEM
CERTIFIED BY DNV
═ ISO/TS 16949 ═

Trademarks

The Microchip name and logo, the Microchip logo, AnyRate, AVR, AVR logo, AVR Freaks, BitCloud, chipKIT, chipKIT logo, CryptoMemory, CryptoRF, dsPIC, FlashFlex, flexPWR, Heldo, JukeBlox, KeeLoq, Kleer, LANCheck, LINK MD, maXStylus, maXTouch, MediaLB, megaAVR, MOST, MOST logo, MPLAB, OptoLyzer, PIC, picoPower, PICSTART, PIC32 logo, Prochip Designer, QTouch, SAM-BA, SpyNIC, SST, SST Logo, SuperFlash, tinyAVR, UNI/O, and XMEGA are registered trademarks of Microchip Technology Incorporated in the U.S.A. and other countries.

ClockWorks, The Embedded Control Solutions Company, EtherSynch, Hyper Speed Control, HyperLight Load, IntelliMOS, mTouch, Precision Edge, and Quiet-Wire are registered trademarks of Microchip Technology Incorporated in the U.S.A.

Adjacent Key Suppression, AKS, Analog-for-the-Digital Age, Any Capacitor, AnyIn, AnyOut, BodyCom, CodeGuard, CryptoAuthentication, CryptoAutomotive, CryptoCompanion, CryptoController, dsPICDEM, dsPICDEM.net, Dynamic Average Matching, DAM, ECAN, EtherGREEN, In-Circuit Serial Programming, ICSP, INICnet, Inter-Chip Connectivity, JitterBlocker, KleerNet, KleerNet logo, memBrain, Mindi, MiWi, motorBench, MPASM, MPF, MPLAB Certified logo, MPLIB, MPLINK, MultiTRAK, NetDetach, Omniscient Code Generation, PICDEM, PICDEM.net, PICkit, PICtail, PowerSmart, PureSilicon, QMatrix, REAL ICE, Ripple Blocker, SAM-ICE, Serial Quad I/O, SMART-I.S., SQI, SuperSwitcher, SuperSwitcher II, Total Endurance, TSHARC, USBCheck, VariSense, ViewSpan, WiperLock, Wireless DNA, and ZENA are trademarks of Microchip Technology Incorporated in the U.S.A. and other countries.

SQTP is a service mark of Microchip Technology Incorporated in the U.S.A.

Silicon Storage Technology is a registered trademark of Microchip Technology Inc. in other countries.

GestIC is a registered trademark of Microchip Technology Germany II GmbH & Co. KG, a subsidiary of Microchip Technology Inc., in other countries.

All other trademarks mentioned herein are property of their respective companies.

© 2019, Microchip Technology Incorporated, All Rights Reserved.

ISBN: 978-1-5224-4080-2

Worldwide Sales and Service

AMERICAS

Corporate Office
2355 West Chandler Blvd.
Chandler, AZ 85224-6199
Tel: 480-792-7200
Fax: 480-792-7277
Technical Support:
http://www.microchip.com/support
Web Address:
www.microchip.com

Atlanta
Duluth, GA
Tel: 678-957-9614
Fax: 678-957-1455

Austin, TX
Tel: 512-257-3370

Boston
Westborough, MA
Tel: 774-760-0087
Fax: 774-760-0088

Chicago
Itasca, IL
Tel: 630-285-0071
Fax: 630-285-0075

Dallas
Addison, TX
Tel: 972-818-7423
Fax: 972-818-2924

Detroit
Novi, MI
Tel: 248-848-4000

Houston, TX
Tel: 281-894-5983

Indianapolis
Noblesville, IN
Tel: 317-773-8323
Fax: 317-773-5453
Tel: 317-536-2380

Los Angeles
Mission Viejo, CA
Tel: 949-462-9523
Fax: 949-462-9608
Tel: 951-273-7800

Raleigh, NC
Tel: 919-844-7510

New York, NY
Tel: 631-435-6000

San Jose, CA
Tel: 408-735-9110
Tel: 408-436-4270

Canada - Toronto
Tel: 905-695-1980
Fax: 905-695-2078

ASIA/PACIFIC

Australia - Sydney
Tel: 61-2-9868-6733

China - Beijing
Tel: 86-10-8569-7000

China - Chengdu
Tel: 86-28-8665-5511

China - Chongqing
Tel: 86-23-8980-9588

China - Dongguan
Tel: 86-769-8702-9880

China - Guangzhou
Tel: 86-20-8755-8029

China - Hangzhou
Tel: 86-571-8792-8115

China - Hong Kong SAR
Tel: 852-2943-5100

China - Nanjing
Tel: 86-25-8473-2460

China - Qingdao
Tel: 86-532-8502-7355

China - Shanghai
Tel: 86-21-3326-8000

China - Shenyang
Tel: 86-24-2334-2829

China - Shenzhen
Tel: 86-755-8864-2200

China - Suzhou
Tel: 86-186-6233-1526

China - Wuhan
Tel: 86-27-5980-5300

China - Xian
Tel: 86-29-8833-7252

China - Xiamen
Tel: 86-592-2388138

China - Zhuhai
Tel: 86-756-3210040

ASIA/PACIFIC

India - Bangalore
Tel: 91-80-3090-4444

India - New Delhi
Tel: 91-11-4160-8631

India - Pune
Tel: 91-20-4121-0141

Japan - Osaka
Tel: 81-6-6152-7160

Japan - Tokyo
Tel: 81-3-6880- 3770

Korea - Daegu
Tel: 82-53-744-4301

Korea - Seoul
Tel: 82-2-554-7200

Malaysia - Kuala Lumpur
Tel: 60-3-7651-7906

Malaysia - Penang
Tel: 60-4-227-8870

Philippines - Manila
Tel: 63-2-634-9065

Singapore
Tel: 65-6334-8870

Taiwan - Hsin Chu
Tel: 886-3-577-8366

Taiwan - Kaohsiung
Tel: 886-7-213-7830

Taiwan - Taipei
Tel: 886-2-2508-8600

Thailand - Bangkok
Tel: 66-2-694-1351

Vietnam - Ho Chi Minh
Tel: 84-28-5448-2100

EUROPE

Austria - Wels
Tel: 43-7242-2244-39
Fax: 43-7242-2244-393

Denmark - Copenhagen
Tel: 45-4450-2828
Fax: 45-4485-2829

Finland - Espoo
Tel: 358-9-4520-820

France - Paris
Tel: 33-1-69-53-63-20
Fax: 33-1-69-30-90-79

Germany - Garching
Tel: 49-8931-9700

Germany - Haan
Tel: 49-2129-3766400

Germany - Heilbronn
Tel: 49-7131-67-3636

Germany - Karlsruhe
Tel: 49-721-625370

Germany - Munich
Tel: 49-89-627-144-0
Fax: 49-89-627-144-44

Germany - Rosenheim
Tel: 49-8031-354-560

Israel - Ra'anana
Tel: 972-9-744-7705

Italy - Milan
Tel: 39-0331-742611
Fax: 39-0331-466781

Italy - Padova
Tel: 39-049-7625286

Netherlands - Drunen
Tel: 31-416-690399
Fax: 31-416-690340

Norway - Trondheim
Tel: 47-7288-4388

Poland - Warsaw
Tel: 48-22-3325737

Romania - Bucharest
Tel: 40-21-407-87-50

Spain - Madrid
Tel: 34-91-708-08-90
Fax: 34-91-708-08-91

Sweden - Gothenberg
Tel: 46-31-704-60-40

Sweden - Stockholm
Tel: 46-8-5090-4654

UK - Wokingham
Tel: 44-118-921-5800
Fax: 44-118-921-5820

© 2018-2019 Microchip Technology Inc.