BM83 Bluetooth® Stereo Audio Module Data Sheet

Introduction

The BM83, based on Microchip's dual-mode IS2083 system-on-chip (SoC) device, is an RF-certified, fully integrated module with high-performing voice and audio post-processing capability for Bluetooth audio applications. Tuning for Noise Reduction, Acoustic Echo Cancellation (AEC), and EQ filtering can be customized with an easy-to-use GUI Configuration Tool. This flexible platform provides multiple digital and analog audio interfaces including stereo microphones, I^2S, Line-In and a stereo audio DAC. It supports easy firmware upgrades via UART, USB and Over-the-Air (OTA).

This turn-key solution module is pre-programmed with firmware that enables Bluetooth audio playback for a plug-and-play solution, and an audio transceiver solution for A2DP source/sink. Control settings for LED drivers and other peripherals can be set via the Configuration Tool. Advanced developers can use the Software Development Kit (SDK) to implement their applications.

Note: Contact your local sales representative for more information about the Software Development Kit (SDK).

Figure 1. BM83 Module Block Diagram

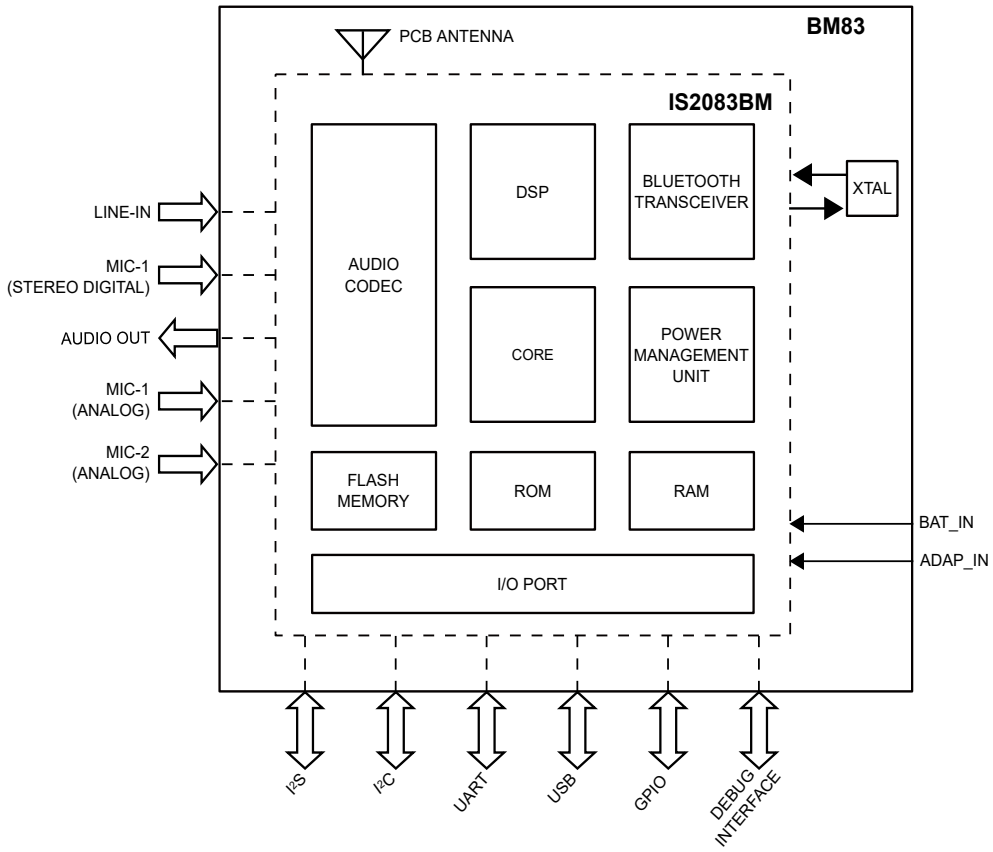

The BM83 module supports the following Bluetooth profiles and codecs:

- Profiles:
  - Hands-free Profile (HFP) 1.7, Headset Profile (HSP) 1.2, Advanced Audio Distribution Profile (A2DP) 1.3, Serial Port Profile (SPP) 1.2, Audio/Video Remote Control Profile (AVRCP) 1.6, and Phone Book Access Profile (PBAP) 1.2
- Codecs:
  - Advanced Audio Codec (AAC) and Sub-band Coding (SBC)

Features

- Qualified for Bluetooth v5.0 Specification:
  - HFP 1.7, HSP 1.2, A2DP 1.3, SPP 1.2, AVRCP 1.6, and PBAP 1.2
  - Bluetooth classic (BR/EDR) and Bluetooth Low Energy
  - General Attribute Profile (GATT) and General Access Profile (GAP)
  - Bluetooth Low Energy Data Length Extension (DLE) and secure connection
- SDK:
  - 8051 MCU debugging
  - 24-bit program counter and data pointer modes
- Multi-Link:
  - A2DP (maximum 3 devices)
  - HFP (maximum 3 devices)
- Multi-Speaker (MSPK) Solution:
  - Microchip's proprietary solution to connect a master speaker to one or more slave speakers
  - With MSPK firmware, the BM83 can provide Concert mode and Stereo mode
- Audio Transceiver (AT) Solution:
  - With AT firmware, the BM83 can work as either an A2DP source (where BM83 is the transmitter) or A2DP/HFP sink (where BM83 is a receiver)
- Audio Interfaces:
  - Stereo line input
  - Two analog microphones
  - One stereo digital microphone
  - Stereo audio Digital-to-Analog converter (DAC)
  - Inter-IC (I^2S) Sound input/output
  - I^2S Master Clock (MCLK)/reference clock
- USB, UART, and Over-the-Air (OTA) Firmware Upgrade
- Built-In Lithium-Ion and Lithium Polymer Battery Charger (Up To 350 mA Charging Current)
- Compact Surface Mount Module:
  - 32 mm x 15 mm x 2.5 mm
  - Castellated surface mount pads
  - Module shield
- Integrated 3V and 1.8V Configurable Switching Regulator and Low-Dropout (LDO)

RF/Analog

- Frequency Spectrum: 2.402 GHz to 2.480 GHz
- Receive Sensitivity: –90 dBm (2 Mbps EDR, at 0.01% BER)
- Programmable Transmit Output Power:
  - Up to +10.4 dBm (typical) for Basic Data Rate (BDR)
  - Up to +9.2 dBm (typical) for Enhanced Data Rate (EDR)

DSP Voice and Audio Processing

- 16/32-bit DSP Core with Enhanced 32-Bit Precision, Single Cycle Multiplier
- 64 Kbps A-Law, μ-Law Pulse Code Modulation (PCM), or Continuous Variable Slope Delta (CVSD) Modulation for Synchronous Connection-Oriented (SCO) Channel Operation
- 8/16 kHz Noise Reduction (NR)
- 8/16 kHz Acoustic Echo Cancellation (AEC)
- Modified Sub-Band Coding (mSBC) Decoder for Wideband Speech
- Packet Loss Concealment (PLC) for SBC and AAC Codecs Only

Audio Codec

- SBC and AAC
- 20-bit Audio Stereo DAC with Signal-to-Noise Ratio (SNR) 95 dB
- 16-bit Audio Stereo Analog-to-Digital Converter (ADC) with SNR 90 dB
- 16-bit/24-bit I^2S Digital Audio:
  - 8 kHz, 16 kHz, 44.1 kHz, and 48 kHz sampling frequency for SBC and AAC

Peripherals

- Successive Approximation Register Analog-to-Digital Converter (SAR ADC) with Dedicated Channels:
  - Battery voltage detection and adapter voltage detection
  - Charger thermal protection and ambient temperature detection
- UART (With Hardware Flow Control)
- USB (Full-Speed USB 1.1 Interface)
- Inter-Integrated Circuit (I^2C™) Master
- One Pulse Width Modulation (PWM) Channel
- Two LED Drivers
- Up to 18 General Purpose Inputs/Outputs (GPIOs)
- 2-wire 8051 MCU Joint Test Action Group (JTAG) Debug

Operating Conditions

- Operating Voltage: 3.2V to 4.2V
- Operating Temperature: –40°C to +85°C

Compliance

- Bluetooth Special Interest Group (SIG) QDID: 134083 (Class1) and 134099 (Class2)
- Certified to the United States (FCC), Canada (ISED), Europe (CE), Korea (KCC), Taiwan (NCC), and Japan (MIC) Radio Regulations
- RoHS Compliant

Applications

- Portable Speaker
- Multiple Speakers
- Headphones

Table of Contents

Introduction....1

Features....2

1. Quick References....6
   - 1.1. Reference Documentation....6
   - 1.2. Design Packages....6
   - 1.3. Acronyms/Abbreviations....6

2. Device Overview....9
   - 2.1. BM83 Module Pin Diagram....11
   - 2.2. BM83 Module Pin Description....12

3. Audio Subsystem....15
   - 3.1. Digital Signal Processor....15
   - 3.2. Codec....16
   - 3.3. Auxiliary Port....34
   - 3.4. Analog Speaker Output....34
   - 3.5. Microphone Inputs....35

4. Bluetooth Transceiver....36
   - 4.1. Transmitter....36
   - 4.2. Receiver....36
   - 4.3. Synthesizer....36
   - 4.4. **Modulator-Demodulator**....36
   - 4.5. Adaptive Frequency Hopping....36

5. Power Management Unit....37
   - 5.1. Power Supply....37
   - 5.2. SAR ADC....38
   - 5.3. LED Drivers....40

6. Application Information....41
   - 6.1. Power On/Off Sequence....41
   - 6.2. Reset....42
   - 6.3. Configuring and Programming....43
   - 6.4. General Purpose I/O Pins....44
   - 6.5. I^2S Interface....45
   - 6.6. Host MCU Interface Over UART....46

7. PCB Antenna Information....50
   - 7.1. Antenna Radiation Pattern....50
   - 7.2. Module Placement Guidelines....53

8. Physical Dimensions....55

9. Electrical Specifications....57
   - 9.1. Timing Specifications....62

10. Soldering Recommendations....64
11. Ordering Information....65
12. Appendix A: Regulatory Approval....66
12.1. United States....66
12.2. Canada....67
12.3. Europe....69
12.4. Japan....70
12.5. Korea....71
12.6. Taiwan....71
12.7. Other Regulatory Information....72
13. Document Revision History....73
The Microchip Website....74
Product Change Notification Service....74
Customer Support....74
Microchip Devices Code Protection Feature....74
Legal Notice....74
Trademarks....75
Quality Management System....75
Worldwide Sales and Service....76

1. Quick References

1.1 Reference Documentation

For further study, refer to the following:

- *IS2083 Bluetooth® Stereo Audio SoC Data Sheet* (DS70005403)
- *BM83 Bluetooth® Audio Development Board User's Guide* (DS50002902)
- *IS2083 SDK User Guide* (DS50002894)
- *BM83 Host MCU Firmware Development Guide* (DS50002896)
- *IS2083/BM83 Bluetooth® Application Design Guide* (DS00003118)
- *IS2083 SDK Debugger User's Guide* (DS50002892)
- *IS2083 Reference Design Application Note*
- *IS2083/BM83 Battery Charger Application Note* (AN3490)
- *AN233 Solder Reflow Recommendation Application Note* (DS00233)

Notes:

1. For a complete list of development support tools and documents, visit:
   - www.microchip.com/BM83
   - www.microchip.com/IS2083
2. Contact your local sales representative for more information about the Software Development Kit (SDK).

1.2 Design Packages

For reference schematics, refer to www.microchip.com/wwwproducts/en/BM83.

1.3 Acronyms/Abbreviations

Table 1-1. Acronyms/Abbreviations

Acronyms/Abbreviations	Description
A2DP	Advanced Audio Distribution Profile
AAC	Advanced Audio Codec
ADC	Analog-to-Digital Converter
AEC	Acoustic Echo Cancellation
AFH	Adaptive Frequency Hopping
ANCS	Apple Notification Center Service
API	Application Programming Interfaces
AVRCP	Audio/Video Remote Control Profile
AW	Audio Widening
BDR	Basic Data Rate
BER	Bit Error Rate
BLE	Bluetooth Low Energy
BOM	Bill of Materials
BPF	Band Pass Filter
BR	Basic Rate

.....continued

Acronyms/Abbreviations	Description
CVSD	Continuous Variable Slope Delta
DAC	Digital-to-Analog Converter
DFU	Device Firmware Upgrade
DIS	Device Information Service
DLE	Data Length Extension
DPSK	Differential Phase Shift Keying
DQPSK	Differential Quadrature Phase Shift Keying
DR	Receive Data
DSP	Digital Signal Processor
DT	Transmit Data
EDR	Enhanced Data Rate
EMC	Electromagnetic Compatibility
EVB	Evaluation Board
FET	Field Effect Transistor
GAP	General Access Profile
GATT	General Attribute Profile
GFSK	Gaussian Frequency Shift Keying
GPIO	General Purpose Input Output
GUI	Graphical User Interface
HFP	Hands-free Profile
HPF	High Pass Filter
HSP	Headset Profile
HW	Hardware
I^2C	Inter-Integrated Circuit
I^2S	Inter-IC Sound
IC	Integrated Circuit
ICSP	In-Circuit Serial Programming
IDE	Integrated Development Environment
IF	Intermediate Frequency
IPE	Integrated Programming Environment
JTAG	Joint Test Action Group
LDO	Low-Dropout
LED	Light Emitting Diode
LNA	Low-Noise Amplifier
LPA	Linear Power Amplifier
LSB	Least Significant Bit
MAC	Medium Access Control
MB DRC	Multiband Dynamic Range Compression
MCLK	Master Clock
MCU	Microcontroller

.....continued

Acronyms/Abbreviations	Description
MEMS	Micro-Electro-Mechanical Systems
MFB	Multi-function Button
Modem	Modulator-demodulator
MPA	Medium Power Amplifier
mSBC	Modified Sub-band Coding
MSPK	Multi-speaker
NR	Noise Reduction
OTA	Over-the-Air
PBAP	Phone Book Access Profile
PCB	Printed Circuit Board
PCM	Pulse Code Modulation
PDM	Pulse Density Modulation
PIM	Plug-in Module
PLC	Packet Loss Concealment
PMU	Power Management Unit
POR	Power-on Reset
PWM	Pulse Width Modulation
RF	Radio Frequency
RFS	Receive Frame Sync
RoHS	Restriction of Hazardous Substances
RSSI	Received Signal Strength Indicator
RX	Receiver
SAR	Successive Approximation Register
SBC	Sub-band Coding
SCO	Synchronous Connection-oriented
SDK	Software Development Kit
SIG	Special Interest Group
SNR	Signal-to-Noise Ratio
SoC	System-on-Chip
SPP	Serial Port Profile
SW	Software
TX	Transmitter
UART	Universal Asynchronous Receiver-Transmitter
UI	User Interface
USB	Universal Serial Bus
VB	Virtual Bass Enhancement
VCO	Voltage-controlled Oscillator
WDT	Watchdog Timer

2. Device Overview

The BM83 stereo audio module is built around the IS2083BM SoC, which integrates the dual-mode baseband, modem, radio transceiver, PMU, MCU, crystal, and a DSP dedicated for audio and voice applications. Users can configure the BM83 module by using the SDK or the IS208x_Config_GUI_Tool (Config Tool).

There are two modes of operation:

- Host mode:
  - Interfaces with an external MCU over UART for application specific system control
  - The MSPK solution and AT solution can reside on the external MCU
- Embedded mode:
  - No external MCU involved
  - BM83 acts as an MCU to control all peripherals to provide various speaker features
  - Integrates the MSPK and AT solution on the module

Simple system control can be implemented using the SDK. DSP parameters such as equalizer settings can be set using the Config Tool.

Note: The SDK and Config Tool are available for download at: www.microchip.com/BM83.

The following figure illustrates the Embedded mode and Host mode of the BM83 module.

Figure 2-1. BM83 Module Application Modes

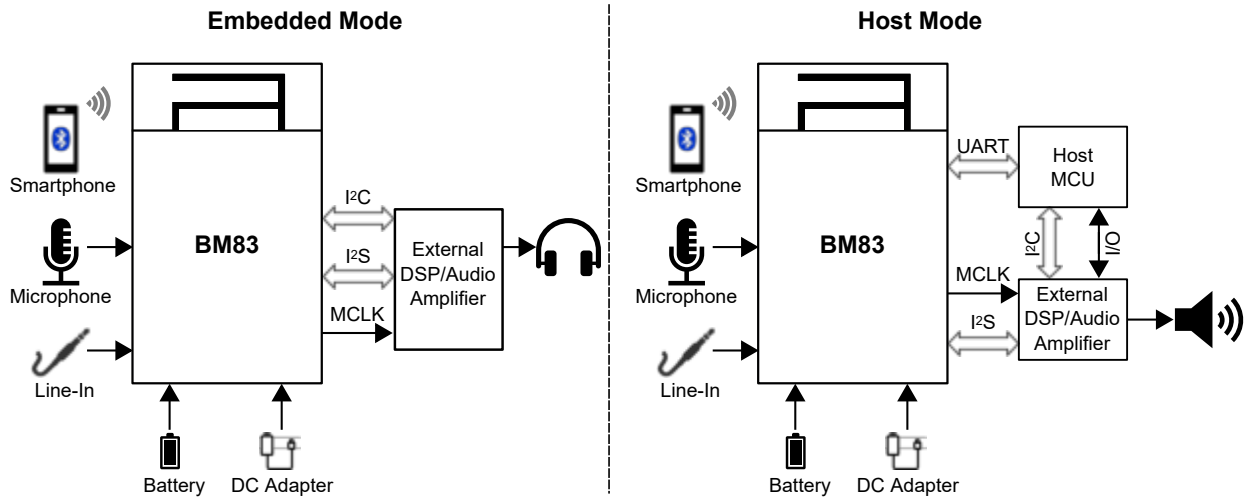

The following table provides the features of the BM83 module.

Table 2-1. BM83 Module Features

Features	BM83SM1
SoC	IS2083BM
Pin Count	50
Dimension	32 mm x 15 mm
RF	
PCB Antenna	Yes
TX Power (typical)	+11 dBm (Class1) and +1 dBm (Class2)
RX Sensitivity	-90 dBm (2 Mbps EDR)
Bluetooth Power Class	Class 1 and Class 2
RF Shield	Yes
Audio	
Audio DAC Output	2-channel
DAC (Single-ended) SNR	-95 dB
DAC (Capless) SNR	-95 dB
ADC SNR	-90 dB
I^2S Audio (Input/Output) with Master Clock (MCLK) Output	Yes
Analog Auxiliary In	Yes
Analog Microphone	2
Stereo Digital Microphone	1
External Audio Amp Interface	Yes
Power	
Battery Input (BAT_IN)	3.8V (typ.)
DC Adapter Input (ADAP_IN)	5.0V (typ.)
Integrated BUCK Regulator	Yes
Battery Charger (350 mA charging current max)	Yes
Peripherals	
UART (with HW flow control)	Yes
I^2C Master	Yes
USB (full speed USB v1.1 interface)	Yes
SAR ADC	2
PWM	1
LED Driver	2
GPIOs	18
JTAG Debug Port (8051 MCU)	2-wire

2.1 BM83 Module Pin Diagram

The following figure illustrates the pin diagram of the BM83 module.

Figure 2-2. BM83 Module Pin Diagram

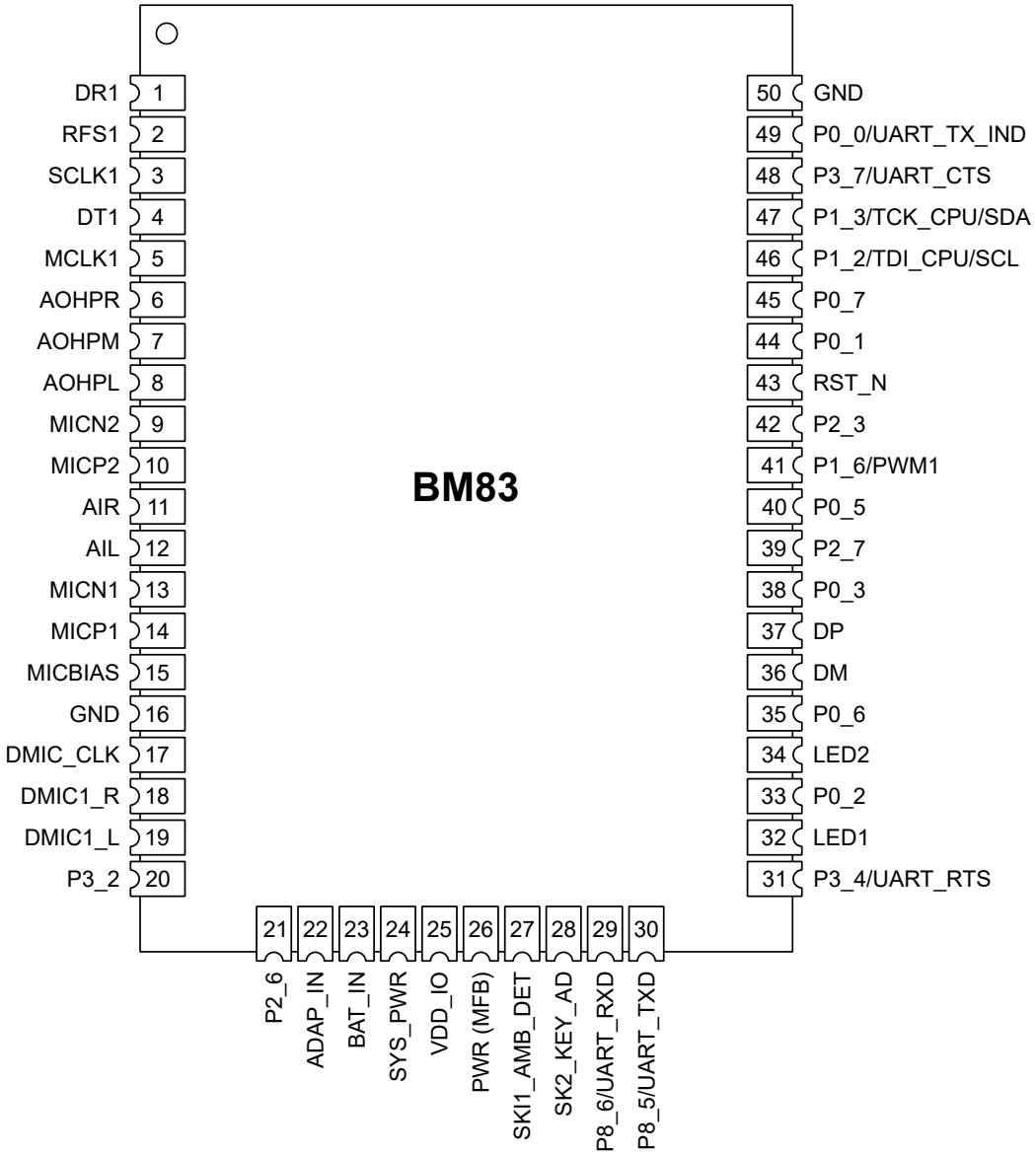

2.2 BM83 Module Pin Description

The following table describes the pin description of the BM83 module.

Table 2-2. BM83 Module Pin Description

Pin Number	Pin Name	Pin Type	Description
1	DR1	I	I^2S interface: digital left/right data
2	RFS1	I/O	I^2S interface: digital left/right clock
3	SCLK1	I/ O	I^2S interface: bit clock
4	DT1	O	I^2S interface: digital left/right data
5	MCLK1	O	I^2S interface: master clock
6	AOHPR	O	R-channel analog headphone output
7	AOHPM	O	Headphone common mode output/sense input
8	AOHPL	O	L-channel analog headphone output
9	MICN2	I	MIC 2 mono differential analog negative input
10	MICP2	I	MIC 2 mono differential analog positive input
11	AIR	I	R-channel single-ended analog input
12	AIL	I	L-channel single-ended analog input
13	MICN1	I	MIC 1 mono differential analog negative input
14	MICP1	I	MIC 1 mono differential analog positive input
15	MICBIAS	P	Electric microphone biasing voltage
16	GND	P	Ground reference
17	DMIC_CLK	O	Digital MIC clock output
18	DMIC1_R	I	Digital MIC right input
19	DMIC1_L	I	Digital MIC left input
20	P3_2	I/O	• General purpose I/O port P3_2 • By default, this is configured as AUX_IN DETECT
21	P2_6	I/O	General purpose I/O port P2_6
22	ADAP_IN	P	• 5V power adapter input • To charge the battery in the Li-ion battery powered applications • To be used for USB Device Firmware Upgrade (DFU) • Otherwise it can be left floating
23	BAT_IN	P	• Power supply input; voltage range: 3.2V to 4.2V • Source can either be a Li-ion battery or any other power rail on the host board

.....continued

Pin Number	Pin Name	Pin Type	Description
24	SYS_PWR	P	• System power output derived from the ADAP_IN or BAT_IN input • Only for internal use • Do not connect to any other devices • LED1 and LED2 can be connected to SYS_PWR
25	VDD_IO	P	I/O power supply, do not connect, for internal use only (connected to LDO31_VO)
26	PWR (MFB)	I	Multi-function push button and Power On key
27	SK1_AMB_DET	I	Temperature sense channel 1
28	SK2_KEY_AD	I	Temperature sense channel 2
29	P8_6 / UART_RXD	I/O	• General purpose I/O port P8_6 • UART RX data
30	P8_5 / UART_TXD	I/O	• General purpose I/O port P8_5 • UART TX data
31	P3_4 / UART_RTS	I/O	• General purpose I/O port P3_4 • System configuration pin (Application mode or Test mode) • UART RTS
32	LED1	I	LED driver 1
33	P0_2	I/O	• General purpose I/O port P0_2 • By default, this is configured as play/pause button (user configurable button)
34	LED2	I	LED driver 2
35	P0_6	I/O	• General purpose I/O port P0_6
36	DM	I/O	USB data minus data line
37	DP	I/O	USB data positive data line
38	P0_3	I/O	• General purpose I/O port P0_3 • By default, this is configured as reverse button (user configurable button)
39	P2_7	I/O	• General purpose I/O port P2_7 • By default, this is configured as volume up button (user configurable button)
40	P0_5	I/O	• General purpose I/O port P0_5 • By default, this is configured as volume down button (user configurable button)
41	P1_6 / PWM1	I/O	• General purpose I/O port P1_6 • PWM1 output
42	P2_3	I/O	General purpose I/O port P2_3
43	RST_N	I	System Reset pin (active-low)

.....continued			
Pin Number	**Pin Name**	**Pin Type**	**Description**
44	P0_1	I/O	• General purpose I/O port P0_1 • By default, this is configured as forward button (user configurable button)
45	P0_7	I/O	General purpose I/O port P0_7
46	P1_2 / TDI_CPU / SCL	I/O	• General purpose I/O port P1_2 • CPU 2-wire debug data • I^2C SCL
47	P1_3 / TCK_CPU / SDA	I/O	• General purpose I/O port P1_3 • CPU 2-wire debug clock • I^2C SDA
48	P3_7 / UART_CTS	I/O	• General purpose I/O port P3_7 • UART CTS
49	P0_0 / UART_TX_IND	I/O	• General purpose I/O port P0_0 • By default, this is configured as an external codec reset (Embedded mode) • UART_TX_IND (active-high) used to wake-up the host MCU (Host mode)
50	GND	P	Ground reference

Note: The BM83 module is pre-configured with Embedded mode (see, 6.4 General Purpose I/O Pins). The GPIOs mentioned in the preceding table can be configured using the Config Tool or the SDK.

3. Audio Subsystem

The input and output audios have different stages and each stage can be programmed to vary the gain response characteristics. For microphone, both single-ended inputs and differential inputs are supported. To maintain a high quality signal, a stable bias voltage source to the condenser microphone's Field-Effect Transistor (FET) is provided. The DC blocking capacitors can be used at both positive and negative sides of an input. Internally, this analog signal is converted to 16-bit, 8 kHz/16 kHz/44.1 kHz/48 kHz linear PCM data.

The following figure shows the audio subsystem.

Figure 3-1. Audio Subsystem

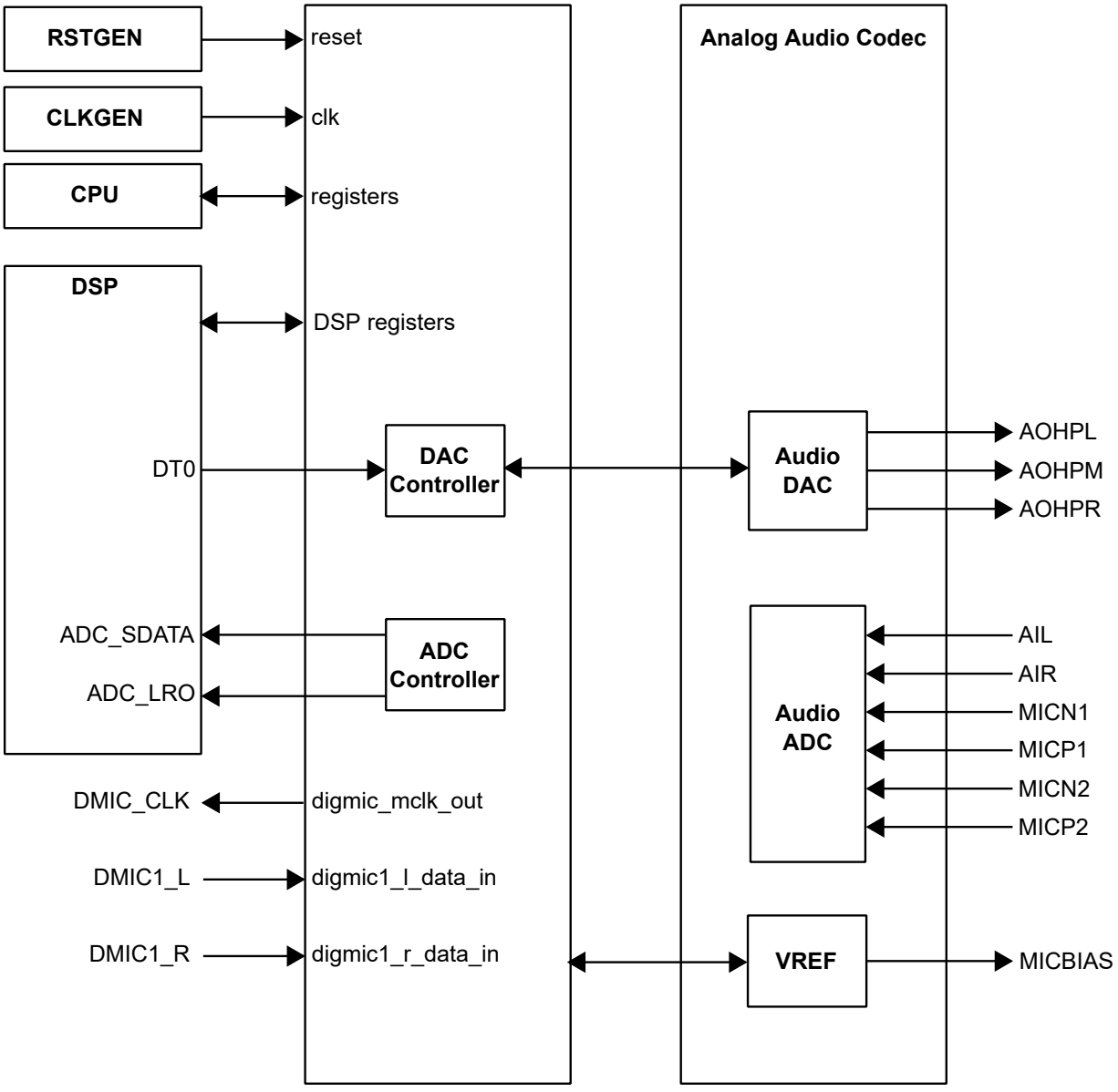

3.1 Digital Signal Processor

The BM83 module integrates a high-performance DSP to provide excellent voice and audio user experience. The advanced speech features, such as AEC and NR are inbuilt. To reduce nonlinear distortion and echo cancellation, an

outgoing signal level to the speaker is monitored and adjusted to avoid saturation of speaker output or microphone input. Adaptive filtering is also applied to track the echo path impulse in response, to provide an echo free and full-duplex user experience.

The embedded noise reduction algorithm helps to extract clean speech signals from the noisy inputs captured by the microphones and improves communication.

In addition to NR/AEC function, audio effect functions such as Multiband Dynamic Range Compression (MB-DRC), virtual bass enhancement (VB), and audio widening (AW)), for A2DP audio streaming are also available to enhance the audio quality for various applications. For mono speaker/speakerphone and stereo headset applications, MB-DRC and VB can be enabled to have better audio clarity. For stereo speaker/speakerphone applications, in addition to MB-DRC and VB, AW can be enabled to provide better live audio effect for the users.

The following figures illustrate the signal processing flow of speakerphone applications for speech and audio signal processing.

Figure 3-2. Speech Signal Processing

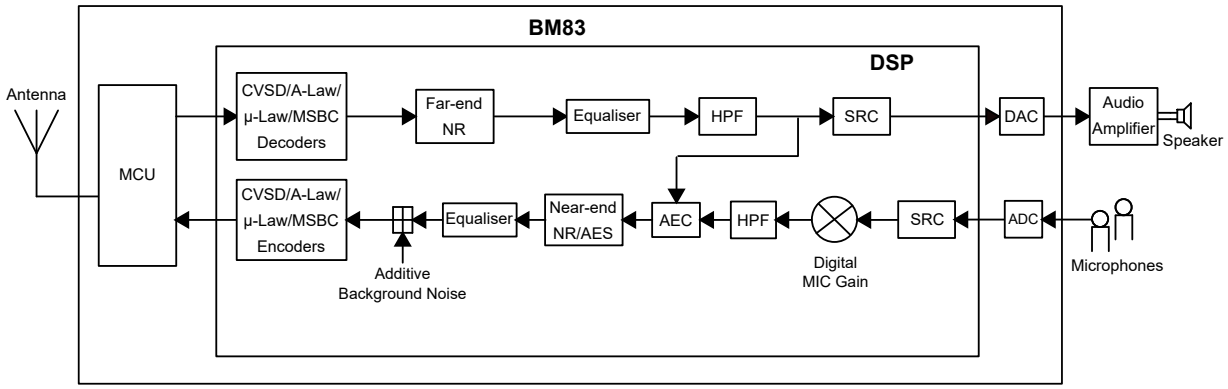

Figure 3-3. Audio Signal Processing

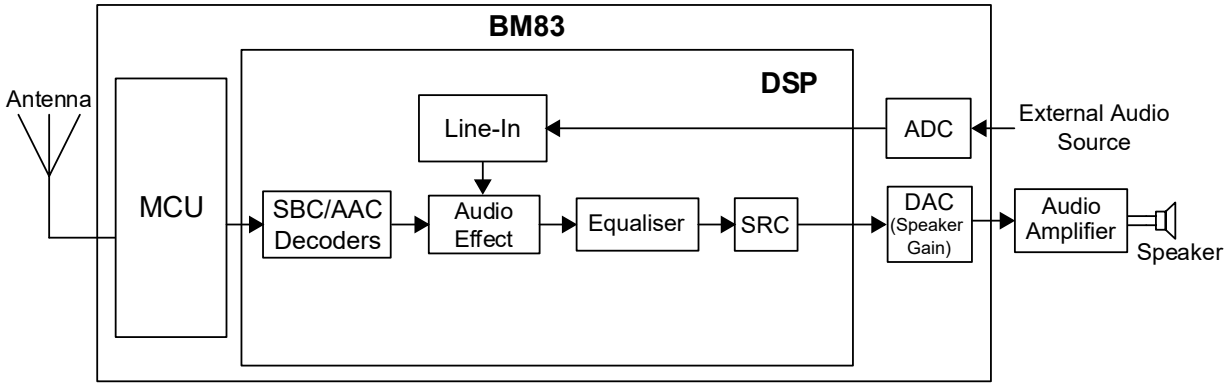

Note:

1. The DSP parameters can be configured using the Config Tool.

3.2 Codec

The built-in codec has a high SNR performance and it consists of an ADC, a DAC and an additional analog circuitry. The internal codec supports 20-bit resolution for DAC and 16-bit resolution for ADC.

- Interfaces
  - Two mono differential or single-ended MIC inputs
  - One stereo single-ended line input
  - One stereo single-ended line output

  - One stereo single-ended headphone output (capacitor-less connection)
- Built-in circuit
  - MIC bias
  - Reference and biasing circuitry
- Optional digital High Pass Filter (HPF) on ADC path
- Silence detection
  - To turn off the DSP and audio codec subsystem, if there is no Line-In data after UI configured time stamp.
- Anti-pop function (pop reduction system to reduce audible glitches)
- Sampling rates:
  - ADC/DAC/I^2S: 8 kHz, 16 kHz, 44.1 kHz, and 48 kHz

Note: The sampling rates can be selected in the **CODEC Setup** tab of Config Tool.

3.2.1 DAC Performance

The audio graphs in this section are produced in the following conditions:

- At room temperature
- Using BM83 EVB platform with BM83 module mounted on BM83 Carrier Board
- Input signal = 1 kHz sine tone, level sweep across -100 dBv to 6 dBv, frequency sweep across 20 Hz to 20 kHz at 1 Fs input level
- Various termination loads (16Ω, 32Ω, 100 kΩ)
- Analog gain = -3 dB; digital gain = 0 dB
- A-weighting applied, 22K bandwidth.

The following figures illustrate the DAC performance.

Figure 3-4. Gain Vs. Input Level at Various Loads (Capless Mode)

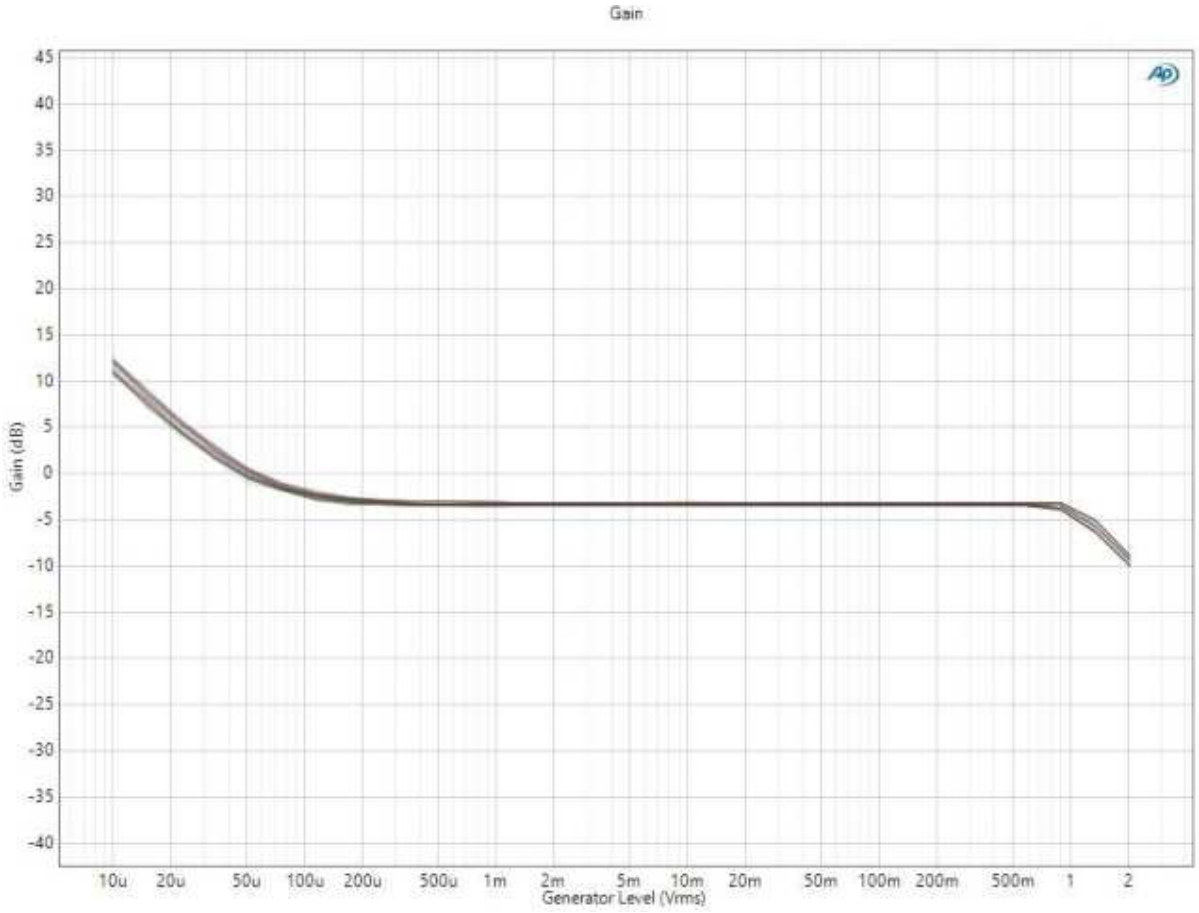

Figure 3-5. Gain Vs. Input Level at Various Loads (Single-ended Mode)

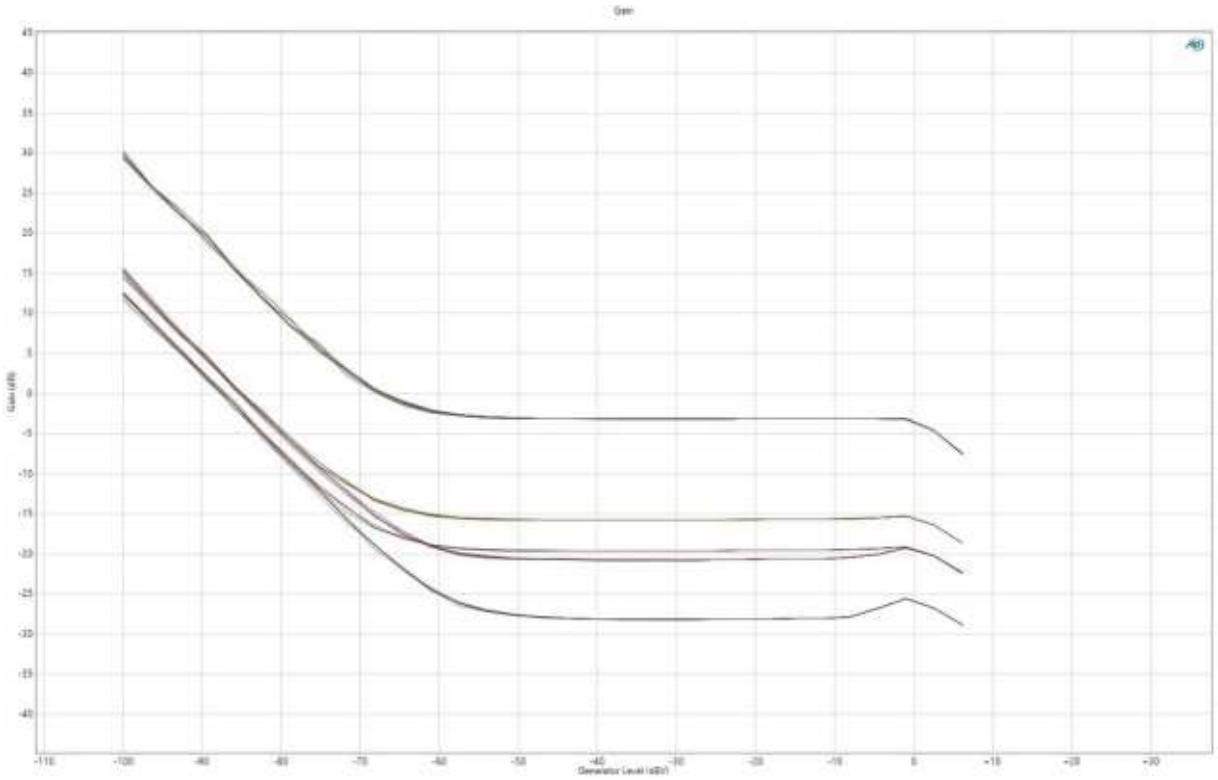

Figure 3-6. Gain Vs. Frequency at Various Loads (Capless Mode)

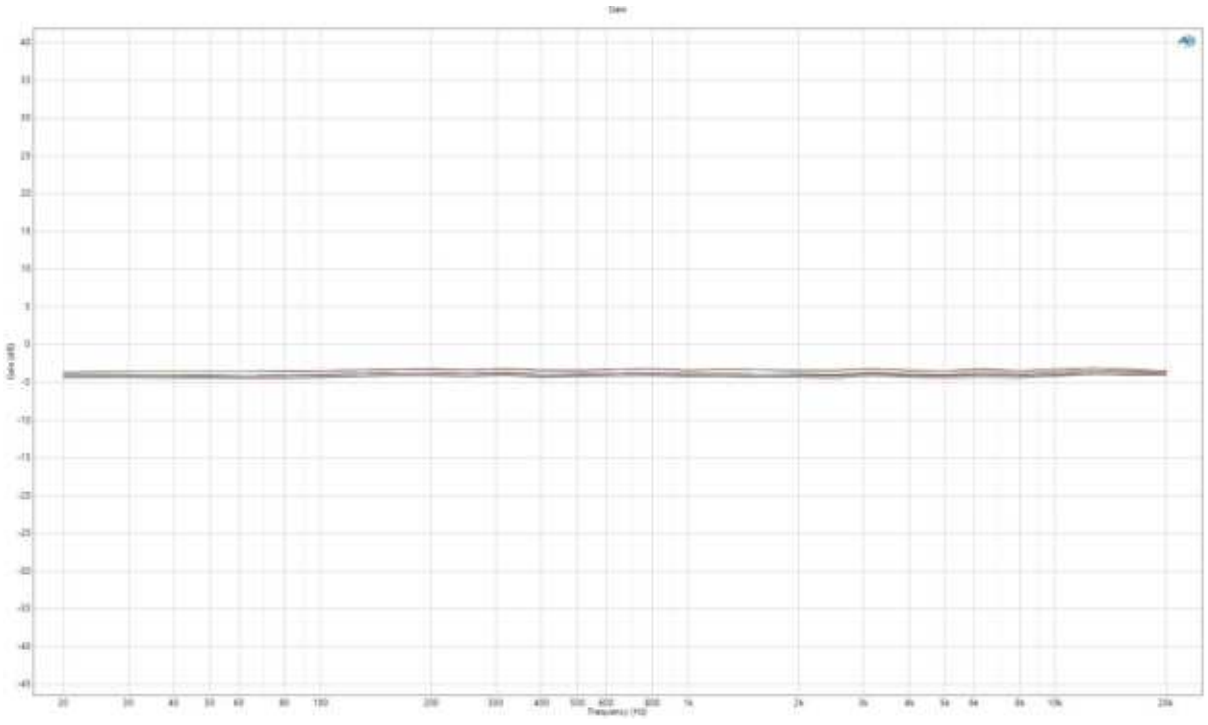

Figure 3-7. Gain Vs. Frequency at Various Loads (Single-ended Mode)

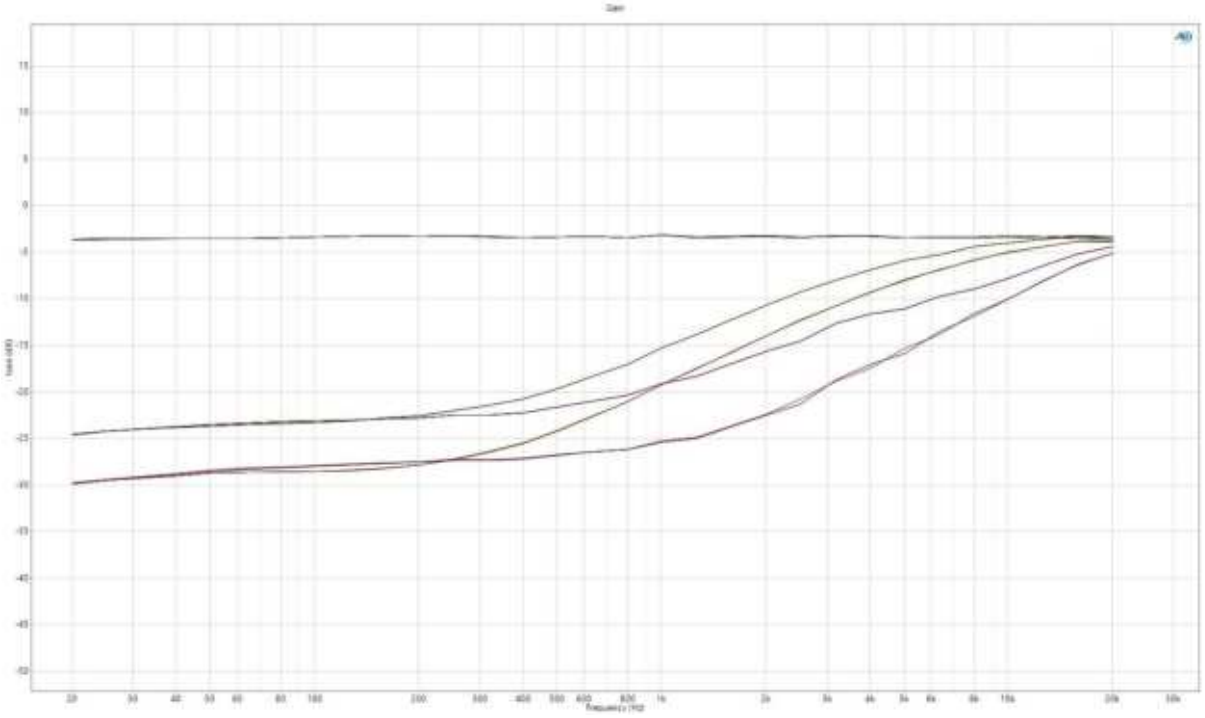

Figure 3-8. Level Vs. Frequency at Various Loads (Capless Mode)

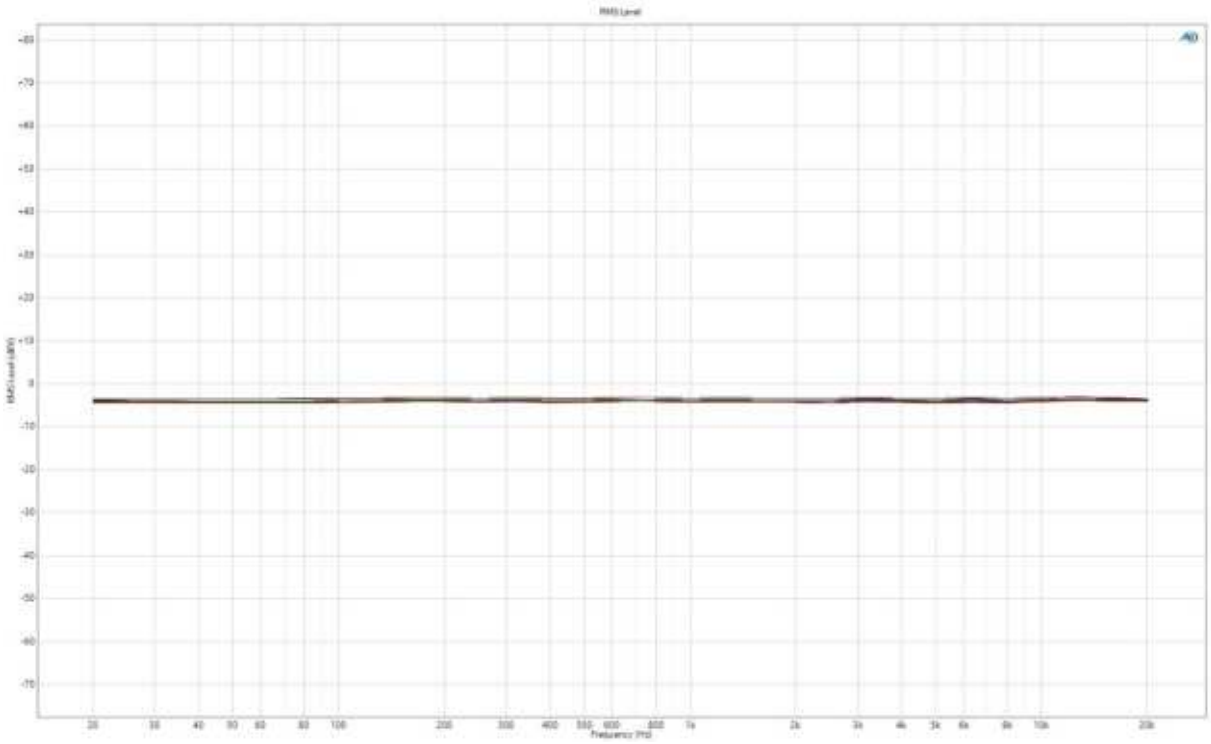

Figure 3-9. Level Vs. Frequency at Various Loads (Single-ended Mode)

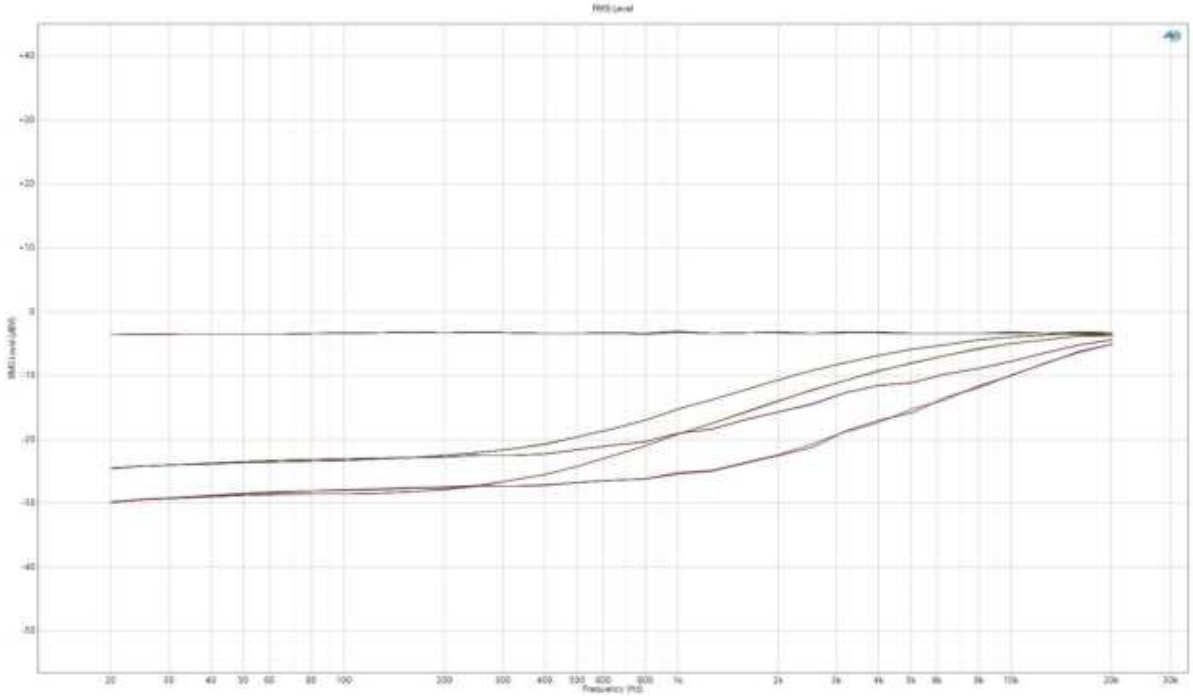

Figure 3-10. THD Ratio (%) Vs. Input Level at Various Loads (Capless Mode)

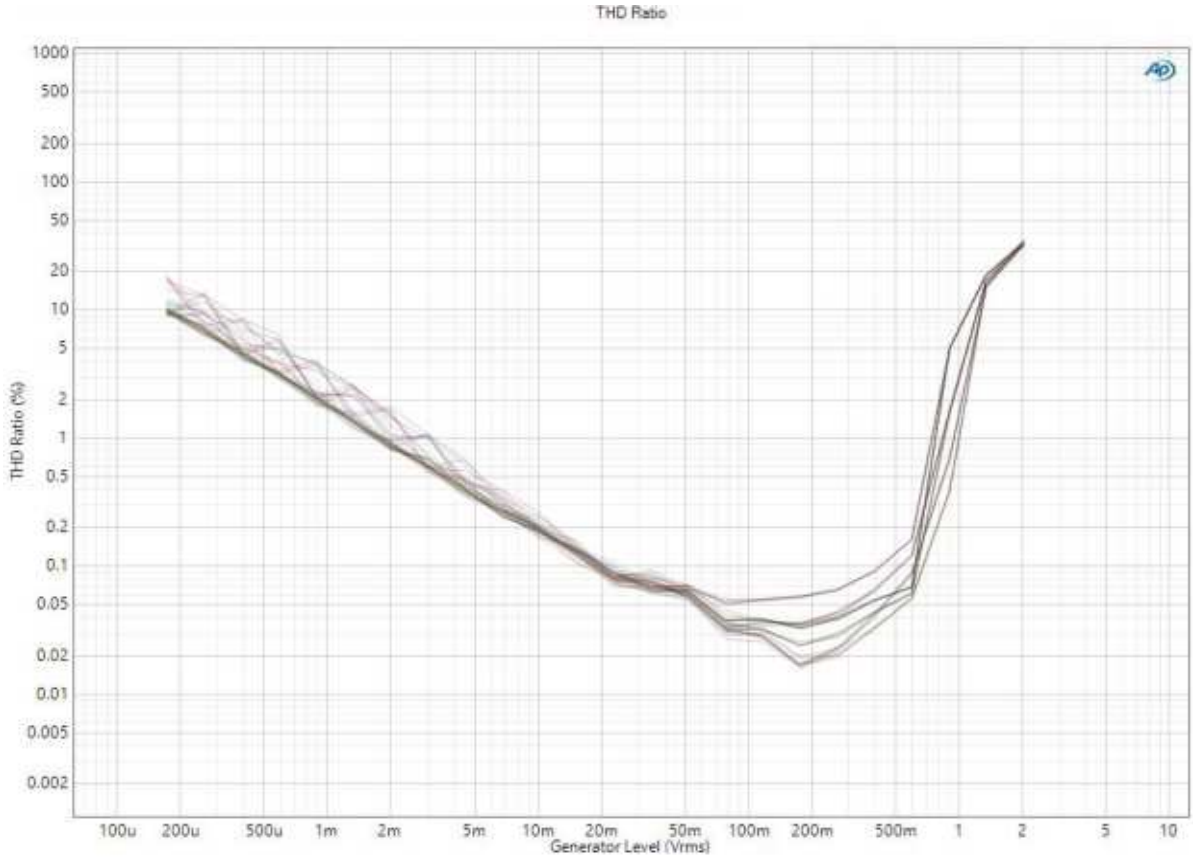

Figure 3-11. THD Ratio (dB) Vs. Input Level at Various Loads (Capless Mode)

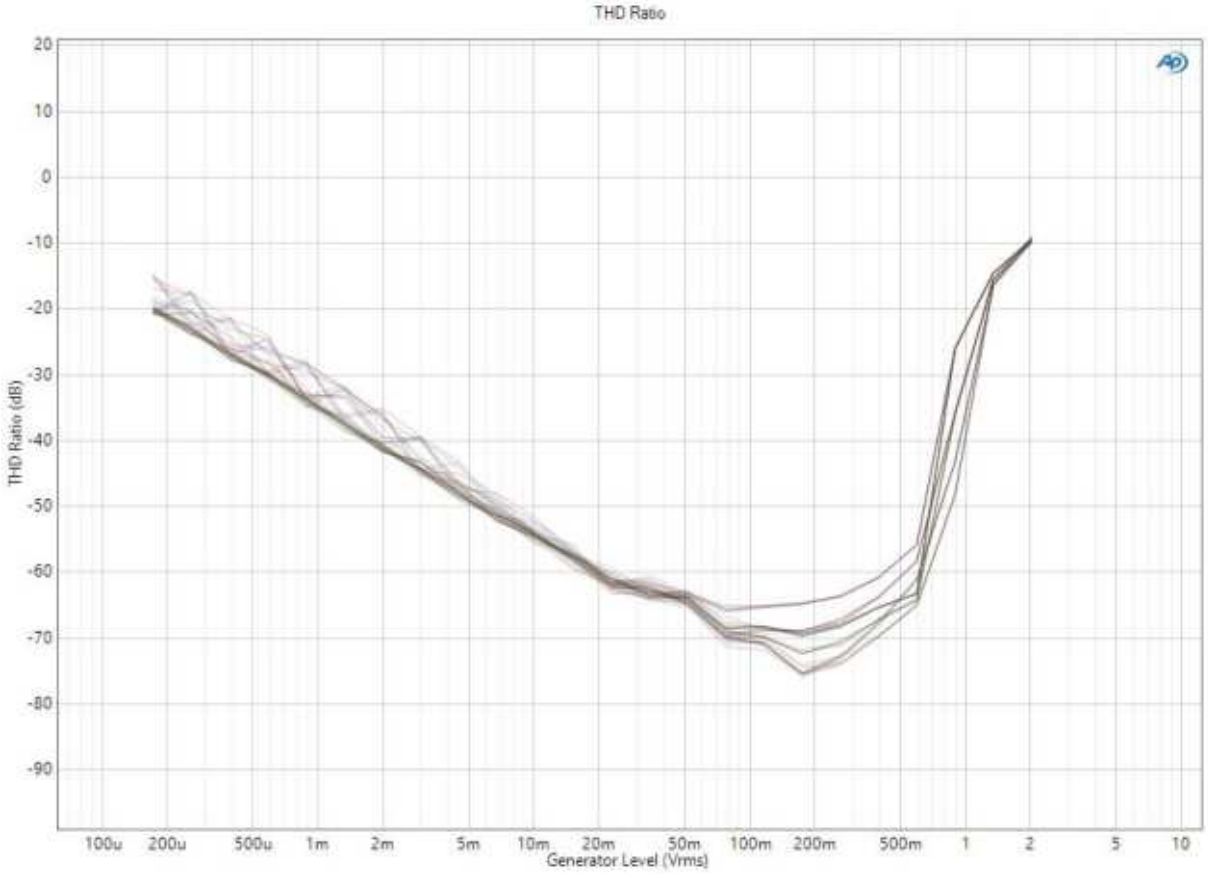

Figure 3-12. THD+N Ratio (%) Vs. Input Level at Various Loads (Capless Mode)

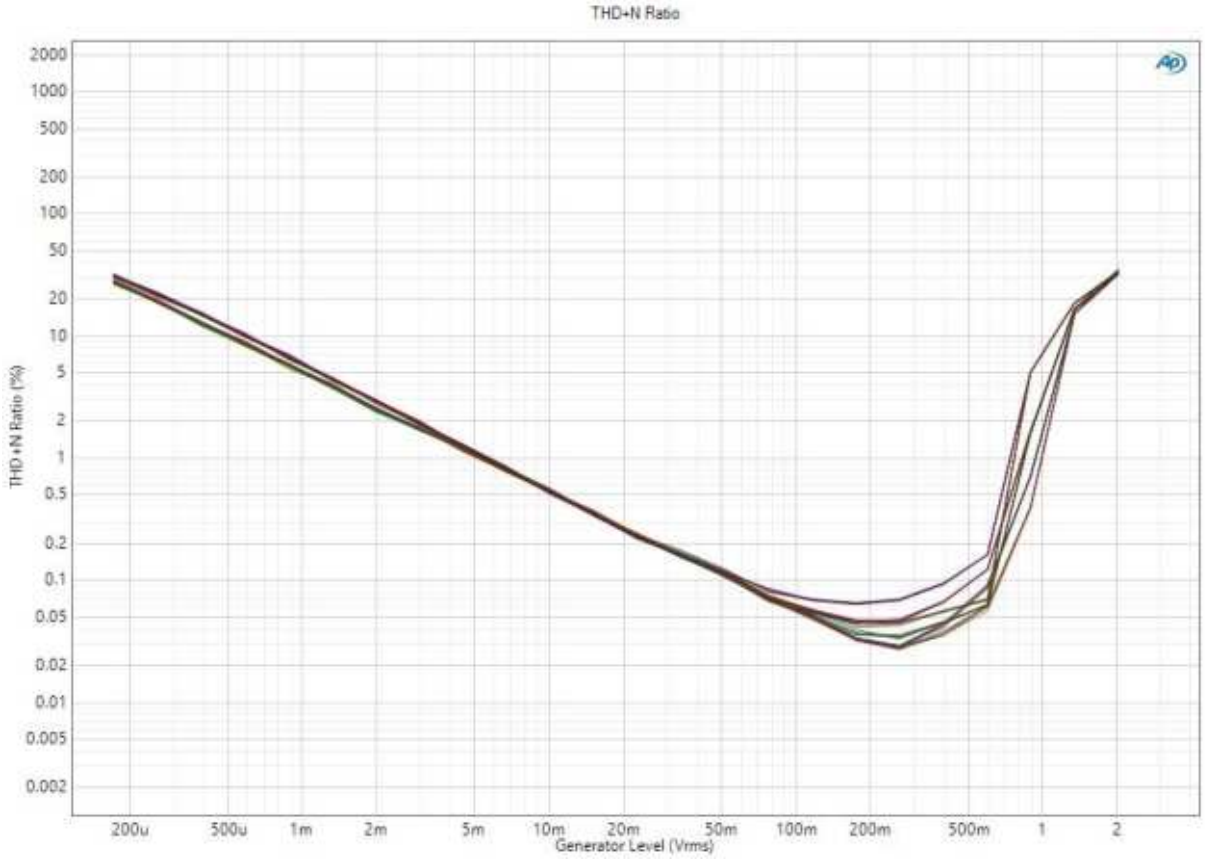

Figure 3-13. THD+N Ratio (dB) Vs. Input Level at Various Loads (Capless Mode)

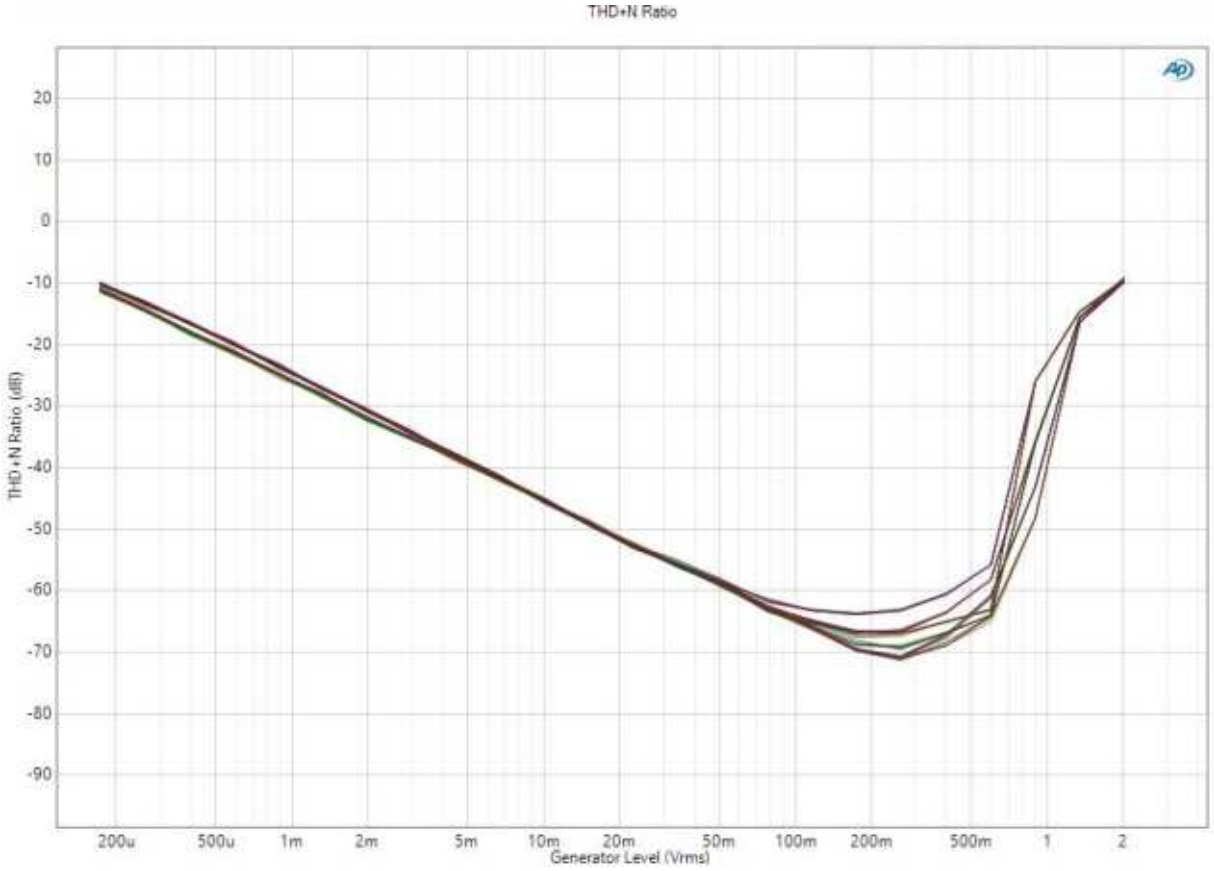

Figure 3-14. THD+N Ratio (%) Vs. Input Level at Various Loads (Single-ended mode)

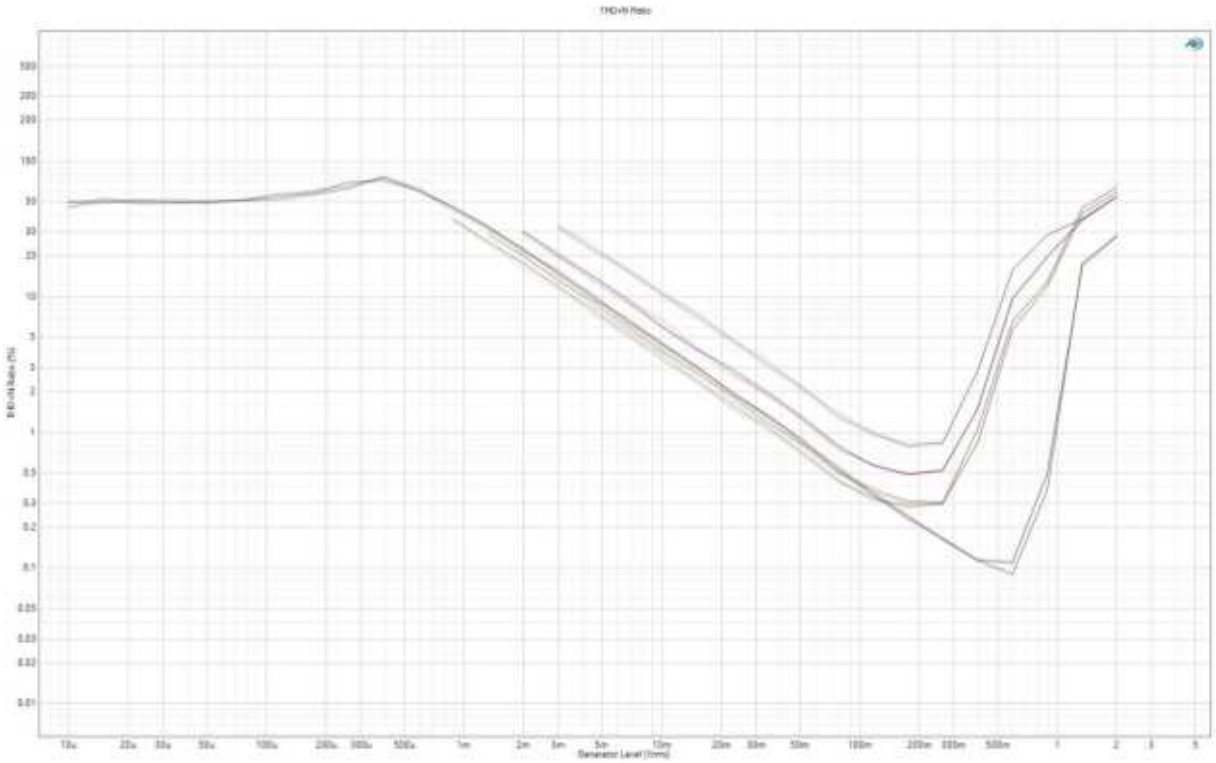

Figure 3-15. THD+N Ratio (dB) Vs. Input Level at Various Loads (Single-ended mode)

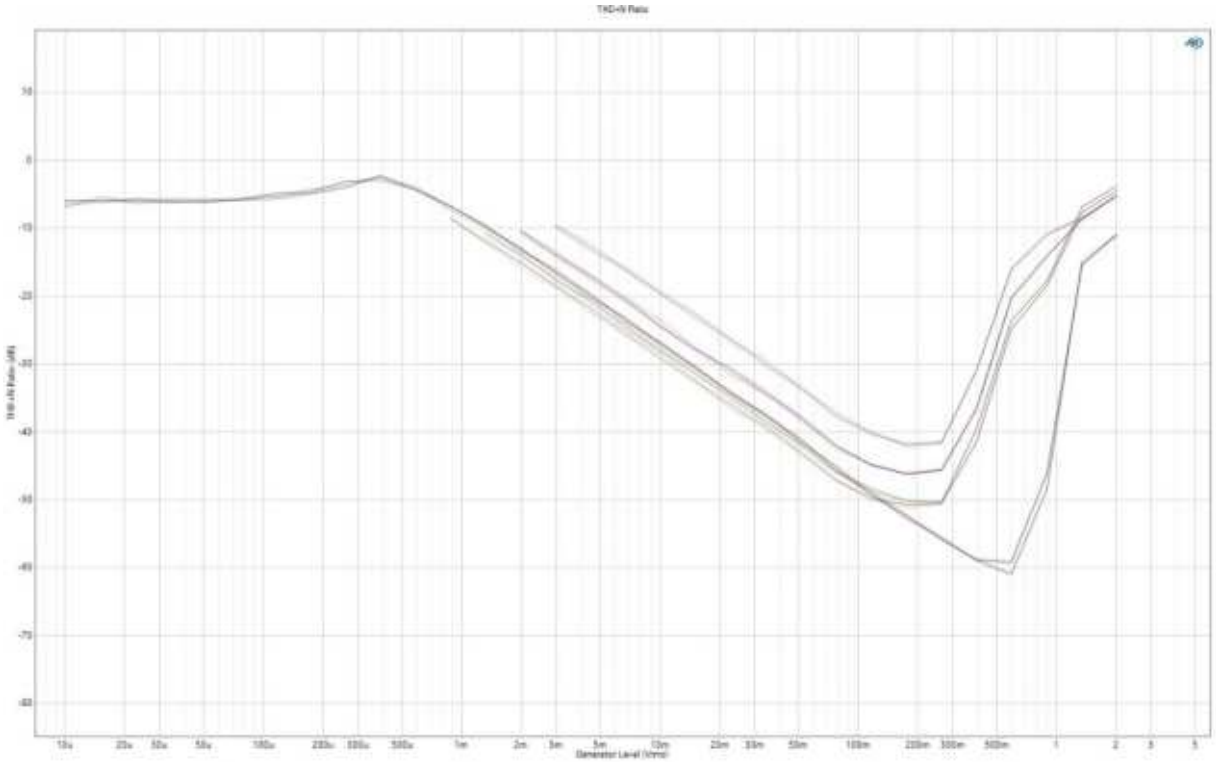

Figure 3-16. THD+N Ratio (%) Vs. Output Level at Various Loads (Capless Mode)

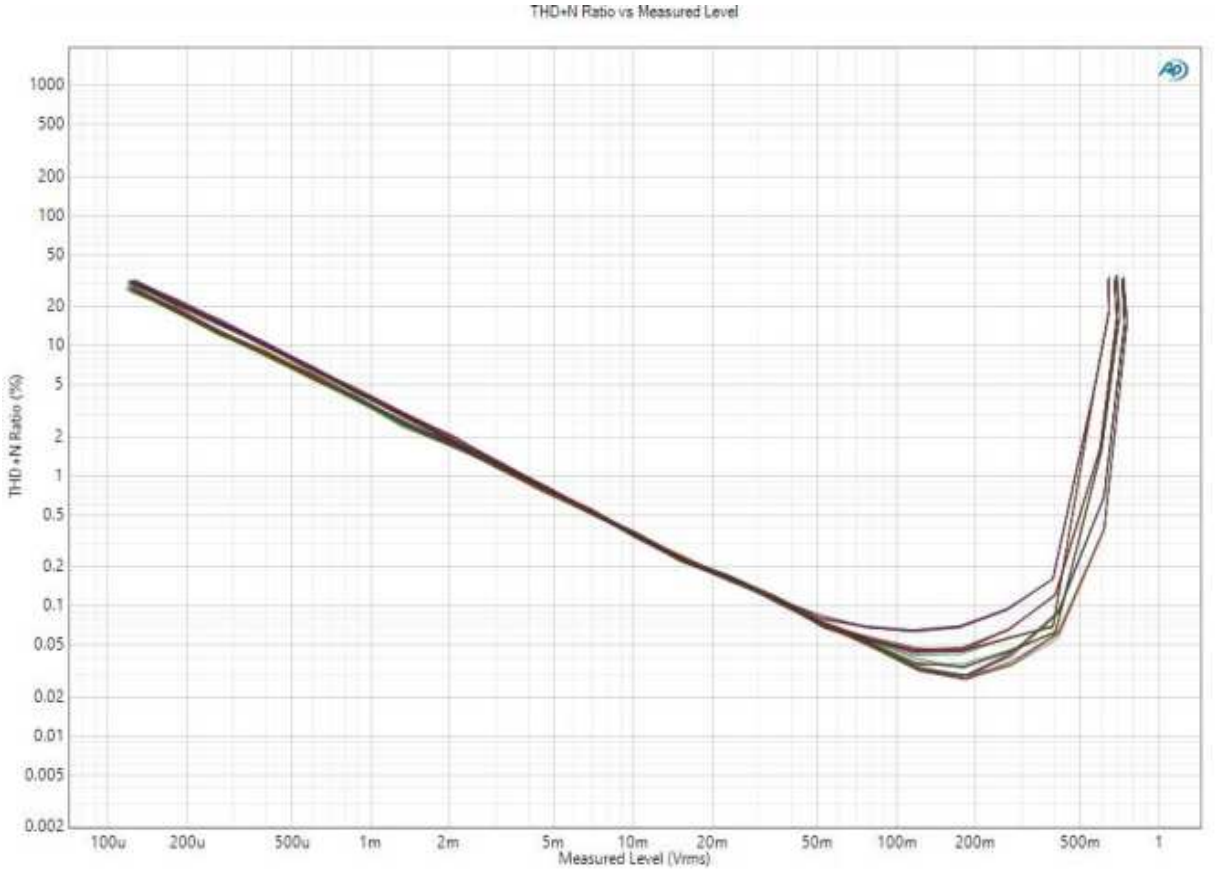

Figure 3-17. THD+N Ratio (dB) Vs. Output Level at Various Loads (Capless Mode)

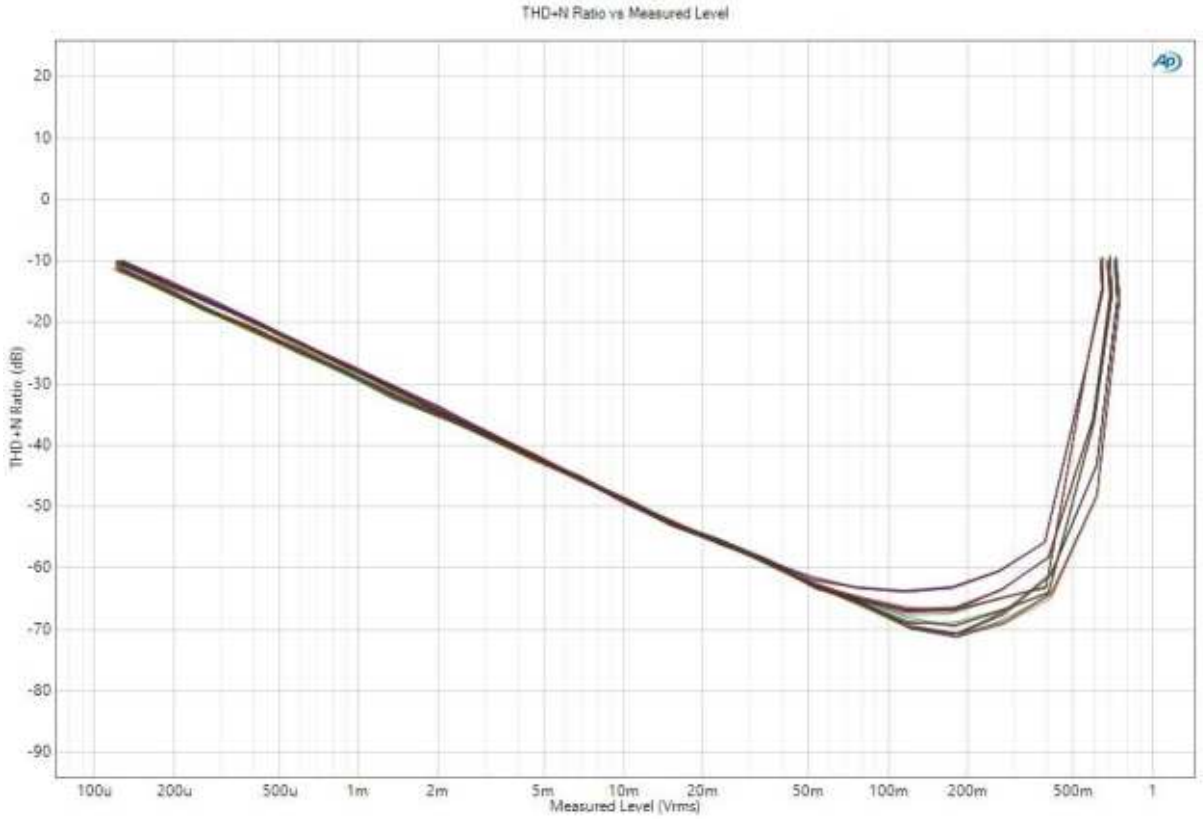

Figure 3-18. THD+N Ratio (%) Vs. Output Level at Various Loads (Single-ended mode)

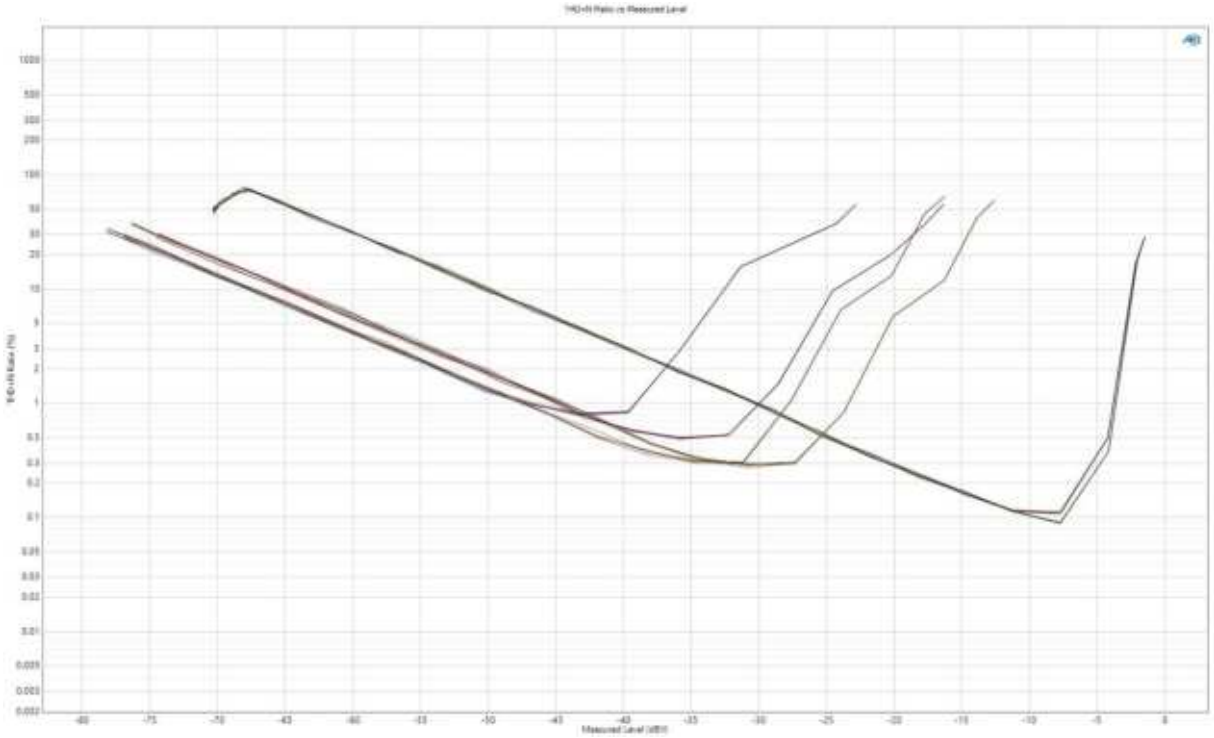

Figure 3-19. THD+N Ratio (dB) Vs. Output Level at Various Loads (Single-ended mode)

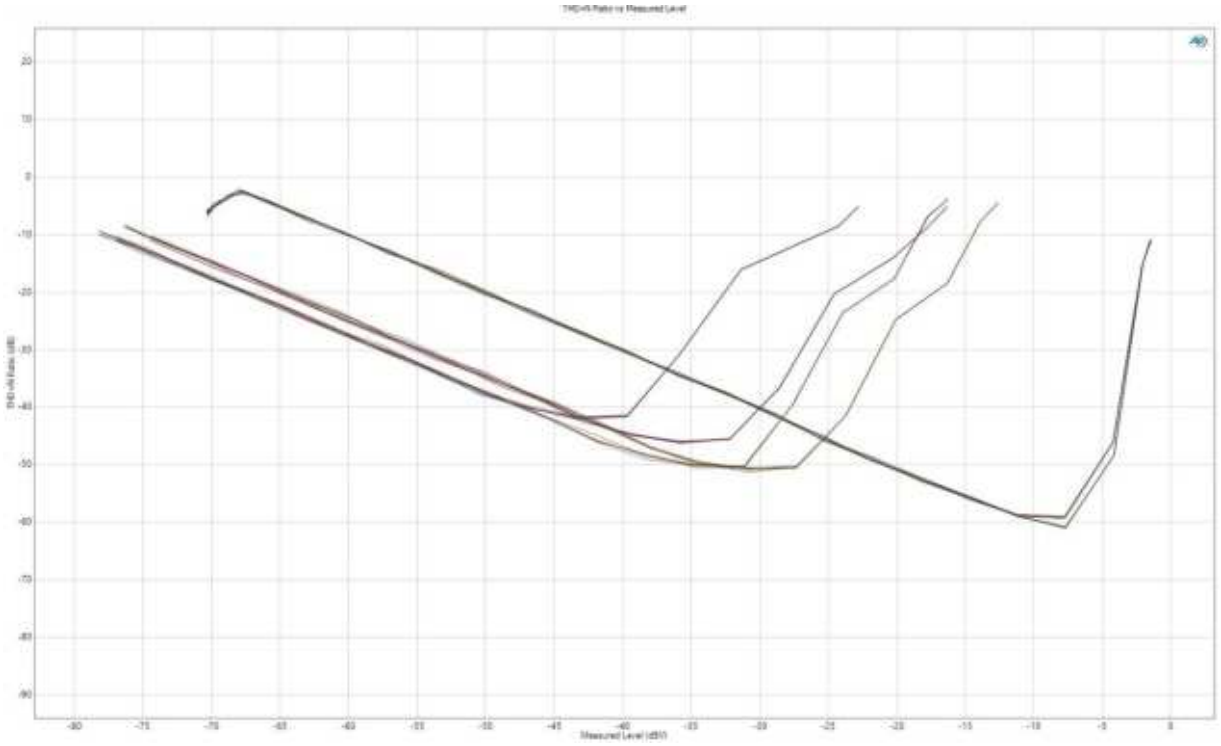

3.2.2 ADC Performance

The audio graphs in this section were produced in the following conditions:

- At room temperature
- Using BM83 EVB platform with BM83 module mounted on BM83 Carrier Board
- Input signal = 1 kHz sine tone, level sweep across -100 dBv to 6 dBv, frequency sweep across 20 Hz to 20 kHz at 1 Fs input level
- Analog gain = -3 dB; digital gain = 0 dB
- A-weighting applied, 22K bandwidth

The following figures illustrate the ADC performance.

Figure 3-20. Gain Vs. Input Level

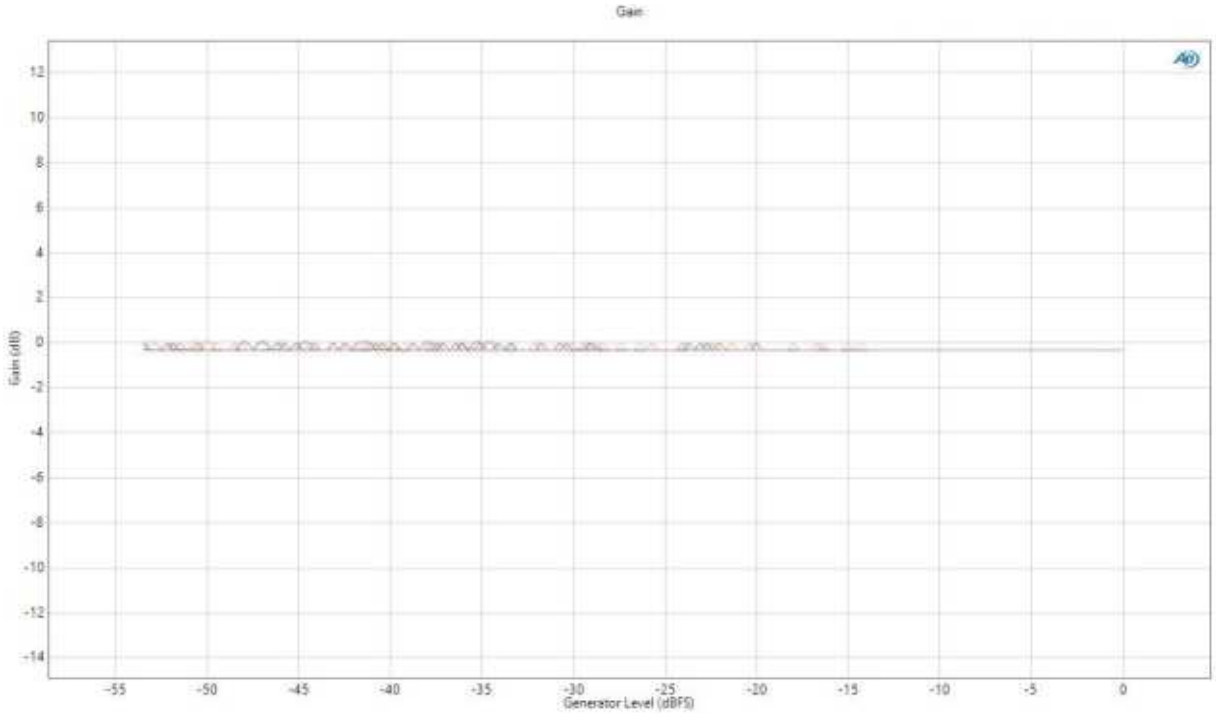

Figure 3-21. Gain Vs. Frequency

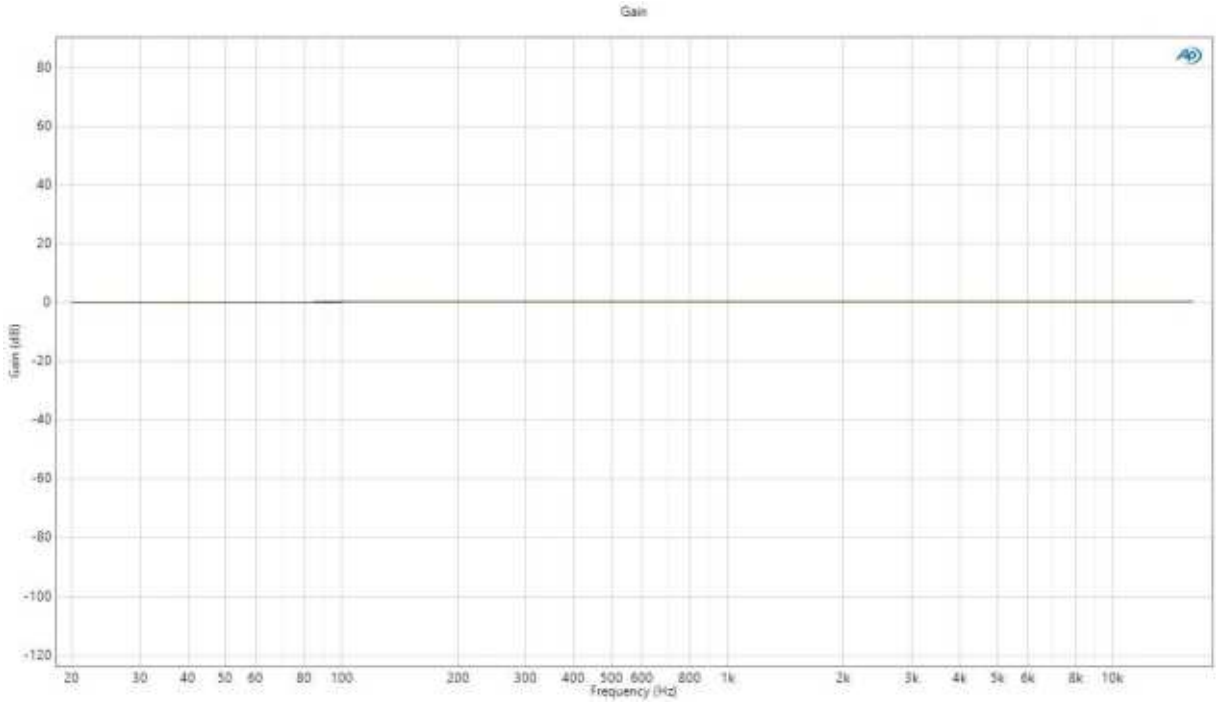

Figure 3-22. Output Level Vs. Input Level

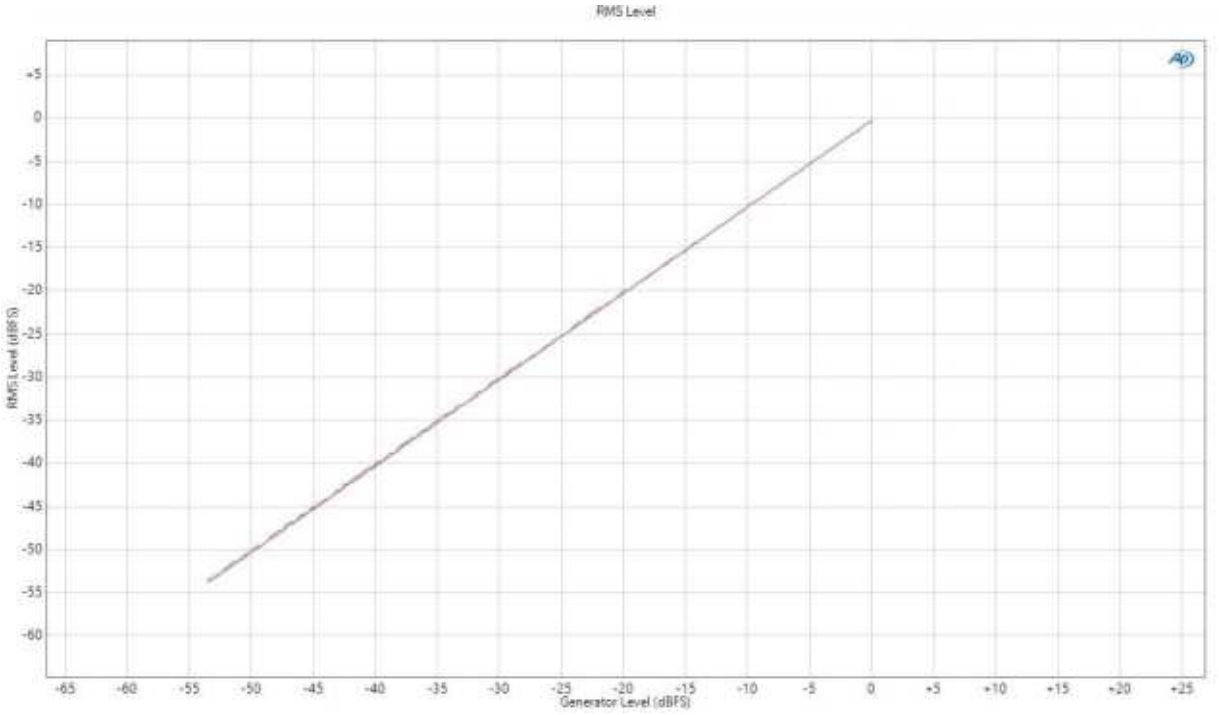

Figure 3-23. Level Vs. Frequency

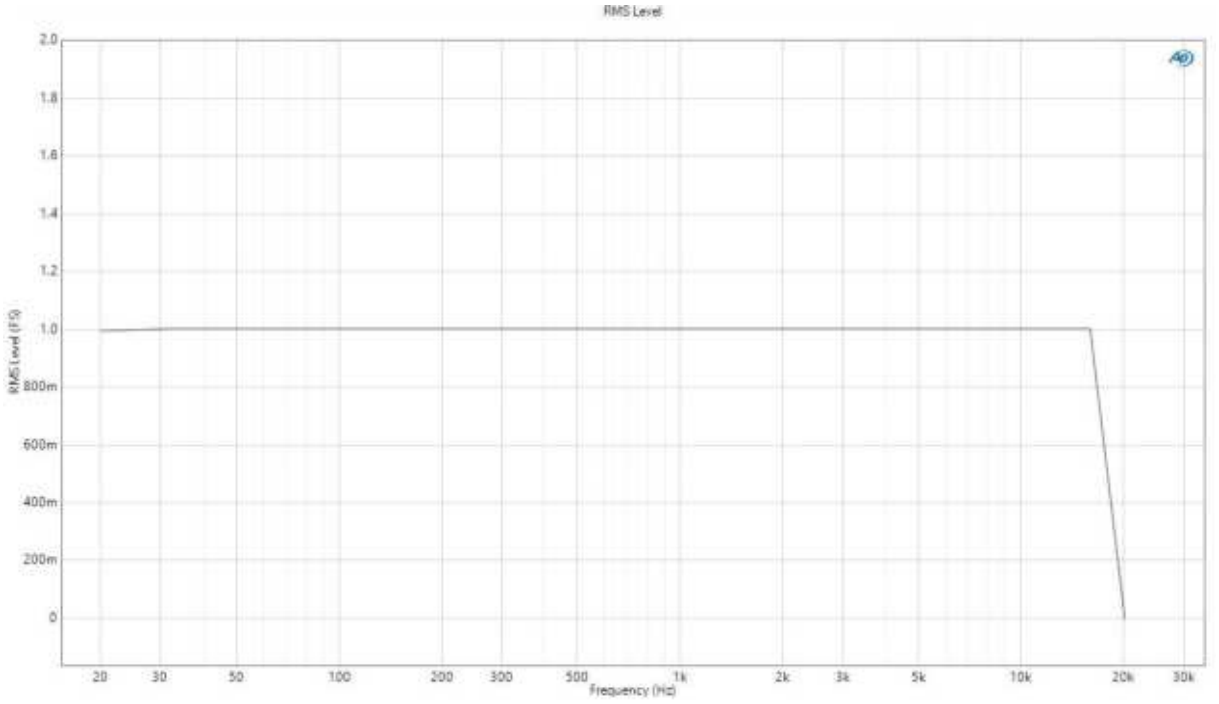

Figure 3-24. THD+N Ratio (%) Vs. Input Level

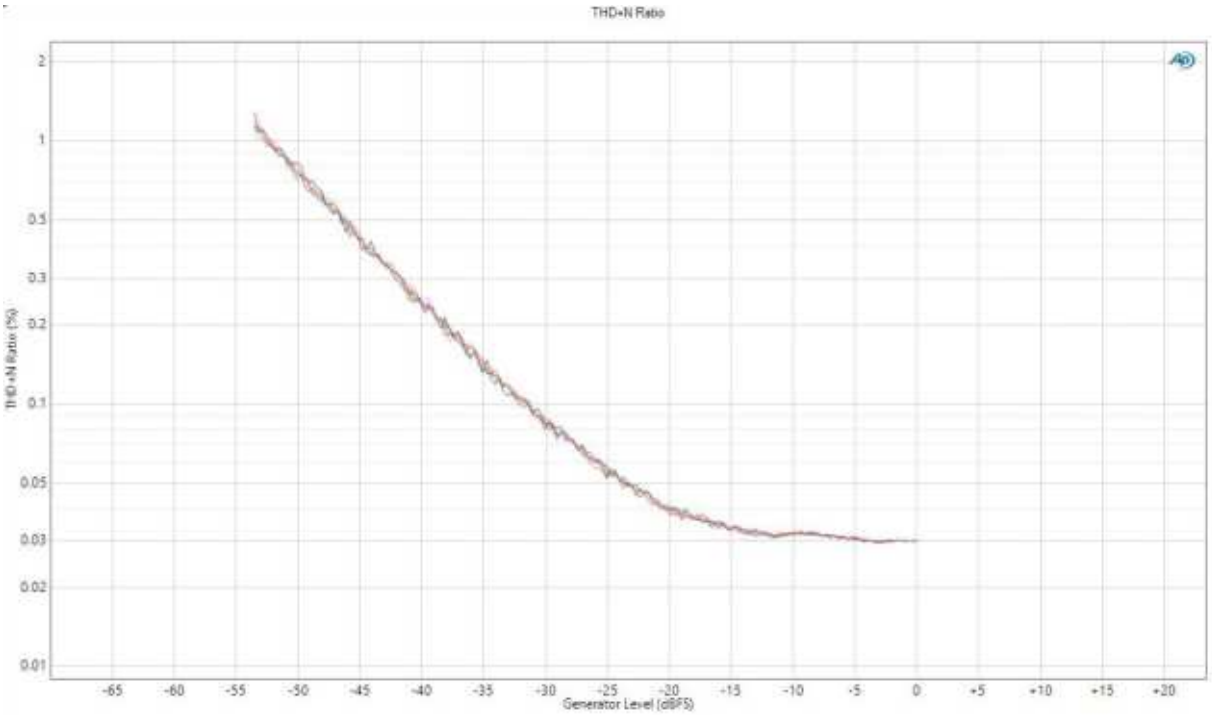

Figure 3-25. THD+N Ratio (dB) Vs. Input Level

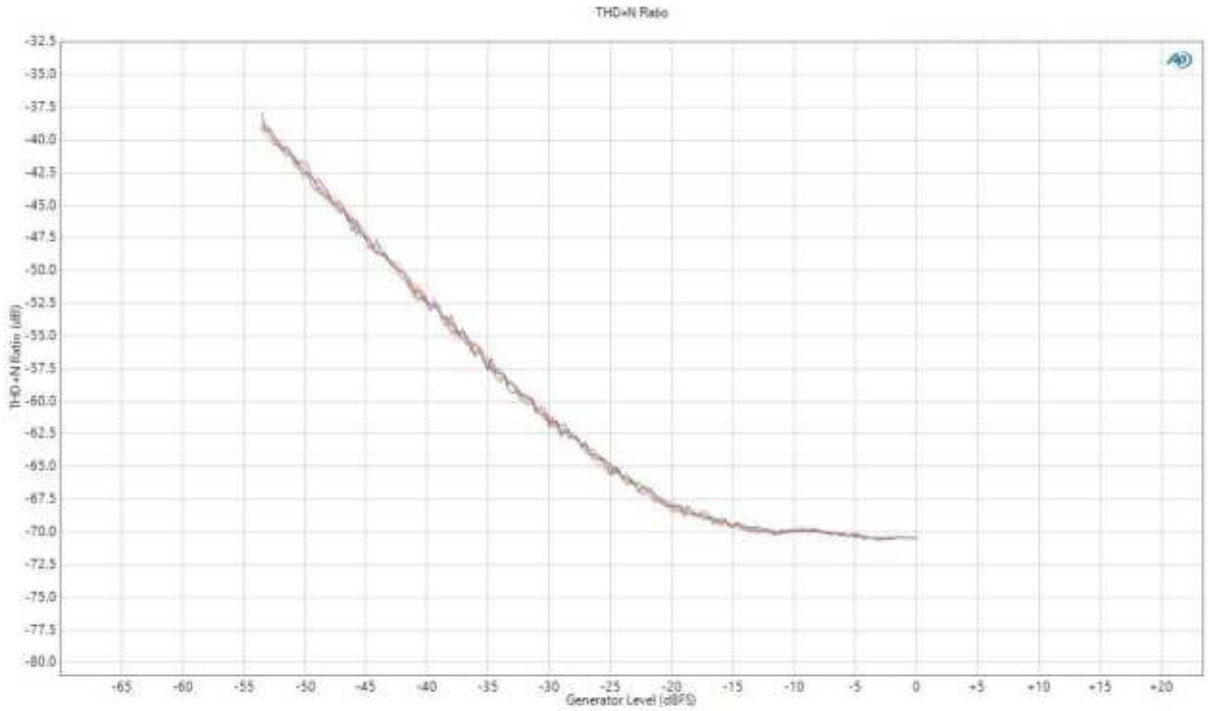

Figure 3-26. THD+N Ratio (%) Vs. Output Level

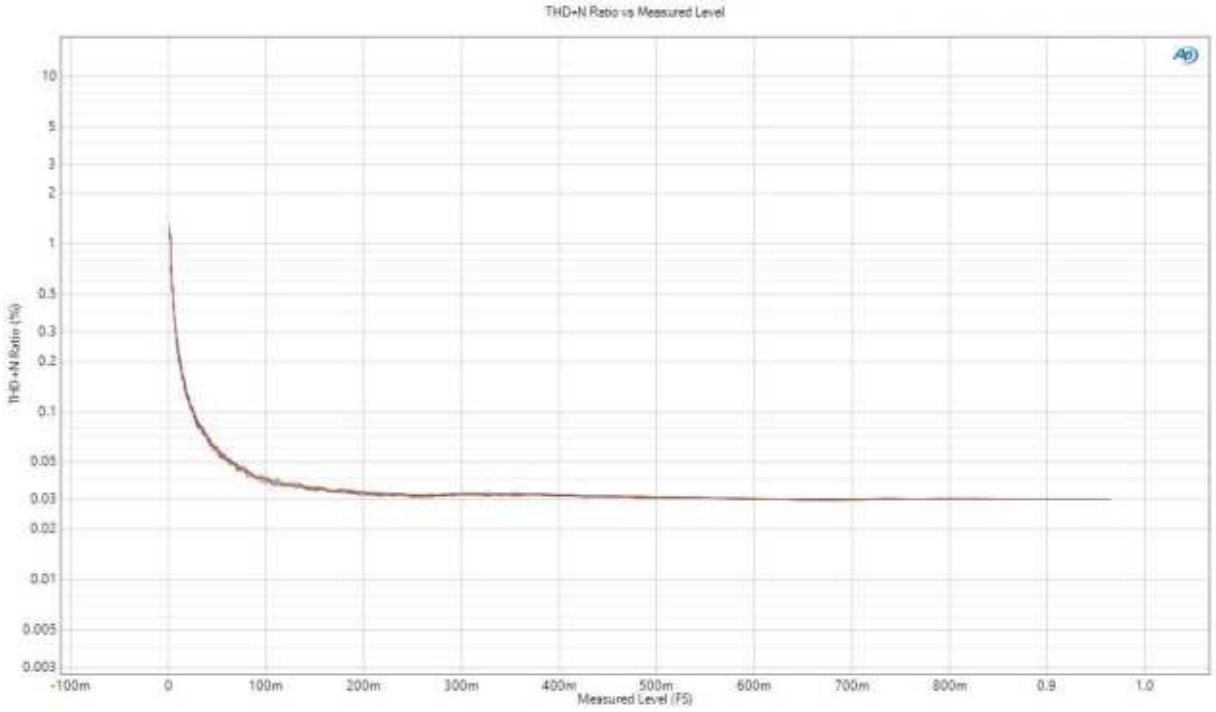

Figure 3-27. THD+N Ratio (dB) Vs. Output Level

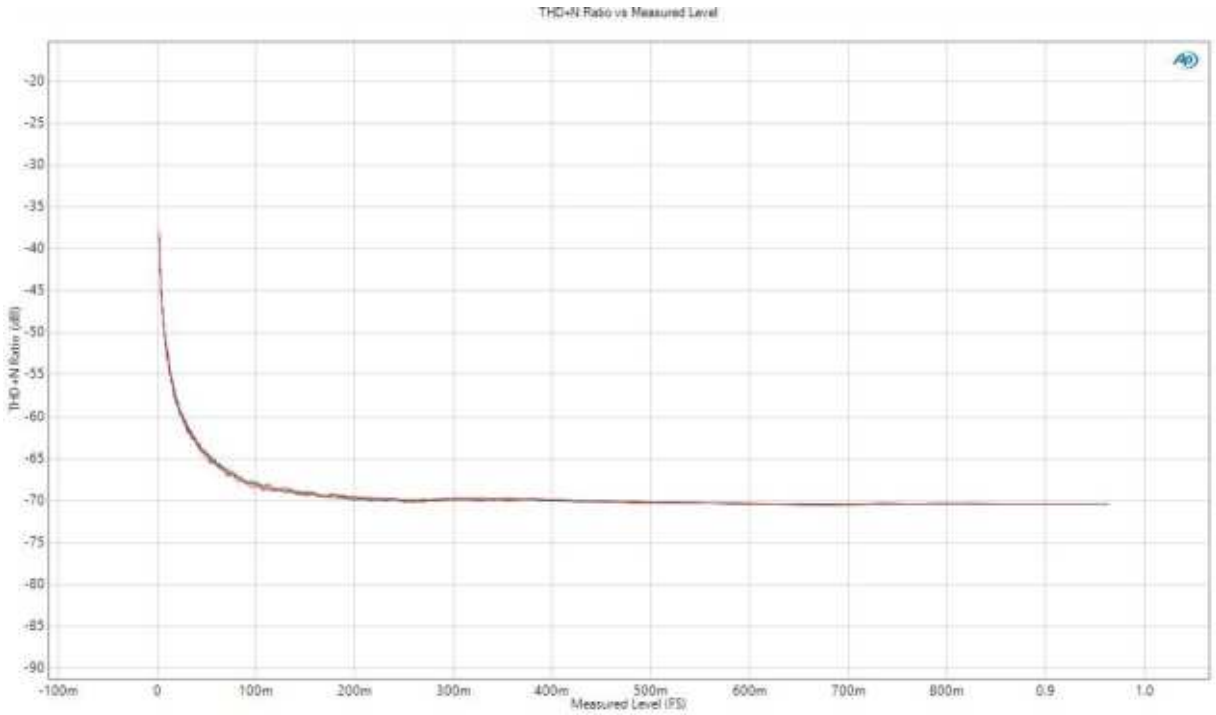

Figure 3-28. THD+N Ratio (%) Vs. Frequency

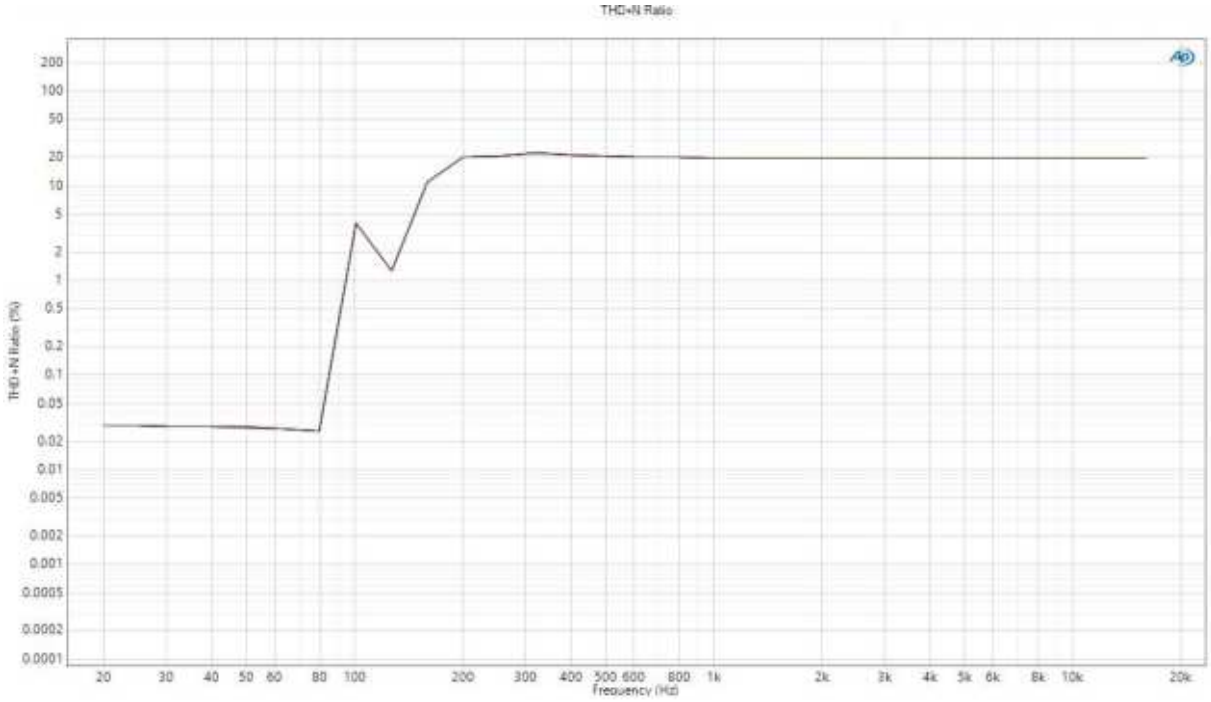

Figure 3-29. THD+N Ratio (dB) Vs. Frequency

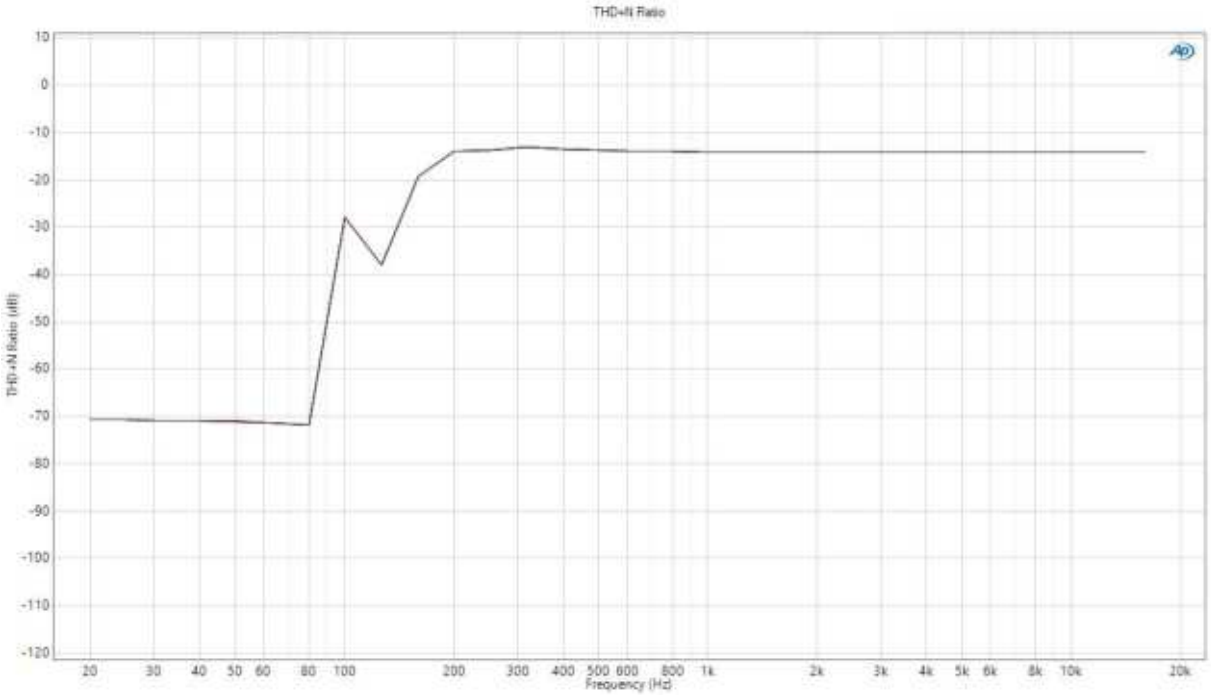

3.3 Auxiliary Port

The BM83 module supports one analog (Line-In, also called as Aux-In) signal from the external audio source. The analog (Line-In) signal can be processed by the DSP to generate different sound effects (MB-DRC and AW), which can be configured by using the Config Tool.

3.4 Analog Speaker Output

The BM83 module supports the following analog speaker output modes:

- Capless mode – recommended for headphone applications in which capless output connection helps to save the Bill of Materials (BOM) cost by avoiding a large DC blocking capacitor. The following figure illustrates the analog speaker output in Capless mode.

  Figure 3-30. Analog Speaker Output - Capless Mode

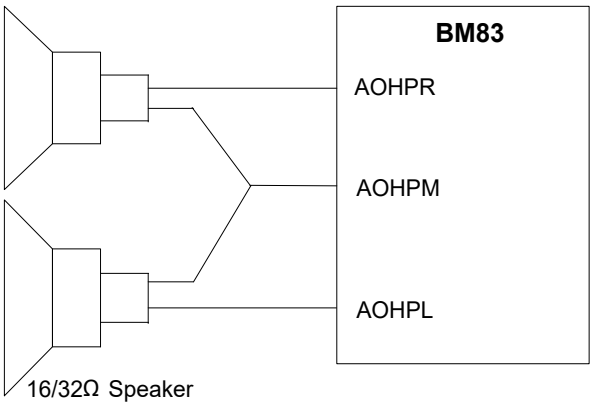

- Single-Ended mode – used for driving an external audio amplifier where a DC blocking capacitor is required. The following figure illustrates the analog speaker output in Single-Ended mode.

  Figure 3-31. Analog Speaker Output - Single-Ended Mode

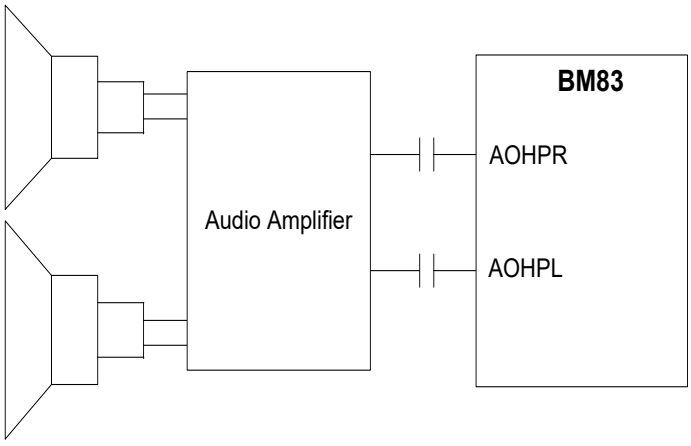

3.5 Microphone Inputs

The BM83 module supports up to two analog microphone channels and one stereo digital microphone. The digital microphone interface should only be used for Pulse Density Modulation (PDM) digital microphones (typically, MEMS microphones) up to about 4 MHz of clock frequency.

Note: An I^2S based digital microphone should use the external I^2S port.

Note: To avoid saturation in the PDM digital microphone path, Microchip recommends limiting the PDM maximum input level to -6 dBFS.

4. Bluetooth Transceiver

The BM83 module is designed and optimized for the Bluetooth 2.4 GHz system. It contains a complete RF Transmitter (TX)/Receiver (RX) section. An internal synthesizer generates a stable clock for synchronizing with another device.

4.1 Transmitter

The IS2083BM device has an internal Medium Power Amplifier (MPA) and a Low Power Amplifier (LPA). The MPA supports up to +11 dBm output power for Bluetooth Class1 applications, and the LPA supports +1 dBm output power for the Class 2 applications. The transmitter performs the I/Q conversion to minimize the frequency drift.

4.2 Receiver

- The Low-Noise Amplifier (LNA) operates with TR-Combined mode with LPA for single port application. It removes the need for an external TX/RX switch.
- The ADC is used to sample the input analog signal and convert it into a digital signal for demodulator analysis. A channel filter has been integrated into the receiver channel before the ADC, which is used to reduce the external component count and increase the anti-interference capability.
- The image rejection filter is used to reject the image frequency for low-Intermediate Frequency (IF) architecture and to reduce external Band Pass Filter (BPF) component for a super heterodyne architecture.
- Received Signal Strength Indicator (RSSI) signal feedback to the processor is used to control the RF output power to make a good trade-off for effective distance and current consumption.

4.3 Synthesizer

A synthesizer generates a clock for radio transceiver operation. There is a Voltage-Controlled Oscillator (VCO) inside with a tunable internal LC tank that can reduce variation for components. A crystal oscillator with an internal digital trimming circuit provides a stable clock for the synthesizer.

4.4 Modulator-Demodulator

- For Bluetooth 1.2 specification and below, 1 Mbps is the standard data rate based on the Gaussian Frequency Shift Keying (GFSK) modulation scheme. This BR modem meets BDR requirements of Bluetooth 2.0 with EDR specifications.
- For Bluetooth 2.0 and above specifications, EDR is introduced to provide the data rates of 1/2/3 Mbps.
- For baseband, both BDR and EDR utilize the same 1 MHz symbol rate and 1.6 kHz slot rate.
- For BDR, symbol 1 represents 1-bit. However, each symbol in the payload part of EDR packet represents 2/3 bits. This is achieved by using two different modulations – π/4 Differential Quadrature Phase Shift Keying (DQPSK) and 8-Differential Phase Shift Keying (DPSK).

4.5 Adaptive Frequency Hopping

The BM83 module has an AFH function to avoid RF interference. It has an algorithm to check the nearby interference and to choose clear channel for transceiver Bluetooth signal.

5. Power Management Unit

The on-chip PMU integrates the battery (lithium-ion and lithium-polymer) charger, and voltage regulator. A power switch is used to switch over the power source between the battery (BAT_IN) and an adapter (ADAP_IN). The PMU provides current to drive two LEDs.

The battery charger supports various modes with features listed below:

- Charging control using current sensor
- User-programmable current regulation
- High accuracy voltage regulation
- Constant current and constant voltage modes
- Stop charging and re-charging modes

The following figure illustrates the charging curve of a battery.

Figure 5-1. Battery Charging Curve

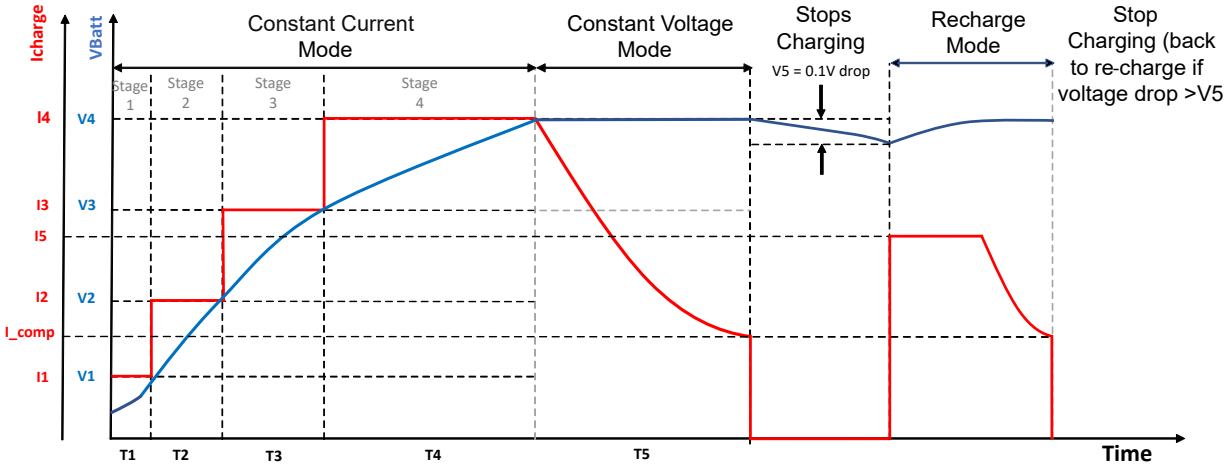

Note: For more details on battery charger configuration, refer to the *IS2083/BM83 Battery Charger Application Note (AN3490)*.

5.1 Power Supply

The BM83 module is powered through the BAT_IN input pin. The following figure illustrates the connection from the BAT_IN pin to various other voltage supply pins of the IS2083BM SoC on the BM83 module. The external 5V power adapter can be connected to ADAP_IN in order to charge the battery in battery powered applications or in USB applications. Otherwise the ADAP_IN pin can be left floating if there is no battery utilized at BAT_IN pin.

Figure 5-2. Power Tree Diagram

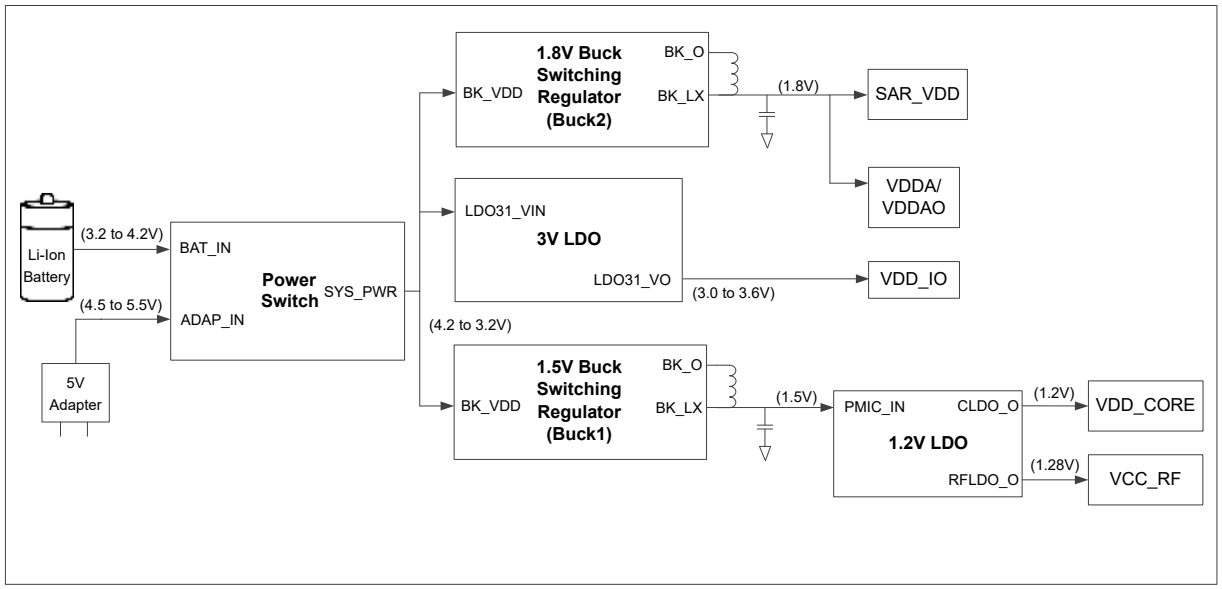

5.2 SAR ADC

The BM83 module has a 10-bit Successive Approximation Register (SAR) ADC with ENOB (Effective Number of Bits) of 8-bits; used for battery voltage detection, adapter voltage detection, charger thermal protection, and ambient temperature detection. The input power of the SAR ADC is supplied by the 1.8V output of Buck2. The warning level can be programmed by using the Config Tool or the SDK.

The SK1 and SK2 are the ADC channel pins. The SK1 is used for charger thermal protection. The following figure illustrates the suggested circuit and thermistor, Murata NCP15WF104F. The charger thermal protection can avoid battery charge in a restricted temperature range. The upper and lower limits for temperature values can be configured by using the Config Tool.

Figure 5-3. Ambient Detection Circuit

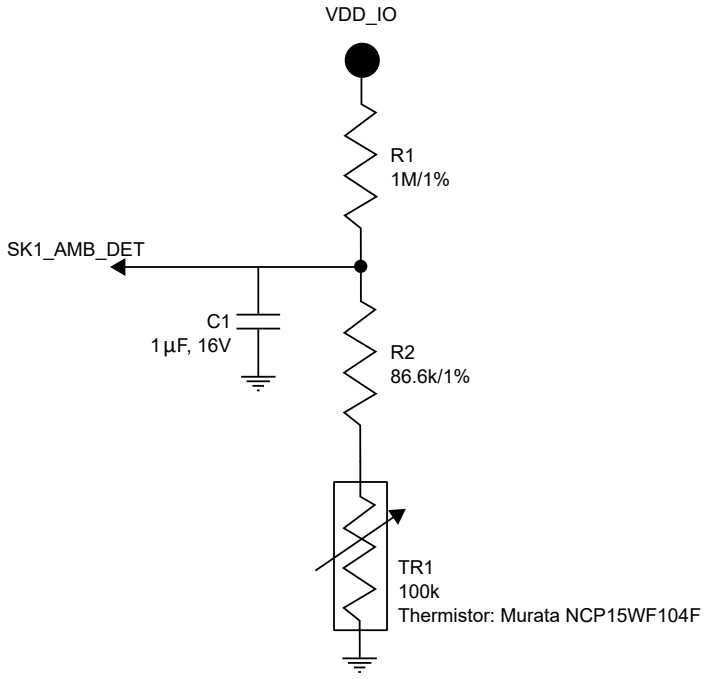

Note: The thermistor must be placed close to the battery in the user application for accurate temperature measurements and to enable the thermal shutdown feature.

The following figures show SK1 and SK2 channel behavior.

Figure 5-4. SK1 Channel

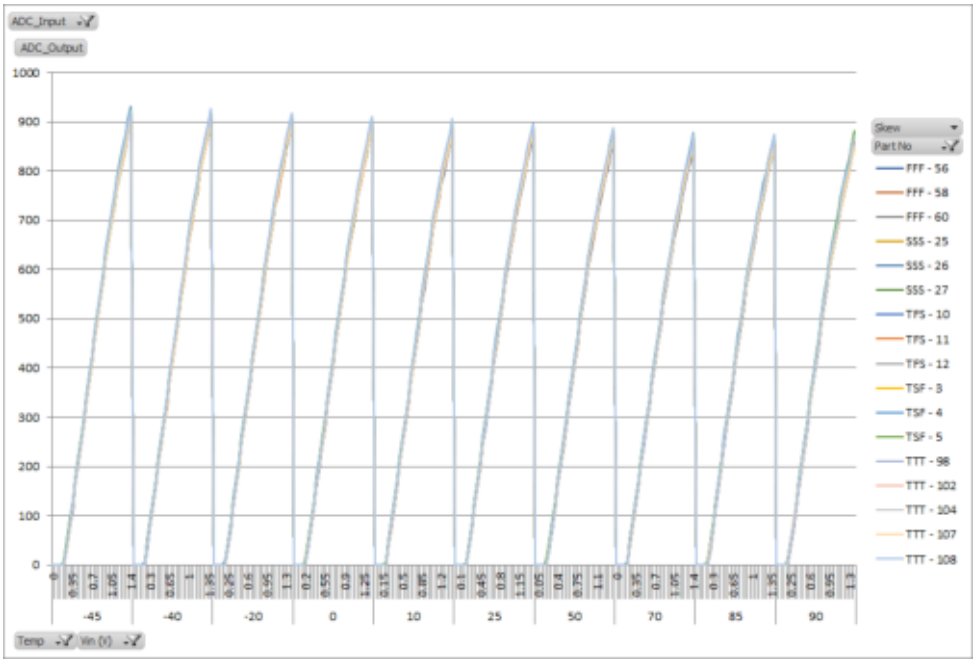

Figure 5-5. SK2 Channel

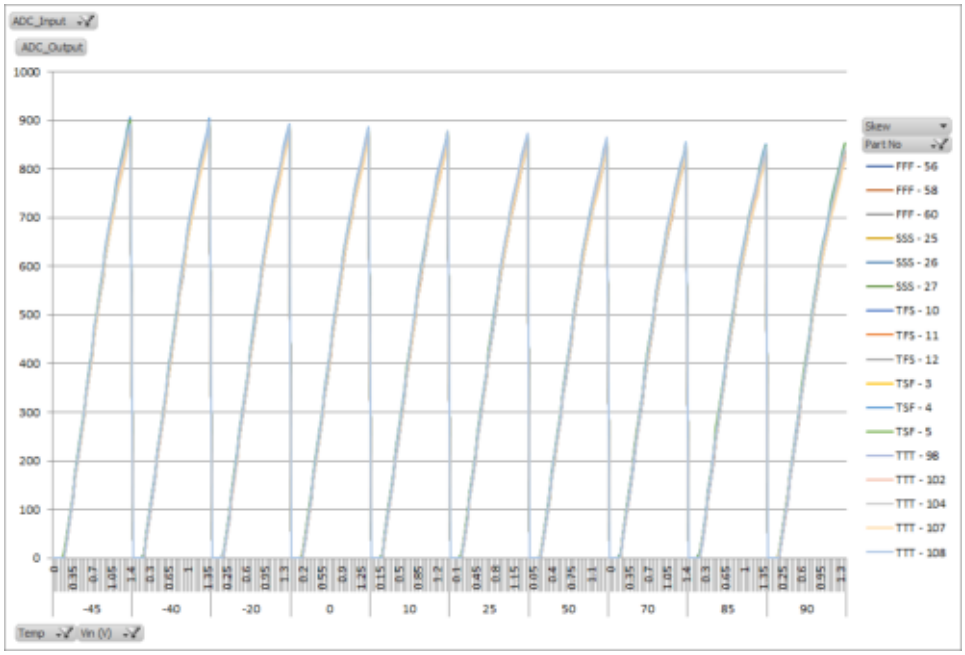

5.3 LED Drivers

The BM83 module has two LED drivers to control external LEDs. The LED drivers provide enough sink current (16-step control and 0.35 mA for each step) and the LED can be connected directly to the BM83 module. The LED settings can be configured by using the Config Tool.

The following figure illustrates the LED drivers in the BM83 module.

Figure 5-6. LED Drivers

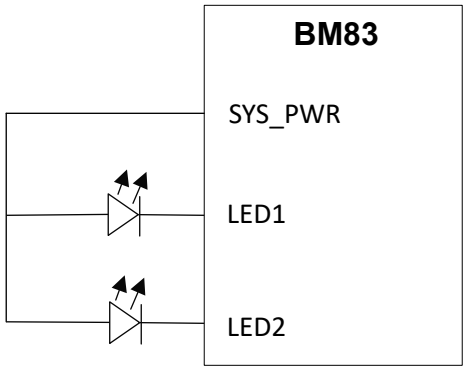

6. Application Information

6.1 Power On/Off Sequence

In Embedded mode, the MFB button is used to turn on and turn off the system. For Host mode, refer to 6.6 Host MCU Interface Over UART. The following figure illustrates the system behavior (Embedded mode) upon a MFB press event to turn on and turn off the system.

Figure 6-1. Timing Sequence of Power On/Off in Embedded Mode

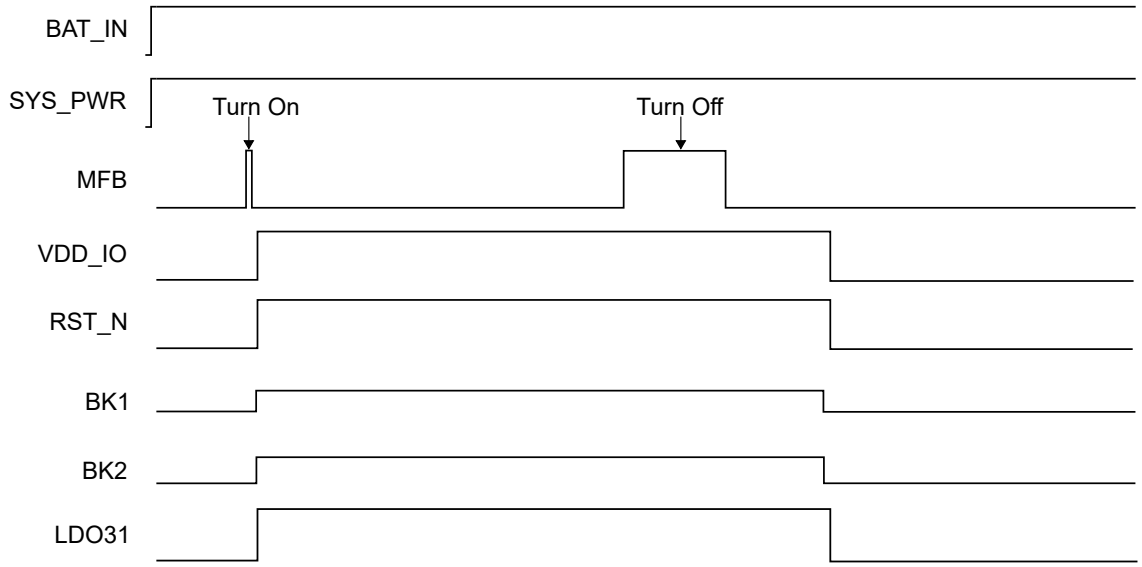

The following figure illustrates the system behavior (Embedded mode) upon a MFB press event to turn on the system and then trigger a Reset event.

Figure 6-2. Timing Sequence of Power On and Reset Trigger in Embedded Mode

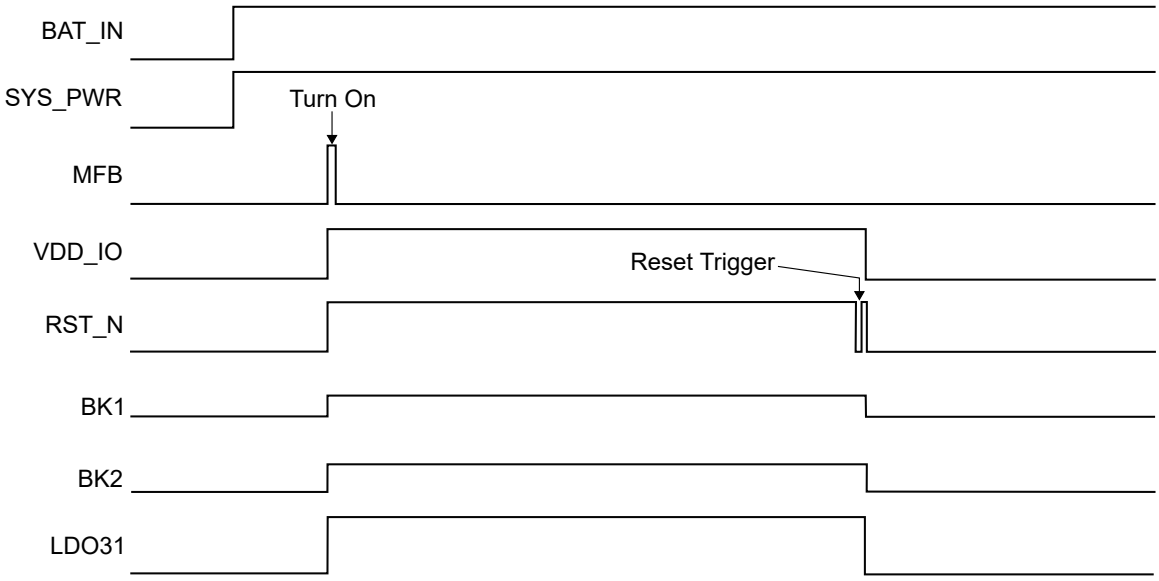

6.2 Reset

The Reset logic generates proper sequence to the device during Reset events. The Reset sources include external Reset, power-up Reset, and Watchdog Timer (WDT). The IS2083 SoC provides a WDT to Reset the chip. In addition, it has an integrated Power-on Reset (POR) circuit that resets all circuits to a known Power On state. This action can also be driven by an external Reset signal, which is used to control the device externally by forcing it into a POR state. The following figure illustrates the system behavior upon a RST_N event.

Note: The Reset (RST_N) is an active-low signal and can be utilized based on the application needs, otherwise, it can be left floating.

Figure 6-3. Timing Sequence of Reset Trigger

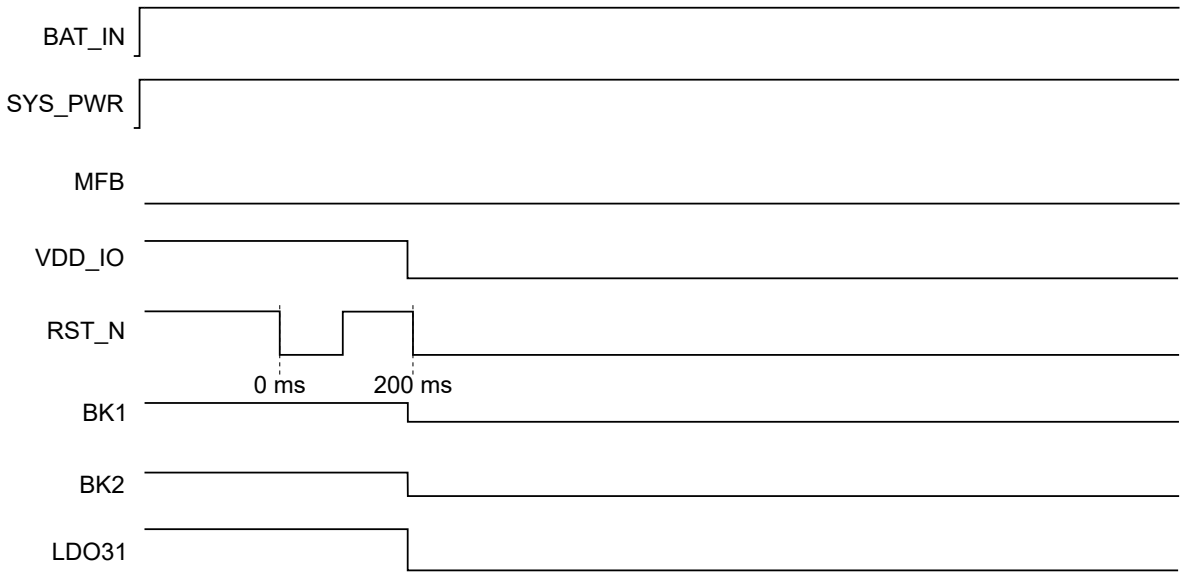

Note: RST_N pin has an internal pull-up, thus, RST_N signal will transition to high again upon releasing the RST_N button. This is an expected behavior of RST_N signal.

Figure 6-4. Timing Sequence of Power Drop Protection

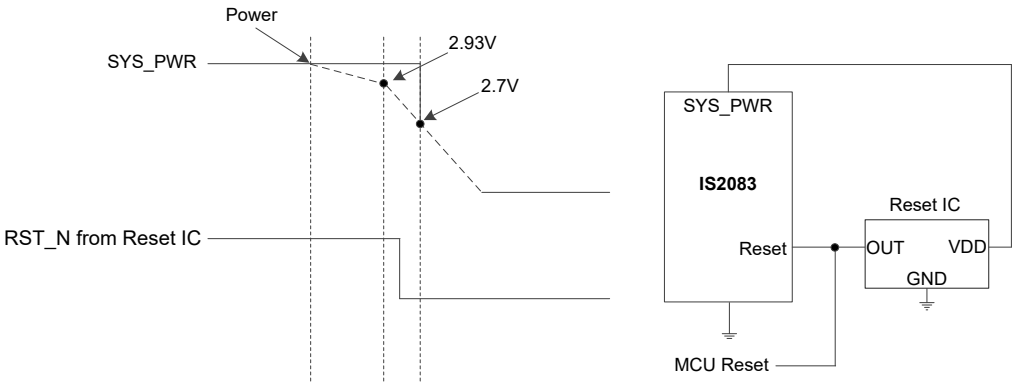

Timing sequence of power drop protection:

- It is recommended to use the battery to provide the power supply at BAT_IN.
- If an external power source or a power adapter is utilized to provide power to BAT_IN, it is recommended to use a voltage supervisor Integrated Circuit (IC).
- The Reset IC output pin, RST_N, must be open drain type and threshold voltage as 2.93V.
- The RST_N signal must be fully pulled low before SYS_PWR power drop to 2.7V.

6.3 Configuring and Programming

6.3.1 Test Mode

The BM83 module can be configured by using the Config Tool and the firmware is programmed by using the isUpdate tool. The following table provides the settings for configuring the BM83 module for Test mode or Application mode.

Table 6-1. BM83 Module - Test Mode Configuration Settings

Pins	Status	Mode
P3_4	Low	Test mode
	Floating	Application mode

Note: The BM83 module provides Test mode, which allows customers to use existing module manufacturing and testing equipment and flow to test the BM83 modules without reinvesting in new test equipment. New customers are encouraged to use the new RF test modes defined for this device.

Test mode allows an external UART host to communicate with the BM83 using Bluetooth vendor commands over the UART interface. The host can interface with the driver firmware on the BM83 module to perform TX/RX operations and to collect/report Bit Error Rate (BER) and other RF performance parameters. These values can then be used to accept/reject the device and/or calibrate the module.

6.3.2 2-wire JTAG Program and Debug

The BM83 (IS2083BM) provides physical interface for connecting and programming the memory contents, see the following figure. For all the programming interfaces, the target device (IS2083BM) must be powered, and all required signals must be connected. In addition, the interface must be enabled through a special initialization sequence.

Note: For more details on 2-wire prog/debug, refer to the *IS2083 SDK User's Guide* and *IS2083 SDK Debugger User's Guide* .

Figure 6-5. 2-wire In-Circuit Serial Programming (ICSP) Interface

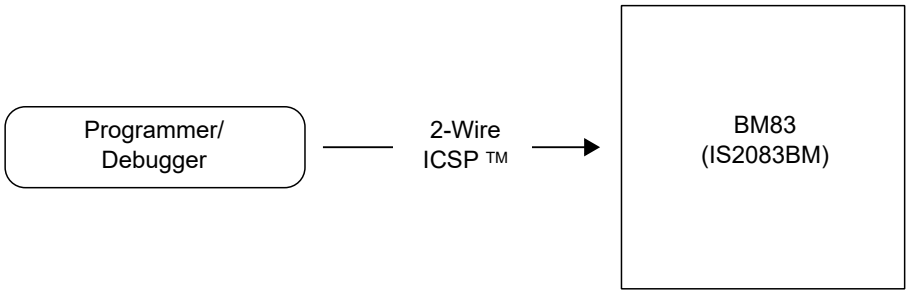

The 2-wire ICSP port can be used to program the memory content. This interface uses the following two communication lines to transfer data to and from the BM83 (IS2083BM) device being programmed:

- Serial Program Clock (TCK_CPU)
- Serial Program Data (TDI_CPU)

These signals are described in the following sections. The following table describes the signals required for the 2-wire ICSP interface.

Table 6-2. 2-wire Interface Pin Description

Pin Name	Pin Type	Description
RST_N	I	Reset pin
VDD_IO, ADAP_IN, BAT_IN	P	Power supply pins

.....continued		
Pin Name	**Pin Type**	**Description**
GND	P	Ground pin
TCK_CPU	I	Primary programming pin pair: Serial Clock
TDI_CPU	I/O	Primary programming pin pair: Serial Data

6.3.2.1 Serial Program Clock (TCK_CPU)

TCK_CPU is the clock that controls the TAP controller update and the shifting of data through the instruction or selected data registers. TCK_CPU is independent of the processor clock, with respect to both frequency and phase.

6.3.2.2 Serial Program Data (TDI_CPU)

TDI_CPU is the data input/output to the instruction or selected data registers and the control signal for the TAP controller. This signal is sampled on the falling edge of TDI_CPU for some TAP controller states.

6.4 General Purpose I/O Pins

The BM83 module provides up to 18 GPIOs that can be configured by using the Config Tool. The following table provides the default I/O functions of the BM83 module.

Note: The MFB pin must be configured as the power On/Off key and the remaining pins are user configurable pins.

Table 6-3. GPIO Assigned Pins Function(1)

Pin Name	Function Assigned
P0_0	External codec reset
P0_1	Forward (FWD) button
P0_2	Play or Pause (PLAY/PAUSE) button
P0_3	Reverse (REV) button
P0_5	Volume decrease (VOL_DN) button
P0_6	Available for user configuration
P0_7	Available for user configuration
P1_2	I^2C SCL (muxed with 2-wire CPU debug data)
P1_3	I^2C SDA (muxed with 2-wire CPU debug clock)
P1_6	PWM
P2_3	Available for user configuration
P2_6	Available for user configuration
P2_7	Volume increase (VOL_UP) button
P3_2	Line-In detect
P3_4	SYS_CFG (muxed with UART_RTS)(2)
P3_7	UART_CTS
P8_5	UART_TXD(3)(4)
P8_6	UART_RXD(3)(4)
MFB	MFB

Notes:

1. This table reflects the default IO assignment for the turn-key solution. The GPIOs are user configurable.
2. GPIO P3_4 is used to enter Test mode during reset. If the user wants to use this pin to control external peripherals, care must be taken to ensure this pin is not pulled LOW and accidentally enters Test mode.
3. Microchip recommends to reserve UART port (P8_5 and P8_6) for Flash download in Test mode during production.
4. Currently, GPIOs ports P8_5 and P8_6 APIs (button detect driver) are not implemented.

6.5 I²S Interface

The BM83 module provides an I²S digital audio input, output or input/output interface to connect with the external codec or DSP. It provides 8, 16, 44.1, 48, 88.2, and 96 kHz sampling rates for 16-bit and 24-bit data formats. The following are the BM83 module interface signals:

- MCLK1 – Master Clock (BM83 output)
- SCLK1– Serial/Bit Clock (BM83 input/output)
- DR1 – Receive Data (BM83 input)
- RFS1 – Receive Frame Sync (BM83 input/output)
- DT1 – Transmit Data (BM83 output)

Note: The I²S parameters can be configured by using the Config Tool.

I²S supports the following modes:

- Master mode
  - The BM83 serves as a master to provide clock and frame synchronous signals for the master/slave data synchronizations, as illustrated in the following figures. The MCLK is optional and is not required if the external I²S device can drive its system clock on its own.

Figure 6-6. BM83 Module in I²S Master Mode

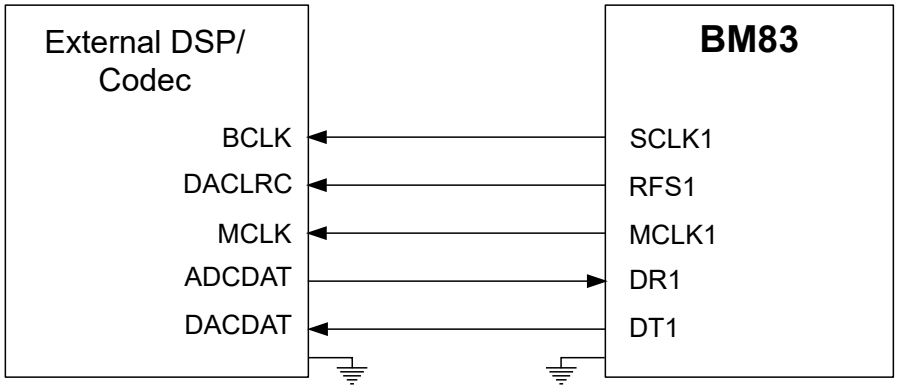

- Slave mode
  - The BM83 serves as a slave to receive clock and frame synchronous signals from the external codec or DSP devices, as illustrated in the following figure.

Figure 6-7. BM83 Module in I²S Slave Mode

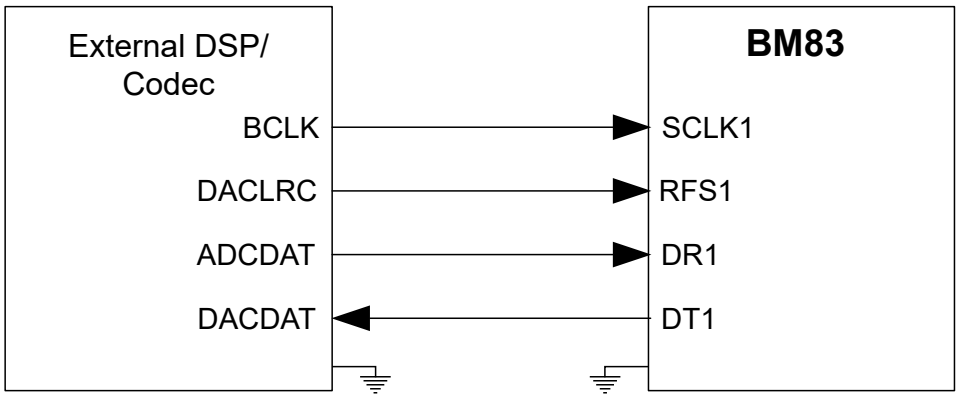

Note: Use the Config Tool to configure the BM83 module as a master/slave.

6.6 Host MCU Interface Over UART

The BM83 module supports UART commands, which enable an external MCU to control the BM83 module. The following figure illustrates the UART interface between the BM83 module and an external MCU. An external MCU can control the BM83 module over the UART interface and wake up the module with the MFB and P0_0 pins.

Refer to *SPKcommandset tool* to get a list of functions supported by the BM83 module and how to use the Config Tool for configuring UART and UART command set tool.

Figure 6-8. Host MCU Interface Over UART

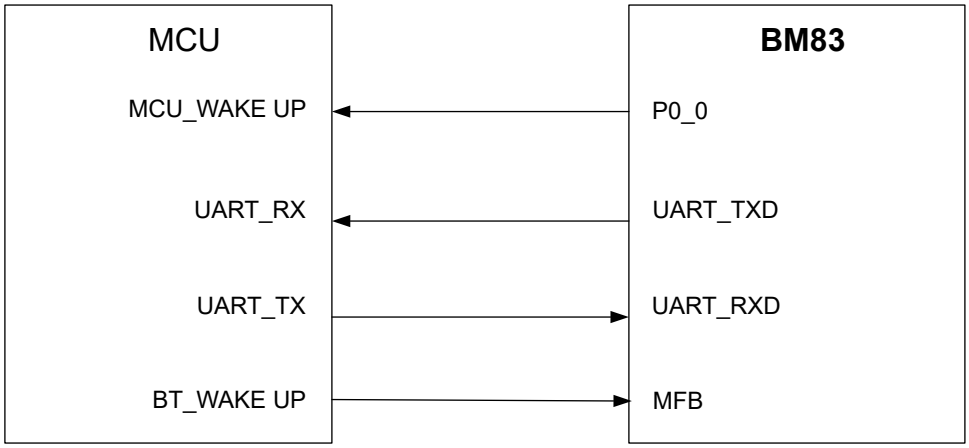

Note: For the latest SPKcommandset tool, refer to www.microchip.com/BM83.

The following figures illustrate the timing sequences of various UART control signals.

Figure 6-9. Timing Sequence of Power On/Off

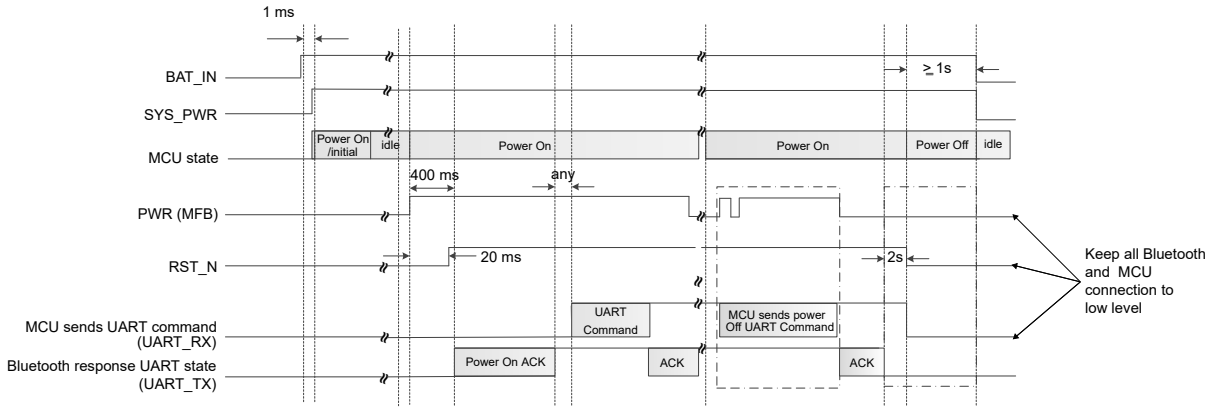

Figure 6-10. Timing Sequence of RX Indication After Power On State

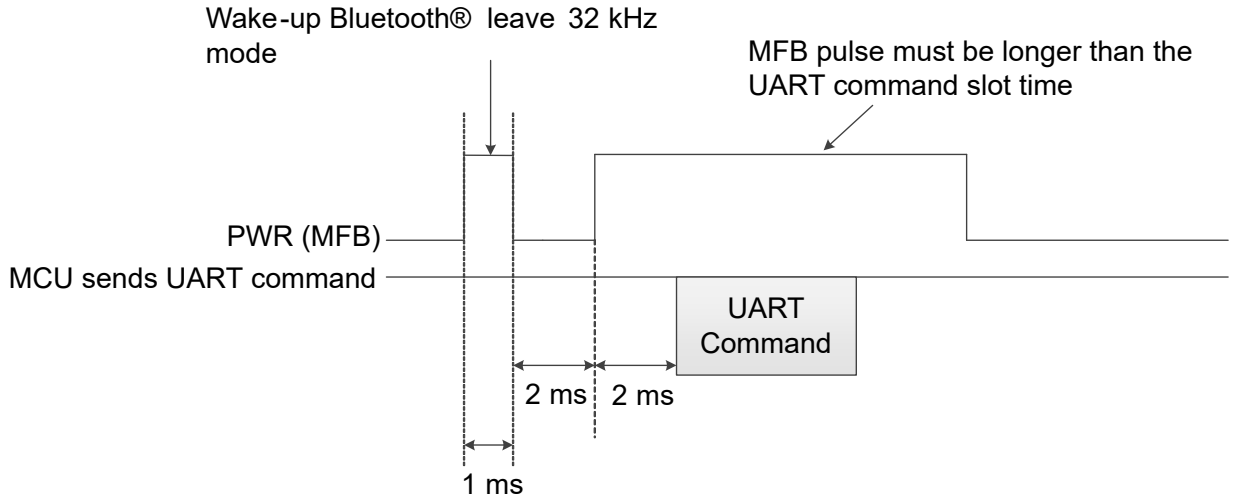

Figure 6-11. Timing Sequence of Power Off State

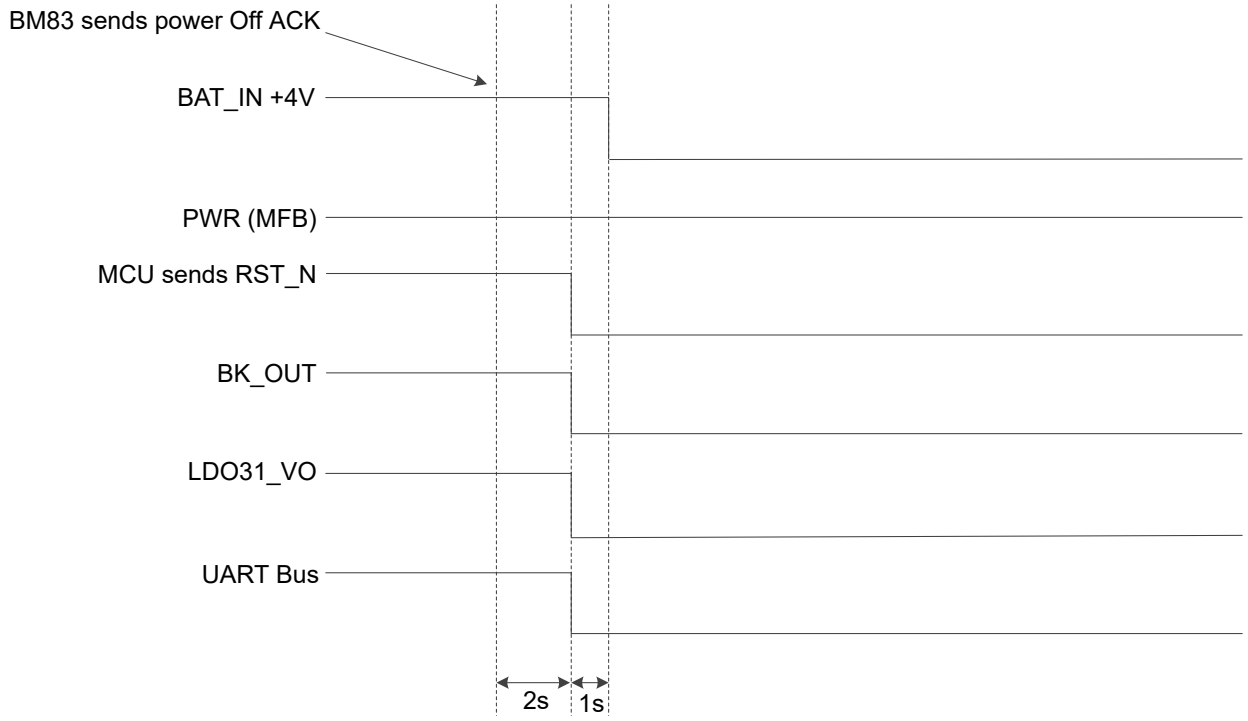

Timing sequence of power Off state:

- For a byte write: 0.01 ms x 32 clock x 2 = 640 µs.
- It is recommended to have ramp-down time more than 640 µs during the power Off sequence to ensure safe operation of the device.

Figure 6-12. Timing Sequence of Power On (NACK)

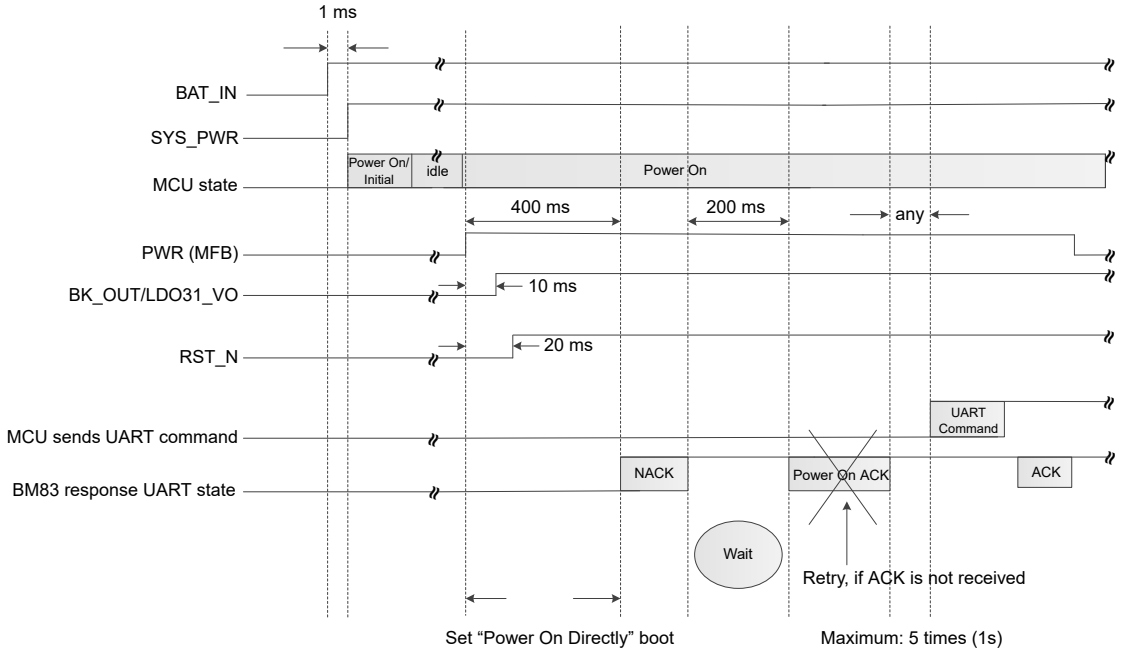

Figure 6-13. Reset Timing Sequence in No Response From Module to Host MCU

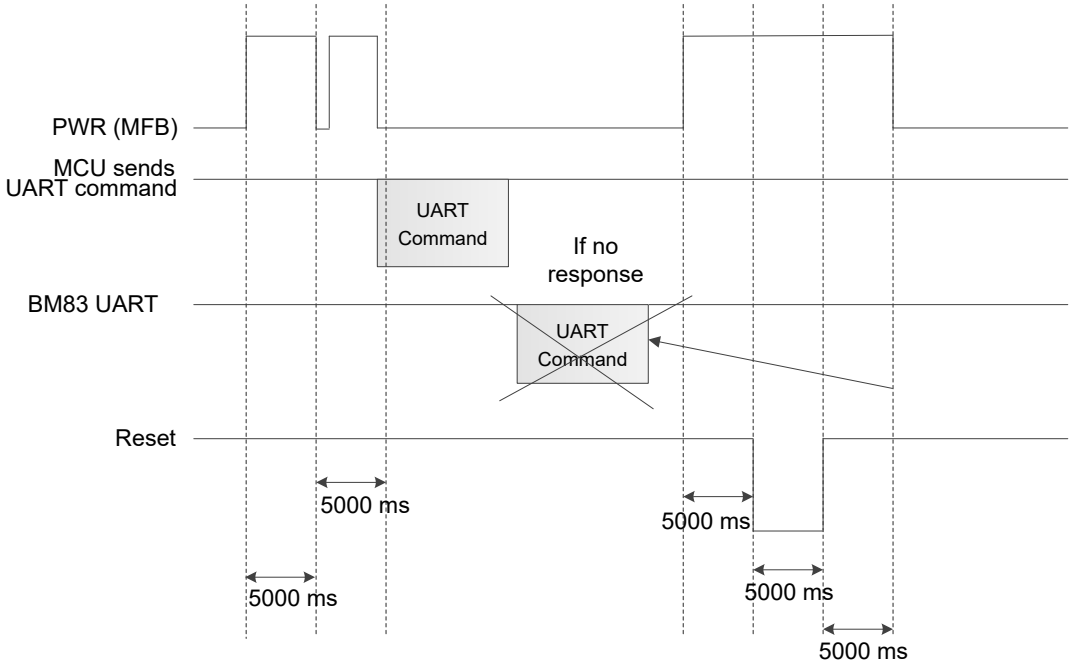

If the BM83 module does not respond to the host MCU's UART command, the MCU re-sends the UART command. If the BM83 module does not respond within 5 secs, the MCU forces the system to reset.

7. PCB Antenna Information

The BM83 module is integrated with a PCB antenna. This chapter provides the radiation pattern, its orientation, and characteristics.

7.1 Antenna Radiation Pattern

The following figure illustrates the 3D radiation pattern of the PCB antenna at 2438 MHz.

Figure 7-1. PCB Antenna 3D Radiation Pattern At 2438 MHz(1)

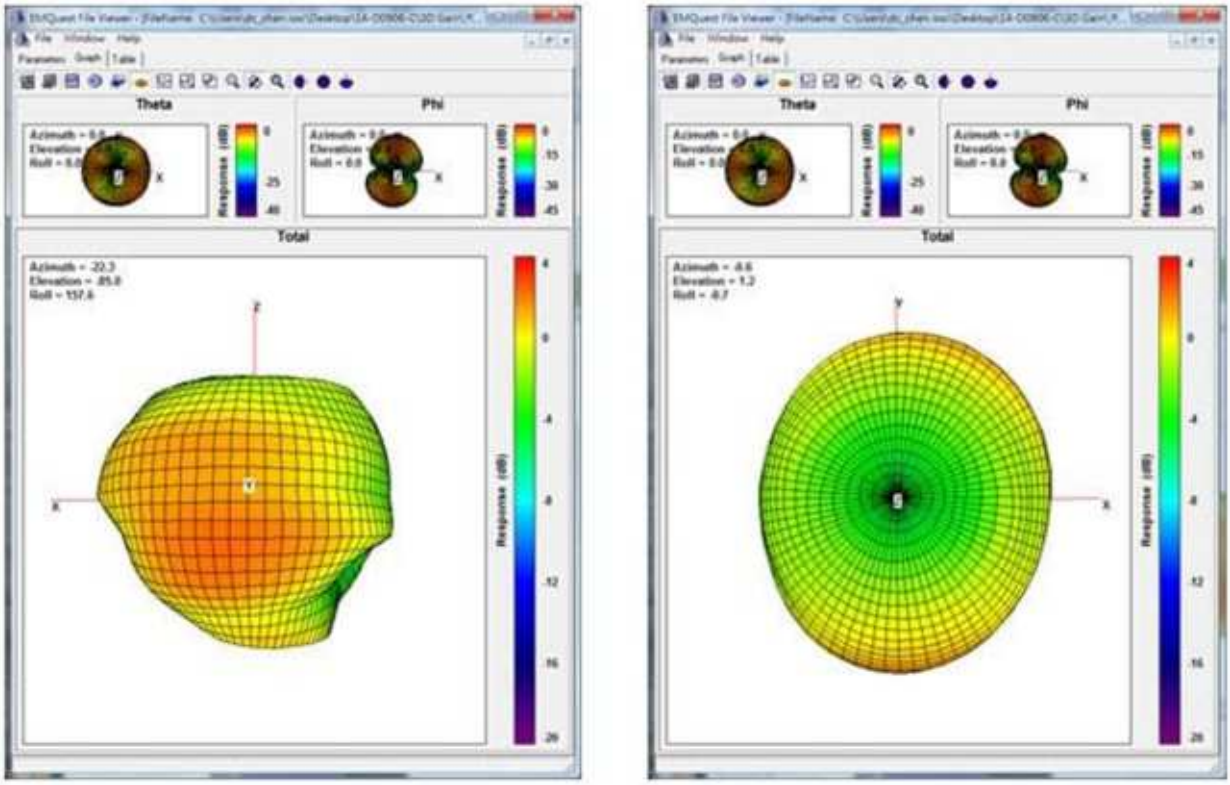

1. The preceding figure illustrates the typical radiation pattern with BM83 module on the 45 mm x 45 mm BM83 Carrier Board.

The following figure illustrates the module orientation for antenna radiation pattern.

Figure 7-2. Module Orientation for Radiation Pattern

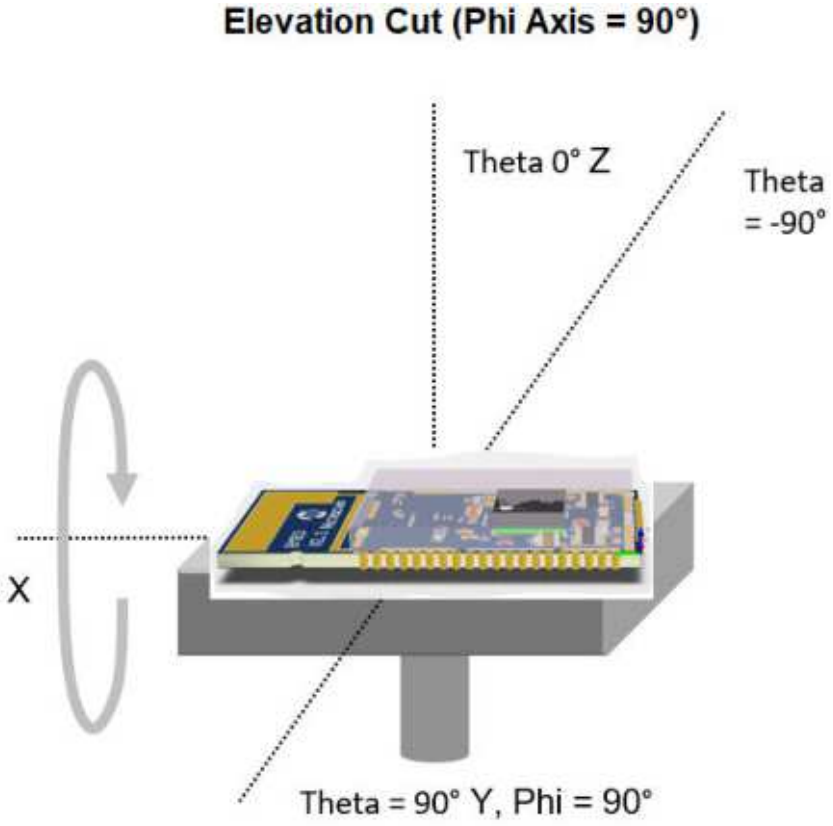

Figure 7-3. Polar Plots(1)

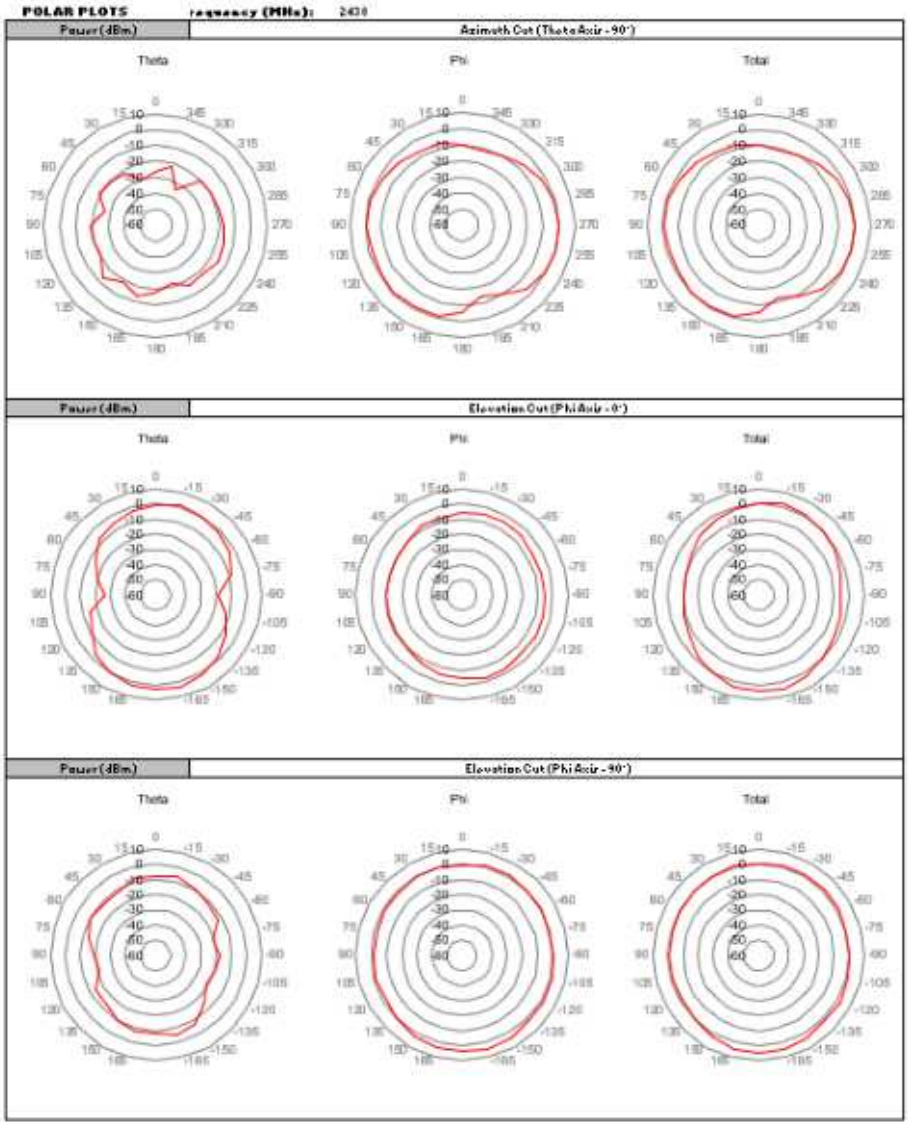

1. The preceding figure illustrates the typical radiation pattern with BM83 module on the 45 mm x 45 mm BM83 Carrier Board.

The following table provides the characteristics of PCB antenna with BM83 Module mounted on BM83 Carrier Board, plugged into BM83 EVB.

Table 7-1. BM83 PCB Antenna Characteristics

Parameter	Value
Frequency	2400 MHz to 2480 MHz
Peak Gain	3.5 dBi
Efficiency	80%

7.2 Module Placement Guidelines

For a Bluetooth-enabled product, the antenna placement affects the overall performance of the system. The antenna requires free space to radiate RF signals and it must not be surrounded by the ground plane. It is recommended that the areas underneath the antenna on the host PCB must not contain copper on the top, inner, or bottom layers, as illustrated in the following figure.

Figure 7-4. Recommended Keep-out Area for PCB Antenna

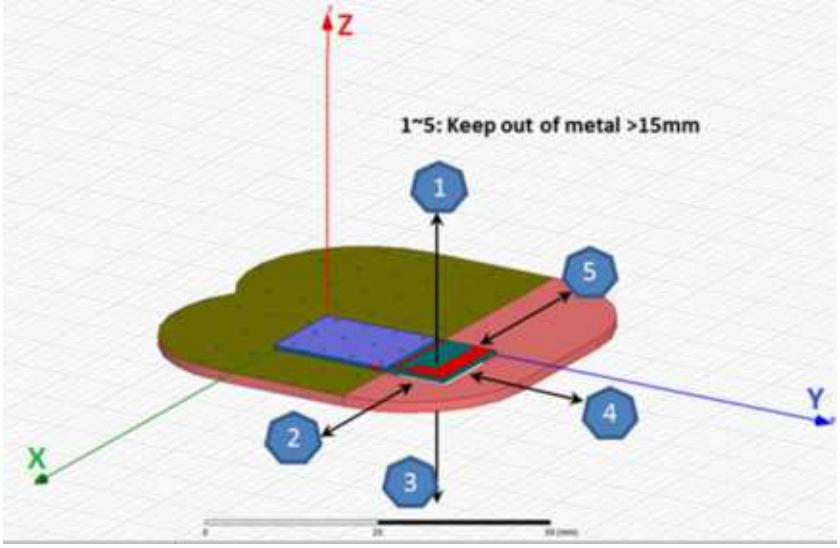

A low-impedance ground plane ensures the best radio performance (best range, lowest noise). The ground plane can be extended beyond the minimum recommendation as required for the main Printed Circuit Board (PCB) Electromagnetic Compatibility (EMC) noise reduction. For the best range performance, keep all external metal at least 15 mm away from the on-board PCB trace antenna.

The following figure illustrates the example of recommended placement of the BM83 module on a host board for the best RF performance.

Figure 7-5. Recommended Module Placement

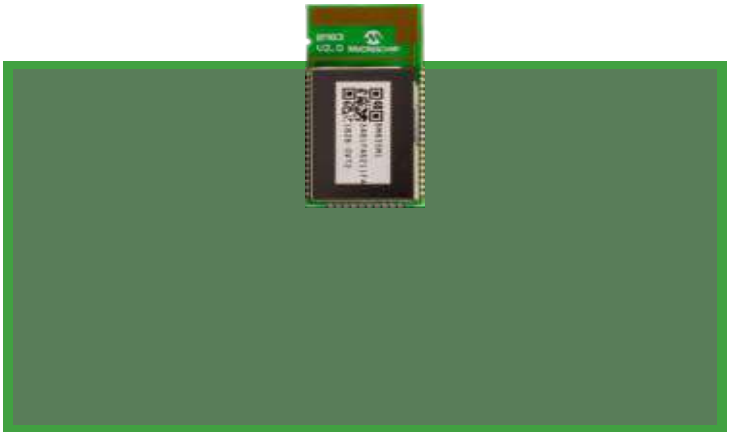

The application board provides a continuous ground plane equal to or greater than the module dimension below the module PCB. Trace routing is not recommended on the application board top layer underneath the module. Bigger ground plane is recommended for better antenna range performance. The reference radiation pattern data provided above uses a BM83 Carrier Board with a dimension of 45 mm x 45 mm. The following figure illustrates the ground plane placement of BM83 module on the host board. The BM83 FCC/ISED certification requires the host board to provide a continuous ground plane with minimum size equal to the BM83 module dimension directly beneath the

module (16mmx19mm). Provide ground plane with distributed via stitching. Avoid trace routing directly under the module. A small cut out can be provided on the host PCB below the module RF test point in order to solder pig tail SMA cable and perform conducted RF measurements.

Figure 7-6. Ground Plane on Host Application Board

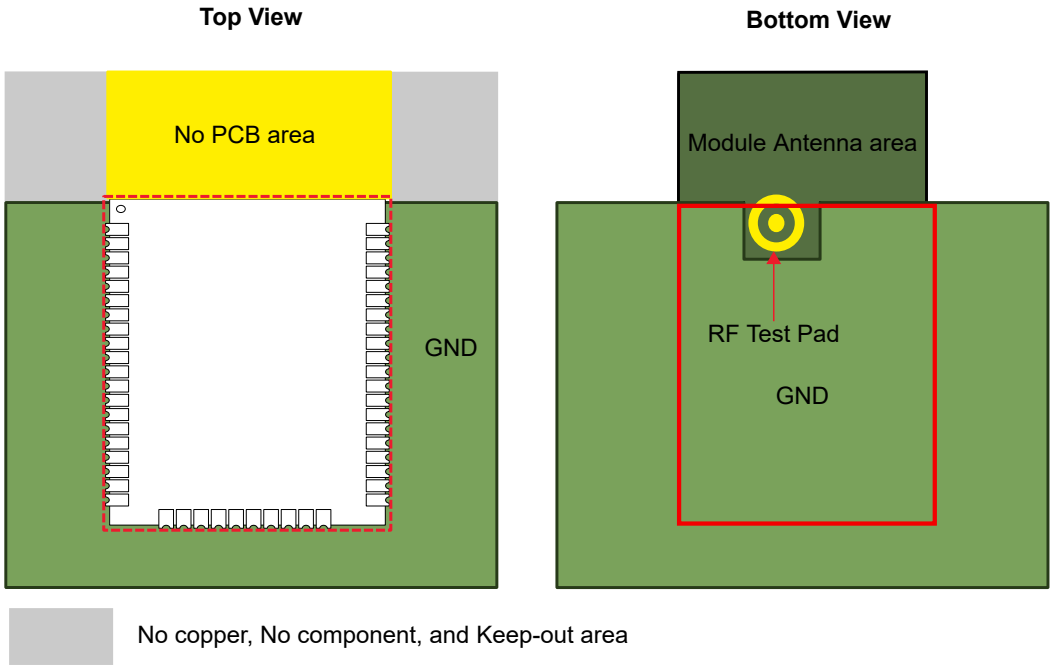

8. Physical Dimensions

The following figures illustrate the PCB dimension and the recommended PCB footprint of the BM83 module.

Figure 8-1. BM83 Module PCB Dimension

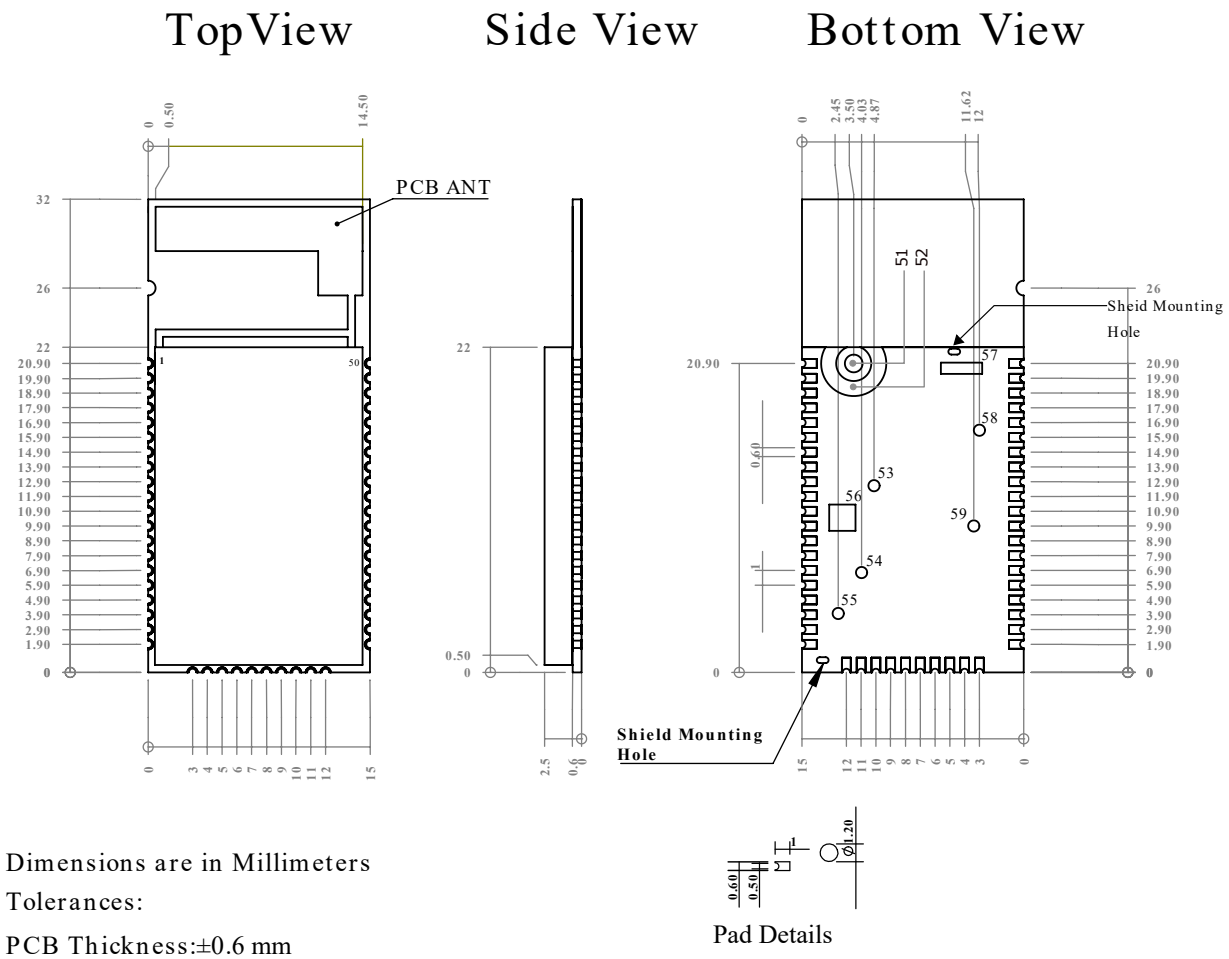

Dimensions are in Millimeters

Tolerances:

PCB Thickness:±0.6 mm

Note: PCB dimensions: X: 15.0 mm, Y: 32.0 mm and tolerances: 0.25 mm.
Pins 51-59 (except 56 and 57) are used only for testing purpose.
Pins 56-57 are GND pads. It is recommended to have these pads included in the module footprint on the host board.

Figure 8-2. Recommended PCB Footprint

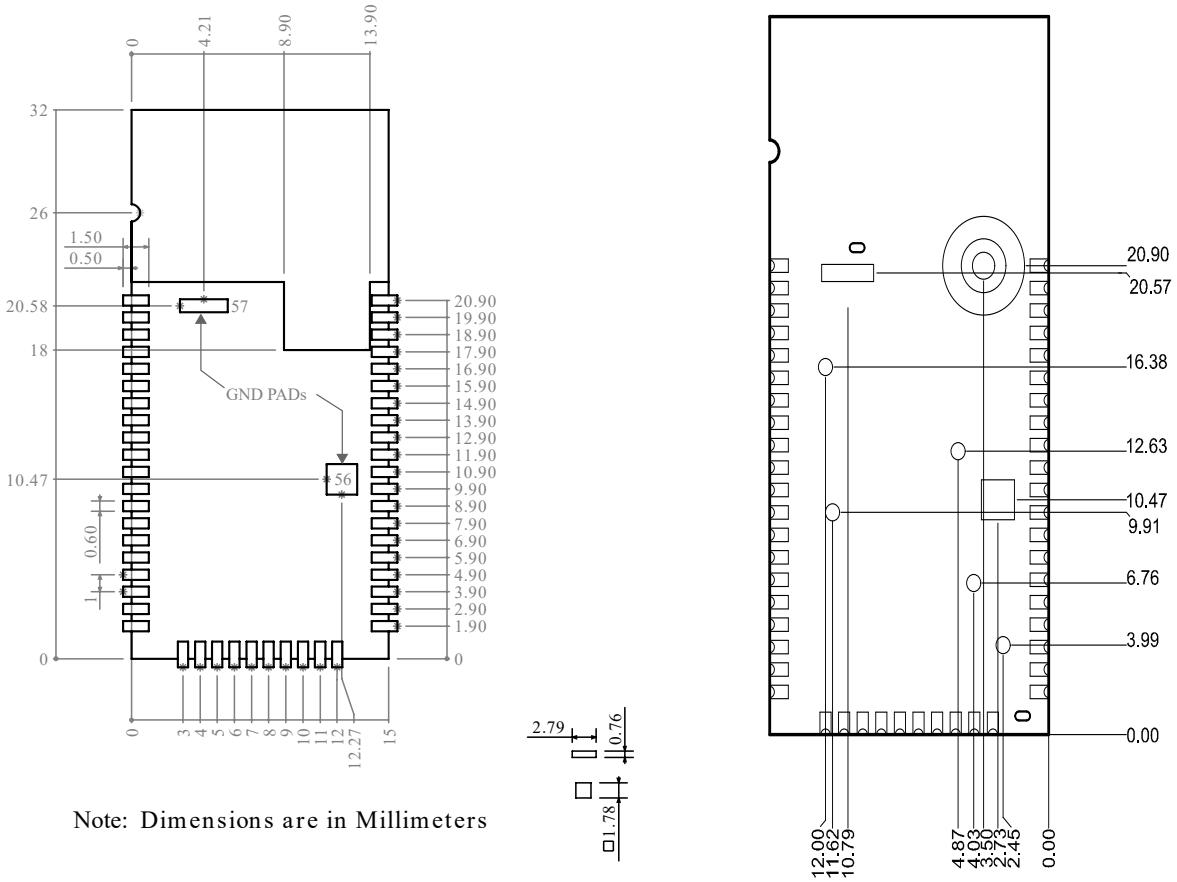

Note: Dimensions are in Millimeters

9. Electrical Specifications

This section provides an overview of the BM83 stereo audio module electrical characteristics. The following table provides the absolute maximum ratings for the BM83 module.

Table 9-1. Absolute Maximum Ratings

Parameter	Min.	Typ.	Max.	Unit
Ambient temperature under bias	-40	—	+85	°C
Storage temperature	-40	—	+150	°C
Battery input voltage (BAT_IN)	—	—	+4.3	V
Adapter input voltage (ADAP_IN)	—	—	+7	V
Maximum output current sink by any I/O pin	—	—	12	mA
Maximum output current sourced by any I/O pin	—	—	12	mA

⚠ CAUTION Stresses listed in the preceding table cause permanent damage to the device. This is a stress rating only. The functional operation of the device at those or any other conditions and those indicated in the operation listings of this specification are not implied. Exposure to maximum rating conditions for extended periods affects device reliability.

The following tables provide the recommended operating conditions and the electrical specifications of the BM83 module.

Table 9-2. Recommended Operating Conditions (1)

Parameter	Min.	Typ.	Max.	Unit
Battery input voltage (BAT_IN)	3.2	3.8	4.2	V
Adapter input voltage (ADAP_IN)(2)	4.5	5	5.5	V
Operation temperature ($T_{OPERATION}$)	-40	+25	+85	ºC

1. The recommended operating condition tables reflect a typical voltage usage for the device.
2. ADAP_IN is recommended to be used to charge the battery in battery powered applications, and/or applications with USB functionality, otherwise ADAP_IN can be left floating.

Table 9-3. I/O and Reset Level (1)

Parameter		Min.	Typ.	Max.	Unit
I/O supply voltage (VDD_IO)		3.0	3.3	3.6	V
I/O voltage levels					
VIL input logic levels low		0	—	0.8	V
VIH input logic levels high		2.0	—	3.6	V
VOL output logic levels low		—	—	0.4	V
VOH output logic levels high		2.4	—	—	V
RST_N	Input low to high threshold point	—	—	1.87	V
	Input high to low threshold point	1.25	—	—	V

.....continued					
Parameter		**Min.**	**Typ.**	**Max.**	**Unit**
Threshold voltage		—	1.6	—	V

1. These parameters are characterized, but not tested on production device.

Table 9-4. Battery Charger (1)

Parameter		Min.	Typ.	Max.	Unit
Adapter input voltage (ADAP_IN)		4.6(2)	5.0	5.5	V
Supply current to charger only		—	3	4.5	mA
Maximum battery fast charge current	Headroom(3) > 0.7V (ADAP_IN = 5V)	—	350	—	mA
	Headroom = 0.3V to 0.7V (ADAP_IN = 4.5V)	—	175(4)	—	mA
Trickle charge voltage threshold		—	3	—	V
Battery charge termination current (% of fast charge current)		—	10	—	%

1. These parameters are characterized, but not tested on production devices.
2. More time is required to get the battery fully charged when ADAP_IN = 4.5V.
3. Headroom = VADAP_IN – VBAT_IN.
4. When VADAP_IN – VBAT_IN > 2V, the maximum fast charge current is 175 mA for thermal protection.

Table 9-5. SAR ADC Operating Conditions

Parameter	Condition	Min.	Typ.	Max.	Unit
Shutdown current (I_{OFF})	PDI_ADC = 1	—	—	1	µA
Resolution	—	—	10	—	bits
Effective Number of Bits (ENOB)	—	7	8	—	bits
SAR core clock (F_{CLOCK})	—	—	0.5	1	MHz
Conversion time per channel (T_{CONV})	10 F_{CLOCK} cycles	10	20	—	µs
Offset error (E_{OFFSET})	—	-5	—	+5	%
Gain error (E_{GAIN})	—	—	—	+1	%
ADC SAR core power-up (t_{PU})	PDI_ADC transitions from 1 to 0	—	—	500	ns
Input voltage range (V_{IN})	Channel 8 (SK2 Pin)	0.25	—	1.4	V
	Channel 9 (SK1 Pin)	0.25	—	1.4	V
	Channel 10 (OTP)	0.25	—	1.4	V
	Channel 11 (ADAP_IN Pin)	2.25	—	12.6	V
	Channel 12 (BAT_IN Pin)	1.0	—	5.6	V

Table 9-6. LED Driver (1)

Parameter	Min.	Typ.	Max.	Unit
Open-drain voltage	—	—	3.6	V
Programmable current range	0	—	5.25	mA
Intensity control	—	16	—	step
Current step	—	0.35	—	mA
Power-down open-drain current	—	—	1	µA
Shutdown current	—	—	1	µA

1. These parameters are characterized, but not tested on production devices.

Table 9-7. Audio Codec Analog-to-Digital Converter (1,4)

Parameter (Condition)	Min.	Typ.	Max.	Unit
Resolution	—	—	16	Bit
Output sample rate	8	—	48	kHz
SNR ratio(2) (at MIC or Line-In)	—	91	—	dB
Digital gain	-54	—	4.85	dB
Digital gain resolution	—	2 to 6	—	dB
MIC boost gain	—	20	—	dB
Analog gain	—	—	60	dB
Analog gain resolution	—	2.0	—	dB
Input full-scale at maximum gain (differential)	—	4	—	mV/rms
Input full-scale at minimum gain (differential)	—	800	—	mV/rms
3 dB bandwidth	—	20	—	kHz
Microphone mode (input impedance)	—	24	—	kΩ
THD+N ratio(3)	—	0.04	—	%
THD+N ratio(3)	—	-68	—	dB

1. These parameters are characterized, but not tested on production devices.
2. T = 25°C, VDD = 1.8V, 1 kHz sine wave input, bandwidth = 20 Hz to 20 kHz.
3. f_{in} = 1kHz sine tone, analog gain = -3 dB, digital gain = 0 dB, bandwidth = 22K, A-weighted, sweep across -100 dBv to 6 dBv.
4. Measurements performed on the BM83 EVB platform.

Table 9-8. Audio Codec Digital-to-Analog Converter(1,5)

Parameter (Condition)	Min.	Typ.	Max.	Unit
Over-sampling rate	—	128	—	*f*s
Resolution	16	—	20	Bit
Output sample rate	8	—	48	kHz
SNR ratio(2)(at Capless mode) for 48 kHz	—	95	—	dB
SNR(2)(at Single-ended mode) for 48 kHz	—	95	—	dB

.....continued					
Parameter (Condition)		**Min.**	**Typ.**	**Max.**	**Unit**
Digital gain		-54	—	4.85	dB
Digital gain resolution		—	2 to 6	—	dB
Analog gain		-28	—	3	dB
Analog gain resolution		—	1	—	dB
Output voltage full-scale swing (AVDD = 1.8V)		495	742.5	—	mV/rms
Maximum output power (16Ω load)		—	34.5	—	mW
Maximum output power (32Ω load)		—	17.2	—	mW
Allowed load	Resistive	16	—	—	Ω
	Capacitive	—	—	500	pF
THD Ratio (3)		0.15	0.02	0.05	%
THD Ratio (3)		-75	-70	-65	dB
THD+N Ratio (3)		0.03	0.04	0.05	%
THD+N Ratio (3)		-72	-70	-65	dB
SNR ratio (at 16Ω load) (4)		—	95	—	dB

1. These parameters are characterized, but not tested on production devices.
2. T = 25°C, VDD = 1.8V, 1 kHz sine wave input, bandwidth = 20 Hz to 20 kHz.
3. f_{in}=1 kHz sine tone, analog gain = -3dB, digital gain = 0dB, bandwidth = 22K, A-weighting applied, sweep across -100 dBv to 6 dBv level, with various loads (16Ω, 32Ω, 100 kΩ)
4. f_{in} = 1 kHz, bandwidth = 20 Hz to 20 kHz, A-weighted, -1 dBFS signal, load =16Ω.
5. Measurements performed on the BM83 EVB platform.

Table 9-9. Transmitter Section Class 1 (MPA Configuration) for BDR and EDR(1,4)

Parameter(2,3)	Bluetooth Specification	Min.	Typ.	Max.	Unit
Transmit power BDR	0 to 20	—	10.4	—	dBm
Transmit power EDR 2M	0 to 20	—	9.2	—	dBm
Transmit power EDR 3M	0 to 20	—	9.2	—	dBm

1. These parameters are characterized, but not tested on production devices.
2. The RF transmit power is the average power measured for the mid-channel (Channel 39).
3. The RF transmit power is calibrated during production using the MP tool and MT8852 Bluetooth test equipment.
4. Test condition: VCC_RF = 1.28V, temperature +25ºC.

Table 9-10. Transmitter Section Class 2 (LPA Configuration) for BDR and EDR (1,4)

Parameter(2,3)	Bluetooth Specification	Min.	Typ.	Max.	Unit
Transmit power BDR	-6 to 4	—	2	—	dBm
Transmit power EDR 2M	-6 to 4	—	0.5	—	dBm
Transmit power EDR 3M	-6 to 4	—	0.5	—	dBm

1. These parameters are characterized, but not tested on production devices.
2. The RF transmit power is the average power measured for the mid-channel (Channel 39).

3. The RF transmit power is calibrated during production using the MP tool and MT8852 Bluetooth test equipment.
4. Test condition: VCC_RF = 1.28V, temperature +25ºC.

Table 9-11. Receiver Section for BDR/EDR/Bluetooth Low Energy(1,2)

Parameter	Bluetooth Specification	Modulation	Min.	Typ.	Max.	Unit
Sensitivity at 0.1% BER	≤-70	GFSK	—	-88	—	dBm
Sensitivity at 0.01% BER	≤-70	π/4 DQPSK	—	-90	—	dBm
	≤-70	8 DPSK	—	-84	—	dBm
Sensitivity at 0.1% BER	≤-70	Bluetooth Low Energy	—	-92	—	dBm

1. These parameters are characterized, but not tested on production devices.
2. Test condition: VCC_RF = 1.28V with temperature +25ºC.

Table 9-12. BM83 System Current Consumption(1,2,3,6,7,8)

Modes	Condition	Role	Packet Type	Current (Typ.)	Unit
A2DP mode	Internal codec, iOS Master	Slave	2DH5/3DH5	12.05	mA
	Internal codec, Android™ Slave	Master	3DH5	12.32	mA
Sniff mode(4)	Internal codec, Bluetooth Low Energy disabled	Slave	DM1	548	µA
		Master	2DH1/3DH1	555	µA
	Internal codec, Bluetooth Low Energy enabled	Slave	DM1	832	µA
		Master	2DH1/3DH1	863	µA
SCO/eSCO connection	Mute at both far end and near end	Slave	2EV3	14.1	mA
		Master	2EV3	13.94	mA
Inquiry Scan	Bluetooth Low Energy disabled	—	—	1.35	mA
	Bluetooth Low Energy enabled	—	—	1.70	mA
Standby mode	System off	Slave	—	2.81	µA
		Master	—	2.85	µA

.....continued					
Modes	**Condition**	**Role**	**Packet Type**	**Current (Typ.)**	**Unit**
RF modes(5)	Continuous TX mode	Modulation OFF, PL0	—	59	mA
		Modulation ON, PL0	—	30	mA
		Modulation OFF, PL2	—	35.5	mA
		Modulation ON, PL2	—	22	mA
	Continuous RX mode	Packet count disable	—	49	mA
		Packet count enable	—	38.5	mA

1. VBAT_IN = 3.8V; current measured across BAT_IN.
2. BM83 module (mounted on BM83 Carrier Board) configured in standalone mode (internal codec) with SBC, used for measurements; no LEDs, no speaker load.
3. iPhone®6 (iOS v12.2) and OnePlus6 (Android Oxygen version 9.0.3) used for measurements.
4. Auto-unsniff mode is disabled. Sniff interval is 500 ms by default; observed time to enter sniff mode is approximately 20 secs.
5. RF TX power is set to 10 dBm.
6. Current measurements average over a period of 120 secs.
7. Distance between DUT (BM83) and Bluetooth source (smartphone) is 30 cms.
8. All measurements are taken inside a shield room.

9.1 Timing Specifications

The following figures illustrate the timing diagram of the IS2083BM/BM83 in I²S and PCM modes.

Figure 9-1. Timing Diagram for I²S Modes (Master/Slave)

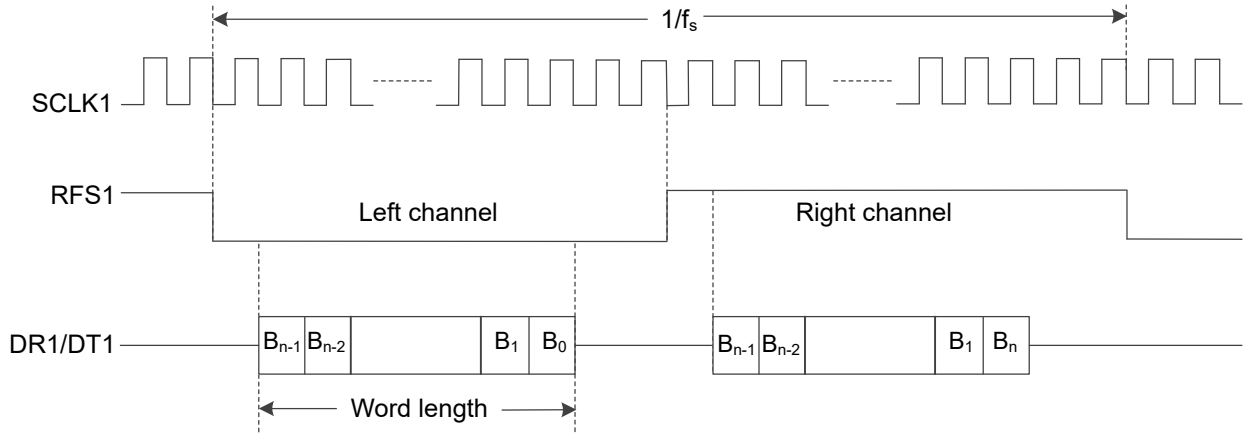

Figure 9-2. Timing Diagram for PCM Modes (Master/Slave)

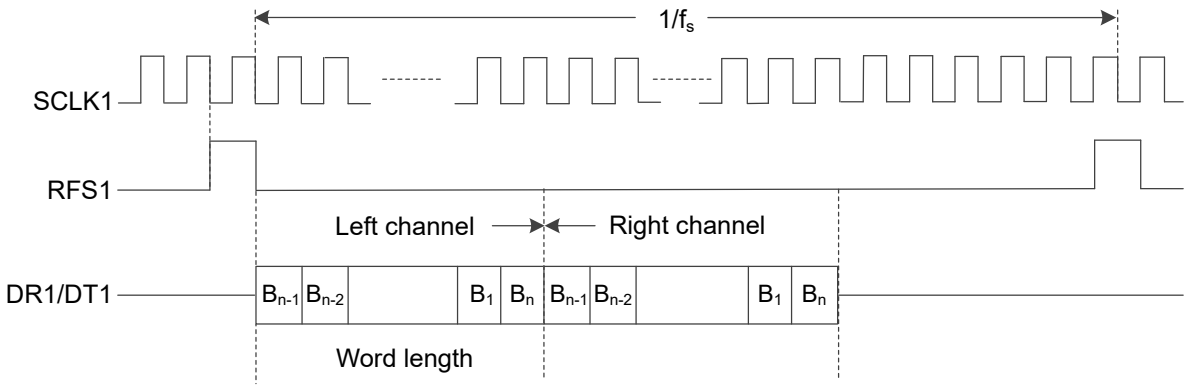

The following figure illustrates the timing diagram of the audio interface.

Figure 9-3. Audio Interface Timing Diagram

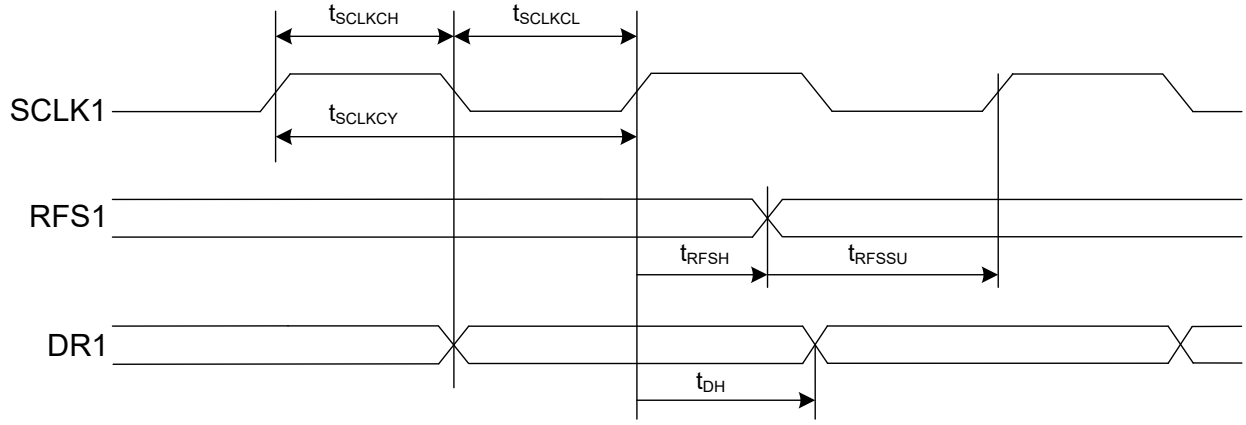

The following table provides the timing specifications of the audio interface.

Table 9-13. Audio Interface Timing Specifications (1)

Parameter	Symbol	Min.	Typ.	Max.	Unit
SCLK1 duty ratio	d_{SCLK}	—	50	—	%
SCLK1 cycle time	t_{SCLKCY}	50	—	—	ns
SCLK1 pulse width high	t_{SCLKCH}	20	—	—	ns
SCLK1 pulse width low	t_{SCLKCL}	20	—	—	ns
RFS1 setup time to SCLK1 rising edge	t_{RFSSU}	10	—	—	ns
RFS1 hold time from SCLK1 rising edge	t_{RFSH}	10	—	—	ns
DR1 hold time from SCLK1 rising edge	t_{DH}	10	—	—	ns

1. Test Conditions: Slave mode, *f*s = 48 kHz, 24-bit data, and SCLK1 period = 256 *f*s.

10. Soldering Recommendations

The BM83 module can be soldered to the host board using standard leaded and lead-free solder reflow profiles. The BM83 module is assembled using a standard lead-free reflow profile, IPC/JEDEC J-STD-020.

To avoid the damage to the module, it is mandatory to follow the recommendations as listed:

- Refer to *AN233 Solder Reflow Recommendation Application Note* for the soldering reflow recommendations.
- Do not exceed peak temperature (T_P) of +260ºC.
- Use no-clean flux solder paste.
- Do not wash the module as moisture can be trapped under the shield.
- Use only one flow. If the PCB requires multiple flows, apply the module on the final flow.

The following figure illustrates the reflow profile of the BM83 module.

Figure 10-1. Reflow Profile

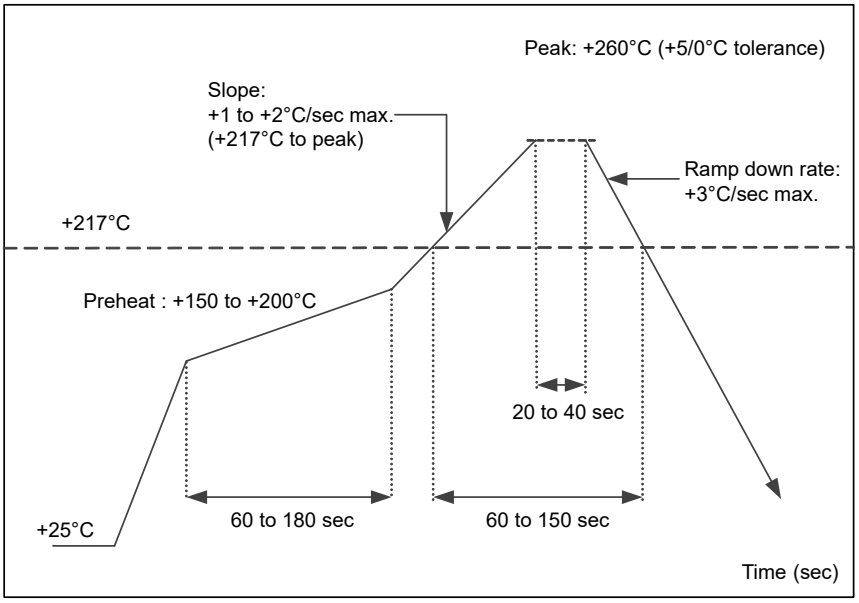

11. Ordering Information

The following table provides the BM83 module ordering information.

Table 11-1. BM83 Module Ordering Information

Module	Microchip IC	Description	Regulatory Certification	Part Number
BM83	IS2083BM-232	Bluetooth 5.0 stereo audio module, Class 1 with shield	FCC, ISED, CE, MIC, KCC, NCC	BM83SM1-00AA, BM83SM1-00AB, BM83SM1-00TA

Note: The BM83 module can be purchased through a Microchip representative. Visit www.microchip.com/BM83 for details on different variants offered, along with their current pricing and a list of distributors for the product.

12. Appendix A: Regulatory Approval

The BM83 module(1) has received regulatory approval for the following countries:

- Bluetooth Special Interest Group (SIG) QDID:
  - BM83 with Class 1(2) : 134083
  - BM83 (3) : 134099
- United States/FCC ID: 2ADHKBM83SM1
- Canada/ISED:
  - IC: 20266-BM83SM1
  - HVIN: BM83SM1
- Europe/CE
- Japan/MIC: 005-102168
- Korea/KCC: R-C-mcp-BM83SM1
- Taiwan/NCC: CCAN19LP0730T1

Notes:

1. Module variants (test report covers all the variants)
   - BM83SM1with shield-can. FCC/ISED certificate is applicable only for BM83SM1**.**
   - BM83AM1 without shield-can. BM83 AM1 is not for sale. FCC/ISED and CE test reports cover BM83AM1.
2. QDID for Class1 power level for BM83SM1, BM83AM1
3. QDID for Class2 power level for BM83SM1, BM83AM1

12.1 United States

The BM83 module has received Federal Communications Commission (FCC) CFR47 Telecommunications, Part 15 Subpart C “Intentional Radiators” single-modular approval in accordance with Part 15.212 Modular Transmitter approval. Single-modular transmitter approval is defined as a complete RF transmission sub-assembly, designed to be incorporated into another device, that must demonstrate compliance with FCC rules and policies independent of any host. A transmitter with a modular grant can be installed in different end-use products (referred to as a host, host product, or host device) by the grantee or other equipment manufacturer, then the host product may not require additional testing or equipment authorization for the transmitter function provided by that specific module or limited module device.

The user must comply with all of the instructions provided by the Grantee, which indicate installation and/or operating conditions necessary for compliance.

A host product itself is required to comply with all other applicable FCC equipment authorization regulations, requirements, and equipment functions that are not associated with the transmitter module portion. For example, compliance must be demonstrated: to regulations for other transmitter components within a host product; to requirements for unintentional radiators (Part 15 Subpart B), such as digital devices, computer peripherals, radio receivers, etc.; and to additional authorization requirements for the non-transmitter functions on the transmitter module (i.e., Suppliers Declaration of Conformity (SDoC) or certification) as appropriate (e.g., Bluetooth and Wi-Fi transmitter modules may also contain digital logic functions).

12.1.1 Labeling and User Information Requirements

The BM83 module has been labeled with its own FCC ID number, and if the FCC ID is not visible when the module is installed inside another device, then the outside of the finished product into which the module is installed must display a label referring to the enclosed module. This exterior label should use the following wording:

Contains Transmitter Module FCC ID: 2ADHKBM83SM1

or

Contains FCC ID: 2ADHKBM83SM1

This device complies with Part 15 of the FCC Rules. Operation is subject to the following two conditions: (1) this device may not cause harmful interference, and (2) this device must accept any interference received, including interference that may cause undesired operation.

The user's manual for the finished product should include the following statement:

This equipment has been tested and found to comply with the limits for a Class B digital device, pursuant to part 15 of the FCC Rules. These limits are designed to provide reasonable protection against harmful interference in a residential installation. This equipment generates, uses and can radiate radio frequency energy, and if not installed and used in accordance with the instructions, may cause harmful interference to radio communications. However, there is no guarantee that interference will not occur in a particular installation. If this equipment does cause harmful interference to radio or television reception, which can be determined by turning the equipment off and on, the user is encouraged to try to correct the interference by one or more of the following measures:

- Reorient or relocate the receiving antenna
- Increase the separation between the equipment and receiver
- Connect the equipment into an outlet on a circuit different from that to which the receiver is connected
- Consult the dealer or an experienced radio/TV technician for help

Additional information on labeling and user information requirements for Part 15 devices can be found in KDB Publication 784748, which is available at the FCC Office of Engineering and Technology (OET) Laboratory Division Knowledge Database (KDB) apps.fcc.gov/oetcf/kdb/index.cfm.

12.1.2 RF Exposure

All transmitters regulated by FCC must comply with RF exposure requirements. KDB 447498 General RF Exposure Guidance provides guidance in determining whether proposed or existing transmitting facilities, operations or devices comply with limits for human exposure to Radio Frequency (RF) fields adopted by the Federal Communications Commission (FCC).

From the FCC Grant: Output power listed is conducted. This grant is valid only when the module is sold to OEM integrators and must be installed by the OEM or OEM integrators. This transmitter is restricted for use with the specific antenna(s) tested in this application for Certification and must not be co-located or operating in conjunction with any other antenna or transmitters within a host device, except in accordance with FCC multi-transmitter product procedures.

BM83: These modules are approved for installation into mobile or/and portable host platforms.

12.1.3 Helpful Web Sites

- Federal Communications Commission (FCC): www.fcc.gov.
- FCC Office of Engineering and Technology (OET) Laboratory Division Knowledge Database (KDB) apps.fcc.gov/oetcf/kdb/index.cfm.

12.2 Canada

The BM83 module has been certified for use in Canada under Innovation, Science, and Economic Development Canada (ISED, formerly Industry Canada) Radio Standards Procedure (RSP) RSP-100, Radio Standards Specification (RSS) RSS-Gen and RSS-247. Modular approval permits the installation of a module in a host device without the need to recertify the device.

12.2.1 Labeling and User Information Requirements

Labeling Requirements (from RSP-100 - Issue 11, Section 3): The host product shall be properly labeled to identify the module within the host device.

The Innovation, Science and Economic Development Canada certification label of a module shall be clearly visible at all times when installed in the host device; otherwise, the host product must be labeled to display the Innovation, Science and Economic Development Canada certification number of the module, preceded by the word “Contains” or similar wording expressing the same meaning, as follows:

Contains IC: 20266-BM83SM1

User Manual Notice for License-Exempt Radio Apparatus (from Section 8.4 RSS-Gen, Issue 4, November 2014): User manuals for license-exempt radio apparatus shall contain the following or equivalent notice in a conspicuous location in the user manual or alternatively on the device or both:

This device complies with Industry Canada's license exempt RSS standard(s). Operation is subject to the following two conditions:

(1) This device may not cause interference, and

(2) This device must accept any interference, including interference that may cause undesired operation of the device.

Le présent appareil est conforme aux CNR d'Industrie Canada applicables aux appareils radio exempts de licence. L'exploitation est autorisée aux deux conditions suivantes:

(1) l'appareil ne doit pas produire de brouillage, et

(2) l'utilisateur de l'appareil doit accepter tout brouillage radioélectrique subi, même si le brouillage est susceptible d'en compromettre le fonctionnement.

Guidelines on Transmitter Antenna for License Exempt Radio Apparatus:

Under Industry Canada regulations, this radio transmitter may only operate using an antenna of a type and maximum (or lesser) gain approved for the transmitter by Industry Canada. To reduce potential radio interference to other users, the antenna type and its gain should be so chosen that the equivalent isotropically radiated power (e.i.r.p.) is not more than that necessary for successful communication.

Conformément à la réglementation d'Industrie Canada, le présent émetteur radio peut fonctionner avec une antenne d'un type et d'un gain maximal (ou inférieur) approuvé pour l'émetteur par Industrie Canada. Dans le but de réduire les risques de brouillage radioélectrique à l'intention des autres utilisateurs, il faut choisir le type d'antenne et son gain de sorte que la puissance isotrope rayonnée équivalente (p.i.r.e.) ne dépasse pas l'intensité nécessaire à l'établisse-ment d'une communication satisfaisante.

Immediately following the above notice, the manufacturer shall provide a list of all antenna types approved for use with the transmitter, indicating the maximum permissible antenna gain (in dBi) and required impedance for each.

12.2.2 RF Exposure

All transmitters regulated by Innovation, Science and Economic Development Canada (ISED) must comply with RF exposure requirements listed in RSS-102 - Radio Frequency (RF) Exposure Compliance of Radiocommunication Apparatus (All Frequency Bands).

This transmitter is restricted for use with a specific antenna tested in this application for certification, and must not be co-located or operating in conjunction with any other antenna or transmitters within a host device, except in accordance with Canada multi-transmitter product procedures.

BM83: The device operates at an output power level which is within the ISED SAR test exemption limits at any user distance.

12.2.3 Helpful Web Sites

Innovation, Science and Economic Development Canada (ISED): www.ic.gc.ca/.

12.3 Europe

The BM83 is a Radio Equipment Directive (RED) assessed radio module that is CE marked and has been manufactured and tested with the intention of being integrated into a final product.

The BM83 module has been tested to RED 2014/53/EU Essential Requirements for Health and Safety (Article (3.1(a)), Electromagnetic Compatibility (EMC) (Article 3.1(b)), and Radio (Article 3.2), which is summarized in the following European Compliance Testing table.

The ETSI provides guidance on modular devices in the "*Guide to the application of harmonised standards covering articles 3.1b and 3.2 of the RED 2014/53/EU (RED) to multi-radio and combined radio and non-radio equipment*" document available at http://www.etsi.org/deliver/etsi_eg/203300_203399/20 3367/01.01.01_60/eg_203367v010101p.pdf.

Note: To maintain conformance to the testing listed in the following European Compliance Testing table, the module shall be installed in accordance with the installation instructions in this data sheet and shall not be modified. When integrating a radio module into a completed product, the integrator becomes the manufacturer of the final product and is therefore responsible for demonstrating compliance of the final product with the essential requirements against the RED.

12.3.1 Labeling and User Information Requirements

The label on the final product that contains the BM83 module must follow CE marking requirements.

Table 12-1. European Compliance Information

Certification	Standard	Article	Laboratory	Report Number	Date
Safety	EN60950-1:2006/ A11:2009/ A1:2010/ A12:2011/ A2:2013	3.1(a)	TUV Rheinland, Taiwan	50206965 001	2019-03-18
Health	EN300328 V2.1.1/ EN62479:2010			50211535 001	2019-03-18
				50211536 001	2019-03-18
EMC	EN301489-1 V2.1.1	3.1(b)		50196290 001	2019-03-18
	EN301489-1 V2.2.0				
	EN301489-17 V3.1.1				
	EN301489-17 V3.2.0				
Radio	EN300328 V2.1.1	3.2		50211535 001	2019-03-18
				50211536 001	2019-03-18

12.3.2 Conformity Assessment

From ETSI Guidance Note EG 203367, section 6.1, when non-radio products are combined with a radio product:

If the manufacturer of the combined equipment installs the radio product in a host non-radio product in equivalent assessment conditions (i.e. host equivalent to the one used for the assessment of the radio product) and according to the installation instructions for the radio product, then no additional assessment of the combined equipment against article 3.2 of the RED is required.

The European Compliance Information listed in the preceding table was performed using the integral chip antenna.

12.3.2.1 Simplified EU Declaration of Conformity

Hereby, Microchip Technology Inc. declares that the radio equipment type BM83 is in compliance with Directive 2014/53/EU.

The full text of the EU declaration of conformity for this product is available at www.microchip.com/design-centers/wireless-connectivity/.

12.3.3 Helpful Websites

A document that can be used as a starting point in understanding the use of Short Range Devices (SRD) in Europe is the European Radio Communications Committee (ERC) Recommendation 70-03 E, which can be downloaded from the European Communications Committee (ECC) at: http://www.ecodocdb.dk/.

Additional helpful web sites are:

- Radio Equipment Directive (2014/53/EU): https://ec.europa.eu/growth/single-market/european-standards/harmonised-standards/red_en
- European Conference of Postal and Telecommunications Administrations (CEPT): http://www.cept.org
- European Telecommunications Standards Institute (ETSI): http://www.etsi.org
- The Radio Equipment Directive Compliance Association (REDCA): http://www.redca.eu/

12.4 Japan

The BM83 module has received type certification and is labeled with its own technical conformity mark and certification number as required to conform to the technical standards regulated by the Ministry of Internal Affairs and Communications (MIC) of Japan pursuant to the Radio Act of Japan.

Integration of this module into a final product does not require additional radio certification provided installation instructions are followed and no modifications of the module are allowed. Additional testing may be required:

- If the host product is subject to electrical appliance safety (for example, powered from an AC mains), the host product may require Product Safety Electrical Appliance and Material (PSE) testing. The integrator should contact their conformance laboratory to determine if this testing is required
- There is an voluntary Electromagnetic Compatibility (EMC) test for the host product administered by VCCI: www.vcci.jp/vcci_e/index.html

12.4.1 Labeling and User Information Requirements

The label on the final product which contains the BM83 module must follow Japan marking requirements. The integrator of the module should refer to the labeling requirements for Japan available at the Ministry of Internal Affairs and Communications (MIC) website.

For the BM83 module, due to a limited module size, the technical conformity logo and ID is displayed in the data sheet and/or packaging and cannot be displayed on the module label. The final product in which this module is being used must have a label referring to the type certified module inside:

For the BM83 module, due to a limited module size, the technical conformity logo and ID is displayed in the data sheet and/or packaging and cannot be displayed on the module label. The final product in which this module is being used must have a label referring to the type certified module inside:



12.4.2 Helpful Web Sites

- Ministry of Internal Affairs and Communications (MIC): www.tele.soumu.go.jp/e/index.htm.
- Association of Radio Industries and Businesses (ARIB): www.arib.or.jp/english/.

12.5 Korea

The BM83 module has received certification of conformity in accordance with the Radio Waves Act. Integration of this module into a final product does not require additional radio certification provided installation instructions are followed and no modifications of the module are allowed.

12.5.1 Labeling and User Information Requirements

The label on the final product which contains the BM83 module must follow KC marking requirements. The integrator of the module should refer to the labeling requirements for Korea available on the Korea Communications Commission (KCC) website.

The BM83 module is labeled with its own KC mark. The final product requires the KC mark and certificate number of the module:

The BM83 module is labeled with its own KC mark. The final product requires the KC mark and certificate number of the module:

R-C-mcp-BM83SM1

12.5.2 Helpful Websites

- Korea Communications Commission (KCC): www.kcc.go.kr.
- National Radio Research Agency (RRA): rra.go.kr.

12.6 Taiwan

The BM83 module has received compliance approval in accordance with the Telecommunications Act. Customers seeking to use the compliance approval in their product should contact Microchip Technology sales or distribution partners to obtain a Letter of Authority.

Integration of this module into a final product does not require additional radio certification provided installation instructions are followed and no modifications of the module are allowed.

12.6.1 Labeling and User Information Requirements

For the BM83 module, due to the limited module size, the NCC mark and ID are displayed in the data sheet only and cannot be displayed on the module label:

For the BM83 module, due to the limited module size, the NCC mark and ID are displayed in the data sheet only and cannot be displayed on the module label:

CCAN19LP0730T1

The user's manual should contain following warning (for RF device) in traditional Chinese:

注意！

依據 低功率電波輻射性電機管理辦法

第十二條 經型式認證合格之低功率射頻電機，非經許 可，

公司、商號或使用者均不得擅自變更頻率、加大功率或 變更原設計
之特性及功能。
第十四條 低功率射頻電機之使用不得影響飛航安全及 干擾合法通信；
經發現有干擾現象時，應立即停用，並改善至無干擾時 方得繼續使用。
前項合法通信，指依電信規定作業之無線電信。
低功率射頻電機須忍受合法通信或工業、科學及醫療用 電波輻射性
電機設備之干擾。

12.6.2 Helpful Web Sites

National Communications Commission (NCC): www.ncc.gov.tw

12.7 Other Regulatory Information

- For information about other countries' jurisdictions not covered here, refer to http://www.microchip.com/design-centers/wireless-connectivity/certifications
- Should other regulatory jurisdiction certification be required by the customer, or the customer needs to recertify the module for other reasons, contact Microchip for the required utilities and documentation

13. Document Revision History

Revision	Date	Section	Description
C	07/2020	Document	Minor edits.
		Introduction	Updated with minor edits
		Features	• Added MSPK and AT solution • Updated with minor edits
		2. Device Overview	Updated mode of operations
		11. Ordering Information	Updated part number and regulatory certification
		5. Power Management Unit	Updated Figure 5-1.
		8. Physical Dimensions	Updated Figure 8-2.
		12. Appendix A: Regulatory Approval	Updated certification ids for Japan, Korea and Taiwan
B	09/2019	Document	Minor edits.
		2.2 BM83 Module Pin Description	Updated descriptions of Pin# 20, 31, and 49 in Table 2-2.
		5. Power Management Unit	• Removed Reviving and Pre-charging mode related information. • Updated Figure 5-1.
		5.2 SAR ADC	• Changed the section title to SAR ADC from Battery Voltage Monitoring and combined Ambient Detection Section. • Updated contents.
		6. Application Information	• Reorganized sections in this chapter. • Added 6.1 Power On/Off Sequence section. • Updated 6.2 Reset section. • Updated Table 6-3. • Updated Figure 6-9 and 6.6 Host MCU Interface Over UART.
		9. Electrical Specifications	Added Table 9-5.
A	07/2019	Document	Initial Revision

The Microchip Website

Microchip provides online support via our website at www.microchip.com/. This website is used to make files and information easily available to customers. Some of the content available includes:

- **Product Support** – Data sheets and errata, application notes and sample programs, design resources, user's guides and hardware support documents, latest software releases and archived software
- **General Technical Support** – Frequently Asked Questions (FAQs), technical support requests, online discussion groups, Microchip design partner program member listing
- **Business of Microchip** – Product selector and ordering guides, latest Microchip press releases, listing of seminars and events, listings of Microchip sales offices, distributors and factory representatives

Product Change Notification Service

Microchip's product change notification service helps keep customers current on Microchip products. Subscribers will receive email notification whenever there are changes, updates, revisions or errata related to a specified product family or development tool of interest.

To register, go to www.microchip.com/pcn and follow the registration instructions.

Customer Support

Users of Microchip products can receive assistance through several channels:

- Distributor or Representative
- Local Sales Office
- Embedded Solutions Engineer (ESE)
- Technical Support

Customers should contact their distributor, representative or ESE for support. Local sales offices are also available to help customers. A listing of sales offices and locations is included in this document.

Technical support is available through the website at: www.microchip.com/support

Microchip Devices Code Protection Feature

Note the following details of the code protection feature on Microchip devices:

- Microchip products meet the specification contained in their particular Microchip Data Sheet.
- Microchip believes that its family of products is one of the most secure families of its kind on the market today, when used in the intended manner and under normal conditions.
- There are dishonest and possibly illegal methods used to breach the code protection feature. All of these methods, to our knowledge, require using the Microchip products in a manner outside the operating specifications contained in Microchip's Data Sheets. Most likely, the person doing so is engaged in theft of intellectual property.
- Microchip is willing to work with the customer who is concerned about the integrity of their code.
- Neither Microchip nor any other semiconductor manufacturer can guarantee the security of their code. Code protection does not mean that we are guaranteeing the product as "unbreakable."

Code protection is constantly evolving. We at Microchip are committed to continuously improving the code protection features of our products. Attempts to break Microchip's code protection feature may be a violation of the Digital Millennium Copyright Act. If such acts allow unauthorized access to your software or other copyrighted work, you may have a right to sue for relief under that Act.

Legal Notice

Information contained in this publication regarding device applications and the like is provided only for your convenience and may be superseded by updates. It is your responsibility to ensure that your application meets with

your specifications. MICROCHIP MAKES NO REPRESENTATIONS OR WARRANTIES OF ANY KIND WHETHER EXPRESS OR IMPLIED, WRITTEN OR ORAL, STATUTORY OR OTHERWISE, RELATED TO THE INFORMATION, INCLUDING BUT NOT LIMITED TO ITS CONDITION, QUALITY, PERFORMANCE, MERCHANTABILITY OR FITNESS FOR PURPOSE. Microchip disclaims all liability arising from this information and its use. Use of Microchip devices in life support and/or safety applications is entirely at the buyer's risk, and the buyer agrees to defend, indemnify and hold harmless Microchip from any and all damages, claims, suits, or expenses resulting from such use. No licenses are conveyed, implicitly or otherwise, under any Microchip intellectual property rights unless otherwise stated.

Trademarks

The Microchip name and logo, the Microchip logo, Adaptec, AnyRate, AVR, AVR logo, AVR Freaks, BesTime, BitCloud, chipKIT, chipKIT logo, CryptoMemory, CryptoRF, dsPIC, FlashFlex, flexPWR, HELDO, IGLOO, JukeBlox, KeeLoq, Kleer, LANCheck, LinkMD, maXStylus, maXTouch, MediaLB, megaAVR, Microsemi, Microsemi logo, MOST, MOST logo, MPLAB, OptoLyzer, PackeTime, PIC, picoPower, PICSTART, PIC32 logo, PolarFire, Prochip Designer, QTouch, SAM-BA, SenGenuity, SpyNIC, SST, SST Logo, SuperFlash, Symmetricom, SyncServer, Tachyon, TempTrackr, TimeSource, tinyAVR, UNI/O, Vectron, and XMEGA are registered trademarks of Microchip Technology Incorporated in the U.S.A. and other countries.

APT, ClockWorks, The Embedded Control Solutions Company, EtherSynch, FlashTec, Hyper Speed Control, HyperLight Load, IntelliMOS, Libero, motorBench, mTouch, Powermite 3, Precision Edge, ProASIC, ProASIC Plus, ProASIC Plus logo, Quiet-Wire, SmartFusion, SyncWorld, Temux, TimeCesium, TimeHub, TimePictra, TimeProvider, Vite, WinPath, and ZL are registered trademarks of Microchip Technology Incorporated in the U.S.A.

Adjacent Key Suppression, AKS, Analog-for-the-Digital Age, Any Capacitor, AnyIn, AnyOut, BlueSky, BodyCom, CodeGuard, CryptoAuthentication, CryptoAutomotive, CryptoCompanion, CryptoController, dsPICDEM, dsPICDEM.net, Dynamic Average Matching, DAM, ECAN, EtherGREEN, In-Circuit Serial Programming, ICSP, INICnet, Inter-Chip Connectivity, JitterBlocker, KleerNet, KleerNet logo, memBrain, Mindi, MiWi, MPASM, MPF, MPLAB Certified logo, MPLIB, MPLINK, MultiTRAK, NetDetach, Omniscient Code Generation, PICDEM, PICDEM.net, PICkit, PICtail, PowerSmart, PureSilicon, QMatrix, REAL ICE, Ripple Blocker, SAM-ICE, Serial Quad I/O, SMART-I.S., SQI, SuperSwitcher, SuperSwitcher II, Total Endurance, TSHARC, USBCheck, VariSense, ViewSpan, WiperLock, Wireless DNA, and ZENA are trademarks of Microchip Technology Incorporated in the U.S.A. and other countries.

SQTP is a service mark of Microchip Technology Incorporated in the U.S.A.

The Adaptec logo, Frequency on Demand, Silicon Storage Technology, and Symmcom are registered trademarks of Microchip Technology Inc. in other countries.

GestIC is a registered trademark of Microchip Technology Germany II GmbH & Co. KG, a subsidiary of Microchip Technology Inc., in other countries.

All other trademarks mentioned herein are property of their respective companies.

© 2020, Microchip Technology Incorporated, Printed in the U.S.A., All Rights Reserved.

ISBN: 978-1-5224-6425-9

Quality Management System

For information regarding Microchip's Quality Management Systems, please visit www.microchip.com/quality.

Worldwide Sales and Service

AMERICAS	ASIA/PACIFIC	ASIA/PACIFIC	EUROPE
Corporate Office 2355 West Chandler Blvd. Chandler, AZ 85224-6199 Tel: 480-792-7200 Fax: 480-792-7277 Technical Support: www.microchip.com/support Web Address: www.microchip.com **Atlanta** Duluth, GA Tel: 678-957-9614 Fax: 678-957-1455 **Austin, TX** Tel: 512-257-3370 **Boston** Westborough, MA Tel: 774-760-0087 Fax: 774-760-0088 **Chicago** Itasca, IL Tel: 630-285-0071 Fax: 630-285-0075 **Dallas** Addison, TX Tel: 972-818-7423 Fax: 972-818-2924 **Detroit** Novi, MI Tel: 248-848-4000 **Houston, TX** Tel: 281-894-5983 **Indianapolis** Noblesville, IN Tel: 317-773-8323 Fax: 317-773-5453 Tel: 317-536-2380 **Los Angeles** Mission Viejo, CA Tel: 949-462-9523 Fax: 949-462-9608 Tel: 951-273-7800 **Raleigh, NC** Tel: 919-844-7510 **New York, NY** Tel: 631-435-6000 **San Jose, CA** Tel: 408-735-9110 Tel: 408-436-4270 **Canada - Toronto** Tel: 905-695-1980 Fax: 905-695-2078	**Australia - Sydney** Tel: 61-2-9868-6733 **China - Beijing** Tel: 86-10-8569-7000 **China - Chengdu** Tel: 86-28-8665-5511 **China - Chongqing** Tel: 86-23-8980-9588 **China - Dongguan** Tel: 86-769-8702-9880 **China - Guangzhou** Tel: 86-20-8755-8029 **China - Hangzhou** Tel: 86-571-8792-8115 **China - Hong Kong SAR** Tel: 852-2943-5100 **China - Nanjing** Tel: 86-25-8473-2460 **China - Qingdao** Tel: 86-532-8502-7355 **China - Shanghai** Tel: 86-21-3326-8000 **China - Shenyang** Tel: 86-24-2334-2829 **China - Shenzhen** Tel: 86-755-8864-2200 **China - Suzhou** Tel: 86-186-6233-1526 **China - Wuhan** Tel: 86-27-5980-5300 **China - Xian** Tel: 86-29-8833-7252 **China - Xiamen** Tel: 86-592-2388138 **China - Zhuhai** Tel: 86-756-3210040	**India - Bangalore** Tel: 91-80-3090-4444 **India - New Delhi** Tel: 91-11-4160-8631 **India - Pune** Tel: 91-20-4121-0141 **Japan - Osaka** Tel: 81-6-6152-7160 **Japan - Tokyo** Tel: 81-3-6880- 3770 **Korea - Daegu** Tel: 82-53-744-4301 **Korea - Seoul** Tel: 82-2-554-7200 **Malaysia - Kuala Lumpur** Tel: 60-3-7651-7906 **Malaysia - Penang** Tel: 60-4-227-8870 **Philippines - Manila** Tel: 63-2-634-9065 **Singapore** Tel: 65-6334-8870 **Taiwan - Hsin Chu** Tel: 886-3-577-8366 **Taiwan - Kaohsiung** Tel: 886-7-213-7830 **Taiwan - Taipei** Tel: 886-2-2508-8600 **Thailand - Bangkok** Tel: 66-2-694-1351 **Vietnam - Ho Chi Minh** Tel: 84-28-5448-2100	**Austria - Wels** Tel: 43-7242-2244-39 Fax: 43-7242-2244-393 **Denmark - Copenhagen** Tel: 45-4485-5910 Fax: 45-4485-2829 **Finland - Espoo** Tel: 358-9-4520-820 **France - Paris** Tel: 33-1-69-53-63-20 Fax: 33-1-69-30-90-79 **Germany - Garching** Tel: 49-8931-9700 **Germany - Haan** Tel: 49-2129-3766400 **Germany - Heilbronn** Tel: 49-7131-72400 **Germany - Karlsruhe** Tel: 49-721-625370 **Germany - Munich** Tel: 49-89-627-144-0 Fax: 49-89-627-144-44 **Germany - Rosenheim** Tel: 49-8031-354-560 **Israel - Ra'anana** Tel: 972-9-744-7705 **Italy - Milan** Tel: 39-0331-742611 Fax: 39-0331-466781 **Italy - Padova** Tel: 39-049-7625286 **Netherlands - Drunen** Tel: 31-416-690399 Fax: 31-416-690340 **Norway - Trondheim** Tel: 47-72884388 **Poland - Warsaw** Tel: 48-22-3325737 **Romania - Bucharest** Tel: 40-21-407-87-50 **Spain - Madrid** Tel: 34-91-708-08-90 Fax: 34-91-708-08-91 **Sweden - Gothenberg** Tel: 46-31-704-60-40 **Sweden - Stockholm** Tel: 46-8-5090-4654 **UK - Wokingham** Tel: 44-118-921-5800 Fax: 44-118-921-5820