dsPIC33FJ32MC202/204 and dsPIC33FJ16MC304

16-bit Digital Signal Controllers (up to 32 KB Flash and 2 KB SRAM) with Motor Control and Advanced Analog

Operating Conditions

- 3.0V to 3.6V, -40ºC to +150ºC, DC to 20 MIPS
- 3.0V to 3.6V, -40ºC to +125ºC, DC to 40 MIPS

Core: 16-bit dsPIC33F CPU

- Code-efficient (C and Assembly) architecture
- Two 40-bit wide accumulators
- Single-cycle (MAC/MPY) with dual data fetch
- Single-cycle mixed-sign MUL plus hardware divide

Clock Management

- 2% internal oscillator
- Programmable PLLs and oscillator clock sources
- Fail-Safe Clock Monitor (FSCM)
- Independent Watchdog Timer (WDT)
- Fast wake-up and start-up

Power Management

- Low-power management modes (Sleep, Idle, Doze)
- Integrated Power-on Reset and Brown-out Reset
- 1.35 mA/MHz dynamic current (typical)
- 55 µA IPD current (typical)

High-Speed PWM

- Up to four PWM pairs with independent timing
- Dead time for rising and falling edges
- 12.5 ns PWM resolution
- PWM support for:
  - DC/DC, AC/DC, Inverters, PFC, Lighting
  - BLDC, PMSM, ACIM, SRM
- Programmable Fault inputs
- Flexible trigger configurations for ADC conversions

Advanced Analog Features

- ADC module:
  - Configurable as 10-bit, 1.1 Msps with four S&H or 12-bit, 500 ksps with one S&H
- Six analog inputs on 28-pin devices and up to nine analog inputs on 44-pin devices
- Flexible and independent ADC trigger sources

Timers/Output Compare/Input Capture

- Three 16-bit timers/counters. Can pair up two to make one 32-bit.
- Two Output Capture modules configurable as timers/counters
- Four Input Capture modules
- Peripheral Pin Select (PPS) to allow function remap

Communication Interfaces

- One UART module (10 Mbps)
- With support for LIN 2.0 protocols and IrDA®
- One 4-wire SPI module (15 Mbps)
- One I^2C™ module (up to 1 Mbaud) with SMBus support
- PPS to allow function remap

Input/Output

- Sink/Source up to 10 mA (pin specific) for standard VOH/VOL, up to 16 mA (pin specific) for non-standard VOH1
- 5V-tolerant pins
- Selectable open drain, pull-ups, and pull-downs
- Up to 5 mA overvoltage clamp current
- External interrupts on all I/O pins

Qualification and Class B Support

- AEC-Q100 REVG (Grade 0 -40ºC to +150ºC)
- Class B Safety Library, IEC 60730

Debugger Development Support

- In-circuit and in-application programming
- Two program and two complex data breakpoints
- IEEE 1149.2-compatible (JTAG) boundary scan
- Trace and run-time watch

Packages

Type	SPDIP	SOIC	SSOP	QFN-S	QFN	TQFP
Pin Count	28	28	28	28	44	44
Contact Lead/Pitch	.100"	1.27	0.65	0.65	0.65	0.80
I/O Pins	21	21	21	21	35	35
Dimensions	1.365x.285x.135"	17.9xx7.50x2.05	10.2x5.3x1.75	6x6x0.9	8x8x0.9	10x10x1

Note: All dimensions are in millimeters (mm) unless specified.

© 2007-2012 Microchip Technology Inc.

dsPIC33FJ32MC202/204 and dsPIC33FJ16MC304 Product Families

The device names, pin counts, memory sizes and peripheral availability of each device are listed below. The following pages show their pinout diagrams.

TABLE 1: dsPIC33FJ32MC202/204 and dsPIC33FJ16MC304 CONTROLLER FAMILIES

Device	Pins	Program Flash Memory (Kbyte)	RAM (Kbyte)	Remappable Peripherals									10-Bit/12-Bit ADC	I^2C™	I/O Pins	Packages
				Remappable Pins	16-bit Timer	Input Capture	Output Compare Standard PWM	Motor Control PWM	Quadrature Encoder Interface	UART	External Interrupts(3)	SPI				
dsPIC33FJ32MC202	28	32	2	16	3(1)	4	2	6ch(2) 2ch(2)	1	1	3	1	1ADC, 6 ch	1	21	SPDIP SOIC SSOP QFN-S
dsPIC33FJ32MC204	44	32	2	26	3(1)	4	2	6ch(2) 2ch(2)	1	1	3	1	1ADC, 9 ch	1	35	QFN TQFP
dsPIC33FJ16MC304	44	16	2	26	3(1)	4	2	6ch(2) 2ch(2)	1	1	3	1	1ADC, 9 ch	1	35	QFN TQFP

Note 1: Only two out of three timers are remappable.
2: Only PWM fault inputs are remappable.
3: Only two out of three interrupts are remappable.

© 2007-2012 Microchip Technology Inc.

Pin Diagrams

28-PIN SPDIP, SOIC, SSOP

■ = Pins are up to 5V tolerant

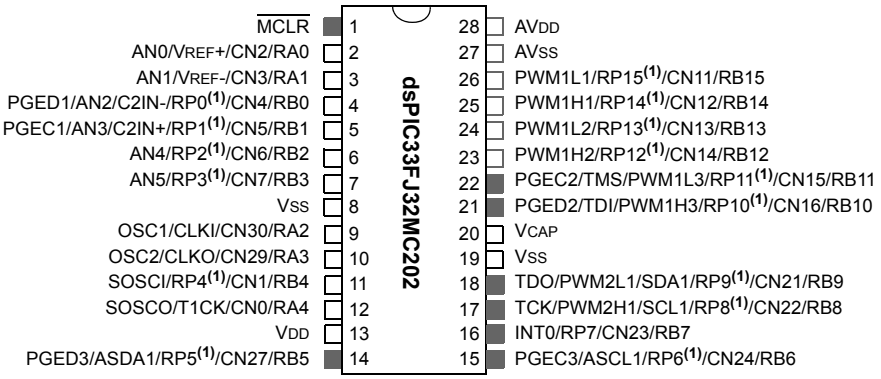

28-Pin QFN-S(2)

■ = Pins are up to 5V tolerant

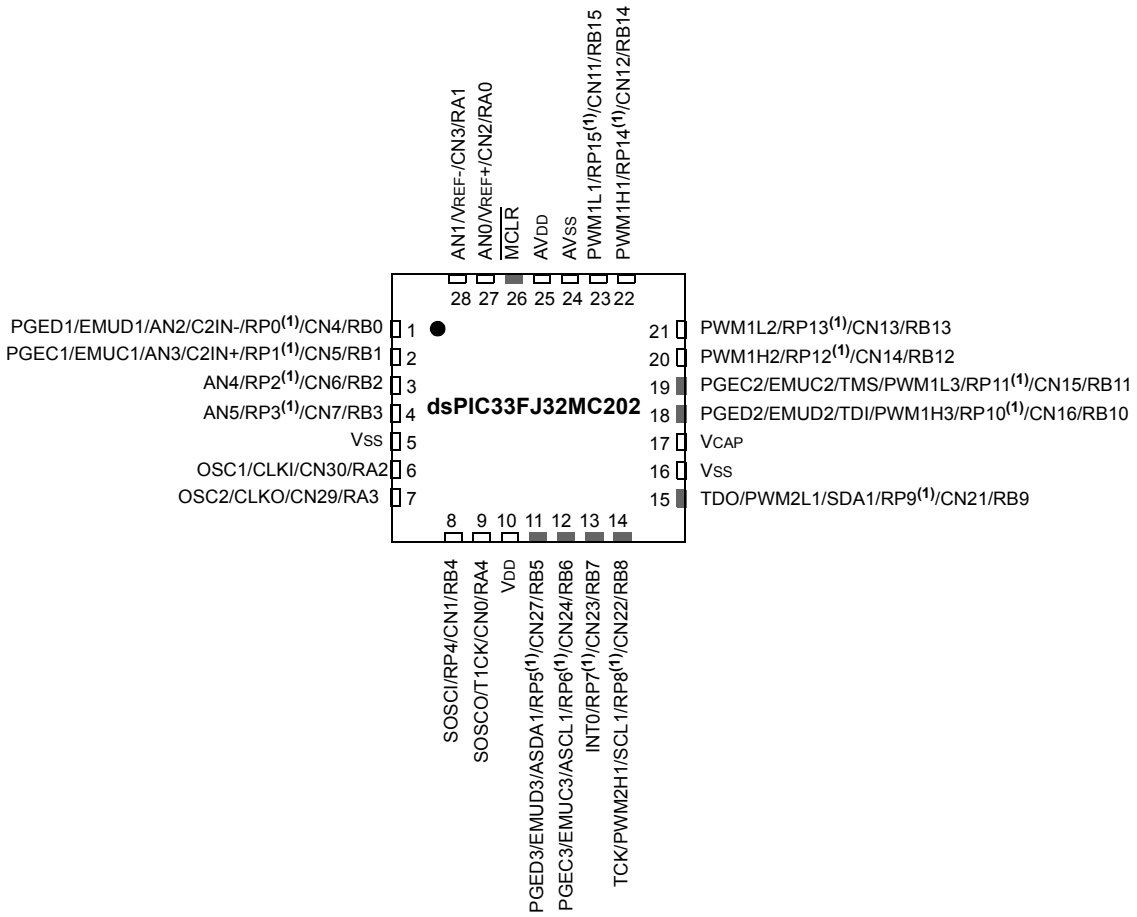

Note 1: The RPn pins can be used by any remappable peripheral. See Table 1 for the list of available peripherals.

2: The metal plane at the bottom of the device is not connected to any pins and is recommended to be connected to VSS externally.

Pin Diagrams (Continued)

44-Pin QFN(2)

■ = Pins are up to 5V tolerant

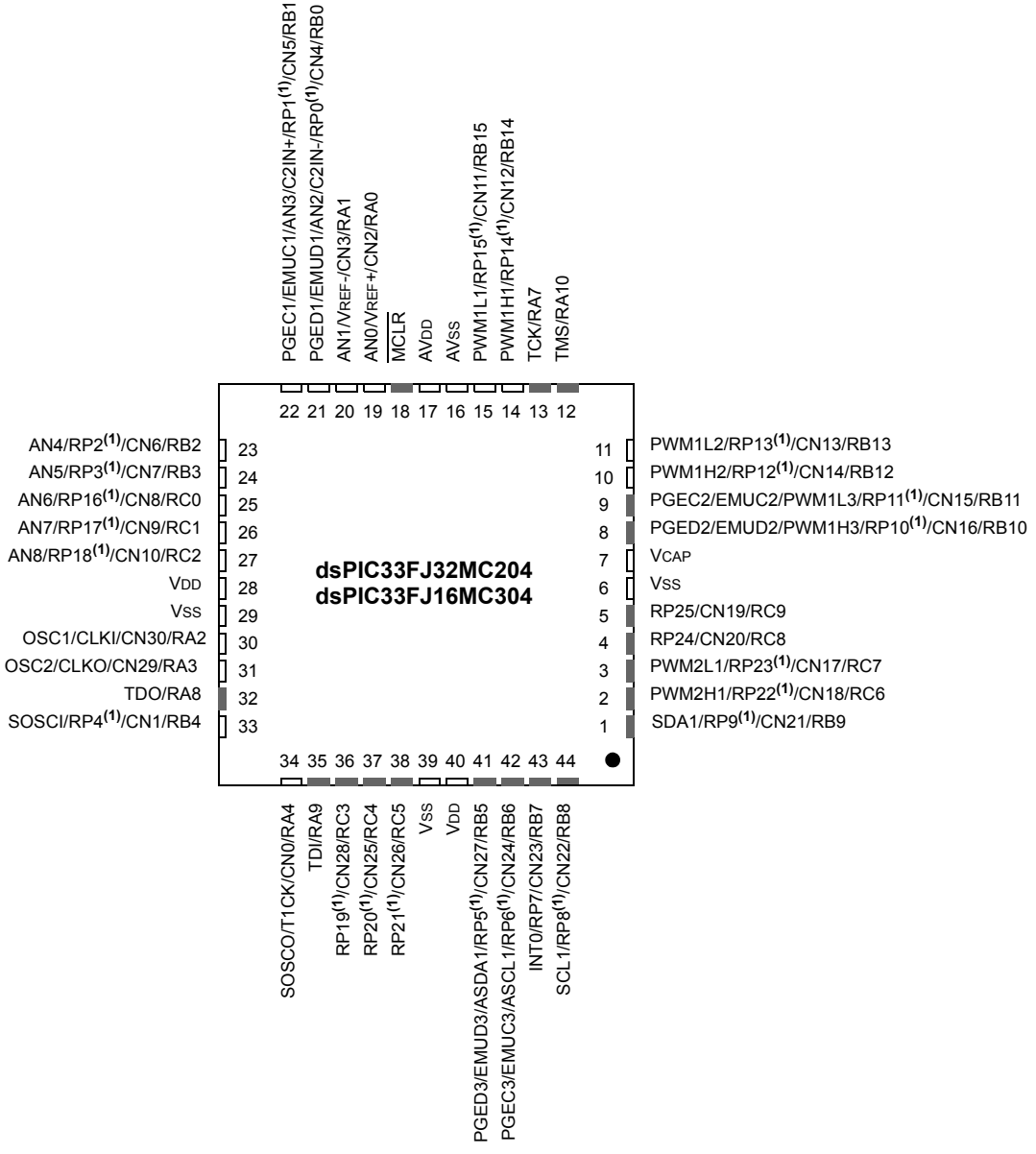

Note 1: The RPn pins can be used by any remappable peripheral. See Table 1 for the list of available peripherals.

2: The metal plane at the bottom of the device is not connected to any pins and is recommended to be connected to VSS externally.

© 2007-2012 Microchip Technology Inc.

Pin Diagrams (Continued)

44-Pin TQFP

■ = Pins are up to 5V tolerant

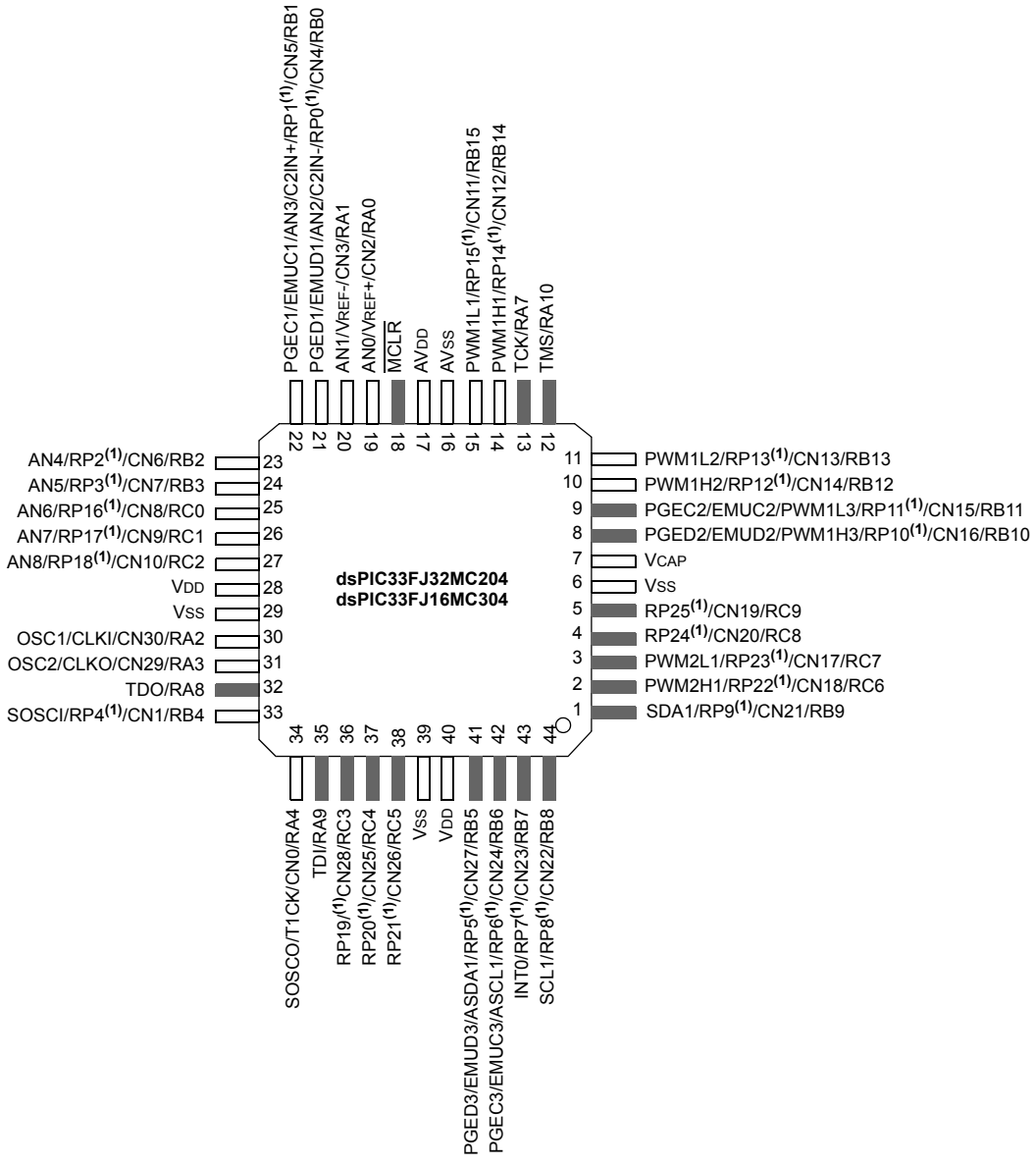

Note 1: The RPn pins can be used by any remappable peripheral. See Table 1 for the list of available peripherals.

Table of Contents

dsPIC33FJ32MC202/204 and dsPIC33FJ16MC304 Product Families 2
1.0 Device Overview 9
2.0 Guidelines for Getting Started with 16-bit Digital Signal Controllers 13
3.0 CPU 17
4.0 Memory Organization 29
5.0 Flash Program Memory 55
6.0 Resets 61
7.0 Interrupt Controller 71
8.0 Oscillator Configuration 101
9.0 Power-Saving Features 111
10.0 I/O Ports 117
11.0 Timer1 143
12.0 Timer2/3 feature 147
13.0 Input Capture 151
14.0 Output Compare 155
15.0 Motor Control PWM Module 159
16.0 Quadrature Encoder Interface (QEI) Module 173
17.0 Serial Peripheral Interface (SPI) 179
18.0 Inter-Integrated Circuit™ (I^2C™) 185
19.0 Universal Asynchronous Receiver Transmitter (UART) 193
20.0 10-bit/12-bit Analog-to-Digital Converter (ADC) 199
21.0 Special Features 211
22.0 Instruction Set Summary 219
23.0 Development Support 227
24.0 Electrical Characteristics 231
25.0 High Temperature Electrical Characteristics 281
26.0 DC and AC Device Characteristics Graphs 291
27.0 Packaging Information 295
Appendix A: Revision History 309
Index 321
The Microchip Web Site 325
Customer Change Notification Service 325
Customer Support 325
Reader Response 326
Product Identification System 327

© 2007-2012 Microchip Technology Inc.

TO OUR VALUED CUSTOMERS

It is our intention to provide our valued customers with the best documentation possible to ensure successful use of your Microchip products. To this end, we will continue to improve our publications to better suit your needs. Our publications will be refined and enhanced as new volumes and updates are introduced.

If you have any questions or comments regarding this publication, please contact the Marketing Communications Department via E-mail at **docerrors@microchip.com** or fax the **Reader Response Form** in the back of this data sheet to (480) 792-4150. We welcome your feedback.

Most Current Data Sheet

To obtain the most up-to-date version of this data sheet, please register at our Worldwide Web site at:

http://www.microchip.com

You can determine the version of a data sheet by examining its literature number found on the bottom outside corner of any page. The last character of the literature number is the version number, (e.g., DS30000A is version A of document DS30000).

Errata

An errata sheet, describing minor operational differences from the data sheet and recommended workarounds, may exist for current devices. As device/documentation issues become known to us, we will publish an errata sheet. The errata will specify the revision of silicon and revision of document to which it applies.

To determine if an errata sheet exists for a particular device, please check with one of the following:

- Microchip's Worldwide Web site; **http://www.microchip.com**
- Your local Microchip sales office (see last page)

When contacting a sales office, please specify which device, revision of silicon and data sheet (include literature number) you are using.

Customer Notification System

Register on our web site at **www.microchip.com** to receive the most current information on all of our products

Referenced Sources

This device data sheet is based on the following individual chapters of the *"dsPIC33F/PIC24H Family Reference Manual"*. These documents should be considered as the general reference for the operation of a particular module or device feature.

Note 1: To access the documents listed below, browse to the documentation section of the dsPIC33FJ32MC204 product page of the Microchip web site (www.microchip.com) or select a family reference manual section from the following list.

In addition to parameters, features, and other documentation, the resulting page provides links to the related family reference manual sections.

- **Section 1. "Introduction"** (DS70197)
- **Section 2. "CPU"** (DS70204)
- **Section 3. "Data Memory"** (DS70202)
- **Section 4. "Program Memory"** (DS70202)
- **Section 5. "Flash Programming"** (DS70191)
- **Section 7. "Oscillator"** (DS70186)
- **Section 8. "Reset"** (DS70192)
- **Section 9. "Watchdog Timer and Power-Saving Modes"** (DS70196)
- **Section 10. "I/O Ports"** (DS70193)
- **Section 11. "Timers"** (DS70205)
- **Section 12. "Input Capture"** (DS70198)
- **Section 13. "Output Compare"** (DS70209)
- **Section 14. "Motor Control PWM"** (DS70187)
- **Section 15. "Quadrature Encoder Interface (QEI)"** (DS70208)
- **Section 16. "Analog-to-Digital Converter (ADC)"** (DS70183)
- **Section 17. "UART"** (DS70188)
- **Section 18. "Serial Peripheral Interface (SPI)"** (DS70206)
- **Section 19. "Inter-Integrated Circuit™ (I^2C™)"** (DS70195)
- **Section 23. "CodeGuard™ Security"** (DS70199)
- **Section 25. "Device Configuration"** (DS70194)
- **Section 32. "Interrupts (Part III)"** (DS70214)

© 2007-2012 Microchip Technology Inc.

1.0 DEVICE OVERVIEW

Note 1: This data sheet summarizes the features of the dsPIC33FJ32MC202/204 and dsPIC33FJ16MC304 devices. It is not intended to be a comprehensive reference source. To complement the information in this data sheet, refer to the *"dsPIC33F/PIC24H Family Reference Manual"*. Please see the Microchip web site (www.microchip.com) for the latest dsPIC33F/PIC24H Family Reference Manual sections.

2: Some registers and associated bits described in this section may not be available on all devices. Refer to **Section 4.0 "Memory Organization"** in this data sheet for device-specific register and bit information.

This document contains device-specific information for the following Digital Signal Controller (DSC) devices:

- dsPIC33FJ32MC202
- dsPIC33FJ32MC204
- dsPIC33FJ16MC304

The dsPIC33F devices contain extensive Digital Signal Processor (DSP) functionality with a high performance 16-bit microcontroller (MCU) architecture.

Figure 1-1 shows a general block diagram of the core and peripheral modules in the dsPIC33FJ32MC202/204 and dsPIC33FJ16MC304 family of devices. Table 1-1 lists the functions of the various pins shown in the pinout diagrams.

FIGURE 1-1: dsPIC33FJ32MC202/204 and dsPIC33FJ16MC304 BLOCK DIAGRAM

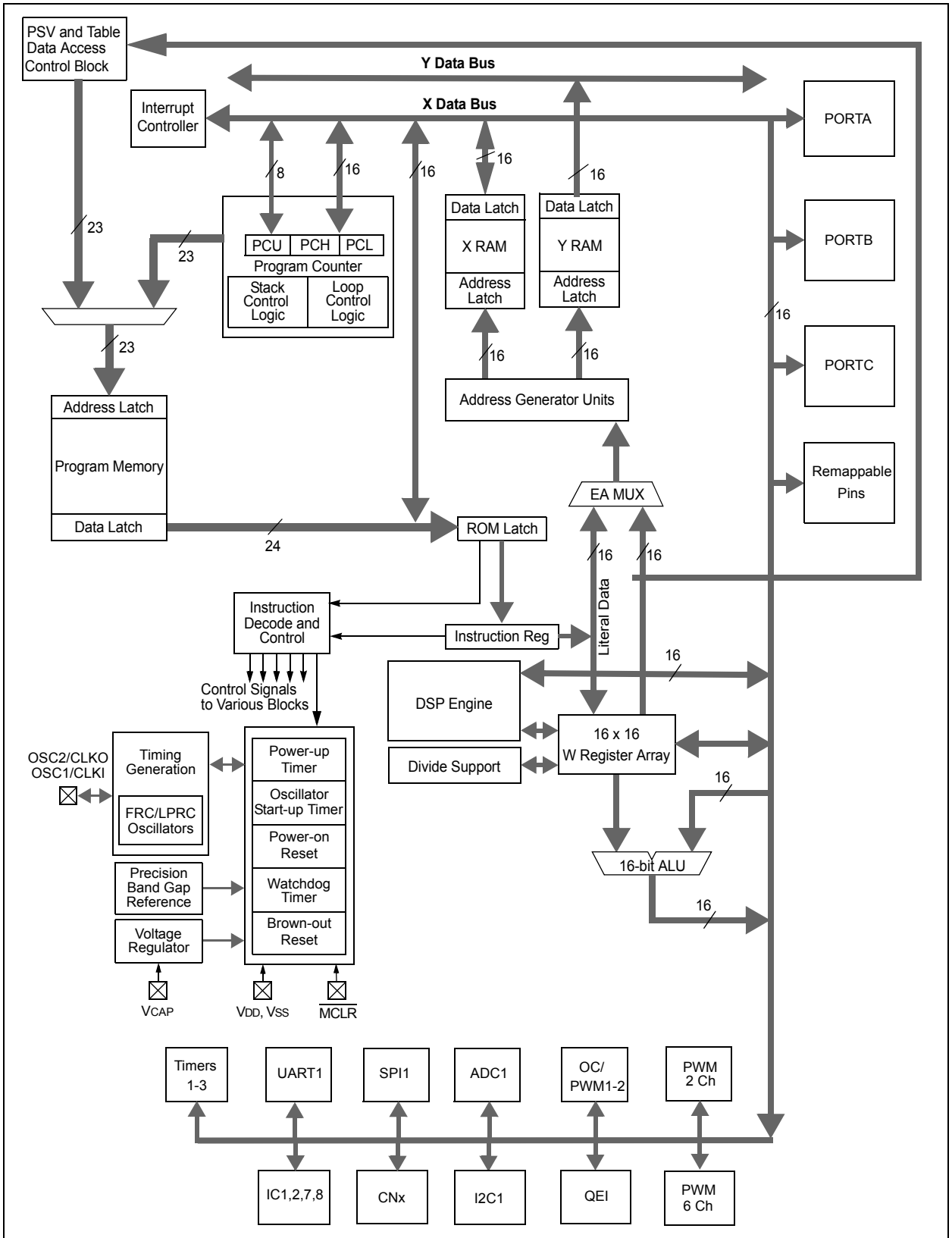

Note: Not all pins or features are implemented on all device pinout configurations. See "Pin Diagrams" for the specific pins and features present on each device.

© 2007-2012 Microchip Technology Inc.

TABLE 1-1: PINOUT I/O DESCRIPTIONS

Pin Name	Pin Type	Buffer Type	PPS	Description
AN0-AN8	I	Analog	No	Analog input channels.
CLKI	I	ST/CMOS	No	External clock source input. Always associated with OSC1 pin function.
CLKO	O	—	No	Oscillator crystal output. Connects to crystal or resonator in Crystal Oscillator mode. Optionally functions as CLKO in RC and EC modes. Always associated with OSC2 pin function.
OSC1	I	ST/CMOS	No	Oscillator crystal input. ST buffer when configured in RC mode; CMOS otherwise.
OSC2	I/O	—	No	Oscillator crystal output. Connects to crystal or resonator in Crystal Oscillator mode. Optionally functions as CLKO in RC and EC modes.
SOSCI	I	ST/CMOS	No	32.768 kHz low-power oscillator crystal input; CMOS otherwise.
SOSCO	O	—	No	32.768 kHz low-power oscillator crystal output.
CN0-CN30	I	ST	No	Change notification inputs. Can be software programmed for internal weak pull-ups on all inputs.
IC1-IC2	I	ST	Yes	Capture inputs 1/2.
IC7-IC8	I	ST	Yes	Capture inputs 7/8.
OCFA	I	ST	Yes	Compare Fault A input (for Compare Channels 1 and 2).
OC1-OC2	O	—	Yes	Compare outputs 1 through 2.
INT0	I	ST	No	External interrupt 0.
INT1	I	ST	Yes	External interrupt 1.
INT2	I	ST	Yes	External interrupt 2.
RA0-RA4	I/O	ST	No	PORTA is a bidirectional I/O port.
RA7-RA10			No	
RB0-RB15	I/O	ST	No	PORTB is a bidirectional I/O port.
RC0-RC9	I/O	ST	No	PORTC is a bidirectional I/O port.
T1CK	I	ST	No	Timer1 external clock input.
T2CK	I	ST	Yes	Timer2 external clock input.
T3CK	I	ST	Yes	Timer3 external clock input.
$\overline{\text{U1CTS}}$	I	ST	Yes	UART1 clear to send.
$\overline{\text{U1RTS}}$	O	—	Yes	UART1 ready to send.
U1RX	I	ST	Yes	UART1 receive.
U1TX	O	—	Yes	UART1 transmit.
SCK1	I/O	ST	Yes	Synchronous serial clock input/output for SPI1.
SDI1	I	ST	Yes	SPI1 data in.
SDO1	O	—	Yes	SPI1 data out.
$\overline{\text{SS1}}$	I/O	ST	Yes	SPI1 slave synchronization or frame pulse I/O.
SCL1	I/O	ST	No	Synchronous serial clock input/output for I2C1.
SDA1	I/O	ST	No	Synchronous serial data input/output for I2C1.
ASCL1	I/O	ST	No	Alternate synchronous serial clock input/output for I2C1.
ASDA1	I/O	ST	No	Alternate synchronous serial data input/output for I2C1.
TMS	I	ST	No	JTAG Test mode select pin.
TCK	I	ST	No	JTAG test clock input pin.
TDI	I	ST	No	JTAG test data input pin.
TDO	O	—	No	JTAG test data output pin.

Legend: CMOS = CMOS compatible input or output; Analog = Analog input; P = Power
ST = Schmitt Trigger input with CMOS levels; O = Output; I = Input
PPS = Peripheral Pin Select

TABLE 1-1: PINOUT I/O DESCRIPTIONS (CONTINUED)

Pin Name	Pin Type	Buffer Type	PPS	Description
INDX	I	ST	Yes	Quadrature Encoder Index Pulse input.
QEA	I	ST	Yes	Quadrature Encoder Phase A input in QEI mode. Auxiliary Timer External Clock/Gate input in Timer mode.
QEB	I	ST	Yes	Quadrature Encoder Phase A input in QEI mode. Auxiliary Timer External Clock/Gate input in Timer mode.
UPDN	O	CMOS	Yes	Position Up/Down Counter Direction State.
$\overline{\text{FLTA1}}$	I	ST	Yes	PWM1 Fault A input.
PWM1L1	O	—	No	PWM1 Low output 1.
PWM1H1	O	—	No	PWM1 High output 1.
PWM1L2	O	—	No	PWM1 Low output 2.
PWM1H2	O	—	No	PWM1 High output 2.
PWM1L3	O	—	No	PWM1 Low output 3.
PWM1H3	O	—	No	PWM1 High output 3.
$\overline{\text{FLTA2}}$	I	ST	Yes	PWM2 Fault A input.
PWM2L1	O	—	No	PWM2 Low output 1.
PWM2H1	O	—	No	PWM2 High output 1.
PGED1	I/O	ST	No	Data I/O pin for programming/debugging communication channel 1.
PGEC1	I	ST	No	Clock input pin for programming/debugging communication channel 1.
PGED2	I/O	ST	No	Data I/O pin for programming/debugging communication channel 2.
PGEC2	I	ST	No	Clock input pin for programming/debugging communication channel 2.
PGED3	I/O	ST	No	Data I/O pin for programming/debugging communication channel 3.
PGEC3	I	ST	No	Clock input pin for programming/debugging communication channel 3.
$\overline{\text{MCLR}}$	I/P	ST	No	Master Clear (Reset) input. This pin is an active-low Reset to the device.
AVDD	P	P	No	Positive supply for analog modules. This pin must be connected at all times.
AVSS	P	P	No	Ground reference for analog modules.
V_{DD}	P	—	No	Positive supply for peripheral logic and I/O pins.
V_{CAP}	P	—	No	CPU logic filter capacitor connection.
V_{SS}	P	—	No	Ground reference for logic and I/O pins.
V_{REF+}	I	Analog	No	Analog voltage reference (high) input.
V_{REF-}	I	Analog	No	Analog voltage reference (low) input.

Legend: CMOS = CMOS compatible input or output; Analog = Analog input; P = Power
ST = Schmitt Trigger input with CMOS levels; O = Output; I = Input
PPS = Peripheral Pin Select

© 2007-2012 Microchip Technology Inc.

2.0 GUIDELINES FOR GETTING STARTED WITH 16-BIT DIGITAL SIGNAL CONTROLLERS

Note 1: This data sheet summarizes the features of the dsPIC33FJ32MC202/204 and dsPIC33FJ16MC304 family of devices. It is not intended to be a comprehensive reference source. To complement the information in this data sheet, refer to the *"dsPIC33F/PIC24H Family Reference Manual"*, which is available from the Microchip web site (www.microchip.com).

2: Some registers and associated bits described in this section may not be available on all devices. Refer to **Section 4.0 "Memory Organization"** in this data sheet for device-specific register and bit information.

2.1 Basic Connection Requirements

Getting started with the dsPIC33FJ32MC202/204 and dsPIC33FJ16MC304 family of 16-bit Digital Signal Controllers (DSCs) requires attention to a minimal set of device pin connections before proceeding with development. The following is a list of pin names, which must always be connected:

- All VDD and VSS pins
  (see **Section 2.2 "Decoupling Capacitors"**)
- All AVDD and AVSS pins (even if the ADC module is not used)
  (see **Section 2.2 "Decoupling Capacitors"**)
- VCAP
  (see **Section 2.3 "CPU Logic Filter Capacitor Connection (VCAP)"**)
- $\overline{\text{MCLR}}$ pin
  (see **Section 2.4 "Master Clear (MCLR) Pin"**)
- PGECx/PGEDx pins used for In-Circuit Serial Programming™ (ICSP™) and debugging purposes
  (see **Section 2.5 "ICSP Pins"**)
- OSC1 and OSC2 pins when external oscillator source is used
  (see **Section 2.6 "External Oscillator Pins"**)

Additionally, the following pins may be required:

- VREF+/VREF- pins used when external voltage reference for ADC module is implemented

Note: The AVDD and AVSS pins must be connected independent of the ADC voltage reference source.

2.2 Decoupling Capacitors

The use of decoupling capacitors on every pair of power supply pins, such as VDD, VSS, AVDD and AVSS is required.

Consider the following criteria when using decoupling capacitors:

- **Value and type of capacitor:** Recommendation of 0.1 µF (100 nF), 10-20V. This capacitor should be a low-ESR and have a resonance frequency in the range of 20 MHz and higher. It is recommended that ceramic capacitors be used.
- **Placement on the printed circuit board:** The decoupling capacitors should be placed as close to the pins as possible. It is recommended to place the capacitors on the same side of the board as the device. If space is constricted, the capacitor can be placed on another layer on the PCB using a via; however, ensure that the trace length from the pin to the capacitor is within one-quarter inch (6 mm) in length.
- **Handling high frequency noise:** If the board is experiencing high frequency noise, upward of tens of MHz, add a second ceramic-type capacitor in parallel to the above described decoupling capacitor. The value of the second capacitor can be in the range of 0.01 µF to 0.001 µF. Place this second capacitor next to the primary decoupling capacitor. In high-speed circuit designs, consider implementing a decade pair of capacitances as close to the power and ground pins as possible. For example, 0.1 µF in parallel with 0.001 µF.
- **Maximizing performance:** On the board layout from the power supply circuit, run the power and return traces to the decoupling capacitors first, and then to the device pins. This ensures that the decoupling capacitors are first in the power chain. Equally important is to keep the trace length between the capacitor and the power pins to a minimum thereby reducing PCB track inductance.

FIGURE 2-1: RECOMMENDED MINIMUM CONNECTION

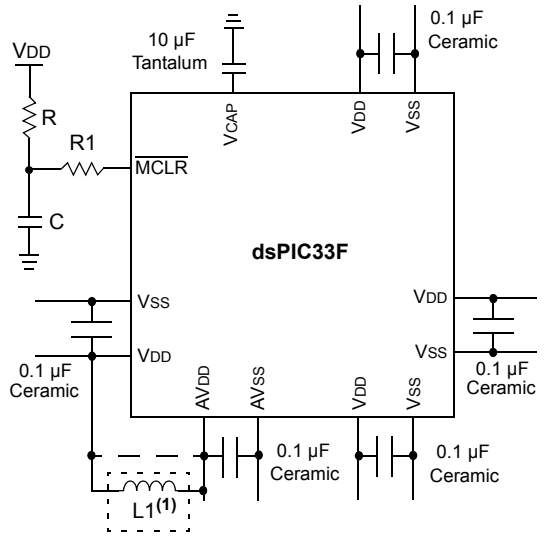

Note 1: As an option, instead of a hard-wired connection, an inductor (L1) can be substituted between VDD and AVDD to improve ADC noise rejection. The inductor impedance should be less than 1Ω and the inductor capacity greater than 10 mA.

Where:

$$f = \frac{FCNV}{2} \quad \text{(i.e., ADC conversion rate/2)}$$

$$f = \frac{1}{(2\pi\sqrt{LC})}$$

$$L = \left(\frac{1}{(2\pi f\sqrt{C})}\right)^2$$

2.2.1 TANK CAPACITORS

On boards with power traces running longer than six inches in length, it is suggested to use a tank capacitor for integrated circuits including DSCs to supply a local power source. The value of the tank capacitor should be determined based on the trace resistance that connects the power supply source to the device, and the maximum current drawn by the device in the application. In other words, select the tank capacitor so that it meets the acceptable voltage sag at the device. Typical values range from 4.7 µF to 47 µF.

2.3 CPU Logic Filter Capacitor Connection (VCAP)

A low-ESR (<5 Ohms) capacitor is required on the VCAP pin, which is used to stabilize the voltage regulator output voltage. The VCAP pin must not be connected to VDD, and must have a capacitor between 4.7 µF and 10 µF, 16V connected to ground. The type can be ceramic or tantalum. Refer to **Section 24.0 "Electrical Characteristics"** for additional information.

The placement of this capacitor should be close to the VCAP. It is recommended that the trace length not exceed one-quarter inch (6 mm). Refer to **Section 21.2 "On-Chip Voltage Regulator"** for details.

2.4 Master Clear (MCLR) Pin

The MCLR pin provides for two specific device functions:

- Device Reset
- Device programming and debugging

During device programming and debugging, the resistance and capacitance that can be added to the pin must be considered. Device programmers and debuggers drive the MCLR pin. Consequently, specific voltage levels (VIH and VIL) and fast signal transitions must not be adversely affected. Therefore, specific values of R and C will need to be adjusted based on the application and PCB requirements.

For example, as shown in Figure 2-2, it is recommended that capacitor C is isolated from the MCLR pin during programming and debugging operations.

Place the components shown in Figure 2-2 within one-quarter inch (6 mm) from the MCLR pin.

FIGURE 2-2: EXAMPLE OF MCLR PIN CONNECTIONS

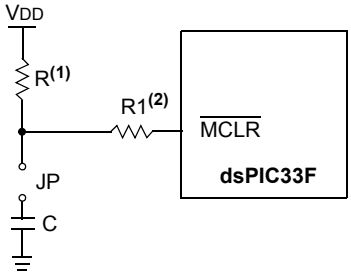

Note 1: R ≤ 10 kΩ is recommended. A suggested starting value is 10 kΩ Ensure that the MCLR pin VIH and VIL specifications are met.

2: R1 ≤ 470W will limit any current flowing into MCLR from the external capacitor C, in the event of MCLR pin breakdown, due to Electrostatic Discharge (ESD) or Electrical Overstress (EOS). Ensure that the MCLR pin VIH and VIL specifications are met.

© 2007-2012 Microchip Technology Inc.

2.5 ICSP Pins

The PGECx and PGEDx pins are used for In-Circuit Serial Programming (ICSP) and debugging purposes. It is recommended to keep the trace length between the ICSP connector and the ICSP pins on the device as short as possible. If the ICSP connector is expected to experience an ESD event, a series resistor is recommended, with the value in the range of a few tens of Ohms, not to exceed 100 Ohms.

Pull-up resistors, series diodes and capacitors on the PGECx and PGEDx pins are not recommended as they will interfere with the programmer/debugger communications to the device. If such discrete components are an application requirement, they should be removed from the circuit during programming and debugging. Alternatively, refer to the AC/DC characteristics and timing requirements information in the respective device Flash programming specification for information on capacitive loading limits and pin input voltage high (V_{IH}) and input low (V_{IL}) requirements.

Ensure that the "Communication Channel Select" (i.e., PGECx/PGEDx pins) programmed into the device matches the physical connections for the ICSP to MPLAB® ICD 3 or MPLAB REAL ICE™ in-circuit emulator.

For more information on MPLAB ICD 3 or MPLAB REAL ICE™ in-circuit emulator connection requirements, refer to the following documents that are available on the Microchip web site.

- *"Using MPLAB® ICD 3"* (poster) DS51765
- *"MPLAB® ICD 3 Design Advisory"* DS51764
- *"MPLAB® REAL ICE™ In-Circuit Emulator User's Guide"* DS51616
- *"Using MPLAB® REAL ICE™ In-Circuit Emulator"* (poster) DS51749

2.6 External Oscillator Pins

Many DSCs have options for at least two oscillators: a high-frequency primary oscillator and a low-frequency secondary oscillator (refer to **Section 8.0 "Oscillator Configuration"** for details).

The oscillator circuit should be placed on the same side of the board as the device. Also, place the oscillator circuit close to the respective oscillator pins, not exceeding one-half inch (12 mm) distance between them. The load capacitors should be placed next to the oscillator itself, on the same side of the board. Use a grounded copper pour around the oscillator circuit to isolate them from surrounding circuits. The grounded copper pour should be routed directly to the MCU ground. Do not run any signal traces or power traces inside the ground pour. Also, if using a two-sided board, avoid any traces on the other side of the board where the crystal is placed. A suggested layout is shown in Figure 2-3.

FIGURE 2-3: SUGGESTED PLACEMENT OF THE OSCILLATOR CIRCUIT

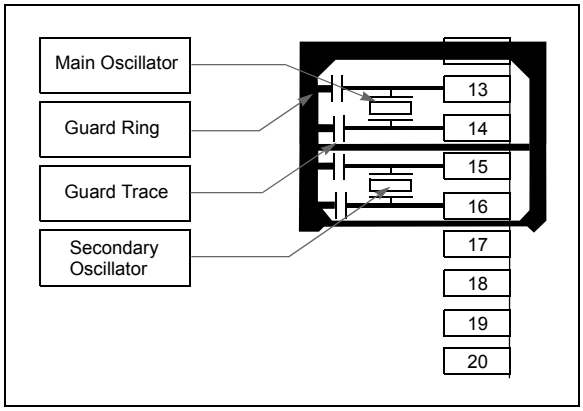

2.7 Oscillator Value Conditions on Device Start-up

If the PLL of the target device is enabled and configured for the device start-up oscillator, the maximum oscillator source frequency must be limited to ≤8 MHz for start-up with PLL enabled. This means that if the external oscillator frequency is outside this range, the application must start-up in FRC mode first. The default PLL settings after a POR with an oscillator frequency outside this range will violate the device operating speed.

Once the device powers up, the application firmware can initialize the PLL SFRs, CLKDIV and PLLDBF to a suitable value, and then perform a clock switch to the Oscillator + PLL clock source. Note that clock switching must be enabled in the device Configuration word.

2.8 Configuration of Analog and Digital Pins During ICSP Operations

If MPLAB ICD 2, MPLAB ICD 3 or MPLAB REAL ICE™ in-circuit emulator is selected as a debugger, it automatically initializes all of the A/D input pins (ANx) as “digital” pins, by setting all bits in the AD1PCFGL register.

The bits in the registers that correspond to the A/D pins that are initialized by MPLAB ICD 3 or MPLAB REAL ICE™ in-circuit emulator, must not be cleared by the user application firmware; otherwise, communication errors will result between the debugger and the device.

If your application needs to use certain A/D pins as analog input pins during the debug session, the user application must clear the corresponding bits in the AD1PCFGL register during initialization of the ADC module.

When MPLAB ICD 3 or MPLAB REAL ICE™ in-circuit emulator is used as a programmer, the user application firmware must correctly configure the AD1PCFGL register. Automatic initialization of this register is only done during debugger operation. Failure to correctly configure the register(s) will result in all A/D pins being recognized as analog input pins, resulting in the port value being read as a logic ‘0’, which may affect user application functionality.

2.9 Unused I/Os

Unused I/O pins should be configured as outputs and driven to a logic-low state.

Alternatively, connect a 1k to 10k resistor between V_{SS} and the unused pins.

© 2007-2012 Microchip Technology Inc.

3.0 CPU

Note 1: This data sheet summarizes the features of the dsPIC33FJ32MC202/204 and dsPIC33FJ16MC304 family of devices. It is not intended to be a comprehensive reference source. To complement the information in this data sheet, refer to **Section 2. "CPU"** (DS70204) of the *"dsPIC33F/PIC24H Family Reference Manual"*, which is available from the Microchip web site (www.microchip.com).

2: Some registers and associated bits described in this section may not be available on all devices. Refer to **Section 4.0 "Memory Organization"** in this data sheet for device-specific register and bit information.

The dsPIC33FJ32MC202/204 and dsPIC33FJ16MC304 CPU module has a 16-bit (data) modified Harvard architecture with an enhanced instruction set, including significant support for DSP. The CPU has a 24-bit instruction word with a variable length opcode field. The Program Counter (PC) is 23 bits wide and addresses up to 4M x 24 bits of user program memory space. The actual amount of program memory implemented varies by device. A single-cycle instruction prefetch mechanism is used to help maintain throughput and provides predictable execution. All instructions execute in a single cycle, with the exception of instructions that change the program flow, the double-word move (`MOV.D`) instruction and the table instructions. Overhead-free program loop constructs are supported using the `DO` and `REPEAT` instructions, both of which are interruptible at any point.

The dsPIC33FJ32MC202/204 and dsPIC33FJ16MC304 devices have sixteen, 16-bit working registers in the programmer's model. Each of the working registers can serve as a data, address or address offset register. The 16th working register (W15) operates as a software Stack Pointer (SP) for interrupts and calls.

There are two classes of instruction in the dsPIC33FJ32MC202/204 and dsPIC33FJ16MC304 devices: MCU and DSP. These two instruction classes are seamlessly integrated into a single CPU. The instruction set includes many addressing modes and is designed for optimum C compiler efficiency. For most instructions, the dsPIC33FJ32MC202/204 and dsPIC33FJ16MC304 is capable of executing a data (or program data) memory read, a working register (data) read, a data memory write and a program (instruction) memory read per instruction cycle. As a result, three parameter instructions can be supported, allowing A + B = C operations to be executed in a single cycle.

A block diagram of the CPU is shown in Figure 3-1, and the programmer's model for the dsPIC33FJ32MC202/204 and dsPIC33FJ16MC304 is shown in Figure 3-2.

3.1 Data Addressing Overview

The data space can be addressed as 32K words or 64 Kbytes and is split into two blocks, referred to as X and Y data memory. Each memory block has its own independent Address Generation Unit (AGU). The MCU class of instructions operates solely through the X memory AGU, which accesses the entire memory map as one linear data space. Certain DSP instructions operate through the X and Y AGUs to support dual operand reads, which splits the data address space into two parts. The X and Y data space boundary is device-specific.

Overhead-free circular buffers (Modulo Addressing mode) are supported in both X and Y address spaces. The Modulo Addressing removes the software boundary checking overhead for DSP algorithms. Furthermore, the X AGU circular addressing can be used with any of the MCU class of instructions. The X AGU also supports Bit-Reversed Addressing to greatly simplify input or output data reordering for radix-2 FFT algorithms.

The upper 32 Kbytes of the data space memory map can optionally be mapped into program space at any 16K program word boundary defined by the 8-bit Program Space Visibility Page register (PSVPAG). The program-to-data-space mapping feature lets any instruction access program space as if it were data space.

3.2 DSP Engine Overview

The DSP engine features a high-speed 17-bit by 17-bit multiplier, a 40-bit ALU, two 40-bit saturating accumulators and a 40-bit bidirectional barrel shifter. The barrel shifter is capable of shifting a 40-bit value up to 16 bits right or left, in a single cycle. The DSP instructions operate seamlessly with all other instructions and have been designed for optimal real-time performance. The `MAC` instruction and other associated instructions can concurrently fetch two data operands from memory while multiplying two W registers and accumulating and optionally saturating the result in the same cycle. This instruction functionality requires that the RAM data space be split for these instructions and linear for all others. Data space partitioning is achieved in a transparent and flexible manner through dedicating certain working registers to each address space.

3.3 Special MCU Features

The dsPIC33FJ32MC202/204 and dsPIC33FJ16MC304 features a 17-bit by 17-bit single-cycle multiplier that is shared by both the MCU ALU and DSP engine. The multiplier can perform signed, unsigned and mixed-sign multiplication. Using a 17-bit by 17-bit multiplier for 16-bit by 16-bit multiplication not only allows you to perform mixed-sign multiplication, it also achieves accurate results for special operations, such as (-1.0) x (-1.0).

The dsPIC33FJ32MC202/204 and dsPIC33FJ16MC304 supports 16/16 and 32/16 divide operations, both fractional and integer. All divide instructions are iterative operations. They must be executed within a `REPEAT` loop, resulting in a total execution time of 19 instruction cycles. The divide operation can be interrupted during any of those 19 cycles without loss of data.

A 40-bit barrel shifter is used to perform up to a 16-bit left or right shift in a single cycle. The barrel shifter can be used by both MCU and DSP instructions.

FIGURE 3-1: dsPIC33FJ32MC202/204 and dsPIC33FJ16MC304 CPU CORE BLOCK DIAGRAM

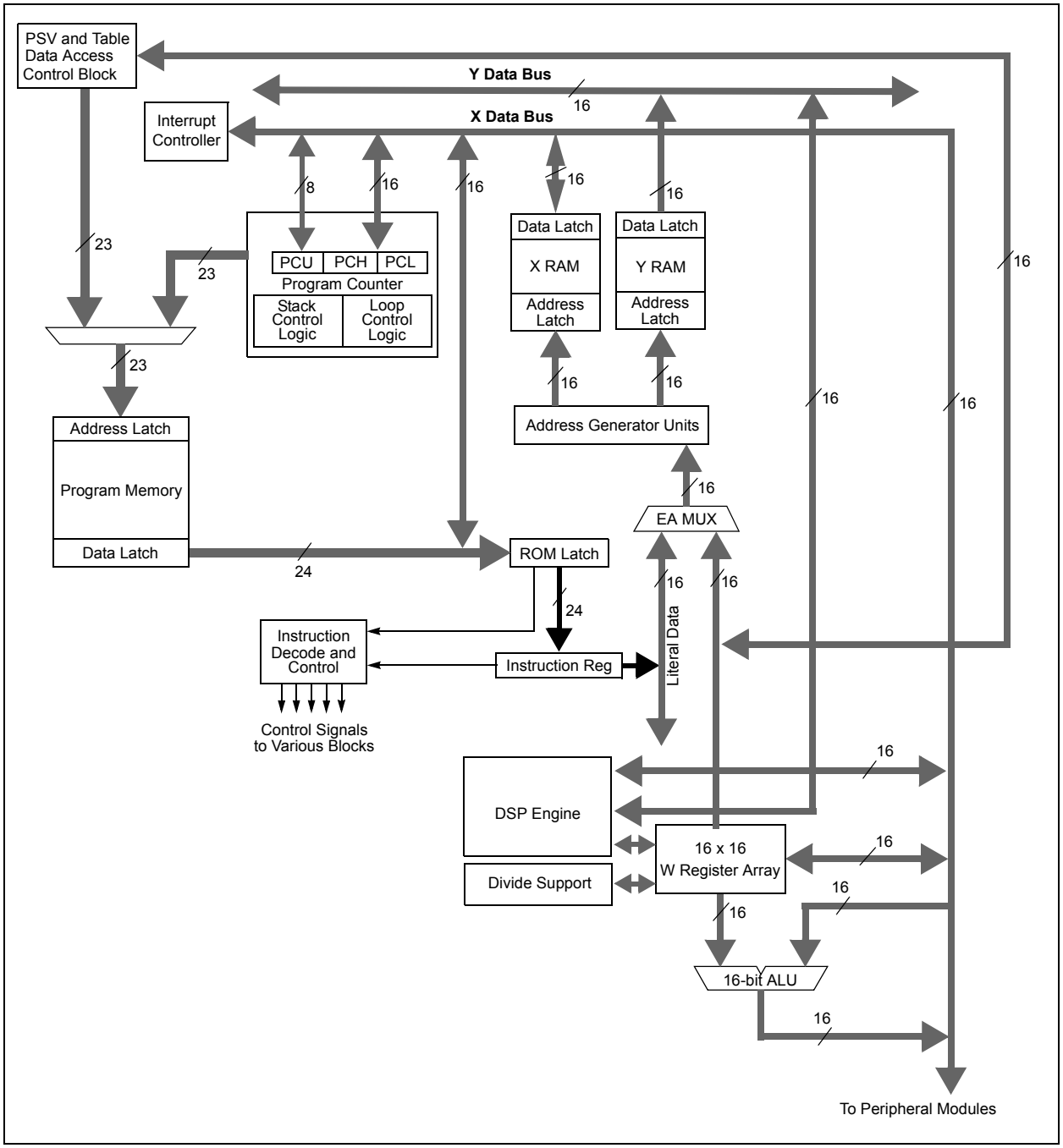

© 2007-2012 Microchip Technology Inc.

FIGURE 3-2: dsPIC33FJ32MC202/204 and dsPIC33FJ16MC304 PROGRAMMER'S MODEL

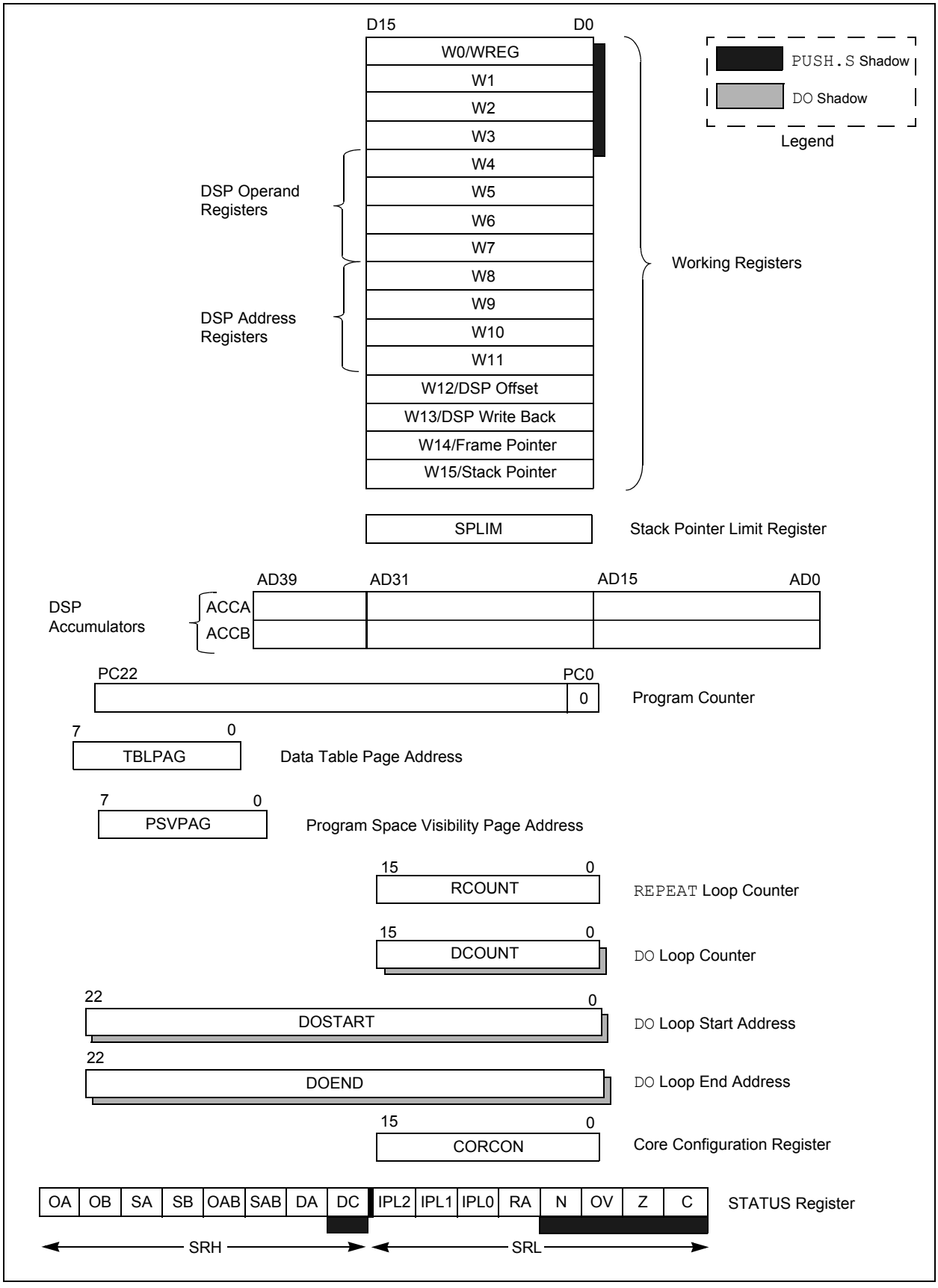

3.4 CPU Resources

Many useful resources are provided on the main product page of the Microchip web site for the devices listed in this data sheet. This product page, which can be accessed using this link, contains the latest updates and additional information.

Note:	In the event you are not able to access the product page using the link above, enter this URL in your browser: http://www.microchip.com/wwwproducts/Devices.aspx?dDocName=en530334

3.4.1 KEY RESOURCES

- **Section 2. "CPU"** (DS70204)
- Code Samples
- Application Notes
- Software Libraries
- Webinars
- All related dsPIC33F/PIC24H Family Reference Manuals Sections
- Development Tools

© 2007-2012 Microchip Technology Inc.

3.5 CPU Control Registers

REGISTER 3-1: SR: CPU STATUS REGISTER

R-0	R-0	R/C-0	R/C-0	R-0	R/C-0	R -0	R/W-0
OA	OB	SA(1)	SB(1)	OAB	SAB	DA	DC
bit 15							bit 8

R/W-0(3)	R/W-0(3)	R/W-0(3)	R-0	R/W-0	R/W-0	R/W-0	R/W-0
IPL<2:0>(2)			RA	N	OV	Z	C
bit 7							bit 0

Legend:		
C = Clear only bit	R = Readable bit	U = Unimplemented bit, read as ‘0’
S = Set only bit	W = Writable bit	-n = Value at POR
‘1’ = Bit is set	‘0’ = Bit is cleared	x = Bit is unknown

bit 15 **OA:** Accumulator A Overflow Status bit
1 = Accumulator A overflowed
0 = Accumulator A has not overflowed

bit 14 **OB:** Accumulator B Overflow Status bit
1 = Accumulator B overflowed
0 = Accumulator B has not overflowed

bit 13 **SA:** Accumulator A Saturation ‘Sticky’ Status bit(1)
1 = Accumulator A is saturated or has been saturated at some time
0 = Accumulator A is not saturated

bit 12 **SB:** Accumulator B Saturation ‘Sticky’ Status bit(1)
1 = Accumulator B is saturated or has been saturated at some time
0 = Accumulator B is not saturated

bit 11 **OAB:** OA || OB Combined Accumulator Overflow Status bit
1 = Accumulators A or B have overflowed
0 = Neither Accumulators A or B have overflowed

bit 10 **SAB:** SA || SB Combined Accumulator ‘Sticky’ Status bit
1 = Accumulators A or B are saturated or have been saturated at some time in the past
0 = Neither Accumulator A or B are saturated

Note: This bit may be read or cleared (not set). Clearing this bit will clear SA and SB.

bit 9 **DA:** DO Loop Active bit
1 = DO loop in progress
0 = DO loop not in progress

bit 8 **DC:** MCU ALU Half Carry/$\overline{\text{Borrow}}$ bit
1 = A carry-out from the 4th low-order bit (for byte-sized data) or 8th low-order bit (for word-sized data) of the result occurred
0 = No carry-out from the 4th low-order bit (for byte-sized data) or 8th low-order bit (for word-sized data) of the result occurred

Note 1: This bit can be read or cleared (not set).
2: The IPL<2:0> bits are concatenated with the IPL<3> bit (CORCON<3>) to form the CPU Interrupt Priority Level. The value in parentheses indicates the IPL if IPL<3> = 1. User interrupts are disabled when IPL<3> = 1.
3: The IPL<2:0> Status bits are read-only when NSTDIS = 1 (INTCON1<15>).

REGISTER 3-1: SR: CPU STATUS REGISTER (CONTINUED)

bit 7-5 **IPL<2:0>:** CPU Interrupt Priority Level Status bits(2)

111 = CPU Interrupt Priority Level is 7 (15), user interrupts disabled
110 = CPU Interrupt Priority Level is 6 (14)
101 = CPU Interrupt Priority Level is 5 (13)
100 = CPU Interrupt Priority Level is 4 (12)
011 = CPU Interrupt Priority Level is 3 (11)
010 = CPU Interrupt Priority Level is 2 (10)
001 = CPU Interrupt Priority Level is 1 (9)
000 = CPU Interrupt Priority Level is 0 (8)

bit 4 **RA:** REPEAT Loop Active bit

1 = REPEAT loop in progress
0 = REPEAT loop not in progress

bit 3 **N:** MCU ALU Negative bit

1 = Result was negative
0 = Result was non-negative (zero or positive)

bit 2 **OV:** MCU ALU Overflow bit

This bit is used for signed arithmetic (2's complement). It indicates an overflow of a magnitude that causes the sign bit to change state.
1 = Overflow occurred for signed arithmetic (in this arithmetic operation)
0 = No overflow occurred

bit 1 **Z:** MCU ALU Zero bit

1 = An operation that affects the Z bit has set it at some time in the past
0 = The most recent operation that affects the Z bit has cleared it (i.e., a non-zero result)

bit 0 **C:** MCU ALU Carry/$\overline{\text{Borrow}}$ bit

1 = A carry-out from the Most Significant bit of the result occurred
0 = No carry-out from the Most Significant bit of the result occurred

Note 1: This bit can be read or cleared (not set).

2: The IPL<2:0> bits are concatenated with the IPL<3> bit (CORCON<3>) to form the CPU Interrupt Priority Level. The value in parentheses indicates the IPL if IPL<3> = 1. User interrupts are disabled when IPL<3> = 1.

3: The IPL<2:0> Status bits are read-only when NSTDIS = 1 (INTCON1<15>).

© 2007-2012 Microchip Technology Inc.

REGISTER 3-2: CORCON: CORE CONTROL REGISTER

U-0	U-0	U-0	R/W-0	R/W-0	R-0	R-0	R-0
—	—	—	US	EDT(1)	DL<2:0>		
bit 15							bit 8

R/W-0	R/W-0	R/W-1	R/W-0	R/C-0	R/W-0	R/W-0	R/W-0
SATA	SATB	SATDW	ACCSAT	IPL3(2)	PSV	RND	IF
bit 7							bit 0

Legend:	C = Clear only bit		
R = Readable bit	W = Writable bit	-n = Value at POR	'1' = Bit is set
0' = Bit is cleared	'x = Bit is unknown	U = Unimplemented bit, read as '0'	

bit 15-13 **Unimplemented:** Read as '0'

bit 12 **US:** DSP Multiply Unsigned/Signed Control bit
1 = DSP engine multiplies are unsigned
0 = DSP engine multiplies are signed

bit 11 **EDT:** Early DO Loop Termination Control bit(1)
1 = Terminate executing DO loop at end of current loop iteration
0 = No effect

bit 10-8 **DL<2:0>:** DO Loop Nesting Level Status bits
111 = 7 DO loops active
•
•
•
001 = 1 DO loop active
000 = 0 DO loops active

bit 7 **SATA:** ACCA Saturation Enable bit
1 = Accumulator A saturation enabled
0 = Accumulator A saturation disabled

bit 6 **SATB:** ACCB Saturation Enable bit
1 = Accumulator B saturation enabled
0 = Accumulator B saturation disabled

bit 5 **SATDW:** Data Space Write from DSP Engine Saturation Enable bit
1 = Data space write saturation enabled
0 = Data space write saturation disabled

bit 4 **ACCSAT:** Accumulator Saturation Mode Select bit
1 = 9.31 saturation (super saturation)
0 = 1.31 saturation (normal saturation)

bit 3 **IPL3:** CPU Interrupt Priority Level Status bit 3(2)
1 = CPU interrupt priority level is greater than 7
0 = CPU interrupt priority level is 7 or less

bit 2 **PSV:** Program Space Visibility in Data Space Enable bit
1 = Program space visible in data space
0 = Program space not visible in data space

bit 1 **RND:** Rounding Mode Select bit
1 = Biased (conventional) rounding enabled
0 = Unbiased (convergent) rounding enabled

bit 0 **IF:** Integer or Fractional Multiplier Mode Select bit
1 = Integer mode enabled for DSP multiply ops
0 = Fractional mode enabled for DSP multiply ops

Note 1: This bit will always read as '0'.

2: The IPL3 bit is concatenated with the IPL<2:0> bits (SR<7:5>) to form the CPU interrupt priority level.

3.6 Arithmetic Logic Unit (ALU)

The dsPIC33FJ32MC202/204 and dsPIC33FJ16MC304 ALU is 16 bits wide and is capable of addition, subtraction, bit shifts and logic operations. Unless otherwise mentioned, arithmetic operations are 2's complement in nature. Depending on the operation, the ALU can affect the values of the Carry (C), Zero (Z), Negative (N), Overflow (OV) and Digit Carry (DC) Status bits in the SR register. The C and DC Status bits operate as Borrow and Digit Borrow bits, respectively, for subtraction operations.

The ALU can perform 8-bit or 16-bit operations, depending on the mode of the instruction that is used. Data for the ALU operation can come from the W register array or data memory, depending on the addressing mode of the instruction. Likewise, output data from the ALU can be written to the W register array or a data memory location.

Refer to the "*16-bit MCU and DSC Programmer's Reference Manual*" (DS70157) for information on the SR bits affected by each instruction.

The dsPIC33FJ32MC202/204 and dsPIC33FJ16MC304 CPU incorporates hardware support for both multiplication and division. This includes a dedicated hardware multiplier and support hardware for 16-bit-divisor division.

3.6.1 MULTIPLIER

Using the high-speed 17-bit x 17-bit multiplier of the DSP engine, the ALU supports unsigned, signed or mixed-sign operation in several MCU multiplication modes:

- 16-bit x 16-bit signed
- 16-bit x 16-bit unsigned
- 16-bit signed x 5-bit (literal) unsigned
- 16-bit unsigned x 16-bit unsigned
- 16-bit unsigned x 5-bit (literal) unsigned
- 16-bit unsigned x 16-bit signed
- 8-bit unsigned x 8-bit unsigned

3.6.2 DIVIDER

The divide block supports 32-bit/16-bit and 16-bit/16-bit signed and unsigned integer divide operations with the following data sizes:

1. 32-bit signed/16-bit signed divide
2. 32-bit unsigned/16-bit unsigned divide
3. 16-bit signed/16-bit signed divide
4. 16-bit unsigned/16-bit unsigned divide

The quotient for all divide instructions ends up in W0 and the remainder in W1. 16-bit signed and unsigned `DIV` instructions can specify any W register for both the 16-bit divisor (Wn) and any W register (aligned) pair (W(m + 1):Wm) for the 32-bit dividend. The divide algorithm takes one cycle per bit of divisor, so both 32-bit/16-bit and 16-bit/16-bit instructions take the same number of cycles to execute.

3.7 DSP Engine

The DSP engine consists of a high-speed 17-bit x 17-bit multiplier, a barrel shifter and a 40-bit adder/subtracter (with two target accumulators, round and saturation logic).

The dsPIC33FJ32MC202/204 and dsPIC33FJ16MC304 is a single-cycle instruction flow architecture; therefore, concurrent operation of the DSP engine with MCU instruction flow is not possible. However, some MCU ALU and DSP engine resources can be used concurrently by the same instruction (e.g., `ED`, `EDAC`).

The DSP engine can also perform inherent accumulator-to-accumulator operations that require no additional data. These instructions are `ADD`, `SUB` and `NEG`.

The DSP engine has options selected through bits in the CPU Core Control register (CORCON), as listed below:

- Fractional or integer DSP multiply (IF)
- Signed or unsigned DSP multiply (US)
- Conventional or convergent rounding (RND)
- Automatic saturation on/off for ACCA (SATA)
- Automatic saturation on/off for ACCB (SATB)
- Automatic saturation on/off for writes to data memory (SATDW)
- Accumulator Saturation mode selection (ACCSAT)

A block diagram of the DSP engine is shown in Figure 3-3.

TABLE 3-1: DSP INSTRUCTIONS SUMMARY

Instruction	Algebraic Operation	ACC Write Back
`CLR`	$A = 0$	Yes
`ED`	$A = (x - y)^2$	No
`EDAC`	$A = A + (x - y)^2$	No
`MAC`	$A = A + (x * y)$	Yes
`MAC`	$A = A + x^2$	No
`MOVSAC`	No change in A	Yes
`MPY`	$A = x \cdot y$	No
`MPY`	$A = x^2$	No
`MPY.N`	$A = -x \cdot y$	No
`MSC`	$A = A - x \cdot y$	Yes

© 2007-2012 Microchip Technology Inc.

FIGURE 3-3: DSP ENGINE BLOCK DIAGRAM

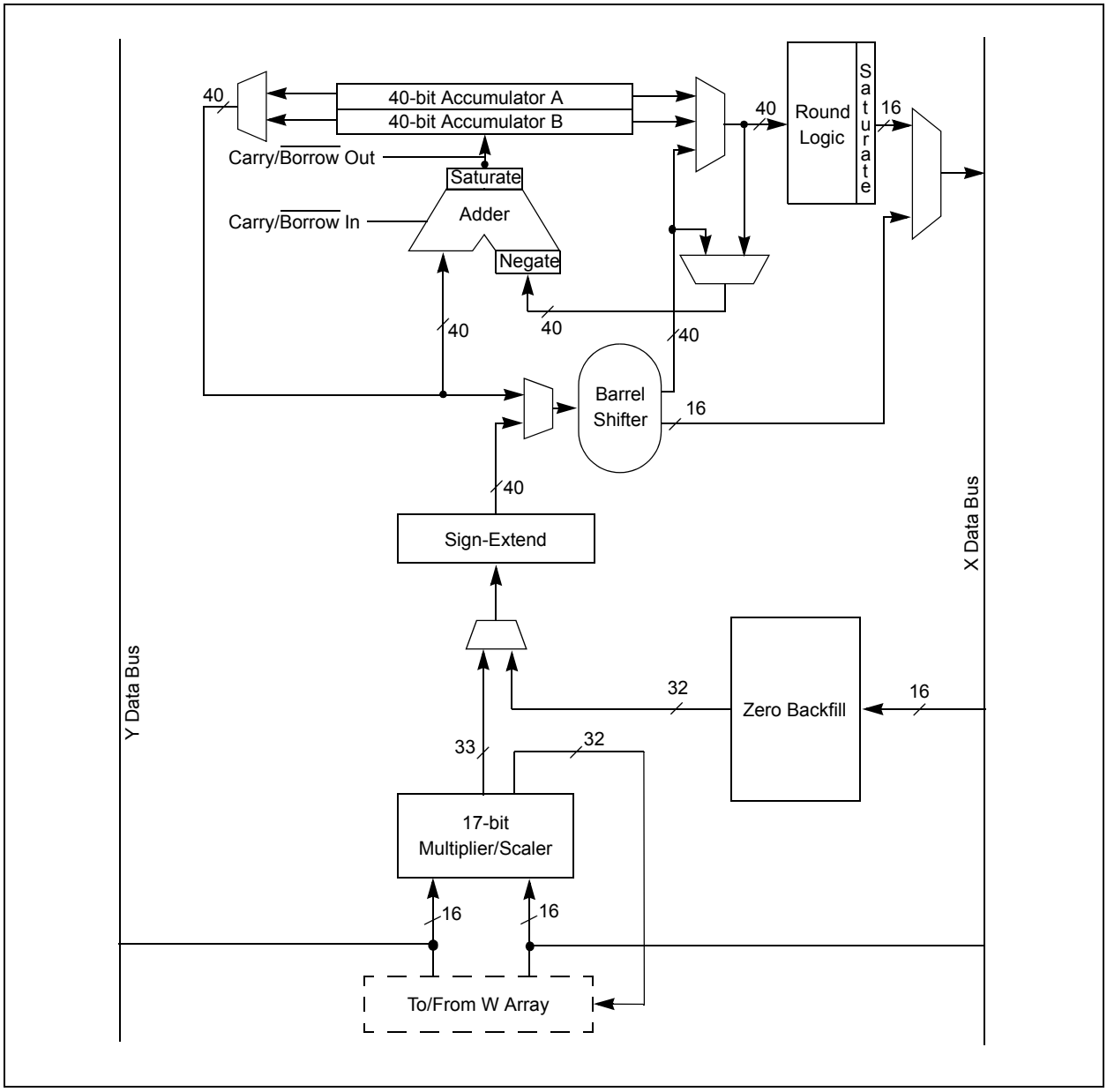

3.7.1 MULTIPLIER

The 17-bit x 17-bit multiplier is capable of signed or unsigned operation and can multiplex its output using a scaler to support either 1.31 fractional (Q31) or 32-bit integer results. Unsigned operands are zero-extended into the 17th bit of the multiplier input value. Signed operands are sign-extended into the 17th bit of the multiplier input value. The output of the 17-bit x 17-bit multiplier/scaler is a 33-bit value that is sign-extended to 40 bits. Integer data is inherently represented as a signed 2's complement value, where the Most Significant bit (MSb) is defined as a sign bit. The range of an N-bit 2's complement integer is -2^{N-1} to $2^{N-1} - 1$.

- For a 16-bit integer, the data range is -32768 (0x8000) to 32767 (0x7FFF) including 0.
- For a 32-bit integer, the data range is -2,147,483,648 (0x8000 0000) to 2,147,483,647 (0x7FFF FFFF).

When the multiplier is configured for fractional multiplication, the data is represented as a 2's complement fraction, where the MSb is defined as a sign bit and the radix point is implied to lie just after the sign bit (QX format). The range of an N-bit 2's complement fraction with this implied radix point is -1.0 to $(1 - 2^{1-N})$. For a 16-bit fraction, the Q15 data range is -1.0 (0x8000) to 0.999969482 (0x7FFF) including 0 and has a precision of 3.01518×10^{-5}. In Fractional mode, the 16 x 16 multiply operation generates a 1.31 product that has a precision of 4.65661×10^{-10}.

The same multiplier is used to support the MCU multiply instructions, which include integer 16-bit signed, unsigned and mixed sign multiply operations.

The `MUL` instruction can be directed to use byte or word-sized operands. Byte operands will direct a 16-bit result, and word operands will direct a 32-bit result to the specified register(s) in the W array.

3.7.2 DATA ACCUMULATORS AND ADDER/SUBTRACTER

The data accumulator consists of a 40-bit adder/subtracter with automatic sign extension logic. It can select one of two accumulators (A or B) as its pre-accumulation source and post-accumulation destination. For the `ADD` and `LAC` instructions, the data to be accumulated or loaded can be optionally scaled using the barrel shifter prior to accumulation.

3.7.2.1 Adder/Subtracter, Overflow and Saturation

The adder/subtracter is a 40-bit adder with an optional zero input into one side, and either true or complement data into the other input.

- In the case of addition, the Carry/$\overline{\text{Borrow}}$ input is active-high and the other input is true data (not complemented).
- In the case of subtraction, the Carry/$\overline{\text{Borrow}}$ input is active-low and the other input is complemented.

The adder/subtracter generates Overflow Status bits, SA/SB and OA/OB, which are latched and reflected in the STATUS register:

- Overflow from bit 39: this is a catastrophic overflow in which the sign of the accumulator is destroyed.
- Overflow into guard bits 32 through 39: this is a recoverable overflow. This bit is set whenever all the guard bits are not identical to each other.

The adder has an additional saturation block that controls accumulator data saturation, if selected. It uses the result of the adder, the Overflow Status bits described previously and the SAT<A:B> (CORCON<7:6>) and ACCSAT (CORCON<4>) mode control bits to determine when and to what value to saturate.

Six STATUS register bits support saturation and overflow:

- OA: ACCA overflowed into guard bits
- OB: ACCB overflowed into guard bits
- SA: ACCA saturated (bit 31 overflow and saturation)
  or
  ACCA overflowed into guard bits and saturated (bit 39 overflow and saturation)
- SB: ACCB saturated (bit 31 overflow and saturation)
  or
  ACCB overflowed into guard bits and saturated (bit 39 overflow and saturation)
- OAB: Logical OR of OA and OB
- SAB: Logical OR of SA and SB

The OA and OB bits are modified each time data passes through the adder/subtracter. When set, they indicate that the most recent operation has overflowed into the accumulator guard bits (bits 32 through 39). The OA and OB bits can also optionally generate an arithmetic warning trap when set and the corresponding Overflow Trap Flag Enable bits (OVATE, OVBTE) in the INTCON1 register are set (refer to **Section 7.0 "Interrupt Controller"**). This allows the user application to take immediate action, for example, to correct system gain.

© 2007-2012 Microchip Technology Inc.

The SA and SB bits are modified each time data passes through the adder/subtracter, but can only be cleared by the user application. When set, they indicate that the accumulator has overflowed its maximum range (bit 31 for 32-bit saturation or bit 39 for 40-bit saturation) and will be saturated (if saturation is enabled). When saturation is not enabled, SA and SB default to bit 39 overflow and thus indicate that a catastrophic overflow has occurred. If the COVTE bit in the INTCON1 register is set, SA and SB bits will generate an arithmetic warning trap when saturation is disabled.

The Overflow and Saturation Status bits can optionally be viewed in the STATUS Register (SR) as the logical OR of OA and OB (in bit OAB) and the logical OR of SA and SB (in bit SAB). Programmers can check one bit in the STATUS register to determine if either accumulator has overflowed, or one bit to determine if either accumulator has saturated. This is useful for complex number arithmetic, which typically uses both accumulators.

The device supports three Saturation and Overflow modes:

- Bit 39 Overflow and Saturation:
  When bit 39 overflow and saturation occurs, the saturation logic loads the maximally positive 9.31 (0x7FFFFFFFFF) or maximally negative 9.31 value (0x8000000000) into the target accumulator. The SA or SB bit is set and remains set until cleared by the user application. This condition is referred to as ‘super saturation’ and provides protection against erroneous data or unexpected algorithm problems (such as gain calculations).
- Bit 31 Overflow and Saturation:
  When bit 31 overflow and saturation occurs, the saturation logic then loads the maximally positive 1.31 value (0x007FFFFFFF) or maximally negative 1.31 value (0x0080000000) into the target accumulator. The SA or SB bit is set and remains set until cleared by the user application. When this Saturation mode is in effect, the guard bits are not used, so the OA, OB or OAB bits are never set.
- Bit 39 Catastrophic Overflow:
  The bit 39 Overflow Status bit from the adder is used to set the SA or SB bit, which remains set until cleared by the user application. No saturation operation is performed, and the accumulator is allowed to overflow, destroying its sign. If the COVTE bit in the INTCON1 register is set, a catastrophic overflow can initiate a trap exception.

3.7.3 ACCUMULATOR ‘WRITE BACK’

The MAC class of instructions (with the exception of MPY, MPY.N, ED and EDAC) can optionally write a rounded version of the high word (bits 31 through 16) of the accumulator that is not targeted by the instruction into data space memory. The write is performed across the X bus into combined X and Y address space. The following addressing modes are supported:

- W13, Register Direct:
  The rounded contents of the non-target accumulator are written into W13 as a 1.15 fraction.
- [W13] + = 2, Register Indirect with Post-Increment:
  The rounded contents of the non-target accumulator are written into the address pointed to by W13 as a 1.15 fraction. W13 is then incremented by 2 (for a word write).

3.7.3.1 Round Logic

The round logic is a combinational block that performs a conventional (biased) or convergent (unbiased) round function during an accumulator write (store). The Round mode is determined by the state of the RND bit in the CORCON register. It generates a 16-bit, 1.15 data value that is passed to the data space write saturation logic. If rounding is not indicated by the instruction, a truncated 1.15 data value is stored and the least significant word (lsw) is simply discarded.

Conventional rounding zero-extends bit 15 of the accumulator and adds it to the ACCxH word (bits 16 through 31 of the accumulator).

- If the ACCxL word (bits 0 through 15 of the accumulator) is between 0x8000 and 0xFFFF (0x8000 included), ACCxH is incremented.
- If ACCxL is between 0x0000 and 0x7FFF, ACCxH is left unchanged.

A consequence of this algorithm is that over a succession of random rounding operations, the value tends to be biased slightly positive.

Convergent (or unbiased) rounding operates in the same manner as conventional rounding, except when ACCxL equals 0x8000. In this case, the Least Significant bit (bit 16 of the accumulator) of ACCxH is examined:

- If it is ‘1’, ACCxH is incremented.
- If it is ‘0’, ACCxH is not modified.

Assuming that bit 16 is effectively random in nature, this scheme removes any rounding bias that may accumulate.

The SAC and SAC.R instructions store either a truncated (SAC), or rounded (SAC.R) version of the contents of the target accumulator to data memory via the X bus, subject to data saturation (see **Section 3.7.3.2 “Data Space Write Saturation”**). For the MAC class of instructions, the accumulator write-back operation functions in the same manner, addressing combined MCU (X and Y) data space though the X bus. For this class of instructions, the data is always subject to rounding.

3.7.3.2 Data Space Write Saturation

In addition to adder/subtracter saturation, writes to data space can also be saturated, but without affecting the contents of the source accumulator. The data space write saturation logic block accepts a 16-bit, 1.15 fractional value from the round logic block as its input, together with overflow status from the original source (accumulator) and the 16-bit round adder. These inputs are combined and used to select the appropriate 1.15 fractional value as output to write to data space memory.

If the SATDW bit in the CORCON register is set, data (after rounding or truncation) is tested for overflow and adjusted accordingly:

- For input data greater than 0x007FFF, data written to memory is forced to the maximum positive 1.15 value, 0x7FFF.
- For input data less than 0xFF8000, data written to memory is forced to the maximum negative 1.15 value, 0x8000.

The Most Significant bit of the source (bit 39) is used to determine the sign of the operand being tested.

If the SATDW bit in the CORCON register is not set, the input data is always passed through unmodified under all conditions.

3.7.4 BARREL SHIFTER

The barrel shifter can perform up to 16-bit arithmetic or logic right shifts, or up to 16-bit left shifts in a single cycle. The source can be either of the two DSP accumulators or the X bus (to support multi-bit shifts of register or memory data).

The shifter requires a signed binary value to determine both the magnitude (number of bits) and direction of the shift operation. A positive value shifts the operand right. A negative value shifts the operand left. A value of '0' does not modify the operand.

The barrel shifter is 40 bits wide, thereby obtaining a 40-bit result for DSP shift operations and a 16-bit result for MCU shift operations. Data from the X bus is presented to the barrel shifter between bit positions 16 and 31 for right shifts, and between bit positions 0 and 16 for left shifts.

© 2007-2012 Microchip Technology Inc.

4.0 MEMORY ORGANIZATION

Note: This data sheet summarizes the features of the dsPIC33FJ32MC202/204 and dsPIC33FJ16MC304 family of devices. It is not intended to be a comprehensive reference source. To complement the information in this data sheet, refer to **Section 4. "Program Memory"** (DS70202) of the *"dsPIC33F/PIC24H Family Reference Manual"*, which is available from the Microchip web site (www.microchip.com).

The dsPIC33FJ32MC202/204 and dsPIC33FJ16MC304 architecture features separate program and data memory spaces and buses. This architecture also allows the direct access of program memory from the data space during code execution.

4.1 Program Address Space

The program address memory space of the dsPIC33FJ32MC202/204 and dsPIC33FJ16MC304 devices is 4M instructions. The space is addressable by a 24-bit value derived either from the 23-bit Program Counter (PC) during program execution, or from table operation or data space remapping as described in **Section 4.8 "Interfacing Program and Data Memory Spaces"**.

User application access to the program memory space is restricted to the lower half of the address range (0x000000 to 0x7FFFFF). The exception is the use of TBLRD/TBLWT operations, which use TBLPAG<7> to permit access to the Configuration bits and Device ID sections of the configuration memory space.

The memory maps for the dsPIC33FJ32MC202/204 and dsPIC33FJ16MC304 devices are shown in Figure 4-1.

FIGURE 4-1: PROGRAM MEMORY MAPS FOR dsPIC33FJ32MC202/204 and dsPIC33FJ16MC304 DEVICES

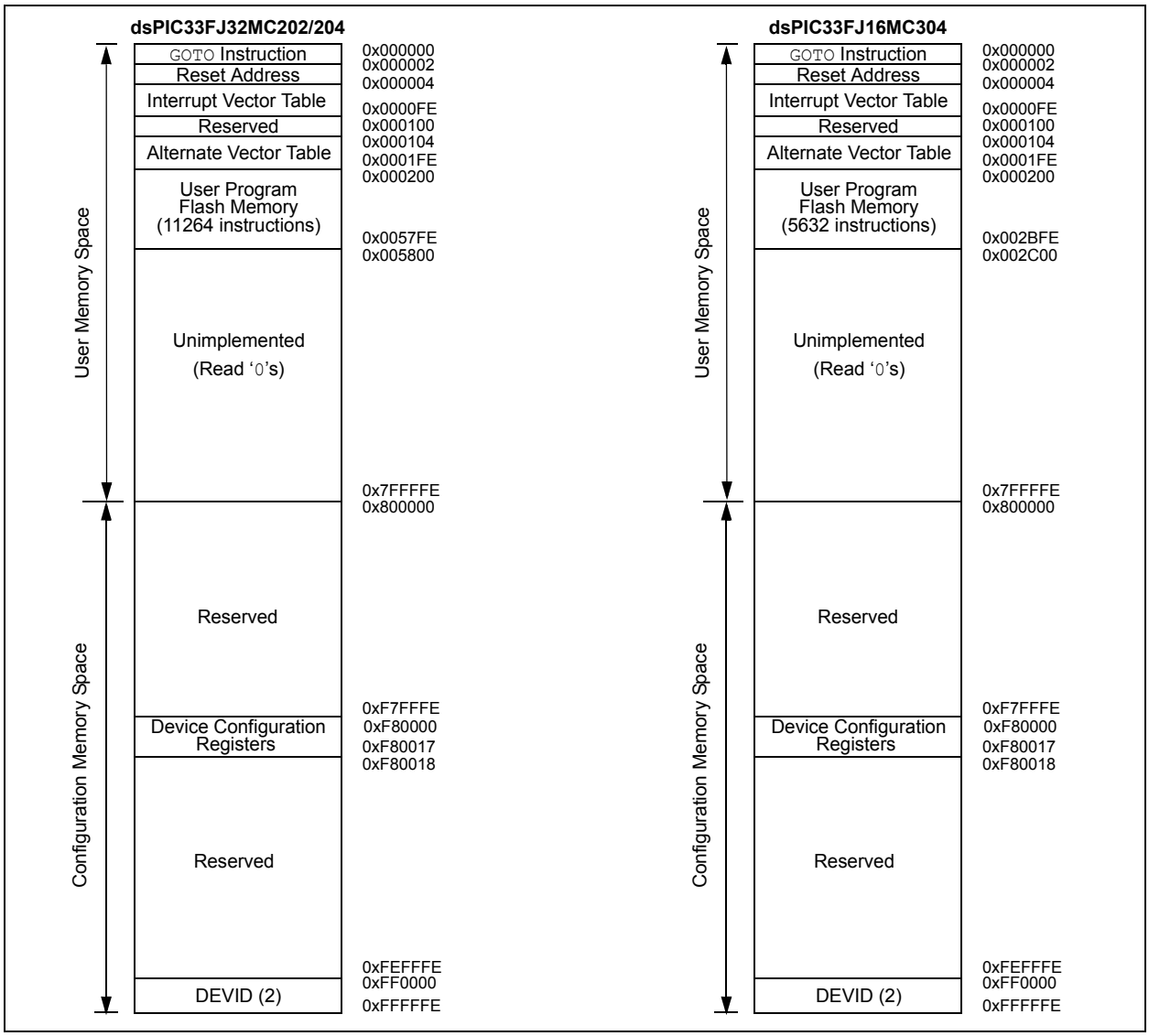

4.1.1 PROGRAM MEMORY ORGANIZATION

The program memory space is organized in word-addressable blocks. Although it is treated as 24 bits wide, it is more appropriate to think of each address of the program memory as a lower and upper word, with the upper byte of the upper word being unimplemented. The lower word always has an even address, while the upper word has an odd address (Figure 4-2).

Program memory addresses are always word-aligned on the lower word, and addresses are incremented or decremented by two during code execution. This arrangement provides compatibility with data memory space addressing and makes data in the program memory space accessible.

4.1.2 INTERRUPT AND TRAP VECTORS

All dsPIC33FJ32MC202/204 and dsPIC33FJ16MC304 devices reserve the addresses between 0x00000 and 0x000200 for hard-coded program execution vectors. A hardware Reset vector is provided to redirect code execution from the default value of the PC on device Reset to the actual start of code. A GOTO instruction is programmed by the user application at 0x000000, with the actual address for the start of code at 0x000002.

dsPIC33FJ32MC202/204 and dsPIC33FJ16MC304 devices also have two interrupt vector tables, located from 0x000004 to 0x0000FF and 0x000100 to 0x0001FF. These vector tables allow each of the device interrupt sources to be handled by separate Interrupt Service Routines (ISRs). A more detailed discussion of the interrupt vector tables is provided in **Section 7.1 "Interrupt Vector Table"**.

FIGURE 4-2: PROGRAM MEMORY ORGANIZATION

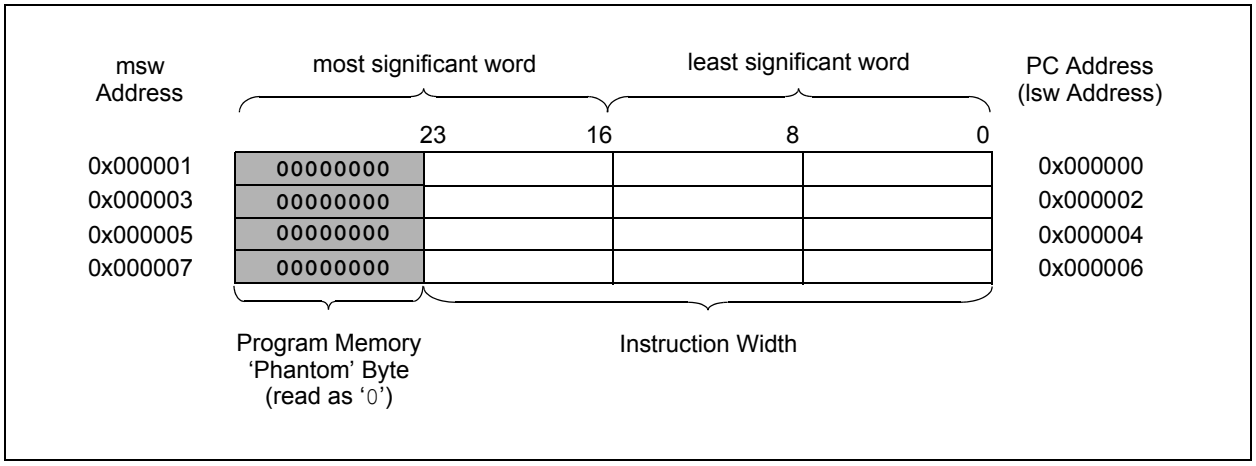

© 2007-2012 Microchip Technology Inc.

4.2 Data Address Space

The dsPIC33FJ32MC202/204 and dsPIC33FJ16MC304 CPU has a separate 16-bit-wide data memory space. The data space is accessed using separate Address Generation Units (AGUs) for read and write operations. The data memory maps is shown in Figure 4-3.

All Effective Addresses (EAs) in the data memory space are 16 bits wide and point to bytes within the data space. This arrangement gives a data space address range of 64 Kbytes or 32K words. The lower half of the data memory space (that is, when EA<15> = 0) is used for implemented memory addresses, while the upper half (EA<15> = 1) is reserved for the Program Space Visibility area (see **Section 4.8.3 "Reading Data from Program Memory Using Program Space Visibility"**).

dsPIC33FJ32MC202/204 and dsPIC33FJ16MC304 devices implement up to 2 Kbytes of data memory. Should an EA point to a location outside of this area, an all-zero word or byte will be returned.

4.2.1 DATA SPACE WIDTH

The data memory space is organized in byte addressable, 16-bit wide blocks. Data is aligned in data memory and registers as 16-bit words, but all data space EAs resolve to bytes. The Least Significant Bytes (LSBs) of each word have even addresses, while the Most Significant Bytes (MSBs) have odd addresses.

4.2.2 DATA MEMORY ORGANIZATION AND ALIGNMENT

To maintain backward compatibility with PIC® MCU devices and improve data space memory usage efficiency, the dsPIC33FJ32MC202/204 and dsPIC33FJ16MC304 instruction set supports both word and byte operations. As a consequence of byte accessibility, all effective address calculations are internally scaled to step through word-aligned memory. For example, the core recognizes that Post-Modified Register Indirect Addressing mode [Ws++] will result in a value of Ws + 1 for byte operations and Ws + 2 for word operations.

Data byte reads will read the complete word that contains the byte, using the LSB of any EA to determine which byte to select. The selected byte is placed onto the LSB of the data path. That is, data memory and registers are organized as two parallel byte-wide entities with shared (word) address decode but separate write lines. Data byte writes only write to the corresponding side of the array or register that matches the byte address.

All word accesses must be aligned to an even address. Misaligned word data fetches are not supported, so care must be taken when mixing byte and word operations, or translating from 8-bit MCU code. If a misaligned read or write is attempted, an address error trap is generated. If the error occurred on a read, the instruction underway is completed. If the error occurred on a write, the instruction is executed but the write does not occur. In either case, a trap is then executed, allowing the system and/or user application to examine the machine state prior to execution of the address Fault.

All byte loads into any W register are loaded into the Least Significant Byte. The Most Significant Byte is not modified.

A sign-extend instruction (SE) is provided to allow user applications to translate 8-bit signed data to 16-bit signed values. Alternatively, for 16-bit unsigned data, user applications can clear the MSB of any W register by executing a zero-extend (ZE) instruction on the appropriate address.

4.2.3 SFR SPACE

The first 2 Kbytes of the Near Data Space, from 0x0000 to 0x07FF, is primarily occupied by Special Function Registers (SFRs). These are used by the dsPIC33FJ32MC202/204 and dsPIC33FJ16MC304 core and peripheral modules for controlling the operation of the device.

SFRs are distributed among the modules that they control, and are generally grouped together by module. Much of the SFR space contains unused addresses; these are read as '0'.

Note:	The actual set of peripheral features and interrupts varies by the device. Refer to the corresponding device tables and pinout diagrams for device-specific information.

4.2.4 NEAR DATA SPACE

The 8 Kbyte area between 0x0000 and 0x1FFF is referred to as the near data space. Locations in this space are directly addressable via a 13-bit absolute address field within all memory direct instructions. Additionally, the whole data space is addressable using MOV instructions, which support Memory Direct Addressing mode with a 16-bit address field, or by using Indirect Addressing mode using a working register as an address pointer.

FIGURE 4-3: DATA MEMORY MAP FOR dsPIC33FJ32MC202/204 and dsPIC33FJ16MC304 DEVICES WITH 2 KB RAM

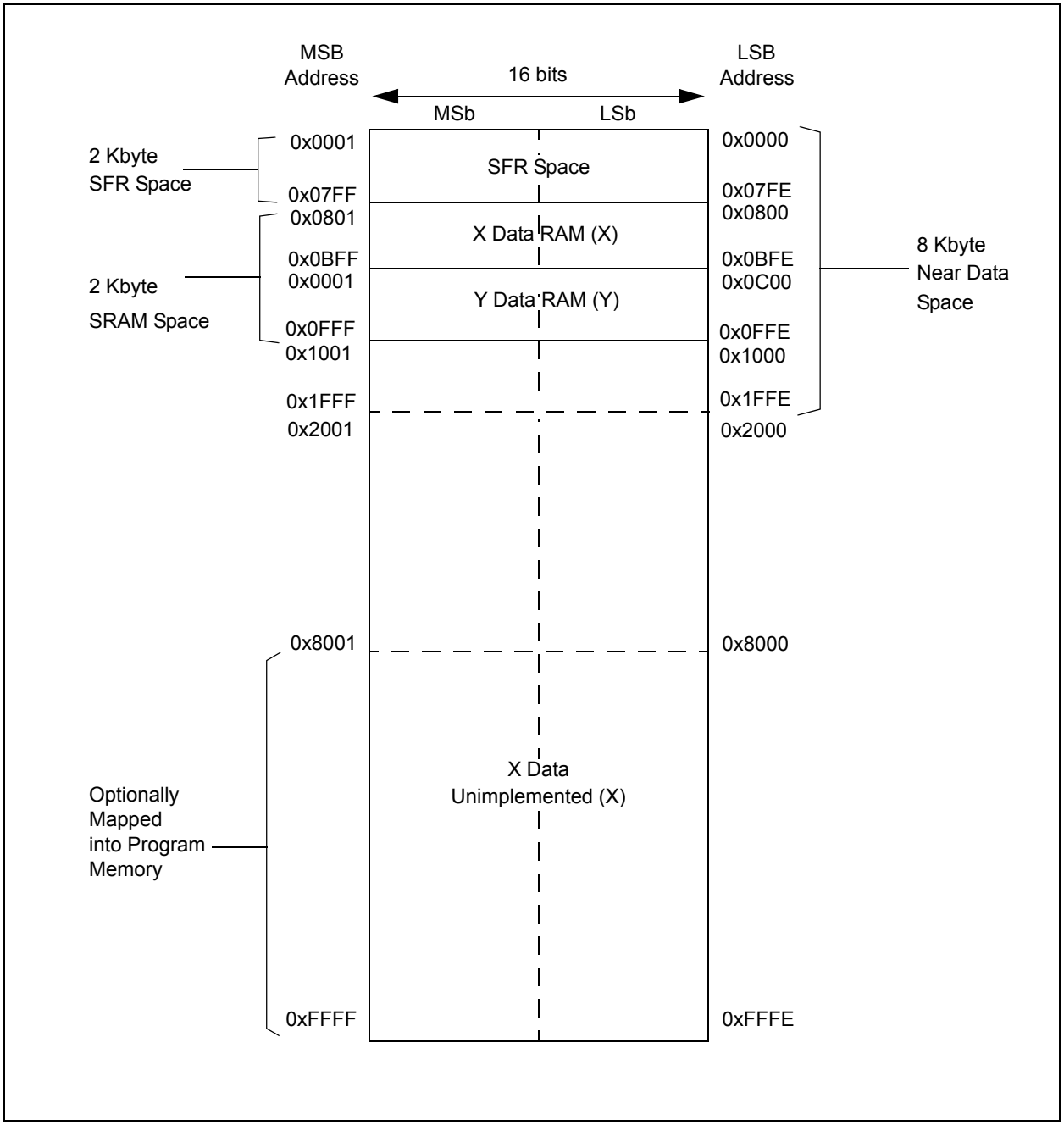

© 2007-2012 Microchip Technology Inc.

4.2.5 X AND Y DATA SPACES

The core has two data spaces, X and Y. These data spaces can be considered either separate (for some DSP instructions), or as one unified linear address range (for MCU instructions). The data spaces are accessed using two Address Generation Units (AGUs) and separate data paths. This feature allows certain instructions to concurrently fetch two words from RAM, thereby enabling efficient execution of DSP algorithms such as Finite Impulse Response (FIR) filtering and Fast Fourier Transform (FFT).

The X data space is used by all instructions and supports all addressing modes. X data space has separate read and write data buses. The X read data bus is the read data path for all instructions that view data space as combined X and Y address space. It is also the X data prefetch path for the dual operand DSP instructions (`MAC` class).

The Y data space is used in concert with the X data space by the `MAC` class of instructions (`CLR`, `ED`, `EDAC`, `MAC`, `MOVSAC`, `MPY`, `MPY.N` and `MSC`) to provide two concurrent data read paths.

Both the X and Y data spaces support Modulo Addressing mode for all instructions, subject to addressing mode restrictions. Bit-Reversed Addressing mode is only supported for writes to X data space.

All data memory writes, including in DSP instructions, view data space as combined X and Y address space. The boundary between the X and Y data spaces is device-dependent and is not user-programmable.

All effective addresses are 16 bits wide and point to bytes within the data space. Therefore, the data space address range is 64 Kbytes, or 32K words, though the implemented memory locations vary by device.

4.3 Program Memory Resources

Many useful resources are provided on the main product page of the Microchip web site for the devices listed in this data sheet. This product page, which can be accessed using this link, contains the latest updates and additional information.

Note:	In the event you are not able to access the product page using the link above, enter this URL in your browser: http://www.microchip.com/wwwproducts/Devices.aspx?dDocName=en530334

4.3.1 KEY RESOURCES

- **Section 4. “Program Memory”** (DS70202)
- Code Samples
- Application Notes
- Software Libraries
- Webinars
- All related dsPIC33F/PIC24H Family Reference Manuals Sections
- Development Tools

4.4 Special Function Register Maps

TABLE 4-1: CPU CORE REGISTERS MAP

SFR Name	SFR Addr	Bit 15	Bit 14	Bit 13	Bit 12	Bit 11	Bit 10	Bit 9	Bit 8	Bit 7	Bit 6	Bit 5	Bit 4	Bit 3	Bit 2	Bit 1	Bit 0	All Resets
WREG0	0000	Working Register 0																0000
WREG1	0002	Working Register 1																0000
WREG2	0004	Working Register 2																0000
WREG3	0006	Working Register 3																0000
WREG4	0008	Working Register 4																0000
WREG5	000A	Working Register 5																0000
WREG6	000C	Working Register 6																0000
WREG7	000E	Working Register 7																0000
WREG8	0010	Working Register 8																0000
WREG9	0012	Working Register 9																0000
WREG10	0014	Working Register 10																0000
WREG11	0016	Working Register 11																0000
WREG12	0018	Working Register 12																0000
WREG13	001A	Working Register 13																0000
WREG14	001C	Working Register 14																0000
WREG15	001E	Working Register 15																0800
SPLIM	0020	Stack Pointer Limit Register																xxxx
ACCAL	0022	Accumulator A Low Word Register																0000
ACCAH	0024	Accumulator A High Word Register																0000
ACCAU	0026	Accumulator A Upper Word Register																0000
ACCBL	0028	Accumulator B Low Word Register																0000
ACCBH	002A	Accumulator B High Word Register																0000
ACCBU	002C	Accumulator B Upper Word Register																0000
PCL	002E	Program Counter Low Word Register																0000
PCH	0030	—	—	—	—	—	—	—	—	Program Counter High Byte Register								0000
TBLPAG	0032	—	—	—	—	—	—	—	—	Table Page Address Pointer Register								0000
PSVPAG	0034	—	—	—	—	—	—	—	—	Program Memory Visibility Page Address Pointer Register								0000
RCOUNT	0036	Repeat Loop Counter Register																xxxx
DCOUNT	0038	DCOUNT<15:0>																xxxx
DOSTARTL	003A	DOSTARTL<15:1>															0	xxxx
DOSTARTH	003C	—	—	—	—	—	—	—	—	—	—	DOSTARTH<5:0>						00xx
DOENDL	003E	DOENDL<15:1>															0	xxxx
DOENDH	0040	—	—	—	—	—	—	—	—	—	—	DOENDH						00xx
SR	0042	OA	OB	SA	SB	OAB	SAB	DA	DC	IPL2	IPL1	IPL0	RA	N	OV	Z	C	0000
CORCON	0044	—	—	—	US	EDT	DL<2:0>			SATA	SATB	SATDW	ACCSAT	IPL3	PSV	RND	IF	0020

Legend: x = unknown value on Reset, — = unimplemented, read as '0'. Reset values are shown in hexadecimal.

© 2007-2012 Microchip Technology Inc.

TABLE 4-1: CPU CORE REGISTERS MAP (CONTINUED)

SFR Name	SFR Addr	Bit 15	Bit 14	Bit 13	Bit 12	Bit 11	Bit 10	Bit 9	Bit 8	Bit 7	Bit 6	Bit 5	Bit 4	Bit 3	Bit 2	Bit 1	Bit 0	All Resets
MODCON	0046	XMODEN	YMODEN	—	—	BWM<3:0>				YWM<3:0>				XWM<3:0>				0000
XMODSRT	0048	XS<15:1>															0	xxxx
XMODEND	004A	XE<15:1>															1	xxxx
YMODSRT	004C	YS<15:1>															0	xxxx
YMODEND	004E	YE<15:1>															1	xxxx
XBREV	0050	BREN	XB<14:0>															xxxx
DISICNT	0052	—	—	Disable Interrupts Counter Register														xxxx

Legend: x = unknown value on Reset, — = unimplemented, read as '0'. Reset values are shown in hexadecimal.

TABLE 4-2: CHANGE NOTIFICATION REGISTER MAP FOR dsPIC33FJ32MC202

SFR Name	SFR Addr	Bit 15	Bit 14	Bit 13	Bit 12	Bit 11	Bit 10	Bit 9	Bit 8	Bit 7	Bit 6	Bit 5	Bit 4	Bit 3	Bit 2	Bit 1	Bit 0	All Resets
CNEN1	0060	CN15IE	CN14IE	CN13IE	CN12IE	CN11IE	—	—	—	CN7IE	CN6IE	CN5IE	CN4IE	CN3IE	CN2IE	CN1IE	CN0IE	0000
CNEN2	0062	—	CN30IE	CN29IE	—	CN27IE	—	—	CN24IE	CN23IE	CN22IE	CN21IE	—	—	—	—	CN16IE	0000
CNPU1	0068	CN15PUE	CN14PUE	CN13PUE	CN12PUE	CN11PUE	—	—	—	CN7PUE	CN6PUE	CN5PUE	CN4PUE	CN3PUE	CN2PUE	CN1PUE	CN0PUE	0000
CNPU2	006A	—	CN30PUE	CN29PUE	—	CN27PUE	—	—	CN24PUE	CN23PUE	CN22PUE	CN21PUE	—	—	—	—	CN16PUE	0000

Legend: x = unknown value on Reset, — = unimplemented, read as '0'. Reset values are shown in hexadecimal.

TABLE 4-3: CHANGE NOTIFICATION REGISTER MAP FOR dsPIC33FJ32MC204 and dsPIC33FJ16MC304

SFR Name	SFR Addr	Bit 15	Bit 14	Bit 13	Bit 12	Bit 11	Bit 10	Bit 9	Bit 8	Bit 7	Bit 6	Bit 5	Bit 4	Bit 3	Bit 2	Bit 1	Bit 0	All Resets
CNEN1	0060	CN15IE	CN14IE	CN13IE	CN12IE	CN11IE	CN10IE	CN9IE	CN8IE	CN7IE	CN6IE	CN5IE	CN4IE	CN3IE	CN2IE	CN1IE	CN0IE	0000
CNEN2	0062	—	CN30IE	CN29IE	CN28IE	CN27IE	CN26IE	CN25IE	CN24IE	CN23IE	CN22IE	CN21IE	CN20IE	CN19IE	CN18IE	CN17IE	CN16IE	0000
CNPU1	0068	CN15PUE	CN14PUE	CN13PUE	CN12PUE	CN11PUE	CN10PUE	CN9PUE	CN8PUE	CN7PUE	CN6PUE	CN5PUE	CN4PUE	CN3PUE	CN2PUE	CN1PUE	CN0PUE	0000
CNPU2	006A	—	CN30PUE	CN29PUE	CN28PUE	CN27PUE	CN26PUE	CN25PUE	CN24PUE	CN23PUE	CN22PUE	CN21PUE	CN20PUE	CN19PUE	CN18PUE	CN17PUE	CN16PUE	0000

Legend: x = unknown value on Reset, — = unimplemented, read as '0'. Reset values are shown in hexadecimal.

© 2007-2012 Microchip Technology Inc.

TABLE 4-4: INTERRUPT CONTROLLER REGISTER MAP

SFR Name	SFR Addr	Bit 15	Bit 14	Bit 13	Bit 12	Bit 11	Bit 10	Bit 9	Bit 8	Bit 7	Bit 6	Bit 5	Bit 4	Bit 3	Bit 2	Bit 1	Bit 0	All Resets
INTCON1	0080	NSTDIS	OVAERR	OVBERR	COVAERR	COVBERR	OVATE	OVBTE	COVTE	SFTACERR	DIV0ERR	—	MATHERR	ADDRERR	STKERR	OSCFAIL	—	0000
INTCON2	0082	ALTIVT	DISI	—	—	—	—	—	—	—	—	—	—	—	INT2EP	INT1EP	INT0EP	0000
IFS0	0084	—	—	AD1IF	U1TXIF	U1RXIF	SPI1IF	SPI1EIF	T3IF	T2IF	OC2IF	IC2IF	—	T1IF	OC1IF	IC1IF	INT0IF	0000
IFS1	0086	—	—	INT2IF	—	—	—	—	—	IC8IF	IC7IF	—	INT1IF	CNIF	—	MI2C1IF	SI2C1IF	0000
IFS3	008A	FLTA1IF	—	—	—	—	QEIIF	PWM1IF	—	—	—	—	—	—	—	—	—	0000
IFS4	008C	—	—	—	—	—	FLTA2IF	PWM2IF	—	—	—	—	—	—	—	U1EIF	—	0000
IEC0	0094	—	—	AD1IE	U1TXIE	U1RXIE	SPI1IE	SPI1EIE	T3IE	T2IE	OC2IE	IC2IE	—	T1IE	OC1IE	IC1IE	INT0IE	0000
IEC1	0096	—	—	INT2IE	—	—	—	—	—	IC8IE	IC7IE	—	INT1IE	CNIE	—	MI2C1IE	SI2C1IE	0000
IEC3	009A	FLTA1IE	—	—	—	—	QEIIE	PWM1IE	—	—	—	—	—	—	—	—	—	0000
IEC4	009C	—	—	—	—	—	FLTA2IE	PWM2IE	—	—	—	—	—	—	—	U1EIE	—	0000
IPC0	00A4	—	T1IP<2:0>			—	OC1IP<2:0>			—	IC1IP<2:0>			—	INT0IP<2:0>			4444
IPC1	00A6	—	T2IP<2:0>			—	OC2IP<2:0>			—	IC2IP<2:0>			—	—	—	—	4440
IPC2	00A8	—	U1RXIP<2:0>			—	SPI1IP<2:0>			—	SPI1EIP<2:0>			—	T3IP<2:0>			4444
IPC3	00AA	—	—	—	—	—	—	—	—	—	AD1IP<2:0>			—	U1TXIP<2:0>			0044
IPC4	00AC	—	CNIP<2:0>			—	—	—	—	—	MI2C1IP<2:0>			—	SI2C1IP<2:0>			4044
IPC5	00AE	—	IC8IP<2:0>			—	IC7IP<2:0>			—	—	—	—	—	INT1IP<2:0>			4404
IPC7	00B2	—	—	—	—	—	—	—	—	—	INT2IP<2:0>			—	—	—	—	0040
IPC14	00C0	—	—	—	—	—	QEIIP<2:0>			—	PWM1IP<2:0>			—	—	—	—	0440
IPC15	00C2	—	FLTA1IP<2:0>			—	—	—	—	—	—	—	—	—	—	—	—	4000
IPC16	00C4	—	—	—	—	—	—	—	—	—	U1EIP<2:0>			—	—	—	—	0040
IPC18	00C8	—	—	—	—	—	FLTA2IP<2:0>			—	PWM2IP<2:0>			—	—	—	—	0440
INTTREG	00E0	—	—	—	—	ILR<3:0>				—	VECNUM<6:0>							0000

Legend: x = unknown value on Reset, — = unimplemented, read as '0'. Reset values are shown in hexadecimal.

© 2007-2012 Microchip Technology Inc.

TABLE 4-5: TIMER REGISTER MAP

SFR Name	SFR Addr	Bit 15	Bit 14	Bit 13	Bit 12	Bit 11	Bit 10	Bit 9	Bit 8	Bit 7	Bit 6	Bit 5	Bit 4	Bit 3	Bit 2	Bit 1	Bit 0	All Resets
TMR1	0100	Timer1 Register																0000
PR1	0102	Period Register 1																FFFF
T1CON	0104	TON	—	TSIDL	—	—	—	—	—	—	TGATE	TCKPS<1:0>		—	TSYNC	TCS	—	0000
TMR2	0106	Timer2 Register																0000
TMR3HLD	0108	Timer3 Holding Register (for 32-bit timer operations only)																xxxx
TMR3	010A	Timer3 Register																0000
PR2	010C	Period Register 2																FFFF
PR3	010E	Period Register 3																FFFF
T2CON	0110	TON	—	TSIDL	—	—	—	—	—	—	TGATE	TCKPS<1:0>		T32	—	TCS	—	0000
T3CON	0112	TON	—	TSIDL	—	—	—	—	—	—	TGATE	TCKPS<1:0>		—	—	TCS	—	0000

Legend: x = unknown value on Reset, — = unimplemented, read as '0'. Reset values are shown in hexadecimal.

TABLE 4-6: INPUT CAPTURE REGISTER MAP

SFR Name	SFR Addr	Bit 15	Bit 14	Bit 13	Bit 12	Bit 11	Bit 10	Bit 9	Bit 8	Bit 7	Bit 6	Bit 5	Bit 4	Bit 3	Bit 2	Bit 1	Bit 0	All Resets
IC1BUF	0140	Input 1 Capture Register																xxxx
IC1CON	0142	—	—	ICSIDL	—	—	—	—	—	ICTMR	ICI<1:0>		ICOV	ICBNE	ICM<2:0>			0000
IC2BUF	0144	Input 2 Capture Register																xxxx
IC2CON	0146	—	—	ICSIDL	—	—	—	—	—	ICTMR	ICI<1:0>		ICOV	ICBNE	ICM<2:0>			0000
IC7BUF	0158	Input 7 Capture Register																xxxx
IC7CON	015A	—	—	ICSIDL	—	—	—	—	—	ICTMR	ICI<1:0>		ICOV	ICBNE	ICM<2:0>			0000
IC8BUF	015C	Input 8 Capture Register																xxxx
IC8CON	015E	—	—	ICSIDL	—	—	—	—	—	ICTMR	ICI<1:0>		ICOV	ICBNE	ICM<2:0>			0000

Legend: x = unknown value on Reset, — = unimplemented, read as '0'. Reset values are shown in hexadecimal.

TABLE 4-7: OUTPUT COMPARE REGISTER MAP

SFR Name	SFR Addr	Bit 15	Bit 14	Bit 13	Bit 12	Bit 11	Bit 10	Bit 9	Bit 8	Bit 7	Bit 6	Bit 5	Bit 4	Bit 3	Bit 2	Bit 1	Bit 0	All Resets
OC1RS	0180	Output Compare 1 Secondary Register																xxxx
OC1R	0182	Output Compare 1 Register																xxxx
OC1CON	0184	—	—	OCSIDL	—	—	—	—	—	—	—	—	OCFLT	OCTSEL	OCM<2:0>			0000
OC2RS	0186	Output Compare 2 Secondary Register																xxxx
OC2R	0188	Output Compare 2 Register																xxxx
OC2CON	018A	—	—	OCSIDL	—	—	—	—	—	—	—	—	OCFLT	OCTSEL	OCM<2:0>			0000

Legend: x = unknown value on Reset, — = unimplemented, read as '0'. Reset values are shown in hexadecimal.

© 2007-2012 Microchip Technology Inc.

TABLE 4-8: 6-OUTPUT PWM1 REGISTER MAP

SFR Name	Addr.	Bit 15	Bit 14	Bit 13	Bit 12	Bit 11	Bit 10	Bit 9	Bit 8	Bit 7	Bit 6	Bit 5	Bit 4	Bit 3	Bit 2	Bit 1	Bit 0	Reset State
P1TCON	01C0	PTEN	—	PTSIDL	—	—	—	—	—	PTOPS<3:0>				PTCKPS<1:0>		PTMOD<1:0>		0000 0000 0000 0000
P1TMR	01C2	PTDIR	PWM Timer Count Value Register															0000 0000 0000 0000
P1TPER	01C4	—	PWM Time Base Period Register															0000 0000 0000 0000
P1SECMP	01C6	SEVTDIR	PWM Special Event Compare Register															0000 0000 0000 0000
PWM1CON1	01C8	—	—	—	—	—	PMOD3	PMOD2	PMOD1	—	PEN3H	PEN2H	PEN1H	—	PEN3L	PEN2L	PEN1L	0000 0000 1111 1111
PWM1CON2	01CA	—	—	—	—	SEVOPS<3:0>				—	—	—	—	—	IUE	OSYNC	UDIS	0000 0000 0000 0000
P1DTCON1	01CC	DTBPS<1:0>		DTB<5:0>						DTAPS<1:0>		DTA<5:0>						0000 0000 0000 0000
P1DTCON2	01CE	—	—	—	—	—	—	—	—	—	—	DTS3A	DTS3I	DTS2A	DTS2I	DTS1A	DTS1I	0000 0000 0000 0000
P1FLTACON	01D0	—	—	FAOV3H	FAOV3L	FAOV2H	FAOV2L	FAOV1H	FAOV1L	FLTAM	—	—	—	—	FAEN3	FAEN2	FAEN1	0000 0000 0000 0000
P1OVDCON	01D4	—	—	POVD3H	POVD3L	POVD2H	POVD2L	POVD1H	POVD1L	—	—	POUT3H	POUT3L	POUT2H	POUT2L	POUT1H	POUT1L	1111 1111 0000 0000
P1DC1	01D6	PWM Duty Cycle #1 Register																0000 0000 0000 0000
P1DC2	01D8	PWM Duty Cycle #2 Register																0000 0000 0000 0000
P1DC3	01DA	PWM Duty Cycle #3 Register																0000 0000 0000 0000

Legend: u = uninitialized bit, — = unimplemented, read as '0'

TABLE 4-9: 2-OUTPUT PWM2 REGISTER MAP

SFR Name	Addr.	Bit 15	Bit 14	Bit 13	Bit 12	Bit 11	Bit 10	Bit 9	Bit 8	Bit 7	Bit 6	Bit 5	Bit 4	Bit 3	Bit 2	Bit 1	Bit 0	Reset State
P2TCON	05C0	PTEN	—	PTSIDL	—	—	—	—	—	PTOPS<3:0>				PTCKPS<1:0>		PTMOD<1:0>		0000 0000 0000 0000
P2TMR	05C2	PTDIR	PWM Timer Count Value Register															0000 0000 0000 0000
P2TPER	05C4	—	PWM Time Base Period Register															0000 0000 0000 0000
P2SECMP	05C6	SEVTDIR	PWM Special Event Compare Register															0000 0000 0000 0000
PWM2CON1	05C8	—	—	—	—	—	—	—	PMOD1	—	—	—	PEN1H	—	—	—	PEN1L	0000 0000 1111 1111
PWM2CON2	05CA	—	—	—	—	SEVOPS<3:0>				—	—	—	—	—	IUE	OSYNC	UDIS	0000 0000 0000 0000
P2DTCON1	05CC	DTBPS<1:0>		DTB<5:0>						DTAPS<1:0>		DTA<5:0>						0000 0000 0000 0000
P2DTCON2	05CE	—	—	—	—	—	—	—	—	—	—	—	—	—	—	DTS1A	DTS1I	0000 0000 0000 0000
P2FLTACON	05D0	—	—	—	—	—	—	FAOV1H	FAOV1L	FLTAM	—	—	—	—	—	—	FAEN1	0000 0000 0000 0000
P2OVDCON	05D4	—	—	—	—	—	—	POVD1H	POVD1L	—	—	—	—	—	—	POUT1H	POUT1L	1111 1111 0000 0000
P2DC1	05D6	PWM Duty Cycle #1 Register																0000 0000 0000 0000

Legend: u = uninitialized bit, — = unimplemented, read as '0'

© 2007-2012 Microchip Technology Inc.

TABLE 4-10: QEI1 REGISTER MAP

SFR Name	Addr.	Bit 15	Bit 14	Bit 13	Bit 12	Bit 11	Bit 10	Bit 9	Bit 8	Bit 7	Bit 6	Bit 5	Bit 4	Bit 3	Bit 2	Bit 1	Bit 0	Reset State
QEI1CON	01E0	CNTERR	—	QEISIDL	INDEX	UPDN	QEIM<2:0>			SWPAB	PCDOUT	TQGATE	TQCKPS<1:0>		POSRES	TQCS	UPDN_SRC	0000 0000 0000 0000
DFLT1CON	01E2	—	—	—	—	—	IMV<1:0>		CEID	QEOUT	QECK<2:0>			—	—	—	—	0000 0000 0000 0000
POS1CNT	01E4	Position Counter<15:0>																0000 0000 0000 0000
MAX1CNT	01E6	Maximum Count<15:0>																1111 1111 1111 1111

Legend: u = uninitialized bit, — = unimplemented, read as '0'

TABLE 4-11: I2C1 REGISTER MAP

SFR Name	SFR Addr	Bit 15	Bit 14	Bit 13	Bit 12	Bit 11	Bit 10	Bit 9	Bit 8	Bit 7	Bit 6	Bit 5	Bit 4	Bit 3	Bit 2	Bit 1	Bit 0	All Resets
I2C1RCV	0200	—	—	—	—	—	—	—	—	Receive Register								0000
I2C1TRN	0202	—	—	—	—	—	—	—	—	Transmit Register								00FF
I2C1BRG	0204	—	—	—	—	—	—	—	Baud Rate Generator Register									0000
I2C1CON	0206	I2CEN	—	I2CSIDL	SCLREL	IPMIEN	A10M	DISSLW	SMEN	GCEN	STREN	ACKDT	ACKEN	RCEN	PEN	RSEN	SEN	1000
I2C1STAT	0208	ACKSTAT	TRSTAT	—	—	—	BCL	GCSTAT	ADD10	IWCOL	I2COV	D_A	P	S	R_W	RBF	TBF	0000
I2C1ADD	020A	—	—	—	—	—	—	Address Register										0000
I2C1MSK	020C	—	—	—	—	—	—	Address Mask Register										0000

Legend: x = unknown value on Reset, — = unimplemented, read as '0'. Reset values are shown in hexadecimal.

TABLE 4-12: UART1 REGISTER MAP

SFR Name	SFR Addr	Bit 15	Bit 14	Bit 13	Bit 12	Bit 11	Bit 10	Bit 9	Bit 8	Bit 7	Bit 6	Bit 5	Bit 4	Bit 3	Bit 2	Bit 1	Bit 0	All Resets
U1MODE	0220	UARTEN	—	USIDL	IREN	RTSMD	—	UEN1	UEN0	WAKE	LPBACK	ABAUD	URXINV	BRGH	PDSEL<1:0>		STSEL	0000
U1STA	0222	UTXISEL1	UTXINV	UTXISEL0	—	UTXBRK	UTXEN	UTXBF	TRMT	URXISEL<1:0>		ADDEN	RIDLE	PERR	FERR	OERR	URXDA	0110
U1TXREG	0224	—	—	—	—	—	—	—	UART Transmit Register									xxxx
U1RXREG	0226	—	—	—	—	—	—	—	UART Receive Register									0000
U1BRG	0228	Baud Rate Generator Prescaler																0000

Legend: x = unknown value on Reset, — = unimplemented, read as '0'. Reset values are shown in hexadecimal.

TABLE 4-13: SPI1 REGISTER MAP

SFR Name	SFR Addr	Bit 15	Bit 14	Bit 13	Bit 12	Bit 11	Bit 10	Bit 9	Bit 8	Bit 7	Bit 6	Bit 5	Bit 4	Bit 3	Bit 2	Bit 1	Bit 0	All Resets
SPI1STAT	0240	SPIEN	—	SPISIDL	—	—	—	—	—	—	SPIROV	—	—	—	—	SPITBF	SPIRBF	0000
SPI1CON1	0242	—	—	—	DISSCK	DISSDO	MODE16	SMP	CKE	SSEN	CKP	MSTEN	SPRE<2:0>			PPRE<1:0>		0000
SPI1CON2	0244	FRMEN	SPIFSD	FRMPOL	—	—	—	—	—	—	—	—	—	—	—	FRMDLY	—	0000
SPI1BUF	0248	SPI1 Transmit and Receive Buffer Register																0000

Legend: x = unknown value on Reset, — = unimplemented, read as '0'. Reset values are shown in hexadecimal.

© 2007-2012 Microchip Technology Inc.

TABLE 4-14: ADC1 REGISTER MAP FOR dsPIC33FJ32MC202

File Name	Addr	Bit 15	Bit 14	Bit 13	Bit 12	Bit 11	Bit 10	Bit 9	Bit 8	Bit 7	Bit 6	Bit 5	Bit 4	Bit 3	Bit 2	Bit 1	Bit 0	All Resets
ADC1BUF0	0300	ADC Data Buffer 0																xxxx
ADC1BUF1	0302	ADC Data Buffer 1																xxxx
ADC1BUF2	0304	ADC Data Buffer 2																xxxx
ADC1BUF3	0306	ADC Data Buffer 3																xxxx
ADC1BUF4	0308	ADC Data Buffer 4																xxxx
ADC1BUF5	030A	ADC Data Buffer 5																xxxx
ADC1BUF6	030C	ADC Data Buffer 6																xxxx
ADC1BUF7	030E	ADC Data Buffer 7																xxxx
ADC1BUF8	0310	ADC Data Buffer 8																xxxx
ADC1BUF9	0312	ADC Data Buffer 9																xxxx
ADC1BUFA	0314	ADC Data Buffer 10																xxxx
ADC1BUFB	0316	ADC Data Buffer 11																xxxx
ADC1BUFC	0318	ADC Data Buffer 12																xxxx
ADC1BUFD	031A	ADC Data Buffer 13																xxxx
ADC1BUFE	031C	ADC Data Buffer 14																xxxx
ADC1BUFF	031E	ADC Data Buffer 15																xxxx
AD1CON1	0320	ADON	—	ADSIDL	—	—	AD12B	FORM<1:0>		SSRC<2:0>			—	SIMSAM	ASAM	SAMP	DONE	0000
AD1CON2	0322	VCFG<2:0>			—	—	CSCNA	CHPS<1:0>		BUFS	—	SMPI<3:0>				BUFM	ALTS	0000
AD1CON3	0324	ADRC	—	—	SAMC<4:0>					ADCS<7:0>								0000
AD1CHS123	0326	—	—	—	—	—	CH123NB<1:0>		CH123SB	—	—	—	—	—	CH123NA<1:0>		CH123SA	0000
AD1CHS0	0328	CH0NB	—	—	CH0SB<4:0>					CH0NA	—	—	CH0SA<4:0>					0000
AD1PCFGL	032C	—	—	—	—	—	—	—	—	—	—	PCFG5	PCFG4	PCFG3	PCFG2	PCFG1	PCFG0	0000
AD1CSSL	0330	—	—	—	—	—	—	—	—	—	—	CSS5	CSS4	CSS3	CSS2	CSS1	CSS0	0000

Legend: x = unknown value on Reset, — = unimplemented, read as '0'. Reset values are shown in hexadecimal.

© 2007-2012 Microchip Technology Inc.

TABLE 4-15: ADC1 REGISTER MAP FOR dsPIC33FJ32MC204 AND dsPIC33FJ16MC304

File Name	Addr	Bit 15	Bit 14	Bit 13	Bit 12	Bit 11	Bit 10	Bit 9	Bit 8	Bit 7	Bit 6	Bit 5	Bit 4	Bit 3	Bit 2	Bit 1	Bit 0	All Resets
ADC1BUF0	0300	ADC Data Buffer 0																xxxx
ADC1BUF1	0302	ADC Data Buffer 1																xxxx
ADC1BUF2	0304	ADC Data Buffer 2																xxxx
ADC1BUF3	0306	ADC Data Buffer 3																xxxx
ADC1BUF4	0308	ADC Data Buffer 4																xxxx
ADC1BUF5	030A	ADC Data Buffer 5																xxxx
ADC1BUF6	030C	ADC Data Buffer 6																xxxx
ADC1BUF7	030E	ADC Data Buffer 7																xxxx
ADC1BUF8	0310	ADC Data Buffer 8																xxxx
ADC1BUF9	0312	ADC Data Buffer 9																xxxx
ADC1BUFA	0314	ADC Data Buffer 10																xxxx
ADC1BUFB	0316	ADC Data Buffer 11																xxxx
ADC1BUFC	0318	ADC Data Buffer 12																xxxx
ADC1BUFD	031A	ADC Data Buffer 13																xxxx
ADC1BUFE	031C	ADC Data Buffer 14																xxxx
ADC1BUFF	031E	ADC Data Buffer 15																xxxx
AD1CON1	0320	ADON	—	ADSIDL	—	—	AD12B	FORM<1:0>		SSRC<2:0>			—	SIMSAM	ASAM	SAMP	DONE	0000
AD1CON2	0322	VCFG<2:0>			—	—	CSCNA	CHPS<1:0>		BUFS	—	SMPI<3:0>				BUFM	ALTS	0000
AD1CON3	0324	ADRC	—	—	SAMC<4:0>					ADCS<7:0>								0000
AD1CHS123	0326	—	—	—	—	—	CH123NB<1:0>		CH123SB	—	—	—	—	—	CH123NA<1:0>		CH123SA	0000
AD1CHS0	0328	CH0NB	—	—	CH0SB<4:0>					CH0NA	—	—	CH0SA<4:0>					0000
AD1PCFGL	032C	—	—	—	—	—	—	—	PCFG8	PCFG7	PCFG6	PCFG5	PCFG4	PCFG3	PCFG2	PCFG1	PCFG0	0000
AD1CSSL	0330	—	—	—	—	—	—	—	CSS8	CSS7	CSS6	CSS5	CSS4	CSS3	CSS2	CSS1	CSS0	0000

Legend: x = unknown value on Reset, — = unimplemented, read as '0'. Reset values are shown in hexadecimal.

© 2007-2012 Microchip Technology Inc.

TABLE 4-16: PERIPHERAL PIN SELECT INPUT REGISTER MAP

File Name	Addr	Bit 15	Bit 14	Bit 13	Bit 12	Bit 11	Bit 10	Bit 9	Bit 8	Bit 7	Bit 6	Bit 5	Bit 4	Bit 3	Bit 2	Bit 1	Bit 0	All Resets
RPINR0	0680	—	—	—	INT1R<4:0>					—	—	—	—	—	—	—	—	1F00
RPINR1	0682	—	—	—	—	—	—	—	—	—	—	—	INT2R<4:0>					001F
RPINR3	0686	—	—	—	T3CKR<4:0>					—	—	—	T2CKR<4:0>					1F1F
RPINR7	068E	—	—	—	IC2R<4:0>					—	—	—	IC1R<4:0>					1F1F
RPINR10	0694	—	—	—	IC8R<4:0>					—	—	—	IC7R<4:0>					1F1F
RPINR11	0696	—	—	—	—	—	—	—	—	—	—	—	OCFAR<4:0>					001F
RPINR12	0698	—	—	—	—	—	—	—	—	—	—	—	FLTA1R<4:0>					001F
RPINR13	069A	—	—	—	—	—	—	—	—	—	—	—	FLTA2R<4:0>					001F
RPINR14	069C	—	—	—	QEB1R<4:0>					—	—	—	QEA1R<4:0>					1F1F
RPINR15	069E	—	—	—	—	—	—	—	—	—	—	—	INDX1R<4:0>					001F
RPINR18	06A4	—	—	—	U1CTSR<4:0>					—	—	—	U1RXR<4:0>					1F1F
RPINR20	06A8	—	—	—	SCK1R<4:0>					—	—	—	SDI1R<4:0>					1F1F
RPINR21	06AA	—	—	—	—	—	—	—	—	—	—	—	SS1R<4:0>					001F

Legend: x = unknown value on Reset, — = unimplemented, read as '0'. Reset values are shown in hexadecimal.

TABLE 4-17: PERIPHERAL PIN SELECT OUTPUT REGISTER MAP FOR dsPIC33FJ32MC202

File Name	Addr	Bit 15	Bit 14	Bit 13	Bit 12	Bit 11	Bit 10	Bit 9	Bit 8	Bit 7	Bit 6	Bit 5	Bit 4	Bit 3	Bit 2	Bit 1	Bit 0	All Resets
RPOR0	06C0	—	—	—	RP1R<4:0>					—	—	—	RP0R<4:0>					0000
RPOR1	06C2	—	—	—	RP3R<4:0>					—	—	—	RP2R<4:0>					0000
RPOR2	06C4	—	—	—	RP5R<4:0>					—	—	—	RP4R<4:0>					0000
RPOR3	06C6	—	—	—	RP7R<4:0>					—	—	—	RP6R<4:0>					0000
RPOR4	06C8	—	—	—	RP9R<4:0>					—	—	—	RP8R<4:0>					0000
RPOR5	06CA	—	—	—	RP11R<4:0>					—	—	—	RP10R<4:0>					0000
RPOR6	06CC	—	—	—	RP13R<4:0>					—	—	—	RP12R<4:0>					0000
RPOR7	06CE	—	—	—	RP15R<4:0>					—	—	—	RP14R<4:0>					0000

Legend: x = unknown value on Reset, — = unimplemented, read as '0'. Reset values are shown in hexadecimal.

© 2007-2012 Microchip Technology Inc.

TABLE 4-18: PERIPHERAL PIN SELECT OUTPUT REGISTER MAP FOR dsPIC33FJ32MC204 AND dsPIC33FJ16MC304

File Name	Addr	Bit 15	Bit 14	Bit 13	Bit 12	Bit 11	Bit 10	Bit 9	Bit 8	Bit 7	Bit 6	Bit 5	Bit 4	Bit 3	Bit 2	Bit 1	Bit 0	All Resets
RPOR0	06C0	—	—	—	RP1R<4:0>					—	—	—	RP0R<4:0>					0000
RPOR1	06C2	—	—	—	RP3R<4:0>					—	—	—	RP2R<4:0>					0000
RPOR2	06C4	—	—	—	RP5R<4:0>					—	—	—	RP4R<4:0>					0000
RPOR3	06C6	—	—	—	RP7R<4:0>					—	—	—	RP6R<4:0>					0000
RPOR4	06C8	—	—	—	RP9R<4:0>					—	—	—	RP8R<4:0>					0000
RPOR5	06CA	—	—	—	RP11R<4:0>					—	—	—	RP10R<4:0>					0000
RPOR6	06CC	—	—	—	RP13R<4:0>					—	—	—	RP12R<4:0>					0000
RPOR7	06CE	—	—	—	RP15R<4:0>					—	—	—	RP14R<4:0>					0000
RPOR8	06D0	—	—	—	RP17R<4:0>					—	—	—	RP16R<4:0>					0000
RPOR9	06D2	—	—	—	RP19R<4:0>					—	—	—	RP18R<4:0>					0000
RPOR10	06D4	—	—	—	RP21R<4:0>					—	—	—	RP20R<4:0>					0000
RPOR11	06D6	—	—	—	RP23R<4:0>					—	—	—	RP22R<4:0>					0000
RPOR12	06D8	—	—	—	RP25R<4:0>					—	—	—	RP24R<4:0>					0000

Legend: x = unknown value on Reset, — = unimplemented, read as '0'. Reset values are shown in hexadecimal.

TABLE 4-19: PORTA REGISTER MAP FOR dsPIC33FJ32MC202

File Name	Addr	Bit 15	Bit 14	Bit 13	Bit 12	Bit 11	Bit 10	Bit 9	Bit 8	Bit 7	Bit 6	Bit 5	Bit 4	Bit 3	Bit 2	Bit 1	Bit 0	All Resets
TRISA	02C0	—	—	—	—	—	—	—	—	—	—	—	TRISA4	TRISA3	TRISA2	TRISA1	TRISA0	001F
PORTA	02C2	—	—	—	—	—	—	—	—	—	—	—	RA4	RA3	RA2	RA1	RA0	xxxx
LATA	02C4	—	—	—	—	—	—	—	—	—	—	—	LATA4	LATA3	LATA2	LATA1	LATA0	xxxx
ODCA	02C6	—	—	—	—	—	—	—	—	—	—	—	ODCA4	ODCA3	ODCA2	ODCA1	ODCA0	0000

Legend: x = unknown value on Reset, — = unimplemented, read as '0'. Reset values are shown in hexadecimal.

TABLE 4-20: PORTA REGISTER MAP FOR dsPIC33FJ32MC204 AND dsPIC33FJ16MC304

File Name	Addr	Bit 15	Bit 14	Bit 13	Bit 12	Bit 11	Bit 10	Bit 9	Bit 8	Bit 7	Bit 6	Bit 5	Bit 4	Bit 3	Bit 2	Bit 1	Bit 0	All Resets
TRISA	02C0	—	—	—	—	—	TRISA10	TRISA9	TRISA8	TRISA7	—	—	TRISA4	TRISA3	TRISA2	TRISA1	TRISA0	079F
PORTA	02C2	—	—	—	—	—	RA10	RA9	RA8	RA7	—	—	RA4	RA3	RA2	RA1	RA0	xxxx
LATA	02C4	—	—	—	—	—	LAT10	LAT8	LAT8	LAT7	—	—	LATA4	LATA3	LATA2	LATA1	LATA0	xxxx
ODCA	02C6	—	—	—	—	—	ODCA10	ODCA9	ODCA8	ODCA7	—	—	ODCA4	ODCA3	ODCA2	ODCA1	ODCA0	0000

Legend: x = unknown value on Reset, — = unimplemented, read as '0'. Reset values are shown in hexadecimal.

© 2007-2012 Microchip Technology Inc.

TABLE 4-21: PORTB REGISTER MAP

File Name	Addr	Bit 15	Bit 14	Bit 13	Bit 12	Bit 11	Bit 10	Bit 9	Bit 8	Bit 7	Bit 6	Bit 5	Bit 4	Bit 3	Bit 2	Bit 1	Bit 0	All Resets
TRISB	02C8	TRISB15	TRISB14	TRISB13	TRISB12	TRISB11	TRISB10	TRISB9	TRISB8	TRISB7	TRISB6	TRISB5	TRISB4	TRISB6	TRISB5	TRISB1	TRISB0	FFFF
PORTB	02CA	RB15	RB14	RB13	RB12	RB11	RB10	RB9	RB8	RB7	RB6	RB5	RB4	RB6	RB5	RB1	RB0	xxxx
LATB	02CC	LATB15	LATB14	LATB13	LATB12	LATB11	LATB10	LATB9	LATB8	LATB7	LATB6	LATB5	LATB4	LATB6	LATB5	LATB1	LATB0	xxxx
ODCB	02CE	ODCB15	ODCB14	ODCB13	ODCB12	ODCB11	ODCB10	ODCB9	ODCB8	ODCB7	ODCB6	ODCB5	ODCB4	ODCB6	ODCB5	ODCB1	ODCB0	0000

Legend: x = unknown value on Reset, — = unimplemented, read as '0'. Reset values are shown in hexadecimal for 100-pin devices.

TABLE 4-22: PORTC REGISTER MAP FOR dsPIC33FJ32MC204 AND dsPIC33FJ16MC304

File Name	Addr	Bit 15	Bit 14	Bit 13	Bit 12	Bit 11	Bit 10	Bit 9	Bit 8	Bit 7	Bit 6	Bit 5	Bit 4	Bit 3	Bit 2	Bit 1	Bit 0	All Resets
TRISC	02D0	—	—	—	—	—	—	TRISC9	TRISC8	TRISC7	TRISC6	TRISC5	TRISC4	TRISC6	TRISC5	TRISC1	TRISC0	03FF
PORTC	02D2	—	—	—	—	—	—	RC9	RC8	RC7	RC6	RC5	RC4	RC6	RC5	RC1	RC0	xxxx
LATC	02D4	—	—	—	—	—	—	LATC9	LATC8	LATC7	LATC6	LATC5	LATC4	LATC6	LATC5	LATC1	LATC0	xxxx
ODCC	02D6	—	—	—	—	—	—	ODCC9	ODCC8	ODCC7	ODCC6	ODCC5	ODCC4	ODCC6	ODCC5	ODCC1	ODCC0	0000

Legend: x = unknown value on Reset, — = unimplemented, read as '0'. Reset values are shown in hexadecimal.

TABLE 4-23: SYSTEM CONTROL REGISTER MAP

File Name	Addr	Bit 15	Bit 14	Bit 13	Bit 12	Bit 11	Bit 10	Bit 9	Bit 8	Bit 7	Bit 6	Bit 5	Bit 4	Bit 3	Bit 2	Bit 1	Bit 0	All Resets
RCON	0740	TRAPR	IOPUWR	—	—	—	—	CM	VREGS	EXTR	SWR	SWDTEN	WDTO	SLEEP	IDLE	BOR	POR	xxxx(1)
OSCCON	0742	—	COSC<2:0>			—	NOSC<2:0>			CLKLOCK	IOLOCK	LOCK	—	CF	—	LPOSCEN	OSWEN	0300(2)
CLKDIV	0744	ROI	DOZE<2:0>			DOZEN	FRCDIV<2:0>			PLLPOST<1:0>		—	PLLPRE<4:0>					3040
PLLFBD	0746	—	—	—	—	—	—	—	PLLDIV<8:0>									0030
OSCTUN	0748	—	—	—	—	—	—	—	—	—	—	TUN<5:0>						0000

Legend: x = unknown value on Reset, — = unimplemented, read as '0'. Reset values are shown in hexadecimal.

Note 1: RCON register Reset values dependent on type of Reset.

2: OSCCON register Reset values dependent on the FOSC Configuration bits and by type of Reset.

© 2007-2012 Microchip Technology Inc.

TABLE 4-24: NVM REGISTER MAP

File Name	Addr	Bit 15	Bit 14	Bit 13	Bit 12	Bit 11	Bit 10	Bit 9	Bit 8	Bit 7	Bit 6	Bit 5	Bit 4	Bit 3	Bit 2	Bit 1	Bit 0	All Resets
NVMCON	0760	WR	WREN	WRERR	—	—	—	—	—	—	ERASE	—	—	NVMOP<3:0>				0000(1)
NVMKEY	0766	—	—	—	—	—	—	—	—	NVMKEY<7:0>								0000

Legend: x = unknown value on Reset, — = unimplemented, read as '0'. Reset values are shown in hexadecimal.

Note 1: Reset value shown is for POR only. Value on other Reset states is dependent on the state of memory write or erase operations at the time of Reset.

TABLE 4-25: PMD REGISTER MAP

File Name	Addr	Bit 15	Bit 14	Bit 13	Bit 12	Bit 11	Bit 10	Bit 9	Bit 8	Bit 7	Bit 6	Bit 5	Bit 4	Bit 3	Bit 2	Bit 1	Bit 0	All Resets
PMD1	0770	—	—	T3MD	T2MD	T1MD	QEIMD	PWM1MD	—	I2C1MD	—	U1MD	—	SPI1MD	—	—	AD1MD	0000
PMD2	0772	IC8MD	IC7MD	—	—	—	—	IC2MD	IC1MD	—	—	—	—	—	—	OC2MD	OC1MD	0000
PMD3	0774	—	—	—	—	—	—	—	—	—	—	—	PWM2MD	—	—	—	—	0000

Legend: x = unknown value on Reset, — = unimplemented, read as '0'. Reset values are shown in hexadecimal.

© 2007-2012 Microchip Technology Inc.

4.4.1 SOFTWARE STACK

In addition to its use as a working register, the W15 register in the dsPIC33FJ32MC202/204 and dsPIC33FJ16MC304 devices is also used as a software Stack Pointer. The Stack Pointer always points to the first available free word and grows from lower to higher addresses. It predecrements for stack pops and post-increments for stack pushes, as shown in Figure 4-4. For a PC push during any CALL instruction, the MSb of the PC is zero-extended before the push, ensuring that the MSb is always clear.

Note:	A PC push during exception processing concatenates the SRL register to the MSb of the PC prior to the push.

The Stack Pointer Limit register (SPLIM) associated with the Stack Pointer sets an upper address boundary for the stack. SPLIM is uninitialized at Reset. As is the case for the Stack Pointer, SPLIM<0> is forced to '0' because all stack operations must be word-aligned.

Whenever an EA is generated using W15 as a source or destination pointer, the resulting address is compared with the value in SPLIM. If the contents of the Stack Pointer (W15) and the SPLIM register are equal and a push operation is performed, a stack error trap will not occur. The stack error trap will occur on a subsequent push operation. For example, to cause a stack error trap when the stack grows beyond address 0x1000 in RAM, initialize the SPLIM with the value 0x0FFE.

Similarly, a Stack Pointer underflow (stack error) trap is generated when the Stack Pointer address is found to be less than 0x0800. This prevents the stack from interfering with the Special Function Register (SFR) space.

A write to the SPLIM register should not be immediately followed by an indirect read operation using W15.

FIGURE 4-4: CALL STACK FRAME

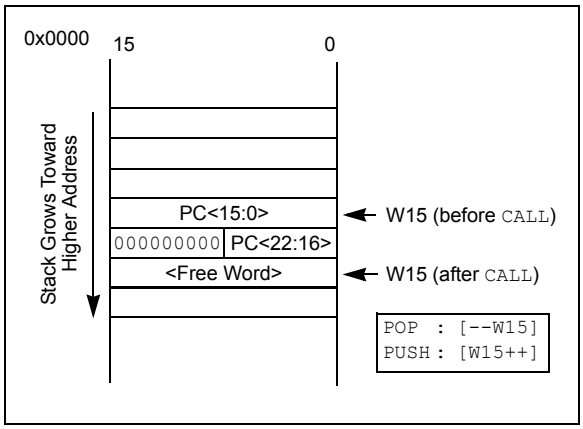

4.4.2 DATA RAM PROTECTION FEATURE

The dsPIC33F product family supports Data RAM protection features that enable segments of RAM to be protected when used in conjunction with Boot and Secure Code Segment Security. BSRAM (Secure RAM segment for BS) is accessible only from the Boot Segment Flash code when enabled. SSRAM (Secure RAM segment for RAM) is accessible only from the Secure Segment Flash code when enabled. See Table 4-1 for an overview of the BSRAM and SSRAM SFRs.

4.5 Instruction Addressing Modes

The addressing modes shown in Table 4-26 form the basis of the addressing modes optimized to support the specific features of individual instructions. The addressing modes provided in the MAC class of instructions differ from those in the other instruction types.

4.5.1 FILE REGISTER INSTRUCTIONS

Most file register instructions use a 13-bit address field (f) to directly address data present in the first 8192 bytes of data memory (near data space). Most file register instructions employ a working register, W0, which is denoted as WREG in these instructions. The destination is typically either the same file register or WREG (with the exception of the MUL instruction), which writes the result to a register or register pair. The MOV instruction allows additional flexibility and can access the entire data space.

4.5.2 MCU INSTRUCTIONS

The three-operand MCU instructions are of the form:

```
Operand 3 = Operand 1 <function> Operand 2
```

where Operand 1 is always a working register (that is, the addressing mode can only be register direct), which is referred to as Wb. Operand 2 can be a W register, fetched from data memory, or a 5-bit literal. The result location can be either a W register or a data memory location. The following addressing modes are supported by MCU instructions:

- Register Direct
- Register Indirect
- Register Indirect Post-Modified
- Register Indirect Pre-Modified
- 5-bit or 10-bit Literal

Note:	Not all instructions support all the addressing modes given above. Individual instructions can support different subsets of these addressing modes.

© 2007-2012 Microchip Technology Inc.

TABLE 4-26: FUNDAMENTAL ADDRESSING MODES SUPPORTED

Addressing Mode	Description
File Register Direct	The address of the file register is specified explicitly.
Register Direct	The contents of a register are accessed directly.
Register Indirect	The contents of Wn forms the Effective Address (EA).
Register Indirect Post-Modified	The contents of Wn forms the EA. Wn is post-modified (incremented or decremented) by a constant value.
Register Indirect Pre-Modified	Wn is pre-modified (incremented or decremented) by a signed constant value to form the EA.
Register Indirect with Register Offset (Register Indexed)	The sum of Wn and Wb forms the EA.
Register Indirect with Literal Offset	The sum of Wn and a literal forms the EA.

4.5.3 MOVE AND ACCUMULATOR INSTRUCTIONS

Move instructions and the DSP accumulator class of instructions provide a greater degree of addressing flexibility than other instructions. In addition to the addressing modes supported by most MCU instructions, move and accumulator instructions also support Register Indirect with Register Offset Addressing mode, also referred to as Register Indexed mode.

Note: For the MOV instructions, the addressing mode specified in the instruction can differ for the source and destination EA. However, the 4-bit Wb (Register Offset) field is shared by both source and destination (but typically only used by one).

In summary, the following addressing modes are supported by move and accumulator instructions:

- Register Direct
- Register Indirect
- Register Indirect Post-modified
- Register Indirect Pre-modified
- Register Indirect with Register Offset (Indexed)
- Register Indirect with Literal Offset
- 8-bit Literal
- 16-bit Literal

Note: Not all instructions support all the addressing modes given above. Individual instructions may support different subsets of these addressing modes.

4.5.4 MAC INSTRUCTIONS

The dual source operand DSP instructions (CLR, ED, EDAC, MAC, MPY, MPY.N, MOVSAC and MSC), also referred to as MAC instructions, use a simplified set of addressing modes to allow the user application to effectively manipulate the data pointers through register indirect tables.

The two-source operand prefetch registers must be members of the set {W8, W9, W10, W11}. For data reads, W8 and W9 are always directed to the X RAGU, and W10 and W11 are always directed to the Y AGU. The effective addresses generated (before and after modification) must, therefore, be valid addresses within X data space for W8 and W9 and Y data space for W10 and W11.

Note: Register Indirect with Register Offset Addressing mode is available only for W9 (in X space) and W11 (in Y space).

In summary, the following addressing modes are supported by the MAC class of instructions:

- Register Indirect
- Register Indirect Post-Modified by 2
- Register Indirect Post-Modified by 4
- Register Indirect Post-Modified by 6
- Register Indirect with Register Offset (Indexed)

4.5.5 OTHER INSTRUCTIONS

Besides the addressing modes outlined previously, some instructions use literal constants of various sizes. For example, BRA (branch) instructions use 16-bit signed literals to specify the branch destination directly, whereas the DISI instruction uses a 14-bit unsigned literal field. In some instructions, such as ADD Acc, the source of an operand or result is implied by the opcode itself. Certain operations, such as NOP, do not have any operands.

4.6 Modulo Addressing

Modulo Addressing mode is a method of providing an automated means to support circular data buffers using hardware. The objective is to remove the need for software to perform data address boundary checks when executing tightly looped code, as is typical in many DSP algorithms.

Modulo Addressing can operate in either data or program space (since the data pointer mechanism is essentially the same for both). One circular buffer can be supported in each of the X (which also provides the pointers into program space) and Y data spaces. Modulo Addressing can operate on any W register pointer. However, it is not advisable to use W14 or W15 for Modulo Addressing since these two registers are used as the Stack Frame Pointer and Stack Pointer, respectively.

In general, any particular circular buffer can be configured to operate in only one direction as there are certain restrictions on the buffer start address (for incrementing buffers), or end address (for decrementing buffers), based upon the direction of the buffer.

The only exception to the usage restrictions is for buffers that have a power-of-two length. As these buffers satisfy the start and end address criteria, they can operate in a bidirectional mode (that is, address boundary checks are performed on both the lower and upper address boundaries).

4.6.1 START AND END ADDRESS

The Modulo Addressing scheme requires that a starting and ending address be specified and loaded into the 16-bit Modulo Buffer Address registers: XMODSRT, XMODEND, YMODSRT and YMODEND (see Table 4-1).

Note: Y space Modulo Addressing EA calculations assume word-sized data (LSb of every EA is always clear).

The length of a circular buffer is not directly specified. It is determined by the difference between the corresponding start and end addresses. The maximum possible length of the circular buffer is 32K words (64 Kbytes).

4.6.2 W ADDRESS REGISTER SELECTION

The Modulo and Bit-Reversed Addressing Control register, MODCON<15:0>, contains enable flags as well as a W register field to specify the W Address registers. The XWM and YWM fields select the registers that will operate with Modulo Addressing:

- If XWM = 15, X RAGU and X WAGU Modulo Addressing is disabled.
- If YWM = 15, Y AGU Modulo Addressing is disabled.

The X Address Space Pointer W register (XWM), to which Modulo Addressing is to be applied, is stored in MODCON<3:0> (see Table 4-1). Modulo Addressing is enabled for X data space when XWM is set to any value other than '15' and the XMODEN bit is set at MODCON<15>.

The Y Address Space Pointer W register (YWM) to which Modulo Addressing is to be applied is stored in MODCON<7:4>. Modulo Addressing is enabled for Y data space when YWM is set to any value other than '15' and the YMODEN bit is set at MODCON<14>.

FIGURE 4-5: MODULO ADDRESSING OPERATION EXAMPLE

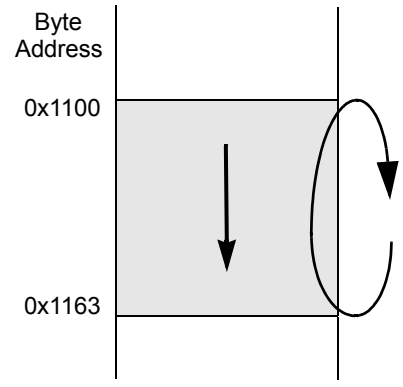


```
MOV     #0x1100, W0
MOV     W0, XMODSRT     ;set modulo start address
MOV     #0x1163, W0
MOV     W0, MODEND      ;set modulo end address
MOV     #0x8001, W0
MOV     W0, MODCON      ;enable W1, X AGU for modulo

MOV     #0x0000, W0     ;W0 holds buffer fill value

MOV     #0x1110, W1     ;point W1 to buffer

DO      AGAIN, #0x31    ;fill the 50 buffer locations
MOV     W0, [W1++]      ;fill the next location
AGAIN:  INC W0, W0      ;increment the fill value
```


© 2007-2012 Microchip Technology Inc.

4.6.3 MODULO ADDRESSING APPLICABILITY

Modulo Addressing can be applied to the Effective Address (EA) calculation associated with any W register. Address boundaries check for addresses equal to:

- The upper boundary addresses for incrementing buffers
- The lower boundary addresses for decrementing buffers

It is important to realize that the address boundaries check for addresses less than or greater than the upper (for incrementing buffers) and lower (for decrementing buffers) boundary addresses (not just equal to). Address changes can, therefore, jump beyond boundaries and still be adjusted correctly.

Note:	The modulo corrected effective address is written back to the register only when Pre-Modify or Post-Modify Addressing mode is used to compute the effective address. When an address offset (such as [W7 + W2]) is used, Modulo Address correction is performed but the contents of the register remain unchanged.

4.7 Bit-Reversed Addressing

Bit-Reversed Addressing mode is intended to simplify data re-ordering for radix-2 FFT algorithms. It is supported by the X AGU for data writes only.

The modifier, which can be a constant value or register contents, is regarded as having its bit order reversed. The address source and destination are kept in normal order. Thus, the only operand requiring reversal is the modifier.

4.7.1 BIT-REVERSED ADDRESSING IMPLEMENTATION

Bit-Reversed Addressing mode is enabled in any of these situations:

- BWM bits (W register selection) in the MODCON register are any value other than '15' (the stack cannot be accessed using Bit-Reversed Addressing)
- The BREN bit is set in the XBREV register
- The addressing mode used is Register Indirect with Pre-Increment or Post-Increment

If the length of a bit-reversed buffer is $M = 2^N$ bytes, the last 'N' bits of the data buffer start address must be zeros.

XB<14:0> is the Bit-Reversed Address modifier, or 'pivot point', which is typically a constant. In the case of an FFT computation, its value is equal to half of the FFT data buffer size.

Note:	All bit-reversed EA calculations assume word-sized data (LSb of every EA is always clear). The XB value is scaled accordingly to generate compatible (byte) addresses.

When enabled, Bit-Reversed Addressing is executed only for Register Indirect with Pre-Increment or Post-Increment Addressing and word-sized data writes. It will not function for any other addressing mode or for byte-sized data, and normal addresses are generated instead. When Bit-Reversed Addressing is active, the W Address Pointer is always added to the address modifier (XB), and the offset associated with the Register Indirect Addressing mode is ignored. In addition, as word-sized data is a requirement, the LSb of the EA is ignored (and always clear).

Note:	Modulo Addressing and Bit-Reversed Addressing should not be enabled together. If an application attempts to do so, Bit-Reversed Addressing will assume priority when active for the X WAGU and X WAGU, Modulo Addressing will be disabled. However, Modulo Addressing will continue to function in the X RAGU.

If Bit-Reversed Addressing has already been enabled by setting the BREN bit (XBREV<15>), a write to the XBREV register should not be immediately followed by an indirect read operation using the W register that has been designated as the bit-reversed pointer.

FIGURE 4-6: BIT-REVERSED ADDRESS EXAMPLE

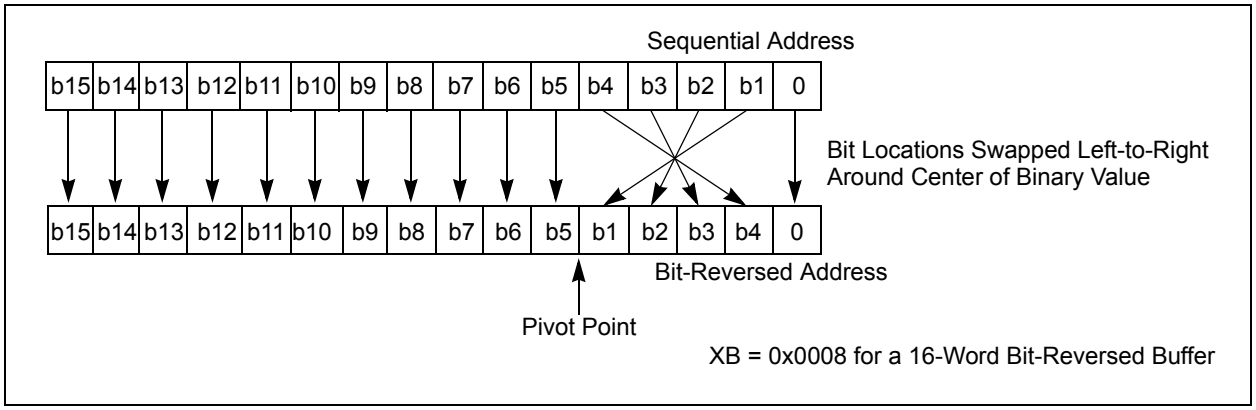

TABLE 4-27: BIT-REVERSED ADDRESS SEQUENCE (16-ENTRY)

Normal Address					Bit-Reversed Address				
A3	**A2**	**A1**	**A0**	**Decimal**	**A3**	**A2**	**A1**	**A0**	**Decimal**
0	0	0	0	0	0	0	0	0	0
0	0	0	1	1	1	0	0	0	8
0	0	1	0	2	0	1	0	0	4
0	0	1	1	3	1	1	0	0	12
0	1	0	0	4	0	0	1	0	2
0	1	0	1	5	1	0	1	0	10
0	1	1	0	6	0	1	1	0	6
0	1	1	1	7	1	1	1	0	14
1	0	0	0	8	0	0	0	1	1
1	0	0	1	9	1	0	0	1	9
1	0	1	0	10	0	1	0	1	5
1	0	1	1	11	1	1	0	1	13
1	1	0	0	12	0	0	1	1	3
1	1	0	1	13	1	0	1	1	11
1	1	1	0	14	0	1	1	1	7
1	1	1	1	15	1	1	1	1	15

© 2007-2012 Microchip Technology Inc.

4.8 Interfacing Program and Data Memory Spaces

The dsPIC33FJ32MC202/204 and dsPIC33FJ16MC304 architecture uses a 24-bit-wide program space and a 16-bit-wide data space. The architecture is also a modified Harvard scheme, meaning that data can also be present in the program space. To use this data successfully, it must be accessed in a way that preserves the alignment of information in both spaces.

Aside from normal execution, the dsPIC33FJ32MC202/204 and dsPIC33FJ16MC304 architecture provides two methods by which program space can be accessed during operation:

- Using table instructions to access individual bytes or words anywhere in the program space
- Remapping a portion of the program space into the data space (Program Space Visibility)

Table instructions allow an application to read or write to small areas of the program memory. This capability makes the method ideal for accessing data tables that need to be updated periodically. It also allows access to all bytes of the program word. The remapping method allows an application to access a large block of data on a read-only basis, which is ideal for look-ups from a large table of static data. The application can only access the least significant word of the program word.

4.8.1 ADDRESSING PROGRAM SPACE

Since the address ranges for the data and program spaces are 16 and 24 bits, respectively, a method is needed to create a 23-bit or 24-bit program address from 16-bit data registers. The solution depends on the interface method to be used.

For table operations, the 8-bit Table Page register (TBLPAG) is used to define a 32K word region within the program space. This is concatenated with a 16-bit EA to arrive at a full 24-bit program space address. In this format, the Most Significant bit of TBLPAG is used to determine if the operation occurs in the user memory (TBLPAG<7> = 0) or the configuration memory (TBLPAG<7> = 1).

For remapping operations, the 8-bit Program Space Visibility register (PSVPAG) is used to define a 16K word page in the program space. When the Most Significant bit of the EA is '1', PSVPAG is concatenated with the lower 15 bits of the EA to form a 23-bit program space address. Unlike table operations, this limits remapping operations strictly to the user memory area.

Table 4-28 and Figure 4-7 show how the program EA is created for table operations and remapping accesses from the data EA. Here, P<23:0> refers to a program space word, and D<15:0> refers to a data space word.

TABLE 4-28: PROGRAM SPACE ADDRESS CONSTRUCTION

Access Type	Access Space	Program Space Address				
		<23>	<22:16>	<15>	<14:1>	<0>
Instruction Access (Code Execution)	User	0	PC<22:1>			0
		0xx xxxx xxxx xxxx xxxx xxx0				
TBLRD/TBLWT (Byte/Word Read/Write)	User	TBLPAG<7:0>		Data EA<15:0>		
		0xxx xxxx	xxxx xxxx xxxx xxxx			
	Configuration	TBLPAG<7:0>		Data EA<15:0>		
		1xxx xxxx	xxxx xxxx xxxx xxxx			
Program Space Visibility (Block Remap/Read)	User	0	PSVPAG<7:0>		Data EA<14:0>(1)	
		0	xxxx xxxx		xxx xxxx xxxx xxxx	

Note 1: Data EA<15> is always '1' in this case, but is not used in calculating the program space address. Bit 15 of the address is PSVPAG<0>.

FIGURE 4-7: DATA ACCESS FROM PROGRAM SPACE ADDRESS GENERATION

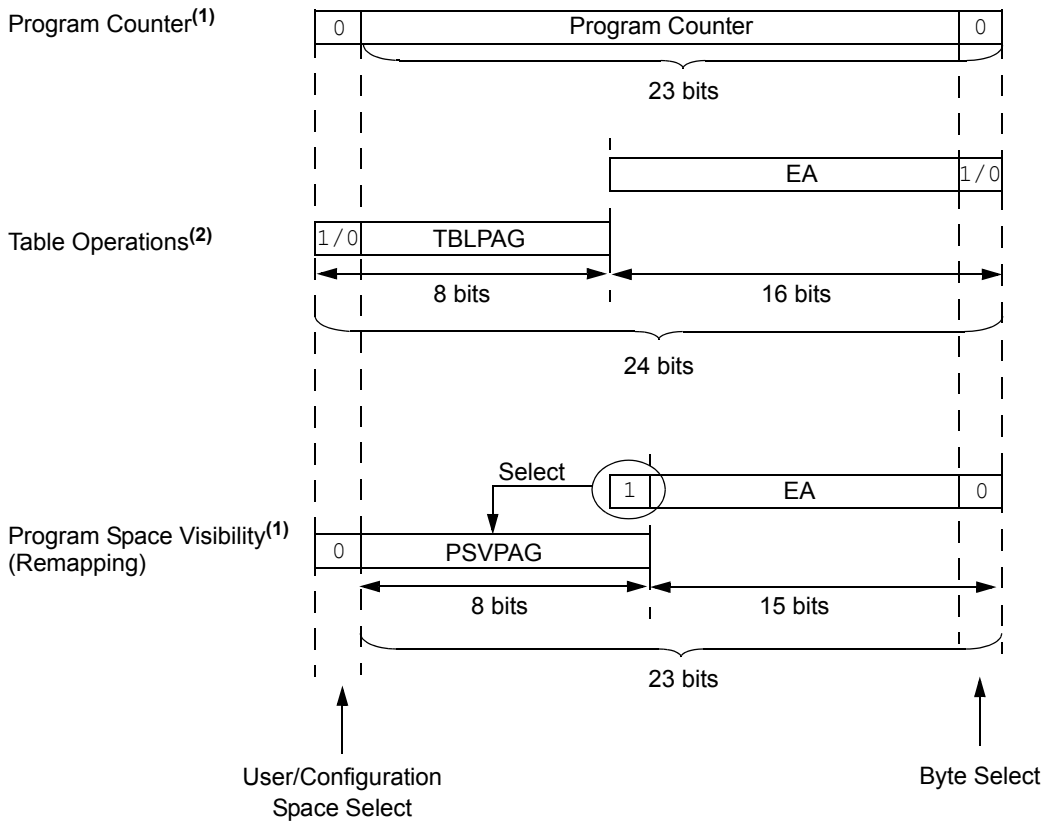

Note 1: The Least Significant bit (LSb) of program space addresses is always fixed as '0' to maintain word alignment of data in the program and data spaces.

2: Table operations are not required to be word-aligned. Table read operations are permitted in the configuration memory space.

© 2007-2012 Microchip Technology Inc.

4.8.2 DATA ACCESS FROM PROGRAM MEMORY USING TABLE INSTRUCTIONS

The TBLRDL and TBLWTL instructions offer a direct method of reading or writing the lower word of any address within the program space without going through data space. The TBLRDH and TBLWTH instructions are the only method to read or write the upper 8 bits of a program space word as data.

The PC is incremented by two for each successive 24-bit program word. This allows program memory addresses to directly map to data space addresses. Program memory can thus be regarded as two 16-bit-wide word address spaces, residing side by side, each with the same address range. TBLRDL and TBLWTL access the space that contains the least significant data word. TBLRDH and TBLWTH access the space that contains the upper data byte.

Two table instructions are provided to move byte or word-sized (16-bit) data to and from program space. Both function as either byte or word operations.

- TBLRDL (Table Read Low):
  - In Word mode, this instruction maps the lower word of the program space location (P<15:0>) to a data address (D<15:0>).
  - In Byte mode, either the upper or lower byte of the lower program word is mapped to the lower byte of a data address. The upper byte is selected when Byte Select is '1'; the lower byte is selected when it is '0'.
- TBLRDH (Table Read High):
  - In Word mode, this instruction maps the entire upper word of a program address (P<23:16>) to a data address. Note that D<15:8>, the 'phantom byte', will always be '0'.
  - In Byte mode, this instruction maps the upper or lower byte of the program word to D<7:0> of the data address, in the TBLRDL instruction. The data is always '0' when the upper 'phantom' byte is selected (Byte Select = 1).

In a similar fashion, two table instructions, TBLWTH and TBLWTL, are used to write individual bytes or words to a program space address. The details of their operation are explained in **Section 5.0 "Flash Program Memory"**.

For all table operations, the area of program memory space to be accessed is determined by the Table Page register (TBLPAG). TBLPAG covers the entire program memory space of the device, including user and configuration spaces. When TBLPAG<7> = 0, the table page is located in the user memory space. When TBLPAG<7> = 1, the page is located in configuration space.

FIGURE 4-8: ACCESSING PROGRAM MEMORY WITH TABLE INSTRUCTIONS

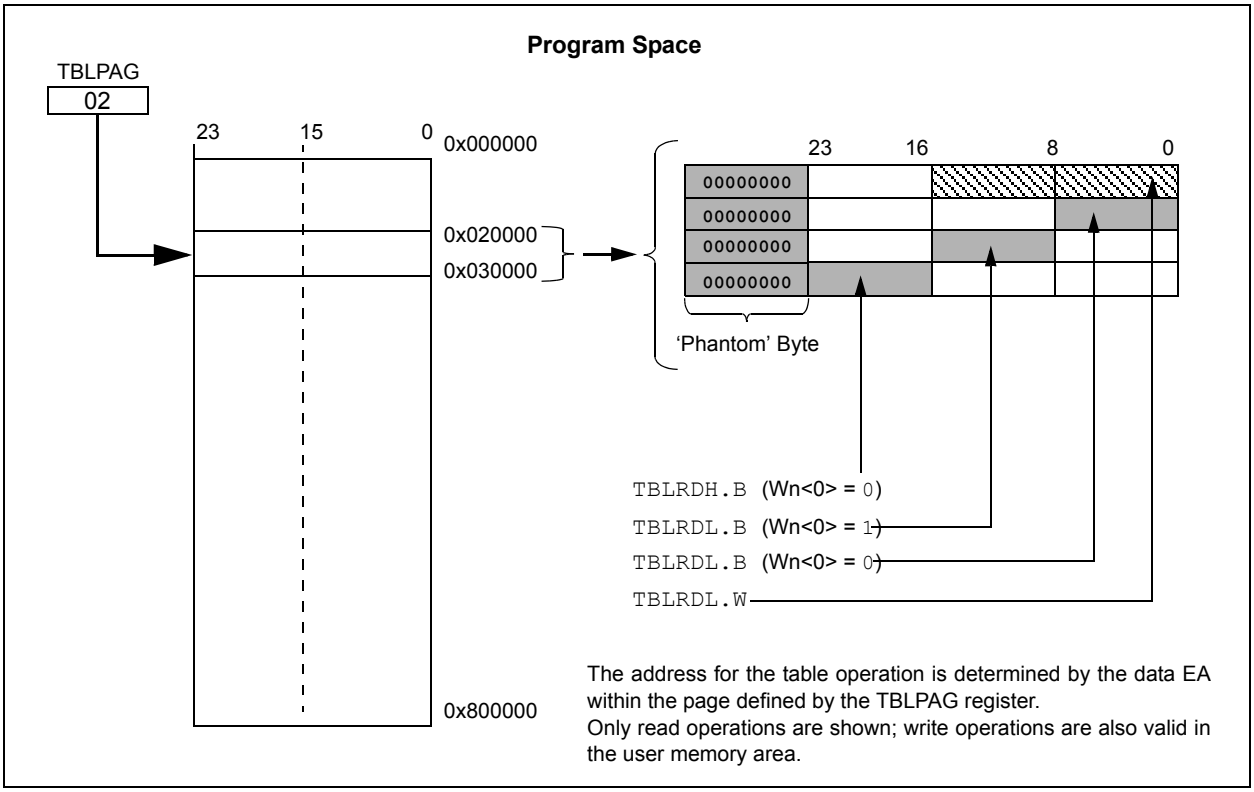

4.8.3 READING DATA FROM PROGRAM MEMORY USING PROGRAM SPACE VISIBILITY

The upper 32 Kbytes of data space may optionally be mapped into any 16K word page of the program space. This option provides transparent access to stored constant data from the data space without the need to use special instructions (such as TBLRDL/H).

Program space access through the data space occurs if the Most Significant bit of the data space EA is '1' and program space visibility is enabled by setting the PSV bit in the Core Control register (CORCON<2>). The location of the program memory space to be mapped into the data space is determined by the Program Space Visibility Page register (PSVPAG). This 8-bit register defines any one of 256 possible pages of 16K words in program space. In effect, PSVPAG functions as the upper 8 bits of the program memory address, with the 15 bits of the EA functioning as the lower bits. By incrementing the PC by 2 for each program memory word, the lower 15 bits of data space addresses directly map to the lower 15 bits in the corresponding program space addresses.

Data reads to this area add a cycle to the instruction being executed, since two program memory fetches are required.

Although each data space address 8000h and higher maps directly into a corresponding program memory address (see Figure 4-9), only the lower 16 bits of the 24-bit program word are used to contain the data. The upper 8 bits of any program space location used as data should be programmed with '1111 1111' or '0000 0000' to force a NOP. This prevents possible issues should the area of code ever be accidentally executed.

Note:	PSV access is temporarily disabled during table reads/writes.

For operations that use PSV and are executed outside a REPEAT loop, the MOV and MOV.D instructions require one instruction cycle in addition to the specified execution time. All other instructions require two instruction cycles in addition to the specified execution time.

For operations that use PSV, and are executed inside a REPEAT loop, these instances require two instruction cycles in addition to the specified execution time of the instruction:

- Execution in the first iteration
- Execution in the last iteration
- Execution prior to exiting the loop due to an interrupt
- Execution upon re-entering the loop after an interrupt is serviced

Any other iteration of the REPEAT loop will allow the instruction using PSV to access data, to execute in a single cycle.

FIGURE 4-9: PROGRAM SPACE VISIBILITY OPERATION

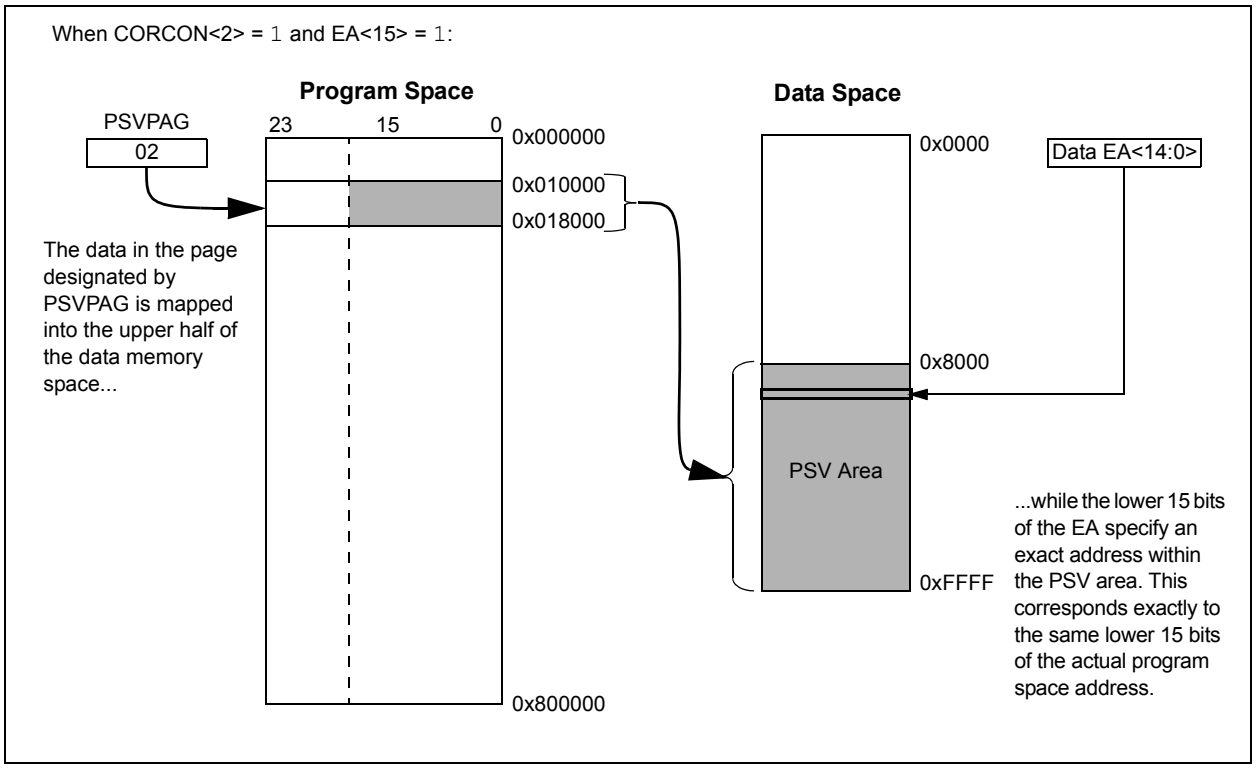

© 2007-2012 Microchip Technology Inc.

5.0 FLASH PROGRAM MEMORY

Note 1: This data sheet summarizes the features of the dsPIC33FJ32MC202/204 and dsPIC33FJ16MC304 devices. It is not intended to be a comprehensive reference source. To complement the information in this data sheet, refer to **Section 5. "Flash Programming"** (DS70191) of the *"dsPIC33F/PIC24H Family Reference Manual"* which is available from the Microchip web site (www.microchip.com)

2: Some registers and associated bits described in this section may not be available on all devices. Refer to **Section 4.0 "Memory Organization"** in this data sheet for device-specific register and bit information.

The dsPIC33FJ32MC202/204 and dsPIC33FJ16MC304 devices contain internal Flash program memory for storing and executing application code. The memory is readable, writable and erasable during normal operation over the entire VDD range.

Flash memory can be programmed in two ways:

- In-Circuit Serial Programming™ (ICSP™) programming capability
- Run-Time Self-Programming (RTSP)

ICSP allows a dsPIC33FJ32MC202/204 and dsPIC33FJ16MC304 device to be serially programmed while in the end application circuit. This is done with two lines for programming clock and programming data (one of the alternate programming pin pairs: PGECx/PGEDx), and three other lines for power (VDD), ground (VSS) and Master Clear ($\overline{MCLR}$). This allows customers to manufacture boards with unprogrammed devices and then program the digital signal controller just before shipping the product. This also allows the most recent firmware or a custom firmware to be programmed.

RTSP is accomplished using TBLRD (table read) and TBLWT (table write) instructions. With RTSP, the user application can write program memory data either in blocks or 'rows' of 64 instructions (192 bytes) at a time or a single program memory word, and erase program memory in blocks or 'pages' of 512 instructions (1536 bytes) at a time.

5.1 Table Instructions and Flash Programming

Regardless of the method used, all programming of Flash memory is done with the table read and table write instructions. These allow direct read and write access to the program memory space from the data memory while the device is in normal operating mode. The 24-bit target address in the program memory is formed using bits <7:0> of the TBLPAG register and the Effective Address (EA) from a W register specified in the table instruction, as shown in Figure 5-1.

The TBLRDL and the TBLWTL instructions are used to read or write to bits <15:0> of program memory. TBLRDL and TBLWTL can access program memory in both Word and Byte modes.

The TBLRDH and TBLWTH instructions are used to read or write to bits <23:16> of program memory. TBLRDH and TBLWTH can also access program memory in Word or Byte mode.

FIGURE 5-1: ADDRESSING FOR TABLE REGISTERS

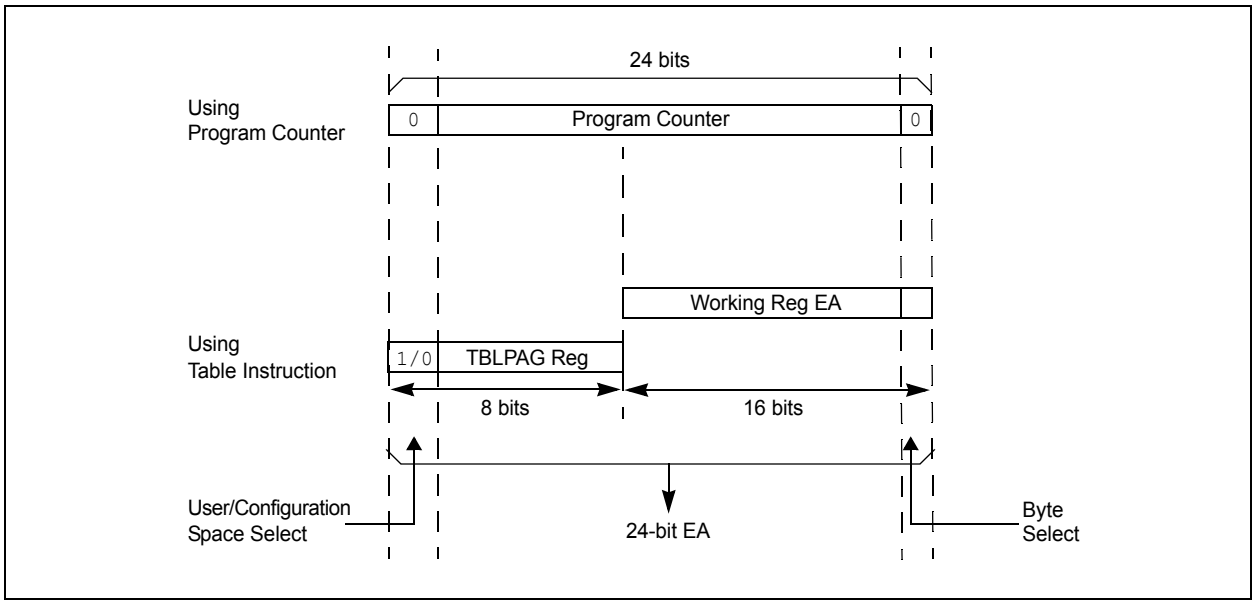

5.2 RTSP Operation

The dsPIC33FJ32MC202/204 and dsPIC33FJ16MC304 Flash program memory array is organized into rows of 64 instructions or 192 bytes. RTSP allows the user application to erase a page of memory, which consists of eight rows (512 instructions) at a time, and to program one row or one word at a time. Table 24-12 shows typical erase and programming times. The 8-row erase pages and single row write rows are edge-aligned from the beginning of program memory, on boundaries of 1536 bytes and 192 bytes, respectively.

The program memory implements holding buffers that can contain 64 instructions of programming data. Prior to the actual programming operation, the write data must be loaded into the buffers sequentially. The instruction words loaded must always be from a group of 64 boundary.

The basic sequence for RTSP programming is to set up a Table Pointer, then do a series of `TBLWT` instructions to load the buffers. Programming is performed by setting the control bits in the NVMCON register. A total of 64 `TBLWTL` and `TBLWTH` instructions are required to load the instructions.

All of the table write operations are single-word writes (two instruction cycles) because only the buffers are written. A programming cycle is required for programming each row.

5.3 Programming Operations

A complete programming sequence is necessary for programming or erasing the internal Flash in RTSP mode. The processor stalls (waits) until the programming operation is finished.

The programming time depends on the FRC accuracy (see Table 24-18, **"AC Characteristics: Internal RC Accuracy"**) and the value of the FRC Oscillator Tuning register (see Register 8-4). Use the following formula to calculate the minimum and maximum values for the Row Write Time, Page Erase Time, and Word Write Cycle Time parameters (see Table 24-12, **"DC Characteristics: Program Memory"**).

EQUATION 5-1: PROGRAMMING TIME

$$\frac{T}{7.37\ MHz \times (FRC\ Accuracy)\% \times (FRC\ Tuning)\%}$$

For example, if the device is operating at +125° C, the FRC accuracy will be ±5%. If the TUN<5:0> bits (see Register 8-4) are set to `'b111111`,the minimum row write time is equal to Equation 5-2.

EQUATION 5-2: MINIMUM ROW WRITE TIME

$$T_{RW} = \frac{11064\ Cycles}{7.37\ MHz \times (1 + 0.05) \times (1 - 0.00375)} = 1.435ms$$

The maximum row write time is equal to Equation 5-3.

EQUATION 5-3: MAXIMUM ROW WRITE TIME

$$T_{RW} = \frac{11064\ Cycles}{7.37\ MHz \times (1 - 0.05) \times (1 - 0.00375)} = 1.586ms$$

Setting the WR bit (NVMCON<15>) starts the operation, and the WR bit is automatically cleared when the operation is finished.

5.4 Flash Memory Resources

Many useful resources are provided on the main product page of the Microchip web site for the devices listed in this data sheet. This product page, which can be accessed using this link, contains the latest updates and additional information.

Note: In the event you are not able to access the product page using the link above, enter this URL in your browser: http://www.microchip.com/wwwproducts/Devices.aspx?dDocName=en530334

5.4.1 KEY RESOURCES

- **Section 5. "Flash Programming"** (DS70191)
- Code Samples
- Application Notes
- Software Libraries
- Webinars
- All related dsPIC33F/PIC24H Family Reference Manuals Sections
- Development Tools

5.5 Control Registers

Two SFRs are used to read and write the program Flash memory: NVMCON and NVMKEY.

The NVMCON register (Register 5-1) controls which blocks are to be erased, which memory type is to be programmed and the start of the programming cycle.

NVMKEY is a write-only register that is used for write protection. To start a programming or erase sequence, the user application must consecutively write 0x55 and 0xAA to the NVMKEY register. Refer to **Section 5.3 "Programming Operations"** for further details.

© 2007-2012 Microchip Technology Inc.

REGISTER 5-1: NVMCON: FLASH MEMORY CONTROL REGISTER

R/SO-0(1)	R/W-0(1)	R/W-0(1)	U-0	U-0	U-0	U-0	U-0
WR	WREN	WRERR	—	—	—	—	—
bit 15							bit 8

U-0	R/W-0(1)	U-0	U-0	R/W-0(1)	R/W-0(1)	R/W-0(1)	R/W-0(1)
—	ERASE	—	—	NVMOP<3:0>(2)			
bit 7							bit 0

Legend:	SO = Settable Only bit		
R = Readable bit	W = Writable bit	U = Unimplemented bit, read as '0'	
-n = Value at POR	'1' = Bit is set	'0' = Bit is cleared	x = Bit is unknown

bit 15 **WR:** Write Control bit
- 1 = Initiates a Flash memory program or erase operation. The operation is self-timed and the bit is cleared by hardware once operation is complete
- 0 = Program or erase operation is complete and inactive

bit 14 **WREN:** Write Enable bit
- 1 = Enable Flash program/erase operations
- 0 = Inhibit Flash program/erase operations

bit 13 **WRERR:** Write Sequence Error Flag bit
- 1 = An improper program or erase sequence attempt or termination has occurred (bit is set automatically on any set attempt of the WR bit)
- 0 = The program or erase operation completed normally

bit 12-7 **Unimplemented:** Read as '0'

bit 6 **ERASE:** Erase/Program Enable bit
- 1 = Perform the erase operation specified by NVMOP<3:0> on the next WR command
- 0 = Perform the program operation specified by NVMOP<3:0> on the next WR command

bit 5-4 **Unimplemented:** Read as '0'

bit 3-0 **NVMOP<3:0>:** NVM Operation Select bits(2)

If ERASE = 1:
- 1111 = Memory bulk erase operation
- 1101 = Erase General Segment
- 1100 = Erase Secure Segment
- 0011 = No operation
- 0010 = Memory page erase operation
- 0001 = No operation
- 0000 = Erase a single Configuration register byte

If ERASE = 0:
- 1111 = No operation
- 1101 = No operation
- 1100 = No operation
- 0011 = Memory word program operation
- 0010 = No operation
- 0001 = Memory row program operation
- 0000 = Program a single Configuration register byte

Note 1: These bits can only be Reset on a POR.

2: All other combinations of NVMOP<3:0> are unimplemented.

REGISTER 5-2: NVMKEY: NONVOLATILE MEMORY KEY REGISTER

U-0	U-0	U-0	U-0	U-0	U-0	U-0	U-0
—	—	—	—	—	—	—	—
bit 15							bit 8

W-0	W-0	W-0	W-0	W-0	W-0	W-0	W-0
NVMKEY<7:0>							
bit 7							bit 0

Legend:	SO = Settable Only bit		
R = Readable bit	W = Writable bit	U = Unimplemented bit, read as ‘0’	
-n = Value at POR	‘1’ = Bit is set	‘0’ = Bit is cleared	x = Bit is unknown

bit 15-8 **Unimplemented:** Read as ‘0’

bit 7-0 **NVMKEY<7:0>:** Key Register (write-only) bits

© 2007-2012 Microchip Technology Inc.

5.5.1 PROGRAMMING ALGORITHM FOR FLASH PROGRAM MEMORY

Programmers can program one row of program Flash memory at a time. To do this, it is necessary to erase the 8-row erase page that contains the desired row. The general process is:

1. Read eight rows of program memory (512 instructions) and store in data RAM.
2. Update the program data in RAM with the desired new data.
3. Erase the block (see Example 5-1):
   a) Set the NVMOP bits (NVMCON<3:0>) to '0010' to configure for block erase. Set the ERASE (NVMCON<6>) and WREN (NVMCON<14>) bits.
   b) Write the starting address of the page to be erased into the TBLPAG and W registers.
   c) Write 0x55 to NVMKEY.
   d) Write 0xAA to NVMKEY.
   e) Set the WR bit (NVMCON<15>). The erase cycle begins and the CPU stalls for the duration of the erase cycle. When the erase is done, the WR bit is cleared automatically.
4. Write the first 64 instructions from data RAM into the program memory buffers (see Example 5-2).
5. Write the program block to Flash memory:
   a) Set the NVMOP bits to '0001' to configure for row programming. Clear the ERASE bit and set the WREN bit.
   b) Write 0x55 to NVMKEY.
   c) Write 0xAA to NVMKEY.
   d) Set the WR bit. The programming cycle begins and the CPU stalls for the duration of the write cycle. When the write to Flash memory is done, the WR bit is cleared automatically.
6. Repeat steps 4 and 5, using the next available 64 instructions from the block in data RAM by incrementing the value in TBLPAG, until all 512 instructions are written back to Flash memory.

For protection against accidental operations, the write initiate sequence for NVMKEY must be used to allow any erase or program operation to proceed. After the programming command has been executed, the user application must wait for the programming time until programming is complete. The two instructions following the start of the programming sequence should be NOPs, as shown in Example 5-3.

EXAMPLE 5-1: ERASING A PROGRAM MEMORY PAGE

```
; Set up NVMCON for block erase operation
        MOV     #0x4042, W0                 ;
        MOV     W0, NVMCON                  ; Initialize NVMCON
; Init pointer to row to be ERASED
        MOV     #tblpage(PROG_ADDR), W0     ;
        MOV     W0, TBLPAG                  ; Initialize PM Page Boundary SFR
        MOV     #tbloffset(PROG_ADDR), W0   ; Initialize in-page EA[15:0] pointer
        TBLWTL  W0, [W0]                    ; Set base address of erase block
        DISI    #5                          ; Block all interrupts with priority <7
                                            ; for next 5 instructions
        MOV     #0x55, W0
        MOV     W0, NVMKEY                  ; Write the 55 key
        MOV     #0xAA, W1                   ;
        MOV     W1, NVMKEY                  ; Write the AA key
        BSET    NVMCON, #WR                 ; Start the erase sequence
        NOP                                 ; Insert two NOPs after the erase
        NOP                                 ; command is asserted
```

EXAMPLE 5-2: LOADING THE WRITE BUFFERS

```
; Set up NVMCON for row programming operations
        MOV     #0x4001, W0             ;
        MOV     W0, NVMCON              ; Initialize NVMCON
; Set up a pointer to the first program memory location to be written
; program memory selected, and writes enabled
        MOV     #0x0000, W0             ;
        MOV     W0, TBLPAG              ; Initialize PM Page Boundary SFR
        MOV     #0x6000, W0             ; An example program memory address
; Perform the TBLWT instructions to write the latches
; 0th_program_word
        MOV     #LOW_WORD_0, W2         ;
        MOV     #HIGH_BYTE_0, W3        ;
        TBLWTL  W2, [W0]                ; Write PM low word into program latch
        TBLWTH  W3, [W0++]              ; Write PM high byte into program latch
; 1st_program_word
        MOV     #LOW_WORD_1, W2         ;
        MOV     #HIGH_BYTE_1, W3        ;
        TBLWTL  W2, [W0]                ; Write PM low word into program latch
        TBLWTH  W3, [W0++]              ; Write PM high byte into program latch
;  2nd_program_word
        MOV     #LOW_WORD_2, W2         ;
        MOV     #HIGH_BYTE_2, W3        ;
        TBLWTL  W2, [W0]                ; Write PM low word into program latch
        TBLWTH  W3, [W0++]              ; Write PM high byte into program latch
        •
        •
        •
; 63rd_program_word
        MOV     #LOW_WORD_31, W2        ;
        MOV     #HIGH_BYTE_31, W3       ;
        TBLWTL  W2, [W0]                ; Write PM low word into program latch
        TBLWTH  W3, [W0++]              ; Write PM high byte into program latch
```

EXAMPLE 5-3: INITIATING A PROGRAMMING SEQUENCE

```
        DISI    #5                      ; Block all interrupts with priority <7
                                        ; for next 5 instructions
        MOV     #0x55, W0
        MOV     W0, NVMKEY              ; Write the 55 key
        MOV     #0xAA, W1               ;
        MOV     W1, NVMKEY              ; Write the AA key
        BSET    NVMCON, #WR             ; Start the erase sequence
        NOP                             ; Insert two NOPs after the
        NOP                             ; erase command is asserted
```


© 2007-2012 Microchip Technology Inc.

6.0 RESETS

Note 1: This data sheet summarizes the features of the dsPIC33FJ32MC202/204 and dsPIC33FJ16MC304 family of devices. It is not intended to be a comprehensive reference source. To complement the information in this data sheet, refer to **Section 8. "Reset"** (DS70192) of the *"dsPIC33F/PIC24H Family Reference Manual"*, which is available from the Microchip web site (www.microchip.com).

2: Some registers and associated bits described in this section may not be available on all devices. Refer to **Section 4.0 "Memory Organization"** in this data sheet for device-specific register and bit information.

The Reset module combines all reset sources and controls the device Master Reset Signal, $\overline{\text{SYSRST}}$. The following is a list of device Reset sources:

- POR: Power-on Reset
- BOR: Brown-out Reset
- $\overline{\text{MCLR}}$: Master Clear Pin Reset
- SWR: RESET Instruction
- WDTO: Watchdog Timer Reset
- CM: Configuration Mismatch Reset
- TRAPR: Trap Conflict Reset
- IOPUWR: Illegal Condition Device Reset
  - Illegal Opcode Reset
  - Uninitialized W Register Reset
  - Security Reset

A simplified block diagram of the Reset module is shown in Figure 6-1.

Any active source of reset will make the $\overline{\text{SYSRST}}$ signal active. On system Reset, some of the registers associated with the CPU and peripherals are forced to a known Reset state and some are unaffected.

Note: Refer to the specific peripheral section or **Section 3.0 "CPU"** of this manual for register Reset states.

All types of device Reset sets a corresponding status bit in the RCON register to indicate the type of Reset (see Register 6-1).

A POR clears all the bits, except for the POR bit (RCON<0>), that are set. The user application can set or clear any bit at any time during code execution. The RCON bits only serve as status bits. Setting a particular Reset status bit in software does not cause a device Reset to occur.

The RCON register also has other bits associated with the Watchdog Timer and device power-saving states. The function of these bits is discussed in other sections of this manual.

Note: The status bits in the RCON register should be cleared after they are read so that the next RCON register value after a device Reset is meaningful.

FIGURE 6-1: RESET SYSTEM BLOCK DIAGRAM

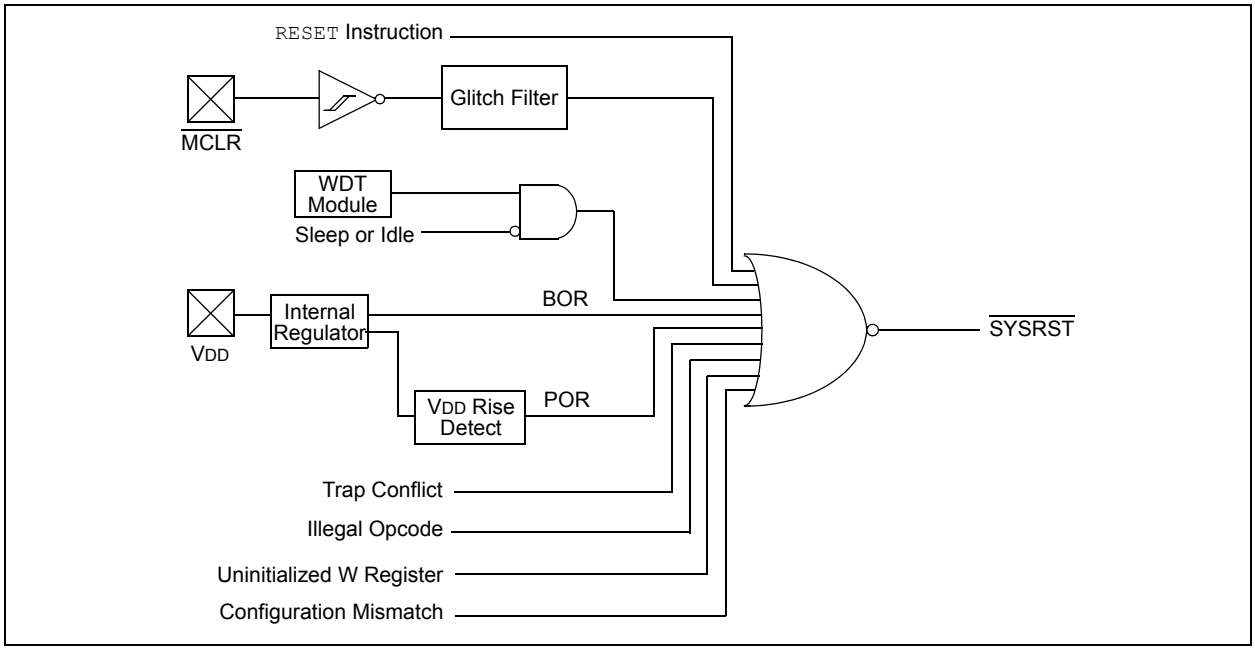

6.1 Resets Resources

Many useful resources are provided on the main product page of the Microchip web site for the devices listed in this data sheet. This product page, which can be accessed using this link, contains the latest updates and additional information.

Note:	In the event you are not able to access the product page using the link above, enter this URL in your browser: http://www.microchip.com/wwwproducts/Devices.aspx?dDocName=en530334

6.1.1 KEY RESOURCES

- **Section 8. "Reset"** (DS70192)
- Code Samples
- Application Notes
- Software Libraries
- Webinars
- All related dsPIC33F/PIC24H Family Reference Manuals Sections
- Development Tools

© 2007-2012 Microchip Technology Inc.

6.2 Reset Control Registers

REGISTER 6-1: RCON: RESET CONTROL REGISTER(1)

R/W-0	R/W-0	U-0	U-0	U-0	U-0	R/W-0	R/W-0
TRAPR	IOPUWR	—	—	—	—	CM	VREGS
bit 15							bit 8

R/W-0	R/W-0	R/W-0	R/W-0	R/W-0	R/W-0	R/W-1	R/W-1
EXTR	SWR	SWDTEN(2)	WDTO	SLEEP	IDLE	BOR	POR
bit 7							bit 0

Legend:			
R = Readable bit	W = Writable bit	U = Unimplemented bit, read as '0'	
-n = Value at POR	'1' = Bit is set	'0' = Bit is cleared	x = Bit is unknown

bit 15 **TRAPR:** Trap Reset Flag bit
1 = A Trap Conflict Reset has occurred
0 = A Trap Conflict Reset has not occurred

bit 14 **IOPUWR:** Illegal Opcode or Uninitialized W Access Reset Flag bit
1 = An illegal opcode detection, an illegal address mode or uninitialized W register used as an Address Pointer caused a Reset
0 = An illegal opcode or uninitialized W Reset has not occurred

bit 13-10 **Unimplemented:** Read as '0'

bit 9 **CM:** Configuration Mismatch Flag bit
1 = A configuration mismatch Reset has occurred
0 = A configuration mismatch Reset has NOT occurred

bit 8 **VREGS:** Voltage Regulator Standby During Sleep bit
1 = Voltage regulator is active during Sleep
0 = Voltage regulator goes into Standby mode during Sleep

bit 7 **EXTR:** External Reset ($\overline{\text{MCLR}}$) Pin bit
1 = A Master Clear (pin) Reset has occurred
0 = A Master Clear (pin) Reset has not occurred

bit 6 **SWR:** Software Reset (Instruction) Flag bit
1 = A RESET instruction has been executed
0 = A RESET instruction has not been executed

bit 5 **SWDTEN:** Software Enable/Disable of WDT bit(2)
1 = WDT is enabled
0 = WDT is disabled

bit 4 **WDTO:** Watchdog Timer Time-out Flag bit
1 = WDT time-out has occurred
0 = WDT time-out has not occurred

bit 3 **SLEEP:** Wake-up from Sleep Flag bit
1 = Device has been in Sleep mode
0 = Device has not been in Sleep mode

Note 1: All of the Reset status bits can be set or cleared in software. Setting one of these bits in software does not cause a device Reset.

2: If the FWDTEN Configuration bit is '1' (unprogrammed), the WDT is always enabled, regardless of the SWDTEN bit setting.

REGISTER 6-1: RCON: RESET CONTROL REGISTER(1) (CONTINUED)

bit 2 **IDLE:** Wake-up from Idle Flag bit
1 = Device was in Idle mode
0 = Device was not in Idle mode

bit 1 **BOR:** Brown-out Reset Flag bit
1 = A Brown-out Reset has occurred
0 = A Brown-out Reset has not occurred

bit 0 **POR:** Power-on Reset Flag bit
1 = A Power-on Reset has occurred
0 = A Power-on Reset has not occurred

Note 1: All of the Reset status bits can be set or cleared in software. Setting one of these bits in software does not cause a device Reset.

2: If the FWDTEN Configuration bit is '1' (unprogrammed), the WDT is always enabled, regardless of the SWDTEN bit setting.

© 2007-2012 Microchip Technology Inc.

6.3 System Reset

The dsPIC33FJ32MC202/204 and dsPIC33FJ16MC304 family of devices have two types of Reset:

- Cold Reset
- Warm Reset

A cold Reset is the result of a Power-on Reset (POR) or a Brown-out Reset (BOR). On a cold Reset, the FNOSC configuration bits in the FOSC device configuration register selects the device clock source.

A warm Reset is the result of all other reset sources, including the RESET instruction. On warm Reset, the device will continue to operate from the current clock source as indicated by the Current Oscillator Selection bits (COSC<2:0>) in the Oscillator Control register (OSCCON<14:12>).

The device is kept in a Reset state until the system power supplies have stabilized at appropriate levels and the oscillator clock is ready. The sequence in which this occurs is shown in Figure 6-2.

TABLE 6-1: OSCILLATOR PARAMETERS

Oscillator Mode	Oscillator Start-up Delay	Oscillator Start-up Timer	PLL Lock Time	Total Delay
FRC, FRCDIV16, FRCDIVN	TOSCD	—	—	TOSCD
FRCPLL	TOSCD	—	TLOCK	TOSCD + TLOCK
XT	TOSCD	TOST	—	TOSCD + TOST
HS	TOSCD	TOST	—	TOSCD + TOST
EC	—	—	—	—
XTPLL	TOSCD	TOST	TLOCK	TOSCD + TOST + TLOCK
HSPLL	TOSCD	TOST	TLOCK	TOSCD + TOST + TLOCK
ECPLL	—	—	TLOCK	TLOCK
SOSC	TOSCD	TOST	—	TOSCD + TOST
LPRC	TOSCD	—	—	TOSCD

Note 1: TOSCD = Oscillator Start-up Delay (1.1 μs max for FRC, 70 μs max for LPRC). Crystal Oscillator start-up times vary with crystal characteristics, load capacitance, etc.

2: TOST = Oscillator Start-up Timer Delay (1024 oscillator clock period). For example, TOST = 102.4 μs for a 10 MHz crystal and TOST = 32 ms for a 32 kHz crystal.

3: TLOCK = PLL lock time (1.5 ms nominal), if PLL is enabled.

FIGURE 6-2: SYSTEM RESET TIMING

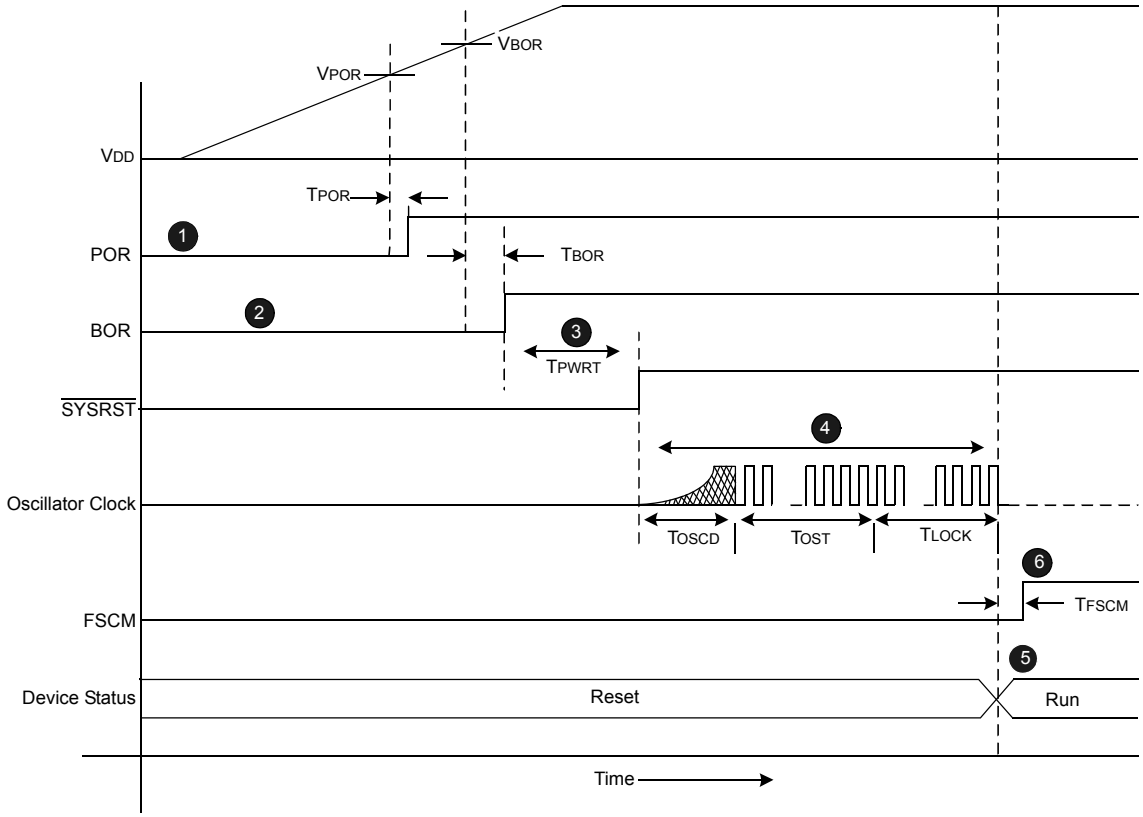

Note 1: **POR:** A POR circuit holds the device in Reset when the power supply is turned on. The POR circuit is active until VDD crosses the VPOR threshold and the delay TPOR has elapsed.

2: **BOR:** The on-chip voltage regulator has a BOR circuit that keeps the device in Reset until VDD crosses the VBOR threshold and the delay TBOR has elapsed. The delay TBOR ensures the voltage regulator output becomes stable.

3: **PWRT Timer:** The programmable power-up timer continues to hold the processor in Reset for a specific period of time (TPWRT) after a BOR. The delay TPWRT ensures that the system power supplies have stabilized at the appropriate level for full-speed operation. After the delay TPWRT has elapsed, the SYSRST becomes inactive, which in turn enables the selected oscillator to start generating clock cycles.

4: **Oscillator Delay:** The total delay for the clock to be ready for various clock source selections are given in Table 6-1. Refer to **Section 8.0 "Oscillator Configuration"** for more information.

5: When the oscillator clock is ready, the processor begins execution from location 0x000000. The user application programs a GOTO instruction at the reset address, which redirects program execution to the appropriate start-up routine.

6: The Fail-Safe Clock Monitor (FSCM), if enabled, begins to monitor the system clock when the system clock is ready and the delay TFSCM elapsed.

© 2007-2012 Microchip Technology Inc.

TABLE 6-2: OSCILLATOR DELAY

Symbol	Parameter	Value
VPOR	POR threshold	1.8V nominal
TPOR	POR extension time	30 μs maximum
VBOR	BOR threshold	2.5V nominal
TBOR	BOR extension time	100 μs maximum
TPWRT	Programmable power-up time delay	0-128 ms nominal
TFSCM	Fail-Safe Clock Monitor Delay	900 μs maximum

Note: When the device exits the Reset condition (begins normal operation), the device operating parameters (voltage, frequency, temperature, etc.) must be within their operating ranges, otherwise the device may not function correctly. The user application must ensure that the delay between the time power is first applied, and the time SYSRST becomes inactive, is long enough to get all operating parameters within specification.

6.4 Power-on Reset (POR)

A Power-on Reset (POR) circuit ensures the device is reset from power-on. The POR circuit is active until VDD crosses the VPOR threshold and the delay TPOR has elapsed. The delay TPOR ensures the internal device bias circuits become stable.

The device supply voltage characteristics must meet the specified starting voltage and rise rate requirements to generate the POR. Refer to **Section 24.0 "Electrical Characteristics"** for details.

The POR status bit (POR) in the Reset Control register (RCON<0>) is set to indicate the Power-on Reset.

6.4.1 Brown-out Reset (BOR) and Power-up timer (PWRT)

The on-chip regulator has a Brown-out Reset (BOR) circuit that resets the device when the VDD is too low (VDD < VBOR) for proper device operation. The BOR circuit keeps the device in Reset until VDD crosses VBOR threshold and the delay TBOR has elapsed. The delay TBOR ensures the voltage regulator output becomes stable.

The BOR status bit (BOR) in the Reset Control register (RCON<1>) is set to indicate the Brown-out Reset.

The device will not run at full speed after a BOR as the VDD should rise to acceptable levels for full-speed operation. The PWRT provides power-up time delay (TPWRT) to ensure that the system power supplies have stabilized at the appropriate levels for full-speed operation before the SYSRST is released.

The power-up timer delay (TPWRT) is programmed by the Power-on Reset Timer Value Select bits (FPWRT<2:0>) in the POR Configuration register (FPOR<2:0>), which provides eight settings (from 0 ms to 128 ms). Refer to **Section 21.0 "Special Features"** for further details.

Figure 6-3 shows the typical brown-out scenarios. The reset delay (TBOR + TPWRT) is initiated each time VDD rises above the VBOR trip point

FIGURE 6-3: BROWN-OUT SITUATIONS

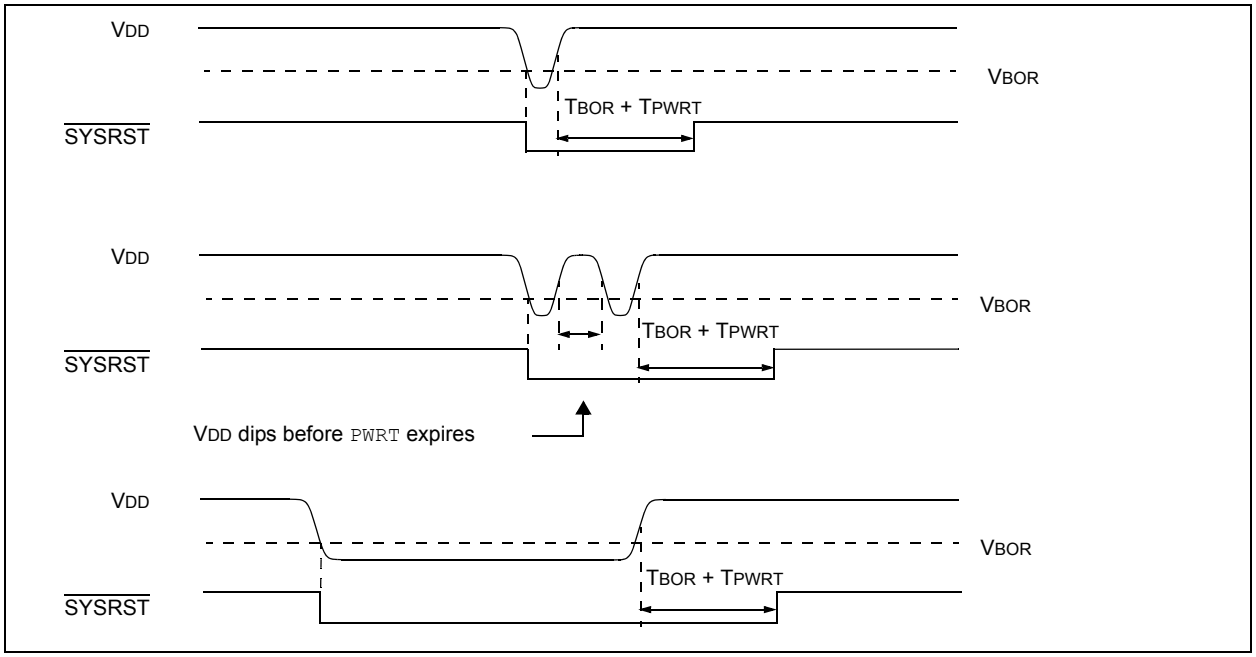

6.5 External Reset (EXTR)

The external Reset is generated by driving the MCLR pin low. The MCLR pin is a Schmitt trigger input with an additional glitch filter. Reset pulses that are longer than the minimum pulse-width will generate a Reset. Refer to **Section 24.0 "Electrical Characteristics"** for minimum pulse-width specifications. The External Reset (MCLR) Pin (EXTR) bit in the Reset Control register (RCON) is set to indicate the MCLR Reset.

6.5.1 EXTERNAL SUPERVISORY CIRCUIT

Many systems have external supervisory circuits that generate reset signals to Reset multiple devices in the system. This external Reset signal can be directly connected to the MCLR pin to Reset the device when the rest of system is Reset.

6.5.2 INTERNAL SUPERVISORY CIRCUIT

When using the internal power supervisory circuit to Reset the device, the external reset pin (MCLR) should be tied directly or resistively to VDD. In this case, the MCLR pin will not be used to generate a Reset. The external reset pin (MCLR) does not have an internal pull-up and must not be left unconnected.

6.6 Software RESET Instruction (SWR)

Whenever the RESET instruction is executed, the device will assert SYSRST, placing the device in a special Reset state. This Reset state will not re-initialize the clock. The clock source in effect prior to the RESET instruction will remain. SYSRST is released at the next instruction cycle, and the reset vector fetch will commence.

The Software Reset (Instruction) Flag (SWR) bit in the Reset Control register (RCON<6>) is set to indicate the software Reset.

6.7 Watchdog Time-out Reset (WDTO)

Whenever a Watchdog time-out occurs, the device will asynchronously assert SYSRST. The clock source will remain unchanged. A WDT time-out during Sleep or Idle mode will wake-up the processor, but will not reset the processor.

The Watchdog Timer Time-out Flag bit (WDTO) in the Reset Control register (RCON<4>) is set to indicate the Watchdog Reset. Refer to **Section 21.4 "Watchdog Timer (WDT)"** for more information on Watchdog Reset.

6.8 Trap Conflict Reset

If a lower-priority hard trap occurs while a higher-priority trap is being processed, a hard trap conflict Reset occurs. The hard traps include exceptions of priority level 13 through level 15, inclusive. The address error (level 13) and oscillator error (level 14) traps fall into this category.

The Trap Reset Flag bit (TRAPR) in the Reset Control register (RCON<15>) is set to indicate the Trap Conflict Reset. Refer to **Section 7.0 "Interrupt Controller"** for more information on trap conflict Resets.

© 2007-2012 Microchip Technology Inc.

6.9 Configuration Mismatch Reset

To maintain the integrity of the peripheral pin select control registers, they are constantly monitored with shadow registers in hardware. If an unexpected change in any of the registers occur (such as cell disturbances caused by ESD or other external events), a configuration mismatch Reset occurs.

The Configuration Mismatch Flag bit (CM) in the Reset Control register (RCON<9>) is set to indicate the configuration mismatch Reset. Refer to **Section 10.0 "I/O Ports"** for more information on the configuration mismatch Reset.

Note:	The configuration mismatch feature and associated reset flag is not available on all devices.

6.10 Illegal Condition Device Reset

An illegal condition device Reset occurs due to the following sources:

- Illegal Opcode Reset
- Uninitialized W Register Reset
- Security Reset

The Illegal Opcode or Uninitialized W Access Reset Flag bit (IOPUWR) in the Reset Control register (RCON<14>) is set to indicate the illegal condition device Reset.

6.10.1 ILLEGAL OPCODE RESET

A device Reset is generated if the device attempts to execute an illegal opcode value that is fetched from program memory.

The illegal opcode Reset function can prevent the device from executing program memory sections that are used to store constant data. To take advantage of the illegal opcode Reset, use only the lower 16 bits of each program memory section to store the data values. The upper 8 bits should be programmed with 3Fh, which is an illegal opcode value.

6.10.2 UNINITIALIZED W REGISTER RESET

Any attempts to use the uninitialized W register as an address pointer will Reset the device. The W register array (with the exception of W15) is cleared during all resets and is considered uninitialized until written to.

6.10.3 SECURITY RESET

If a Program Flow Change (PFC) or Vector Flow Change (VFC) targets a restricted location in a protected segment (Boot and Secure Segment), that operation will cause a security Reset.

The PFC occurs when the Program Counter is reloaded as a result of a Call, Jump, Computed Jump, Return, Return from Subroutine, or other form of branch instruction.

The VFC occurs when the Program Counter is reloaded with an Interrupt or Trap vector.

Refer to **Section 21.8 "Code Protection and CodeGuard™ Security"** for more information on Security Reset.

6.11 Using the RCON Status Bits

The user application can read the Reset Control register (RCON) after any device Reset to determine the cause of the reset.

Note:	The status bits in the RCON register should be cleared after they are read so that the next RCON register value after a device Reset will be meaningful.

Table 6-3 provides a summary of the reset flag bit operation.

TABLE 6-3: RESET FLAG BIT OPERATION

Flag Bit	Set by:	Cleared by:
TRAPR (RCON<15>)	Trap conflict event	POR,BOR
IOPWR (RCON<14>)	Illegal opcode or uninitialized W register access or Security Reset	POR,BOR
CM (RCON<9>)	Configuration Mismatch	POR,BOR
EXTR (RCON<7>)	$\overline{\text{MCLR}}$ Reset	POR
SWR (RCON<6>)	`RESET` instruction	POR,BOR
WDTO (RCON<4>)	WDT time-out	`PWRSAV` instruction, `CLRWDT` instruction, POR,BOR
SLEEP (RCON<3>)	`PWRSAV #SLEEP` instruction	POR,BOR
IDLE (RCON<2>)	`PWRSAV #IDLE` instruction	POR,BOR
BOR (RCON<1>)	POR, BOR	—
POR (RCON<0>)	POR	—

Note: All Reset flag bits can be set or cleared by user software.

NOTES:

© 2007-2012 Microchip Technology Inc.

7.0 INTERRUPT CONTROLLER

Note 1: This data sheet summarizes the features of the dsPIC33FJ32MC202/204 and dsPIC33FJ16MC304 devices. It is not intended to be a comprehensive reference source. To complement the information in this data sheet, refer to **Section 32. "Interrupts (Part III)"** (DS70214) of the "*dsPIC33F/PIC24H Family Reference Manual*", which is available from the Microchip web site (www.microchip.com).

2: Some registers and associated bits described in this section may not be available on all devices. Refer to **Section 4.0 "Memory Organization"** in this data sheet for device-specific register and bit information.

The dsPIC33FJ32MC202/204 and dsPIC33FJ16MC304 interrupt controller reduces the numerous peripheral interrupt request signals to a single interrupt request signal to the dsPIC33FJ32MC202/204 and dsPIC33FJ16MC304 CPU. It has the following features:

- Up to 8 processor exceptions and software traps
- 7 user-selectable priority levels
- Interrupt Vector Table (IVT) with up to 118 vectors
- A unique vector for each interrupt or exception source
- Fixed priority within a specified user priority level
- Alternate Interrupt Vector Table (AIVT) for debug support
- Fixed interrupt entry and return latencies

7.1 Interrupt Vector Table

The Interrupt Vector Table (IVT) is shown in Figure 7-1. The IVT resides in program memory, starting at location 000004h. The IVT contains 126 vectors consisting of 8 nonmaskable trap vectors plus up to 118 sources of interrupt. In general, each interrupt source has its own vector. Each interrupt vector contains a 24-bit-wide address. The value programmed into each interrupt vector location is the starting address of the associated Interrupt Service Routine (ISR).

Interrupt vectors are prioritized in terms of their natural priority. This priority is linked to their position in the vector table. Lower addresses generally have a higher natural priority. For example, the interrupt associated with vector 0 will take priority over interrupts at any other vector address.

dsPIC33FJ32MC202/204 and dsPIC33FJ16MC304 devices implement up to 26 unique interrupts and 4 nonmaskable traps. These are summarized in Table 7-1 and Table 7-2.

7.1.1 ALTERNATE INTERRUPT VECTOR TABLE

The Alternate Interrupt Vector Table (AIVT) is located after the IVT, as shown in Figure 7-1. Access to the AIVT is provided by the ALTIVT control bit (INTCON2<15>). If the ALTIVT bit is set, all interrupt and exception processes use the alternate vectors instead of the default vectors. The alternate vectors are organized in the same manner as the default vectors.

The AIVT supports debugging by providing a means to switch between an application and a support environment without requiring the interrupt vectors to be reprogrammed. This feature also enables switching between applications for evaluation of different software algorithms at run time. If the AIVT is not needed, the AIVT should be programmed with the same addresses used in the IVT.

7.2 Reset Sequence

A device Reset is not a true exception because the interrupt controller is not involved in the Reset process. The dsPIC33FJ32MC202/204 and dsPIC33FJ16MC304 device clears its registers in response to a Reset, which forces the PC to zero. The digital signal controller then begins program execution at location 0x000000. A `GOTO` instruction at the Reset address can redirect program execution to the appropriate start-up routine.

Note: Any unimplemented or unused vector locations in the IVT and AIVT should be programmed with the address of a default interrupt handler routine that contains a `RESET` instruction.

FIGURE 7-1: dsPIC33FJ32MC202/204 and dsPIC33FJ16MC304 INTERRUPT VECTOR TABLE

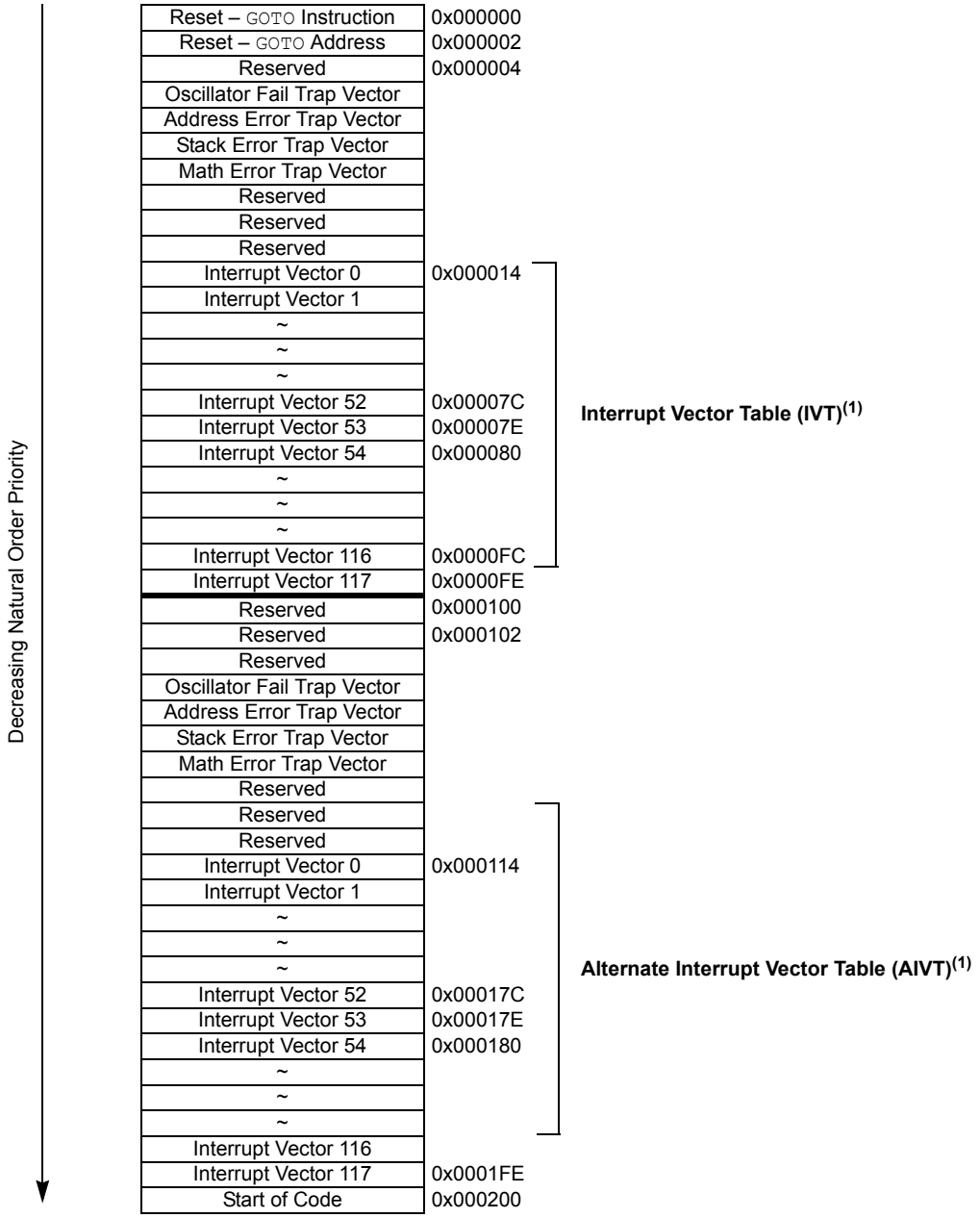

Note 1: See Table 7-1 for the list of implemented interrupt vectors.

© 2007-2012 Microchip Technology Inc.

TABLE 7-1: INTERRUPT VECTORS

Vector Number	Interrupt Request (IRQ) Number	IVT Address	AIVT Address	Interrupt Source
8	0	0x000014	0x000114	INT0 – External Interrupt 0
9	1	0x000016	0x000116	IC1 – Input Capture 1
10	2	0x000018	0x000118	OC1 – Output Compare 1
11	3	0x00001A	0x00011A	T1 – Timer1
12	4	0x00001C	0x00011C	Reserved
13	5	0x00001E	0x00011E	IC2 – Input Capture 2
14	6	0x000020	0x000120	OC2 – Output Compare 2
15	7	0x000022	0x000122	T2 – Timer2
16	8	0x000024	0x000124	T3 – Timer3
17	9	0x000026	0x000126	SPI1E – SPI1 Error
18	10	0x000028	0x000128	SPI1 – SPI1 Transfer Done
19	11	0x00002A	0x00012A	U1RX – UART1 Receiver
20	12	0x00002C	0x00012C	U1TX – UART1 Transmitter
21	13	0x00002E	0x00012E	ADC1 – ADC1
22-23	14-15	0x000030-0x000032	0x000130-0x000132	Reserved
24	16	0x000034	0x000134	SI2C1 – I2C1 Slave Events
25	17	0x000036	0x000136	MI2C1 – I2C1 Master Events
26	18	0x000038	0x000138	Reserved
27	19	0x00003A	0x00013A	Change Notification Interrupt
28	20	0x00003C	0x00013C	INT1 – External Interrupt 1
29	21	0x00003E	0x00013E	Reserved
30	22	0x000040	0x000140	IC7 – Input Capture 7
31	23	0x000042	0x000142	IC8 – Input Capture 8
32-36	24-28	0x000044-0x00004C	0x000144-0x00014C	Reserved
37	29	0x00004E	0x00014E	INT2 – External Interrupt 2
38-64	30-56	0x000050-0x000084	0x000150-0x000184	Reserved
65	57	0x000086	0x000186	PWM1 – PWM1 Period Match
66	58	0x000088	0x000188	QEI – Position Counter Compare
67-70	59-62	0x00008A-0x000090	0x00018A-0x000190	Reserved
71	63	0x000092	0x000192	$\overline{\text{FLTA1}}$ – PWM1 Fault A
72	64	0x000094	0x000194	Reserved
73	65	0x000096	0x000196	U1E – UART1 Error
74-80	66-72	0x000098-0x0000A4	0x000198-0x0001A4	Reserved
81	73	0x0000A6	0x0001A6	PWM2 – PWM2 Period Match
82	74	0x0000A8	0x0001A8	$\overline{\text{FLTA2}}$ – PWM2 Fault A
83-125	75-117	0x0000AA-0x0000FE	0x0001AA-0x0001FE	Reserved

TABLE 7-2: TRAP VECTORS

Vector Number	IVT Address	AIVT Address	Trap Source
0	0x000004	0x000104	Reserved
1	0x000006	0x000106	Oscillator Failure
2	0x000008	0x000108	Address Error
3	0x00000A	0x00010A	Stack Error
4	0x00000C	0x00010C	Math Error
5	0x00000E	0x00010E	Reserved
6	0x000010	0x000110	Reserved
7	0x000012	0x000112	Reserved

7.3 Interrupt Resources

Many useful resources are provided on the main product page of the Microchip web site for the devices listed in this data sheet. This product page, which can be accessed using this link, contains the latest updates and additional information.

Note:	In the event you are not able to access the product page using the link above, enter this URL in your browser: http://www.microchip.com/wwwproducts/Devices.aspx?dDocName=en530334

7.3.1 KEY RESOURCES

- **Section 6. "Interrupts"** (DS70184)
- Code Samples
- Application Notes
- Software Libraries
- Webinars
- All related dsPIC33F/PIC24H Family Reference Manuals Sections
- Development Tools

7.4 Interrupt Control and Status Registers

dsPIC33FJ32MC202/204 and dsPIC33FJ16MC304 devices implement a total of 22 registers for the interrupt controller:

- INTCON1
- INTCON2
- IFSx
- IECx
- IPCx
- INTTREG

7.4.1 INTCON1 AND INTCON2

Global interrupt control functions are controlled from INTCON1 and INTCON2. INTCON1 contains the Interrupt Nesting Disable bit (NSTDIS) as well as the control and status flags for the processor trap sources. The INTCON2 register controls the external interrupt request signal behavior and the use of the Alternate Interrupt Vector Table.

7.4.2 IFSx

The IFS registers maintain all of the interrupt request flags. Each source of interrupt has a status bit, which is set by the respective peripherals or external signal and is cleared via software.

7.4.3 IECx

The IEC registers maintain all of the interrupt enable bits. These control bits are used to individually enable interrupts from the peripherals or external signals.

7.4.4 IPCx

The IPC registers are used to set the interrupt priority level for each source of interrupt. Each user interrupt source can be assigned to one of eight priority levels.

7.4.5 INTTREG

The INTTREG register contains the associated interrupt vector number and the new CPU interrupt priority level, which are latched into vector number (VECNUM<6:0>) and Interrupt level bit (ILR<3:0>) fields in the INTTREG register. The new interrupt priority level is the priority of the pending interrupt.

The interrupt sources are assigned to the IFSx, IECx and IPCx registers in the same sequence that they are listed in Table 7-1. For example, the INT0 (External Interrupt 0) is shown as having vector number 8 and a natural order priority of 0. Thus, the INT0IF bit is found in IFS0<0>, the INT0IE bit in IEC0<0>, and the INT0IP bits in the first position of IPC0 (IPC0<2:0>).

7.4.6 STATUS/CONTROL REGISTERS

Although they are not specifically part of the interrupt control hardware, two of the CPU Control registers contain bits that control interrupt functionality.

- The CPU STATUS register, SR, contains the IPL<2:0> bits (SR<7:5>). These bits indicate the current CPU interrupt priority level. The user can change the current CPU priority level by writing to the IPL bits.
- The CORCON register contains the IPL3 bit which, together with IPL<2:0>, also indicates the current CPU priority level. IPL3 is a read-only bit so that trap events cannot be masked by the user software.

All Interrupt registers are described in Register 7-1 through Register 7-24 in the following pages.

© 2007-2012 Microchip Technology Inc.

REGISTER 7-1: SR: CPU STATUS REGISTER(1)

R-0	R-0	R/C-0	R/C-0	R-0	R/C-0	R -0	R/W-0
OA	OB	SA	SB	OAB	SAB	DA	DC
bit 15							bit 8

R/W-0(3)	R/W-0(3)	R/W-0(3)	R-0	R/W-0	R/W-0	R/W-0	R/W-0
IPL2(2)	**IPL1(2)**	**IPL0(2)**	RA	N	OV	Z	C
bit 7							bit 0

Legend:		
C = Clear only bit	R = Readable bit	U = Unimplemented bit, read as '0'
S = Set only bit	W = Writable bit	-n = Value at POR
'1' = Bit is set	'0' = Bit is cleared	x = Bit is unknown

bit 7-5 **IPL<2:0>:** CPU Interrupt Priority Level Status bits(2)
111 = CPU Interrupt Priority Level is 7 (15), user interrupts disabled
110 = CPU Interrupt Priority Level is 6 (14)
101 = CPU Interrupt Priority Level is 5 (13)
100 = CPU Interrupt Priority Level is 4 (12)
011 = CPU Interrupt Priority Level is 3 (11)
010 = CPU Interrupt Priority Level is 2 (10)
001 = CPU Interrupt Priority Level is 1 (9)
000 = CPU Interrupt Priority Level is 0 (8)

Note 1: For complete register details, see **Register 3-1: "SR: CPU STATUS Register"**.
2: The IPL<2:0> bits are concatenated with the IPL<3> bit (CORCON<3>) to form the CPU Interrupt Priority Level. The value in parentheses indicates the IPL if IPL<3> = 1. User interrupts are disabled when IPL<3> = 1.
3: The IPL<2:0> Status bits are read-only when NSTDIS (INTCON1<15>) = 1.

REGISTER 7-2: CORCON: CORE CONTROL REGISTER(1)

U-0	U-0	U-0	R/W-0	R/W-0	R-0	R-0	R-0
—	—	—	US	EDT	DL<2:0>		
bit 15							bit 8

R/W-0	R/W-0	R/W-1	R/W-0	R/C-0	R/W-0	R/W-0	R/W-0
SATA	SATB	SATDW	ACCSAT	**IPL3(2)**	PSV	RND	IF
bit 7							bit 0

Legend:	C = Clear only bit		
R = Readable bit	W = Writable bit	-n = Value at POR	'1' = Bit is set
0' = Bit is cleared	'x = Bit is unknown	U = Unimplemented bit, read as '0'	

bit 3 **IPL3:** CPU Interrupt Priority Level Status bit 3(2)
1 = CPU interrupt priority level is greater than 7
0 = CPU interrupt priority level is 7 or less

Note 1: For complete register details, see **Register 3-2: "CORCON: CORE Control Register"**.
2: The IPL3 bit is concatenated with the IPL<2:0> bits (SR<7:5>) to form the CPU Interrupt Priority Level.

REGISTER 7-3: INTCON1: INTERRUPT CONTROL REGISTER 1

R/W-0	R/W-0	R/W-0	R/W-0	R/W-0	R/W-0	R/W-0	R/W-0
NSTDIS	OVAERR	OVBERR	COVAERR	COVBERR	OVATE	OVBTE	COVTE
bit 15							bit 8

R/W-0	R/W-0	U-0	R/W-0	R/W-0	R/W-0	R/W-0	U-0
SFTACERR	DIV0ERR	—	MATHERR	ADDRERR	STKERR	OSCFAIL	—
bit 7							bit 0

Legend:			
R = Readable bit	W = Writable bit	U = Unimplemented bit, read as '0'	
-n = Value at POR	'1' = Bit is set	'0' = Bit is cleared	x = Bit is unknown

bit 15 **NSTDIS:** Interrupt Nesting Disable bit
1 = Interrupt nesting is disabled
0 = Interrupt nesting is enabled

bit 14 **OVAERR:** Accumulator A Overflow Trap Flag bit
1 = Trap was caused by overflow of Accumulator A
0 = Trap was not caused by overflow of Accumulator A

bit 13 **OVBERR:** Accumulator B Overflow Trap Flag bit
1 = Trap was caused by overflow of Accumulator B
0 = Trap was not caused by overflow of Accumulator B

bit 12 **COVAERR:** Accumulator A Catastrophic Overflow Trap Flag bit
1 = Trap was caused by catastrophic overflow of Accumulator A
0 = Trap was not caused by catastrophic overflow of Accumulator A

bit 11 **COVBERR:** Accumulator B Catastrophic Overflow Trap Flag bit
1 = Trap was caused by catastrophic overflow of Accumulator B
0 = Trap was not caused by catastrophic overflow of Accumulator B

bit 10 **OVATE:** Accumulator A Overflow Trap Enable bit
1 = Trap overflow of Accumulator A
0 = Trap disabled

bit 9 **OVBTE:** Accumulator B Overflow Trap Enable bit
1 = Trap overflow of Accumulator B
0 = Trap disabled

bit 8 **COVTE:** Catastrophic Overflow Trap Enable bit
1 = Trap on catastrophic overflow of Accumulator A or B enabled
0 = Trap disabled

bit 7 **SFTACERR:** Shift Accumulator Error Status bit
1 = Math error trap was caused by an invalid accumulator shift
0 = Math error trap was not caused by an invalid accumulator shift

bit 6 **DIV0ERR:** Arithmetic Error Status bit
1 = Math error trap was caused by a divide by zero
0 = Math error trap was not caused by a divide by zero

bit 5 **Unimplemented:** Read as '0'

bit 4 **MATHERR:** Arithmetic Error Status bit
1 = Math error trap has occurred
0 = Math error trap has not occurred

bit 3 **ADDRERR:** Address Error Trap Status bit
1 = Address error trap has occurred
0 = Address error trap has not occurred

© 2007-2012 Microchip Technology Inc.

REGISTER 7-3: INTCON1: INTERRUPT CONTROL REGISTER 1 (CONTINUED)

bit 2 **STKERR:** Stack Error Trap Status bit
1 = Stack error trap has occurred
0 = Stack error trap has not occurred

bit 1 **OSCFAIL:** Oscillator Failure Trap Status bit
1 = Oscillator failure trap has occurred
0 = Oscillator failure trap has not occurred

bit 0 **Unimplemented:** Read as '0'

REGISTER 7-4: INTCON2: INTERRUPT CONTROL REGISTER 2

R/W-0	R-0	U-0	U-0	U-0	U-0	U-0	U-0
ALTIVT	DISI	—	—	—	—	—	—
bit 15							bit 8

U-0	U-0	U-0	U-0	U-0	R/W-0	R/W-0	R/W-0
—	—	—	—	—	INT2EP	INT1EP	INT0EP
bit 7							bit 0

Legend:			
R = Readable bit	W = Writable bit	U = Unimplemented bit, read as '0'	
-n = Value at POR	'1' = Bit is set	'0' = Bit is cleared	x = Bit is unknown

bit 15 **ALTIVT:** Enable Alternate Interrupt Vector Table bit
1 = Use alternate vector table
0 = Use standard (default) vector table

bit 14 **DISI:** DISI Instruction Status bit
1 = DISI instruction is active
0 = DISI instruction is not active

bit 13-3 **Unimplemented:** Read as '0'

bit 2 **INT2EP:** External Interrupt 2 Edge Detect Polarity Select bit
1 = Interrupt on negative edge
0 = Interrupt on positive edge

bit 1 **INT1EP:** External Interrupt 1 Edge Detect Polarity Select bit
1 = Interrupt on negative edge
0 = Interrupt on positive edge

bit 0 **INT0EP:** External Interrupt 0 Edge Detect Polarity Select bit
1 = Interrupt on negative edge
0 = Interrupt on positive edge

© 2007-2012 Microchip Technology Inc.

REGISTER 7-5: IFS0: INTERRUPT FLAG STATUS REGISTER 0

U-0	U-0	R/W-0	R/W-0	R/W-0	R/W-0	R/W-0	R/W-0
—	—	AD1IF	U1TXIF	U1RXIF	SPI1IF	SPI1EIF	T3IF
bit 15							bit 8

R/W-0	R/W-0	R/W-0	U-0	R/W-0	R/W-0	R/W-0	R/W-0
T2IF	OC2IF	IC2IF	—	T1IF	OC1IF	IC1IF	INT0IF
bit 7							bit 0

Legend:			
R = Readable bit	W = Writable bit	U = Unimplemented bit, read as '0'	
-n = Value at POR	'1' = Bit is set	'0' = Bit is cleared	x = Bit is unknown

bit 15-14 **Unimplemented:** Read as '0'

bit 13 **AD1IF:** ADC1 Conversion Complete Interrupt Flag Status bit
1 = Interrupt request has occurred
0 = Interrupt request has not occurred

bit 12 **U1TXIF:** UART1 Transmitter Interrupt Flag Status bit
1 = Interrupt request has occurred
0 = Interrupt request has not occurred

bit 11 **U1RXIF:** UART1 Receiver Interrupt Flag Status bit
1 = Interrupt request has occurred
0 = Interrupt request has not occurred

bit 10 **SPI1IF:** SPI1 Event Interrupt Flag Status bit
1 = Interrupt request has occurred
0 = Interrupt request has not occurred

bit 9 **SPI1EIF:** SPI1 Fault Interrupt Flag Status bit
1 = Interrupt request has occurred
0 = Interrupt request has not occurred

bit 8 **T3IF:** Timer3 Interrupt Flag Status bit
1 = Interrupt request has occurred
0 = Interrupt request has not occurred

bit 7 **T2IF:** Timer2 Interrupt Flag Status bit
1 = Interrupt request has occurred
0 = Interrupt request has not occurred

bit 6 **OC2IF:** Output Compare Channel 2 Interrupt Flag Status bit
1 = Interrupt request has occurred
0 = Interrupt request has not occurred

bit 5 **IC2IF:** Input Capture Channel 2 Interrupt Flag Status bit
1 = Interrupt request has occurred
0 = Interrupt request has not occurred

bit 4 **Unimplemented:** Read as '0'

bit 3 **T1IF:** Timer1 Interrupt Flag Status bit
1 = Interrupt request has occurred
0 = Interrupt request has not occurred

bit 2 **OC1IF:** Output Compare Channel 1 Interrupt Flag Status bit
1 = Interrupt request has occurred
0 = Interrupt request has not occurred

REGISTER 7-5: IFS0: INTERRUPT FLAG STATUS REGISTER 0 (CONTINUED)

bit 1 **IC1IF:** Input Capture Channel 1 Interrupt Flag Status bit
1 = Interrupt request has occurred
0 = Interrupt request has not occurred

bit 0 **INT0IF:** External Interrupt 0 Flag Status bit
1 = Interrupt request has occurred
0 = Interrupt request has not occurred

© 2007-2012 Microchip Technology Inc.

REGISTER 7-6: IFS1: INTERRUPT FLAG STATUS REGISTER 1

U-0	U-0	R/W-0	U-0	U-0	U-0	U-0	U-0
—	—	INT2IF	—	—	—	—	—
bit 15							bit 8

R/W-0	R/W-0	U-0	R/W-0	R/W-0	U-0	R/W-0	R/W-0
IC8IF	IC7IF	—	INT1IF	CNIF	—	MI2C1IF	SI2C1IF
bit 7							bit 0

Legend:			
R = Readable bit	W = Writable bit	U = Unimplemented bit, read as '0'	
-n = Value at POR	'1' = Bit is set	'0' = Bit is cleared	x = Bit is unknown

bit 15-14 **Unimplemented:** Read as '0'

bit 13 **INT2IF:** External Interrupt 2 Flag Status bit
1 = Interrupt request has occurred
0 = Interrupt request has not occurred

bit 12-8 **Unimplemented:** Read as '0'

bit 7 **IC8IF:** Input Capture Channel 8 Interrupt Flag Status bit
1 = Interrupt request has occurred
0 = Interrupt request has not occurred

bit 6 **IC7IF:** Input Capture Channel 7 Interrupt Flag Status bit
1 = Interrupt request has occurred
0 = Interrupt request has not occurred

bit 5 **Unimplemented:** Read as '0'

bit 4 **INT1IF:** External Interrupt 1 Flag Status bit
1 = Interrupt request has occurred
0 = Interrupt request has not occurred

bit 3 **CNIF:** Input Change Notification Interrupt Flag Status bit
1 = Interrupt request has occurred
0 = Interrupt request has not occurred

bit 2 **Unimplemented:** Read as '0'

bit 1 **MI2C1IF:** I2C1 Master Events Interrupt Flag Status bit
1 = Interrupt request has occurred
0 = Interrupt request has not occurred

bit 0 **SI2C1IF:** I2C1 Slave Events Interrupt Flag Status bit
1 = Interrupt request has occurred
0 = Interrupt request has not occurred

REGISTER 7-7: IFS3: INTERRUPT FLAG STATUS REGISTER 3

R/W-0	U-0	U-0	U-0	U-0	R/W-0	R/W-0	U-0
FLTA1IF	—	—	—	—	QEIIF	PWM1IF	—
bit 15							bit 8

U-0	U-0	U-0	U-0	U-0	U-0	U-0	U-0
—	—	—	—	—	—	—	—
bit 7							bit 0

Legend:			
R = Readable bit	W = Writable bit	U = Unimplemented bit, read as '0'	
-n = Value at POR	'1' = Bit is set	'0' = Bit is cleared	x = Bit is unknown

bit 15 **FLTA1IF:** PWM1 Fault A Interrupt Flag Status bit
1 = Interrupt request has occurred
0 = Interrupt request has not occurred

bit 14-11 **Unimplemented:** Read as '0'

bit 10 **QEIIF:** QEI Event Interrupt Flag Status bit
1 = Interrupt request has occurred
0 = Interrupt request has not occurred

bit 9 **PWM1IF:** PWM1 Interrupt Flag Status bit
1 = Interrupt request has occurred
0 = Interrupt request has not occurred

bit 8-0 **Unimplemented:** Read as '0'

© 2007-2012 Microchip Technology Inc.

REGISTER 7-8: IFS4: INTERRUPT FLAG STATUS REGISTER 4

U-0	U-0	U-0	U-0	U-0	R/W-0	R/W-0	U-0
—	—	—	—	—	FLTA2IF	PWM2IF	—
bit 15							bit 8

U-0	U-0	U-0	U-0	U-0	U-0	R/W-0	U-0
—	—	—	—	—	—	U1EIF	—
bit 7							bit 0

Legend:			
R = Readable bit	W = Writable bit	U = Unimplemented bit, read as '0'	
-n = Value at POR	'1' = Bit is set	'0' = Bit is cleared	x = Bit is unknown

bit 15-11 **Unimplemented:** Read as '0'

bit 10 **FLTA2IF:** PWM2 Fault A Interrupt Flag Status bit
1 = Interrupt request has occurred
0 = Interrupt request has not occurred

bit 9 **PWM2IF:** PWM2 Error Interrupt Enable bit
1 = Interrupt request has occurred
0 = Interrupt request has not occurred

bit 8-2 **Unimplemented:** Read as '0'

bit 1 **U1EIF:** UART1 Interrupt Flag Status bit
1 = Interrupt request has occurred
0 = Interrupt request has not occurred

bit 0 **Unimplemented:** Read as '0'

REGISTER 7-9: IEC0: INTERRUPT ENABLE CONTROL REGISTER 0

U-0	U-0	R/W-0	R/W-0	R/W-0	R/W-0	R/W-0	R/W-0
—	—	AD1IE	U1TXIE	U1RXIE	SPI1IE	SPI1EIE	T3IE
bit 15							bit 8

R/W-0	R/W-0	R/W-0	U-0	R/W-0	R/W-0	R/W-0	R/W-0
T2IE	OC2IE	IC2IE	—	T1IE	OC1IE	IC1IE	INT0IE
bit 7							bit 0

Legend:			
R = Readable bit	W = Writable bit	U = Unimplemented bit, read as '0'	
-n = Value at POR	'1' = Bit is set	'0' = Bit is cleared	x = Bit is unknown

bit 15-14 **Unimplemented:** Read as '0'

bit 13 **AD1IE:** ADC1 Conversion Complete Interrupt Enable bit
1 = Interrupt request enabled
0 = Interrupt request not enabled

bit 12 **U1TXIE:** UART1 Transmitter Interrupt Enable bit
1 = Interrupt request enabled
0 = Interrupt request not enabled

bit 11 **U1RXIE:** UART1 Receiver Interrupt Enable bit
1 = Interrupt request enabled
0 = Interrupt request not enabled

bit 10 **SPI1IE:** SPI1 Event Interrupt Enable bit
1 = Interrupt request enabled
0 = Interrupt request not enabled

bit 9 **SPI1EIE:** SPI1 Event Interrupt Enable bit
1 = Interrupt request enabled
0 = Interrupt request not enabled

bit 8 **T3IE:** Timer3 Interrupt Enable bit
1 = Interrupt request enabled
0 = Interrupt request not enabled

bit 7 **T2IE:** Timer2 Interrupt Enable bit
1 = Interrupt request enabled
0 = Interrupt request not enabled

bit 6 **OC2IE:** Output Compare Channel 2 Interrupt Enable bit
1 = Interrupt request enabled
0 = Interrupt request not enabled

bit 5 **IC2IE:** Input Capture Channel 2 Interrupt Enable bit
1 = Interrupt request enabled
0 = Interrupt request not enabled

bit 4 **Unimplemented:** Read as '0'

bit 3 **T1IE:** Timer1 Interrupt Enable bit
1 = Interrupt request enabled
0 = Interrupt request not enabled

bit 2 **OC1IE:** Output Compare Channel 1 Interrupt Enable bit
1 = Interrupt request enabled
0 = Interrupt request not enabled

© 2007-2012 Microchip Technology Inc.

REGISTER 7-9: IEC0: INTERRUPT ENABLE CONTROL REGISTER 0 (CONTINUED)

bit 1 **IC1IE:** Input Capture Channel 1 Interrupt Enable bit
1 = Interrupt request enabled
0 = Interrupt request not enabled

bit 0 **INT0IE:** External Interrupt 0 Enable bit
1 = Interrupt request enabled
0 = Interrupt request not enabled

REGISTER 7-10: IEC1: INTERRUPT ENABLE CONTROL REGISTER 1

U-0	U-0	R/W-0	U-0	U-0	U-0	U-0	U-0
—	—	INT2IE	—	—	—	—	—
bit 15							bit 8

R/W-0	R/W-0	U-0	R/W-0	R/W-0	U-0	R/W-0	R/W-0
IC8IE	IC7IE	—	INT1IE	CNIE	—	MI2C1IE	SI2C1IE
bit 7							bit 0

Legend:			
R = Readable bit	W = Writable bit	U = Unimplemented bit, read as '0'	
-n = Value at POR	'1' = Bit is set	'0' = Bit is cleared	x = Bit is unknown

bit 15-14 **Unimplemented:** Read as '0'

bit 13 **INT2IE:** External Interrupt 2 Enable bit
1 = Interrupt request enabled
0 = Interrupt request not enabled

bit 12-8 **Unimplemented:** Read as '0'

bit 7 **IC8IE:** Input Capture Channel 8 Interrupt Enable bit
1 = Interrupt request enabled
0 = Interrupt request not enabled

bit 6 **IC7IE:** Input Capture Channel 7 Interrupt Enable bit
1 = Interrupt request enabled
0 = Interrupt request not enabled

bit 5 **Unimplemented:** Read as '0'

bit 4 **INT1IE:** External Interrupt 1 Enable bit
1 = Interrupt request enabled
0 = Interrupt request not enabled

bit 3 **CNIE:** Input Change Notification Interrupt Enable bit
1 = Interrupt request enabled
0 = Interrupt request not enabled

bit 2 **Unimplemented:** Read as '0'

bit 1 **MI2C1IE:** I2C1 Master Events Interrupt Enable bit
1 = Interrupt request enabled
0 = Interrupt request not enabled

bit 0 **SI2C1IE:** I2C1 Slave Events Interrupt Enable bit
1 = Interrupt request enabled
0 = Interrupt request not enabled

© 2007-2012 Microchip Technology Inc.

REGISTER 7-11: IEC3: INTERRUPT ENABLE CONTROL REGISTER 3

R/W-0	U-0	U-0	U-0	U-0	R/W-0	R/W-0	U-0
FLTA1IE	—	—	—	—	QEIIE	PWM1IE	—
bit 15							bit 8

U-0	U-0	U-0	U-0	U-0	U-0	U-0	U-0
—	—	—	—	—	—	—	—
bit 7							bit 0

Legend:			
R = Readable bit	W = Writable bit	U = Unimplemented bit, read as '0'	
-n = Value at POR	'1' = Bit is set	'0' = Bit is cleared	x = Bit is unknown

bit 15 **FLTA1IE:** PWM1 Fault A Interrupt Enable bit
1 = Interrupt request enabled
0 = Interrupt request not enabled

bit 14-11 **Unimplemented:** Read as '0'

bit 10 **QEIIE:** QEI Event Interrupt Enable bit
1 = Interrupt request enabled
0 = Interrupt request not enabled

bit 9 **PWM1IE:** PWM1 Error Interrupt Enable bit
1 = Interrupt request enabled
0 = Interrupt request not enabled

bit 8-0 **Unimplemented:** Read as '0'

REGISTER 7-12: IEC4: INTERRUPT ENABLE CONTROL REGISTER 4

U-0	U-0	U-0	U-0	U-0	R/W-0	R/W-0	U-0
—	—	—	—	—	FLA2IE	PWM2IE	—
bit 15							bit 8

U-0	U-0	U-0	U-0	U-0	U-0	R/W-0	U-0
—	—	—	—	—	—	U1EIE	—
bit 7							bit 0

Legend:			
R = Readable bit	W = Writable bit	U = Unimplemented bit, read as '0'	
-n = Value at POR	'1' = Bit is set	'0' = Bit is cleared	x = Bit is unknown

bit 15-11 **Unimplemented:** Read as '0'

bit 10 **FLA2IE:** PWM2 Fault A Interrupt Enable bit
1 = Interrupt request enabled
0 = Interrupt request not enabled

bit 9 **PWM2IE:** PWM2 Error Interrupt Enable bit
1 = Interrupt request enabled
0 = Interrupt request not enabled

bit 8-2 **Unimplemented:** Read as '0'

bit 1 **U1EIE:** UART1 Error Interrupt Enable bit
1 = Interrupt request enabled
0 = Interrupt request not enabled

bit 0 **Unimplemented:** Read as '0'

© 2007-2012 Microchip Technology Inc.

REGISTER 7-13: IPC0: INTERRUPT PRIORITY CONTROL REGISTER 0

U-0	R/W-1	R/W-0	R/W-0	U-0	R/W-1	R/W-0	R/W-0
—	T1IP<2:0>			—	OC1IP<2:0>		
bit 15							bit 8

U-0	R/W-1	R/W-0	R/W-0	U-0	R/W-1	R/W-0	R/W-0
—	IC1IP<2:0>			—	INT0IP<2:0>		
bit 7							bit 0

Legend:			
R = Readable bit	W = Writable bit	U = Unimplemented bit, read as '0'	
-n = Value at POR	'1' = Bit is set	'0' = Bit is cleared	x = Bit is unknown

bit 15 **Unimplemented:** Read as '0'

bit 14-12 **T1IP<2:0>:** Timer1 Interrupt Priority bits
111 = Interrupt is priority 7 (highest priority interrupt)
•
•
•
001 = Interrupt is priority 1
000 = Interrupt source is disabled

bit 11 **Unimplemented:** Read as '0'

bit 10-8 **OC1IP<2:0>:** Output Compare Channel 1 Interrupt Priority bits
111 = Interrupt is priority 7 (highest priority interrupt)
•
•
•
001 = Interrupt is priority 1
000 = Interrupt source is disabled

bit 7 **Unimplemented:** Read as '0'

bit 6-4 **IC1IP<2:0>:** Input Capture Channel 1 Interrupt Priority bits
111 = Interrupt is priority 7 (highest priority interrupt)
•
•
•
001 = Interrupt is priority 1
000 = Interrupt source is disabled

bit 3 **Unimplemented:** Read as '0'

bit 2-0 **INT0IP<2:0>:** External Interrupt 0 Priority bits
111 = Interrupt is priority 7 (highest priority interrupt)
•
•
•
001 = Interrupt is priority 1
000 = Interrupt source is disabled

REGISTER 7-14: IPC1: INTERRUPT PRIORITY CONTROL REGISTER 1

U-0	R/W-1	R/W-0	R/W-0	U-0	R/W-1	R/W-0	R/W-0
—	T2IP<2:0>			—	OC2IP<2:0>		
bit 15							bit 8

U-0	R/W-1	R/W-0	R/W-0	U-0	U-0	U-0	U-0
—	IC2IP<2:0>			—	—	—	—
bit 7							bit 0

Legend:			
R = Readable bit	W = Writable bit	U = Unimplemented bit, read as '0'	
-n = Value at POR	'1' = Bit is set	'0' = Bit is cleared	x = Bit is unknown

bit 15 **Unimplemented:** Read as '0'

bit 14-12 **T2IP<2:0>:** Timer2 Interrupt Priority bits
111 = Interrupt is priority 7 (highest priority interrupt)
•
•
•
001 = Interrupt is priority 1
000 = Interrupt source is disabled

bit 11 **Unimplemented:** Read as '0'

bit 10-8 **OC2IP<2:0>:** Output Compare Channel 2 Interrupt Priority bits
111 = Interrupt is priority 7 (highest priority interrupt)
•
•
•
001 = Interrupt is priority 1
000 = Interrupt source is disabled

bit 7 **Unimplemented:** Read as '0'

bit 6-4 **IC2IP<2:0>:** Input Capture Channel 2 Interrupt Priority bits
111 = Interrupt is priority 7 (highest priority interrupt)
•
•
•
001 = Interrupt is priority 1
000 = Interrupt source is disabled

bit 3-0 **Unimplemented:** Read as '0'

© 2007-2012 Microchip Technology Inc.

REGISTER 7-15: IPC2: INTERRUPT PRIORITY CONTROL REGISTER 2

U-0	R/W-1	R/W-0	R/W-0	U-0	R/W-1	R/W-0	R/W-0
—	U1RXIP<2:0>			—	SPI1IP<2:0>		
bit 15							bit 8

U-0	R/W-1	R/W-0	R/W-0	U-0	R/W-1	R/W-0	R/W-0
—	SPI1EIP<2:0>			—	T3IP<2:0>		
bit 7							bit 0

Legend:			
R = Readable bit	W = Writable bit	U = Unimplemented bit, read as '0'	
-n = Value at POR	'1' = Bit is set	'0' = Bit is cleared	x = Bit is unknown

bit 15 **Unimplemented:** Read as '0'

bit 14-12 **U1RXIP<2:0>:** UART1 Receiver Interrupt Priority bits
111 = Interrupt is priority 7 (highest priority interrupt)
•
•
•
001 = Interrupt is priority 1
000 = Interrupt source is disabled

bit 11 **Unimplemented:** Read as '0'

bit 10-8 **SPI1IP<2:0>:** SPI1 Event Interrupt Priority bits
111 = Interrupt is priority 7 (highest priority interrupt)
•
•
•
001 = Interrupt is priority 1
000 = Interrupt source is disabled

bit 7 **Unimplemented:** Read as '0'

bit 6-4 **SPI1EIP<2:0>:** SPI1 Error Interrupt Priority bits
111 = Interrupt is priority 7 (highest priority interrupt)
•
•
•
001 = Interrupt is priority 1
000 = Interrupt source is disabled

bit 3 **Unimplemented:** Read as '0'

bit 2-0 **T3IP<2:0>:** Timer3 Interrupt Priority bits
111 = Interrupt is priority 7 (highest priority interrupt)
•
•
•
001 = Interrupt is priority 1
000 = Interrupt source is disabled

REGISTER 7-16: IPC3: INTERRUPT PRIORITY CONTROL REGISTER 3

U-0	U-0	U-0	U-0	U-0	U-0	U-0	U-0
—	—	—	—	—	—	—	—
bit 15							bit 8

U-0	R/W-1	R/W-0	R/W-0	U-0	R/W-1	R/W-0	R/W-0
—	AD1IP<2:0>			—	U1TXIP<2:0>		
bit 7							bit 0

Legend:			
R = Readable bit	W = Writable bit	U = Unimplemented bit, read as '0'	
-n = Value at POR	'1' = Bit is set	'0' = Bit is cleared	x = Bit is unknown

bit 15-7 **Unimplemented:** Read as '0'

bit 6-4 **AD1IP<2:0>:** ADC1 Conversion Complete Interrupt Priority bits
111 = Interrupt is priority 7 (highest priority interrupt)
•
•
•
001 = Interrupt is priority 1
000 = Interrupt source is disabled

bit 3 **Unimplemented:** Read as '0'

bit 2-0 **U1TXIP<2:0>:** UART1 Transmitter Interrupt Priority bits
111 = Interrupt is priority 7 (highest priority interrupt)
•
•
•
001 = Interrupt is priority 1
000 = Interrupt source is disabled

© 2007-2012 Microchip Technology Inc.

REGISTER 7-17: IPC4: INTERRUPT PRIORITY CONTROL REGISTER 4

U-0	R/W-1	R/W-0	R/W-0	U-0	U-0	U-0	U-0
—	CNIP<2:0>			—	—	—	—
bit 15							bit 8

U-0	R/W-1	R/W-0	R/W-0	U-0	R/W-1	R/W-0	R/W-0
—	MI2C1IP<2:0>			—	SI2C1IP<2:0>		
bit 7							bit 0

Legend:			
R = Readable bit	W = Writable bit	U = Unimplemented bit, read as '0'	
-n = Value at POR	'1' = Bit is set	'0' = Bit is cleared	x = Bit is unknown

bit 15 **Unimplemented:** Read as '0'

bit 14-12 **CNIP<2:0>:** Change Notification Interrupt Priority bits
111 = Interrupt is priority 7 (highest priority interrupt)
•
•
•
001 = Interrupt is priority 1
000 = Interrupt source is disabled

bit 11-7 **Unimplemented:** Read as '0'

bit 6-4 **MI2C1IP<2:0>:** I2C1 Master Events Interrupt Priority bits
111 = Interrupt is priority 7 (highest priority interrupt)
•
•
•
001 = Interrupt is priority 1
000 = Interrupt source is disabled

bit 3 **Unimplemented:** Read as '0'

bit 2-0 **SI2C1IP<2:0>:** I2C1 Slave Events Interrupt Priority bits
111 = Interrupt is priority 7 (highest priority interrupt)
•
•
•
001 = Interrupt is priority 1
000 = Interrupt source is disabled

REGISTER 7-18: IPC5: INTERRUPT PRIORITY CONTROL REGISTER 5

U-0	R/W-1	R/W-0	R/W-0	U-0	R/W-1	R/W-0	R/W-0
—	IC8IP<2:0>			—	IC7IP<2:0>		
bit 15							bit 8

U-0	U-0	U-0	U-0	U-0	R/W-1	R/W-0	R/W-0
—	—	—	—	—	INT1IP<2:0>		
bit 7							bit 0

Legend:			
R = Readable bit	W = Writable bit	U = Unimplemented bit, read as '0'	
-n = Value at POR	'1' = Bit is set	'0' = Bit is cleared	x = Bit is unknown

bit 15 **Unimplemented:** Read as '0'

bit 14-12 **IC8IP<2:0>:** Input Capture Channel 8 Interrupt Priority bits
111 = Interrupt is priority 7 (highest priority interrupt)
•
•
•
001 = Interrupt is priority 1
000 = Interrupt source is disabled

bit 11 **Unimplemented:** Read as '0'

bit 10-8 **IC7IP<2:0>:** Input Capture Channel 7 Interrupt Priority bits
111 = Interrupt is priority 7 (highest priority interrupt)
•
•
•
001 = Interrupt is priority 1
000 = Interrupt source is disabled

bit 7-3 **Unimplemented:** Read as '0'

bit 2-0 **INT1IP<2:0>:** External Interrupt 1 Priority bits
111 = Interrupt is priority 7 (highest priority interrupt)
•
•
•
001 = Interrupt is priority 1
000 = Interrupt source is disabled

© 2007-2012 Microchip Technology Inc.

REGISTER 7-19: IPC7: INTERRUPT PRIORITY CONTROL REGISTER 7

U-0	U-0	U-0	U-0	U-0	U-0	U-0	U-0
—	—	—	—	—	—	—	—
bit 15							bit 8

U-0	R/W-1	R/W-0	R/W-0	U-0	U-0	U-0	U-0
—	INT2IP<2:0>			—	—	—	—
bit 7							bit 0

Legend:			
R = Readable bit	W = Writable bit	U = Unimplemented bit, read as '0'	
-n = Value at POR	'1' = Bit is set	'0' = Bit is cleared	x = Bit is unknown

bit 15-7 **Unimplemented:** Read as '0'

bit 6-4 **INT2IP<2:0>:** External Interrupt 2 Priority bits
111 = Interrupt is priority 7 (highest priority interrupt)
•
•
•
001 = Interrupt is priority 1
000 = Interrupt source is disabled

bit 3-0 **Unimplemented:** Read as '0'

REGISTER 7-20: IPC14: INTERRUPT PRIORITY CONTROL REGISTER 14

U-0	U-0	U-0	U-0	U-0	R/W-1	R/W-0	R/W-0
—	—	—	—	—	QEIIP<2:0>		
bit 15							bit 8

U-0	R/W-1	R/W-0	R/W-0	U-0	U-0	U-0	U-0
—	PWM1IP<2:0>			—	—	—	—
bit 7							bit 0

Legend:			
R = Readable bit	W = Writable bit	U = Unimplemented bit, read as '0'	
-n = Value at POR	'1' = Bit is set	'0' = Bit is cleared	x = Bit is unknown

bit 15-12 **Unimplemented:** Read as '0'

bit 10-8 **QEIIP<2:0>:** QEI Interrupt Priority bits
111 = Interrupt is priority 7 (highest priority interrupt)
•
•
•
001 = Interrupt is priority 1
000 = Interrupt source is disabled

bit 7 **Unimplemented:** Read as '0'

bit 6-4 **PWM1IP<2:0>:** PWM1 Interrupt Priority bits
111 = Interrupt is priority 7 (highest priority interrupt)
•
•
•
001 = Interrupt is priority 1
000 = Interrupt source is disabled

bit 3-0 **Unimplemented:** Read as '0'

© 2007-2012 Microchip Technology Inc.

REGISTER 7-21: IPC15: INTERRUPT PRIORITY CONTROL REGISTER 15

U-0	R/W-1	R/W-0	R/W-0	U-0	U-0	U-0	U-0
—	FLTA1IP<2:0>			—	—	—	—
bit 15							bit 8

U-0	U-0	U-0	U-0	U-0	U-0	U-0	U-0
—	—	—	—	—	—	—	—
bit 7							bit 0

Legend:			
R = Readable bit	W = Writable bit	U = Unimplemented bit, read as '0'	
-n = Value at POR	'1' = Bit is set	'0' = Bit is cleared	x = Bit is unknown

bit 15 **Unimplemented:** Read as '0'

bit 14-12 **FLTA1IP<2:0>:** PWM1 Fault A Interrupt Priority bits
111 = Interrupt is priority 7 (highest priority interrupt)
•
•
•
001 = Interrupt is priority 1
000 = Interrupt source is disabled

bit 11-0 **Unimplemented:** Read as '0'

REGISTER 7-22: IPC16: INTERRUPT PRIORITY CONTROL REGISTER 16

U-0	U-0	U-0	U-0	U-0	U-0	U-0	U-0
—	—	—	—	—	—	—	—
bit 15							bit 8

U-0	R/W-1	R/W-0	R/W-0	U-0	U-0	U-0	U-0
—	U1EIP<2:0>			—	—	—	—
bit 7							bit 0

Legend:			
R = Readable bit	W = Writable bit	U = Unimplemented bit, read as '0'	
-n = Value at POR	'1' = Bit is set	'0' = Bit is cleared	x = Bit is unknown

bit 15-7 **Unimplemented:** Read as '0'

bit 6-4 **U1EIP<2:0>:** UART1 Error Interrupt Priority bits
111 = Interrupt is priority 7 (highest priority interrupt)
•
•
•
001 = Interrupt is priority 1
000 = Interrupt source is disabled

bit 3-0 **Unimplemented:** Read as '0'

REGISTER 7-23: IPC18: INTERRUPT PRIORITY CONTROL REGISTER 18

U-0	U-0	U-0	U-0	U-0	R/W-0	R/W-0	R/W-0
—	—	—	—	—	FLTA2IP<2:0>		
bit 15							bit 8

U-0	R/W-1	R/W-0	R/W-0	U-0	U-0	U-0	U-0
—	PWM2IP<2:0>			—	—	—	—
bit 7							bit 0

Legend:			
R = Readable bit	W = Writable bit	U = Unimplemented bit, read as '0'	
-n = Value at POR	'1' = Bit is set	'0' = Bit is cleared	x = Bit is unknown

bit 15-11 **Unimplemented:** Read as '0'

bit 8-10 **FLTA2IP<2:0>:** PWM2 Fault A Interrupt Priority bits
111 = Interrupt is priority 7 (highest priority interrupt)
•
•
•
001 = Interrupt is priority 1
000 = Interrupt source is disabled

bit 7 **Unimplemented:** Read as '0'

bit 6-4 **PWM2IP<2:0>:** PWM2 Interrupt Priority bits
111 = Interrupt is priority 7 (highest priority interrupt)
•
•
•
001 = Interrupt is priority 1
000 = Interrupt source is disabled

bit 3-0 **Unimplemented:** Read as '0'

© 2007-2012 Microchip Technology Inc.

REGISTER 7-24: INTTREG: INTERRUPT CONTROL AND STATUS REGISTER

U-0	U-0	U-0	U-0	R-0	R-0	R-0	R-0
—	—	—	—	ILR<3:0>			
bit 15							bit 8

U-0	R-0	R-0	R-0	R-0	R-0	R-0	R-0
—	VECNUM<6:0>						
bit 7							bit 0

Legend:			
R = Readable bit	W = Writable bit	U = Unimplemented bit, read as '0'	
-n = Value at POR	'1' = Bit is set	'0' = Bit is cleared	x = Bit is unknown

bit 15-12 **Unimplemented:** Read as '0'

bit 11-8 **ILR<3:0>:** New CPU Interrupt Priority Level bits
1111 = CPU Interrupt Priority Level is 15
•
•
•
0001 = CPU Interrupt Priority Level is 1
0000 = CPU Interrupt Priority Level is 0

bit 7 **Unimplemented:** Read as '0'

bit 6-0 **VECNUM<6:0>:** Vector Number of Pending Interrupt bits
0111111 = Interrupt Vector pending is number 135
•
•
•
0000001 = Interrupt Vector pending is number 9
0000000 = Interrupt Vector pending is number 8

7.5 Interrupt Setup Procedures

7.5.1 INITIALIZATION

To configure an interrupt source at initialization:

1. Set the NSTDIS bit (INTCON1<15>) if nested interrupts are not desired.
2. Select the user-assigned priority level for the interrupt source by writing the control bits in the appropriate IPCx register. The priority level will depend on the specific application and type of interrupt source. If multiple priority levels are not desired, the IPCx register control bits for all enabled interrupt sources can be programmed to the same non-zero value.

Note:	At a device Reset, the IPCx registers are initialized such that all user interrupt sources are assigned to priority level 4.

3. Clear the interrupt flag status bit associated with the peripheral in the associated IFSx register.
4. Enable the interrupt source by setting the interrupt enable control bit associated with the source in the appropriate IECx register.

7.5.2 INTERRUPT SERVICE ROUTINE

The method used to declare an Interrupt Service Routine (ISR) and initialize the IVT with the correct vector address depends on the programming language (C or assembler) and the language development tool suite used to develop the application.

In general, the user application must clear the interrupt flag in the appropriate IFSx register for the source of interrupt that the ISR handles. Otherwise, program will re-enter the ISR immediately after exiting the routine. If the ISR is coded in assembly language, it must be terminated using a `RETFIE` instruction to unstack the saved PC value, SRL value and old CPU priority level.

7.5.3 TRAP SERVICE ROUTINE

A Trap Service Routine (TSR) is coded like an ISR, except that the appropriate trap status flag in the INTCON1 register must be cleared to avoid re-entry into the TSR.

7.5.4 INTERRUPT DISABLE

All user interrupts can be disabled using this procedure:

1. Push the current SR value onto the software stack using the `PUSH` instruction.
2. Force the CPU to priority level 7 by inclusive ORing the value OEh with SRL.

To enable user interrupts, the `POP` instruction can be used to restore the previous SR value.

Note:	Only user interrupts with a priority level of 7 or lower can be disabled. Trap sources (level 8-level 15) cannot be disabled.

The `DISI` instruction provides a convenient way to disable interrupts of priority levels 1-6 for a fixed period of time. Level 7 interrupt sources are not disabled by the `DISI` instruction.

© 2007-2012 Microchip Technology Inc.

8.0 OSCILLATOR CONFIGURATION

Note 1: This data sheet summarizes the features of the dsPIC33FJ32MC202/204 and dsPIC33FJ16MC304 devices. It is not intended to be a comprehensive reference source. To complement the information in this data sheet, refer to **Section 7. "Oscillator"** (DS70186) of the *dsPIC33F/PIC24H Family Reference Manual"*, which is available from the Microchip web site (www.microchip.com).

2: Some registers and associated bits described in this section may not be available on all devices. Refer to **Section 4.0 "Memory Organization"** in this data sheet for device-specific register and bit information.

The oscillator system for dsPIC33FJ32MC202/204 and dsPIC33FJ16MC304 devices provides:

- External and internal oscillator options as clock sources.
- An on-chip Phase-Locked Loop (PLL) to scale the internal operating frequency to the required system clock frequency.
- An internal FRC oscillator that can also be used with the PLL, thereby allowing full-speed operation without any external clock generation hardware.
- Clock switching between various clock sources.
- Programmable clock postscaler for system power savings.
- A Fail-Safe Clock Monitor (FSCM) that detects clock failure and takes fail-safe measures.
- A Clock Control register (OSCCON).
- Nonvolatile Configuration bits for main oscillator selection.

A simplified diagram of the oscillator system is shown in Figure 8-1.

FIGURE 8-1: dsPIC33FJ32MC202/204 and dsPIC33FJ16MC304 OSCILLATOR SYSTEM DIAGRAM

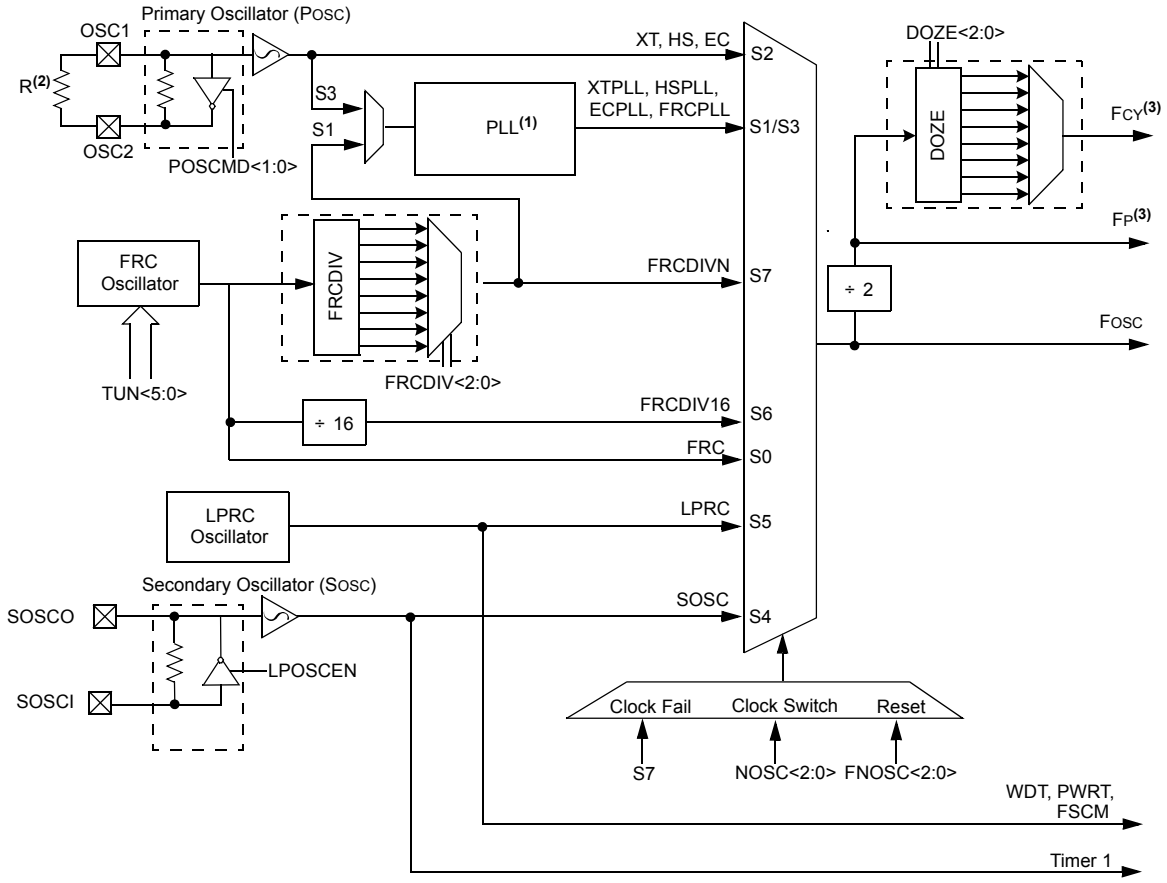

Note 1: See Figure 8-2 for PLL details.

2: If the Oscillator is used with XT or HS modes, an external parallel resistor with the value of 1 MΩ must be connected.

3: The term FP refers to the clock source for all of the peripherals, while FCY refers to the clock source for the CPU. Throughout this document, FCY and FP are used interchangeably, except in the case of DOZE mode. FP and FCY will be different when DOZE mode is used with any ratio other than 1:1 which is the default.

8.1 CPU Clocking System

The dsPIC33FJ32MC202/204 and dsPIC33FJ16MC304 devices provide seven system clock options:

- Fast RC (FRC) Oscillator
- FRC Oscillator with PLL
- Primary (XT, HS or EC) Oscillator
- Primary Oscillator with PLL
- Secondary (LP) Oscillator
- Low-Power RC (LPRC) Oscillator
- FRC Oscillator with postscaler

8.1.1 SYSTEM CLOCK SOURCES

8.1.1.1 Fast RC

The Fast RC (FRC) internal oscillator runs at a nominal frequency of 7.37 MHz. User software can tune the FRC frequency. User software can optionally specify a factor (ranging from 1:2 to 1:256) by which the FRC clock frequency is divided. This factor is selected using the FRCDIV<2:0> bits (CLKDIV<10:8>).

8.1.1.2 Primary

The primary oscillator can use one of the following as its clock source:

- XT (Crystal): Crystals and ceramic resonators in the range of 3 MHz to 10 MHz. The crystal is connected to the OSC1 and OSC2 pins.
- HS (High-Speed Crystal): Crystals in the range of 10 MHz to 40 MHz. The crystal is connected to the OSC1 and OSC2 pins.
- EC (External Clock): The external clock signal is directly applied to the OSC1 pin.

8.1.1.3 Secondary

The secondary (LP) oscillator is designed for low power and uses a 32.768 kHz crystal or ceramic resonator. The LP oscillator uses the SOSCI and SOSCO pins.

8.1.1.4 Low-Power RC

The LPRC (Low-Power RC) internal oscIllator runs at a nominal frequency of 32.768 kHz. It is also used as a reference clock by the Watchdog Timer (WDT) and Fail-Safe Clock Monitor (FSCM).

8.1.1.5 FRC

The clock signals generated by the FRC and primary oscillators can be optionally applied to an on-chip Phase Locked Loop (PLL) to provide a wide range of output frequencies for device operation. PLL configuration is described in **Section 8.1.3 "PLL Configuration"**.

The FRC frequency depends on the FRC accuracy (see Table 24-18) and the value of the FRC Oscillator Tuning register (see Register 8-4).

8.1.2 SYSTEM CLOCK SELECTION

The oscillator source used at a device Power-on Reset event is selected using Configuration bit settings. The oscillator Configuration bit settings are located in the Configuration registers in the program memory. (Refer to **Section 21.1 "Configuration Bits"** for further details.) The Initial Oscillator Selection Configuration bits, FNOSC<2:0> (FOSCSEL<2:0>), and the Primary Oscillator Mode Select Configuration bits, POSCMD<1:0> (FOSC<1:0>), select the oscillator source that is used at a Power-on Reset. The FRC primary oscillator is the default (unprogrammed) selection.

The Configuration bits allow users to choose among 12 different clock modes, shown in Table 8-1.

The output of the oscillator (or the output of the PLL if a PLL mode has been selected) FOSC is divided by 2 to generate the device instruction clock (FCY) and the peripheral clock time base (FP). FCY defines the operating speed of the device, and speeds up to 40 MHz are supported by the dsPIC33FJ32MC202/204 and dsPIC33FJ16MC304 architecture.

Instruction execution speed or device operating frequency, FCY, is given by:

EQUATION 8-1: DEVICE OPERATING FREQUENCY

$$FCY = \frac{FOSC}{2}$$

8.1.3 PLL CONFIGURATION

The primary oscillator and internal FRC oscillator can optionally use an on-chip PLL to obtain higher speeds of operation. The PLL provides significant flexibility in selecting the device operating speed. A block diagram of the PLL is shown in Figure 8-2.

The output of the primary oscillator or FRC, denoted as 'FIN', is divided down by a prescale factor (N1) of 2, 3, ... or 33 before being provided to the PLL's Voltage Controlled Oscillator (VCO). The input to the VCO must be selected in the range of 0.8 MHz to 8 MHz. The prescale factor 'N1' is selected using the PLLPRE<4:0> bits (CLKDIV<4:0>).

The PLL Feedback Divisor, selected using the PLLDIV<8:0> bits (PLLFBD<8:0>), provides a factor 'M', by which the input to the VCO is multiplied. This factor must be selected such that the resulting VCO output frequency is in the range of 100 MHz to 200 MHz.

The VCO output is further divided by a postscale factor 'N2.' This factor is selected using the PLLPOST<1:0> bits (CLKDIV<7:6>). 'N2' can be either 2, 4 or 8, and must be selected such that the PLL output frequency (FOSC) is in the range of 12.5 MHz to 80 MHz, which generates device operating speeds of 6.25-40 MIPS.

© 2007-2012 Microchip Technology Inc.

For a primary oscillator or FRC oscillator, output 'FIN', the PLL output 'FOSC' is given by:

EQUATION 8-2: FOSC CALCULATION

$$FOSC = FIN \cdot \left(\frac{M}{N1 \cdot N2}\right)$$

For example, suppose a 10 MHz crystal is being used with the selected oscillator mode of XT with PLL.

- If PLLPRE<4:0> = 0, then N1 = 2. This yields a VCO input of 10/2 = 5 MHz, which is within the acceptable range of 0.8-8 MHz.
- If PLLDIV<8:0> = 0x1E, then M = 32. This yields a VCO output of 5 x 32 = 160 MHz, which is within the 100-200 MHz ranged needed.
- If PLLPOST<1:0> = 0, then N2 = 2. This provides a Fosc of 160/2 = 80 MHz. The resultant device operating speed is 80/2 = 40 MIPS.

EQUATION 8-3: XT WITH PLL MODE EXAMPLE

$$FCY = \frac{FOSC}{2} = \frac{1}{2} \cdot \left(\frac{10000000 \cdot 32}{2 \cdot 2}\right) = 40 \text{ MIPS}$$

FIGURE 8-2: dsPIC33FJ32MC202/204 and dsPIC33FJ16MC304 PLL BLOCK DIAGRAM

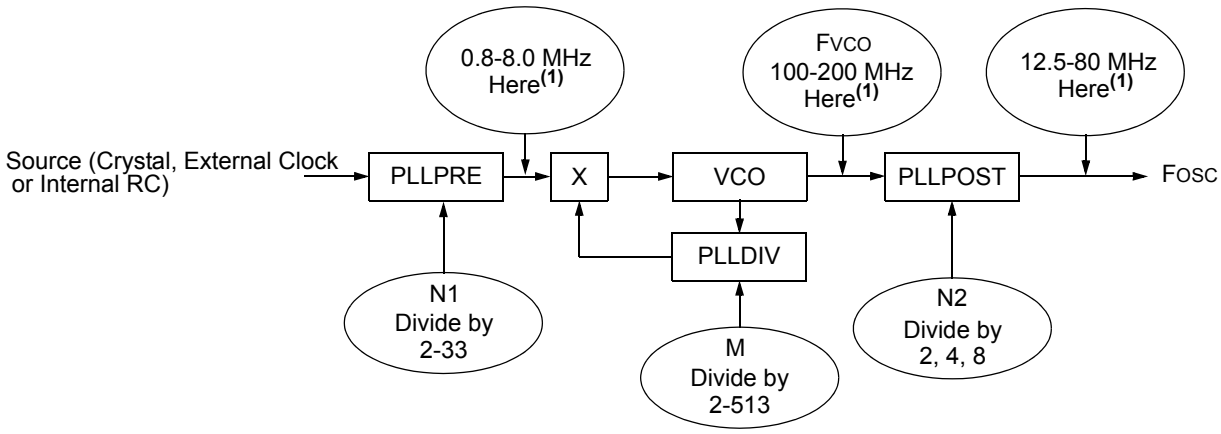

Note 1: This frequency range must be satisfied at all times.

TABLE 8-1: CONFIGURATION BIT VALUES FOR CLOCK SELECTION

Oscillator Mode	Oscillator Source	POSCMD<1:0>	FNOSC<2:0>	See Note
Fast RC Oscillator with Divide-by-N (FRCDIVN)	Internal	xx	111	**1, 2**
Fast RC Oscillator with Divide-by-16 (FRCDIV16)	Internal	xx	110	**1**
Low-Power RC Oscillator (LPRC)	Internal	xx	101	**1**
Secondary (Timer1) Oscillator (Sosc)	Secondary	xx	100	**1**
Primary Oscillator (HS) with PLL (HSPLL)	Primary	10	011	**—**
Primary Oscillator (XT) with PLL (XTPLL)	Primary	01	011	**—**
Primary Oscillator (EC) with PLL (ECPLL)	Primary	00	011	**1**
Primary Oscillator (HS)	Primary	10	010	**—**
Primary Oscillator (XT)	Primary	01	010	**—**
Primary Oscillator (EC)	Primary	00	010	**1**
Fast RC Oscillator with PLL (FRCPLL)	Internal	xx	001	**1**
Fast RC Oscillator (FRC)	Internal	xx	000	**1**

Note 1: OSC2 pin function is determined by the OSCIOFNC Configuration bit.

2: This is the default oscillator mode for an unprogrammed (erased) device.

8.2 Oscillator Resources

Many useful resources are provided on the main product page of the Microchip web site for the devices listed in this data sheet. This product page, which can be accessed using this link, contains the latest updates and additional information.

Note:	In the event you are not able to access the product page using the link above, enter this URL in your browser: http://www.microchip.com/wwwproducts/Devices.aspx?dDocName=en530334

8.2.1 KEY RESOURCES

- **Section 7. "Oscillator"** (DS70186)
- Code Samples
- Application Notes
- Software Libraries
- Webinars
- All related dsPIC33F/PIC24H Family Reference Manuals Sections
- Development Tools

© 2007-2012 Microchip Technology Inc.

8.3 Oscillator Control Registers

REGISTER 8-1: OSCCON: OSCILLATOR CONTROL REGISTER(1,3)

U-0	R-0	R-0	R-0	U-0	R/W-y	R/W-y	R/W-y
—	COSC<2:0>			—	NOSC<2:0>(2)		
bit 15							bit 8

R/W-0	R/W-0	R-0	U-0	R/C-0	U-0	R/W-0	R/W-0
CLKLOCK	IOLOCK	LOCK	—	CF	—	LPOSCEN	OSWEN
bit 7							bit 0

Legend:	y = Value set from Configuration bits on POR		
R = Readable bit	W = Writable bit	U = Unimplemented bit, read as '0'	
-n = Value at POR	'1' = Bit is set	'0' = Bit is cleared	x = Bit is unknown

bit 15 **Unimplemented:** Read as '0'

bit 14-12 **COSC<2:0>:** Current Oscillator Selection bits (read-only)
111 = Fast RC oscillator (FRC) with Divide-by-n
110 = Fast RC oscillator (FRC) with Divide-by-16
101 = Low-Power RC oscillator (LPRC)
100 = Secondary oscillator (Sosc)
011 = Primary oscillator (XT, HS, EC) with PLL
010 = Primary oscillator (XT, HS, EC)
001 = Fast RC oscillator (FRC) with PLL
000 = Fast RC oscillator (FRC)

bit 11 **Unimplemented:** Read as '0'

bit 10-8 **NOSC<2:0>:** New Oscillator Selection bits(2)
111 = Fast RC oscillator (FRC) with Divide-by-n
110 = Fast RC oscillator (FRC) with Divide-by-16
101 = Low-Power RC oscillator (LPRC)
100 = Secondary oscillator (Sosc)
011 = Primary oscillator (XT, HS, EC) with PLL
010 = Primary oscillator (XT, HS, EC)
001 = Fast RC oscillator (FRC) with PLL
000 = Fast RC oscillator (FRC)

bit 7 **CLKLOCK:** Clock Lock Enable bit
If clock switching is enabled and FSCM is disabled, (FOSC<FCKSM> = 0b01)
1 = Clock switching is disabled, system clock source is locked
0 = Clock switching is enabled, system clock source can be modified by clock switching

bit 6 **IOLOCK:** Peripheral Pin Select Lock bit
1 = Peripherial pin select is locked, write to peripheral pin select registers not allowed
0 = Peripherial pin select is not locked, write to peripheral pin select registers allowed

bit 5 **LOCK:** PLL Lock Status bit (read-only)
1 = Indicates that PLL is in lock, or PLL start-up timer is satisfied
0 = Indicates that PLL is out of lock, start-up timer is in progress or PLL is disabled

bit 4 **Unimplemented:** Read as '0'

Note 1: Writes to this register require an unlock sequence. Refer to **Section 7. "Oscillator"** (DS70186) in the *"dsPIC33F/PIC24H Family Reference Manual"* for details.

2: Direct clock switches between any primary oscillator mode with PLL and FRCPLL mode are not permitted. This applies to clock switches in either direction. In these instances, the application must switch to FRC mode as a transition clock source between the two PLL modes.

3: This register is reset only on a Power-on Reset (POR).

REGISTER 8-1: OSCCON: OSCILLATOR CONTROL REGISTER(1,3) (CONTINUED)

bit 3 **CF:** Clock Fail Detect bit (read/clear by application)
1 = FSCM has detected clock failure
0 = FSCM has not detected clock failure

bit 2 **Unimplemented:** Read as '0'

bit 1 **LPOSCEN:** Secondary (LP) Oscillator Enable bit
1 = Enable secondary oscillator
0 = Disable secondary oscillator

bit 0 **OSWEN:** Oscillator Switch Enable bit
1 = Request oscillator switch to selection specified by NOSC<2:0> bits
0 = Oscillator switch is complete

Note 1: Writes to this register require an unlock sequence. Refer to **Section 7. "Oscillator"** (DS70186) in the *"dsPIC33F/PIC24H Family Reference Manual"* for details.

2: Direct clock switches between any primary oscillator mode with PLL and FRCPLL mode are not permitted. This applies to clock switches in either direction. In these instances, the application must switch to FRC mode as a transition clock source between the two PLL modes.

3: This register is reset only on a Power-on Reset (POR).

© 2007-2012 Microchip Technology Inc.

REGISTER 8-2: CLKDIV: CLOCK DIVISOR REGISTER(2)

R/W-0	R/W-0	R/W-1	R/W-1	R/W-0	R/W-0	R/W-0	R/W-0
ROI	DOZE<2:0>			DOZEN(1)	FRCDIV<2:0>		
bit 15							bit 8

R/W-0	R/W-1	U-0	R/W-0	R/W-0	R/W-0	R/W-0	R/W-0
PLLPOST<1:0>		—	PLLPRE<4:0>				
bit 7							bit 0

Legend:	y = Value set from Configuration bits on POR		
R = Readable bit	W = Writable bit	U = Unimplemented bit, read as '0'	
-n = Value at POR	'1' = Bit is set	'0' = Bit is cleared	x = Bit is unknown

bit 15 **ROI:** Recover on Interrupt bit
1 = Interrupts will clear the DOZEN bit and the processor clock/peripheral clock ratio is set to 1:1
0 = Interrupts have no effect on the DOZEN bit

bit 14-12 **DOZE<2:0>:** Processor Clock Reduction Select bits
111 = FCY/128
110 = FCY/64
101 = FCY/32
100 = FCY/16
011 = FCY/8 (default)
010 = FCY/4
001 = FCY/2
000 = FCY/1

bit 11 **DOZEN:** DOZE Mode Enable bit(1)
1 = DOZE<2:0> field specifies the ratio between the peripheral clocks and the processor clocks
0 = Processor clock/peripheral clock ratio forced to 1:1

bit 10-8 **FRCDIV<2:0>:** Internal Fast RC Oscillator Postscaler bits
111 = FRC divide by 256
110 = FRC divide by 64
101 = FRC divide by 32
100 = FRC divide by 16
011 = FRC divide by 8
010 = FRC divide by 4
001 = FRC divide by 2
000 = FRC divide by 1 (default)

bit 7-6 **PLLPOST<1:0>:** PLL VCO Output Divider Select bits (also denoted as 'N2', PLL postscaler)
11 = Output/8
10 = Reserved
01 = Output/4 (default)
00 = Output/2

bit 5 **Unimplemented:** Read as '0'

bit 4-0 **PLLPRE<4:0>:** PLL Phase Detector Input Divider bits (also denoted as 'N1', PLL prescaler)
00000 = Input/2 (default)
00001 = Input/3
•
•
•
11111 = Input/33

Note 1: This bit is cleared when the ROI bit is set and an interrupt occurs.
2: This register is reset only on a Power-on Reset (POR).

REGISTER 8-3: PLLFBD: PLL FEEDBACK DIVISOR REGISTER(1)

U-0	U-0	U-0	U-0	U-0	U-0	U-0	R/W-0
—	—	—	—	—	—	—	PLLDIV<8>
bit 15							bit 8

R/W-0	R/W-0	R/W-1	R/W-1	R/W-0	R/W-0	R/W-0	R/W-0
PLLDIV<7:0>							
bit 7							bit 0

Legend:			
R = Readable bit	W = Writable bit	U = Unimplemented bit, read as '0'	
-n = Value at POR	'1' = Bit is set	'0' = Bit is cleared	x = Bit is unknown

bit 15-9 **Unimplemented:** Read as '0'

bit 8-0 **PLLDIV<8:0>:** PLL Feedback Divisor bits (also denoted as 'M', PLL multiplier)

000000000 = 2
000000001 = 3
000000010 = 4
•
•
•
000110000 = 50 (default)
•
•
•
111111111 = 513

Note 1: This register is reset only on a Power-on Reset (POR).

© 2007-2012 Microchip Technology Inc.

REGISTER 8-4: OSCTUN: FRC OSCILLATOR TUNING REGISTER(2)

U-0	U-0	U-0	U-0	U-0	U-0	U-0	U-0
—	—	—	—	—	—	—	—
bit 15							bit 8

U-0	U-0	R/W-0	R/W-0	R/W-0	R/W-0	R/W-0	R/W-0
—	—	TUN<5:0>(1)					
bit 7							bit 0

Legend:			
R = Readable bit	W = Writable bit	U = Unimplemented bit, read as '0'	
-n = Value at POR	'1' = Bit is set	'0' = Bit is cleared	x = Bit is unknown

bit 15-6 **Unimplemented:** Read as '0'

bit 5-0 **TUN<5:0>:** FRC Oscillator Tuning bits(1)

011111 = Center frequency + 11.625% (8.23 MHz)
011110 = Center frequency + 11.25% (8.20 MHz)
•
•
•
000001 = Center frequency + 0.375% (7.40 MHz)
000000 = Center frequency (7.37 MHz nominal)
111111 = Center frequency -0.375% (7.345 MHz)
•
•
•
100001 = Center frequency -11.625% (6.52 MHz)
100000 = Center frequency -12% (6.49 MHz)

Note 1: OSCTUN functionality has been provided to help customers compensate for temperature effects on the FRC frequency over a wide range of temperatures. The tuning step size is an approximation and is neither characterized nor tested.

2: This register is reset only on a Power-on Reset (POR).

8.4 Clock Switching Operation

Applications are free to switch among any of the four clock sources (Primary, LP, FRC and LPRC) under software control at any time. To limit the possible side effects of this flexibility, dsPIC33FJ32MC202/204 and dsPIC33FJ16MC304 devices have a safeguard lock built into the switch process.

Note:	Primary Oscillator mode has three different submodes (XT, HS and EC), which are determined by the POSCMD<1:0> Configuration bits. While an application can switch to and from Primary Oscillator mode in software, it cannot switch among the different primary submodes without reprogramming the device.

8.4.1 ENABLING CLOCK SWITCHING

To enable clock switching, the FCKSM1 Configuration bit in the Configuration register must be programmed to '0'. (Refer to **Section 21.1 "Configuration Bits"** for further details.) If the FCKSM1 Configuration bit is unprogrammed ('1'), the clock switching function and Fail-Safe Clock Monitor function are disabled. This is the default setting.

The NOSC control bits (OSCCON<10:8>) do not control the clock selection when clock switching is disabled. However, the COSC bits (OSCCON<14:12>) reflect the clock source selected by the FNOSC Configuration bits.

The OSWEN control bit (OSCCON<0>) has no effect when clock switching is disabled. It is held at '0' at all times.

8.4.2 OSCILLATOR SWITCHING SEQUENCE

Performing a clock switch requires this basic sequence:

1. If desired, read the COSC bits (OSCCON<14:12>) to determine the current oscillator source.
2. Perform the unlock sequence to allow a write to the OSCCON register high byte.
3. Write the appropriate value to the NOSC control bits (OSCCON<10:8>) for the new oscillator source.
4. Perform the unlock sequence to allow a write to the OSCCON register low byte.
5. Set the OSWEN bit (OSCCON<0>) to initiate the oscillator switch.

Once the basic sequence is completed, the system clock hardware responds automatically as follows:

1. The clock switching hardware compares the COSC status bits with the new value of the NOSC control bits. If they are the same, the clock switch is a redundant operation. In this case, the OSWEN bit is cleared automatically and the clock switch is aborted.
2. If a valid clock switch has been initiated, the LOCK (OSCCON<5>) and the CF (OSCCON<3>) status bits are cleared.
3. The new oscillator is turned on by the hardware if it is not currently running. If a crystal oscillator must be turned on, the hardware waits until the Oscillator Start-up Timer (OST) expires. If the new source is using the PLL, the hardware waits until a PLL lock is detected (LOCK = 1).
4. The hardware waits for 10 clock cycles from the new clock source and then performs the clock switch.
5. The hardware clears the OSWEN bit to indicate a successful clock transition. In addition, the NOSC bit values are transferred to the COSC status bits.
6. The old clock source is turned off at this time, with the exception of LPRC (if WDT or FSCM are enabled) or LP (if LPOSCEN remains set).

Note 1:	The processor continues to execute code throughout the clock switching sequence. Timing-sensitive code should not be executed during this time.
2:	Direct clock switches between any primary oscillator mode with PLL and FRCPLL mode are not permitted. This applies to clock switches in either direction. In these instances, the application must switch to FRC mode as a transition clock source between the two PLL modes.
3:	Refer to **Section 7. "Oscillator"** (DS70186) in the *"dsPIC33F/PIC24H Family Reference Manual"* for details.

8.5 Fail-Safe Clock Monitor (FSCM)

The Fail-Safe Clock Monitor (FSCM) allows the device to continue to operate even in the event of an oscillator failure. The FSCM function is enabled by programming. If the FSCM function is enabled, the LPRC internal oscillator runs at all times (except during Sleep mode) and is not subject to control by the Watchdog Timer.

In the event of an oscillator failure, the FSCM generates a clock failure trap event and switches the system clock over to the FRC oscillator. Then the application program can either attempt to restart the oscillator or execute a controlled shutdown. The trap can be treated as a warm Reset by simply loading the Reset address into the oscillator fail trap vector.

If the PLL multiplier is used to scale the system clock, the internal FRC is also multiplied by the same factor on clock failure. Essentially, the device switches to FRC with PLL on a clock failure.

© 2007-2012 Microchip Technology Inc.

9.0 POWER-SAVING FEATURES

Note 1: This data sheet summarizes the features of the dsPIC33FJ32MC202/204 and dsPIC33FJ16MC304 devices. It is not intended to be a comprehensive reference source. To complement the information in this data sheet, refer to **Section 9. "Watchdog Timer and Power-Saving Modes"** (DS70196) the "*dsPIC33F/PIC24H Family Reference Manual*", which is available from the Microchip web site (www.microchip.com).

2: Some registers and associated bits described in this section may not be available on all devices. Refer to **Section 4.0 "Memory Organization"** in this data sheet for device-specific register and bit information.

The dsPIC33FJ32MC202/204 and dsPIC33FJ16MC304 devices provide the ability to manage power consumption by selectively managing clocking to the CPU and the peripherals. In general, a lower clock frequency and a reduction in the number of circuits being clocked constitutes lower consumed power. dsPIC33FJ32MC202/204 and dsPIC33FJ16MC304 devices can manage power consumption in four different ways:

- Clock frequency
- Instruction-based Sleep and Idle modes
- Software-controlled Doze mode
- Selective peripheral control in software

Combinations of these methods can be used to selectively tailor an application's power consumption while still maintaining critical application features, such as timing-sensitive communications.

9.1 Clock Frequency and Clock Switching

dsPIC33FJ32MC202/204 and dsPIC33FJ16MC304 devices allow a wide range of clock frequencies to be selected under application control. If the system clock configuration is not locked, users can choose low-power or high-precision oscillators by simply changing the NOSC bits (OSCCON<10:8>). The process of changing a system clock during operation, as well as limitations to the process, are discussed in more detail in **Section 8.0 "Oscillator Configuration"**.

9.2 Instruction-Based Power-Saving Modes

dsPIC33FJ32MC202/204 and dsPIC33FJ16MC304 devices have two special power-saving modes that are entered through the execution of a special `PWRSAV` instruction. Sleep mode stops clock operation and halts all code execution. Idle mode halts the CPU and code execution, but allows peripheral modules to continue operation. The assembler syntax of the `PWRSAV` instruction is shown in Example 9-1.

Note: `SLEEP_MODE` and `IDLE_MODE` are constants defined in the assembler include file for the selected device.

Sleep and Idle modes can be exited as a result of an enabled interrupt, WDT time-out or a device Reset. When the device exits these modes, it is said to wake-up.

9.2.1 SLEEP MODE

The following occur in Sleep mode:

- The system clock source is shut down. If an on-chip oscillator is used, it is turned off.
- The device current consumption is reduced to a minimum, provided that no I/O pin is sourcing current.
- The Fail-Safe Clock Monitor does not operate, since the system clock source is disabled.
- The LPRC clock continues to run in Sleep mode if the WDT is enabled.
- The WDT, if enabled, is automatically cleared prior to entering Sleep mode.
- Some device features or peripherals may continue to operate. This includes items such as the input change notification on the I/O ports, or peripherals that use an external clock input.
- Any peripheral that requires the system clock source for its operation is disabled.

The device will wake-up from Sleep mode on any of the these events:

- Any interrupt source that is individually enabled
- Any form of device Reset
- A WDT time-out

On wake-up from Sleep mode, the processor restarts with the same clock source that was active when Sleep mode was entered.

EXAMPLE 9-1: `PWRSAV` INSTRUCTION SYNTAX

```
PWRSAV  #SLEEP_MODE    ; Put the device into SLEEP mode
PWRSAV  #IDLE_MODE     ; Put the device into IDLE mode
```

9.2.2 IDLE MODE

The following occur in Idle mode:

- The CPU stops executing instructions.
- The WDT is automatically cleared.
- The system clock source remains active. By default, all peripheral modules continue to operate normally from the system clock source, but can also be selectively disabled (see **Section 9.4 "Peripheral Module Disable"**).
- If the WDT or FSCM is enabled, the LPRC also remains active.

The device will wake from Idle mode on any of these events:

- Any interrupt that is individually enabled
- Any device Reset
- A WDT time-out

On wake-up from Idle mode, the clock is reapplied to the CPU and instruction execution will begin (2-4 cycles later), starting with the instruction following the `PWRSAV` instruction, or the first instruction in the ISR.

9.2.3 INTERRUPTS COINCIDENT WITH POWER SAVE INSTRUCTIONS

Any interrupt that coincides with the execution of a `PWRSAV` instruction is held off until entry into Sleep or Idle mode has completed. The device then wakes up from Sleep or Idle mode.

9.3 Doze Mode

The preferred strategies for reducing power consumption are changing clock speed and invoking one of the power-saving modes. In some circumstances, this may not be practical. For example, it may be necessary for an application to maintain uninterrupted synchronous communication, even while it is doing nothing else. Reducing system clock speed can introduce communication errors, while using a power-saving mode can stop communications completely.

Doze mode is a simple and effective alternative method to reduce power consumption while the device is still executing code. In this mode, the system clock continues to operate from the same source and at the same speed. Peripheral modules continue to be clocked at the same speed, while the CPU clock speed is reduced. Synchronization between the two clock domains is maintained, allowing the peripherals to access the SFRs while the CPU executes code at a slower rate.

Doze mode is enabled by setting the DOZEN bit (CLKDIV<11>). The ratio between peripheral and core clock speed is determined by the DOZE<2:0> bits (CLKDIV<14:12>). There are eight possible configurations, from 1:1 to 1:128, with 1:1 being the default setting.

Programs can use Doze mode to selectively reduce power consumption in event-driven applications. This allows clock-sensitive functions, such as synchronous communications, to continue without interruption while the CPU idles, waiting for something to invoke an interrupt routine. An automatic return to full-speed CPU operation on interrupts can be enabled by setting the ROI bit (CLKDIV<15>). By default, interrupt events have no effect on Doze mode operation.

For example, suppose the device is operating at 20 MIPS and the CAN module has been configured for 500 kbps based on this device operating speed. If the device is placed in Doze mode with a clock frequency ratio of 1:4, the CAN module continues to communicate at the required bit rate of 500 kbps, but the CPU now starts executing instructions at a frequency of 5 MIPS.

9.4 Peripheral Module Disable

The Peripheral Module Disable registers (PMD) provide a method to disable a peripheral module by stopping all clock sources supplied to that module. When a peripheral is disabled using the appropriate PMD control bit, the peripheral is in a minimum power consumption state. The control and status registers associated with the peripheral are also disabled, so writes to those registers will have no effect and read values will be invalid.

A peripheral module is enabled only if both the associated bit in the PMD register is cleared and the peripheral is supported by the specific dsPIC® DSC variant. If the peripheral is present in the device, it is enabled in the PMD register by default.

Note:	If a PMD bit is set, the corresponding module is disabled after a delay of one instruction cycle. Similarly, if a PMD bit is cleared, the corresponding module is enabled after a delay of one instruction cycle (assuming the module control registers are already configured to enable module operation).

© 2007-2012 Microchip Technology Inc.

9.5 Power-Saving Resources

Many useful resources are provided on the main product page of the Microchip web site for the devices listed in this data sheet. This product page, which can be accessed using this link, contains the latest updates and additional information.

Note:	In the event you are not able to access the product page using the link above, enter this URL in your browser: http://www.microchip.com/wwwproducts/Devices.aspx?dDocName=en530334

9.5.1 KEY RESOURCES

- **Section 9. "Watchdog Timer and Power-Saving Modes"** (DS70196)
- Code Samples
- Application Notes
- Software Libraries
- Webinars
- All related dsPIC33F/PIC24H Family Reference Manuals Sections
- Development Tools

9.6 Power-Saving Control Registers

REGISTER 9-1: PMD1: PERIPHERAL MODULE DISABLE CONTROL REGISTER 1

U-0	U-0	R/W-0	R/W-0	R/W-0	R/W-0	R/W-0	U-0
—	—	T3MD	T2MD	T1MD	QEIMD	PWM1MD	—
bit 15							bit 8

R/W-0	U-0	R/W-0	U-0	R/W-0	U-0	U-0	R/W-0
I2C1MD	—	U1MD	—	SPI1MD	—	—	AD1MD(1)
bit 7							bit 0

Legend:			
R = Readable bit	W = Writable bit	U = Unimplemented bit, read as '0'	
-n = Value at POR	'1' = Bit is set	'0' = Bit is cleared	x = Bit is unknown

bit 15-14 **Unimplemented:** Read as '0'

bit 13 **T3MD:** Timer3 Module Disable bit
1 = Timer3 module is disabled
0 = Timer3 module is enabled

bit 12 **T2MD:** Timer2 Module Disable bit
1 = Timer2 module is disabled
0 = Timer2 module is enabled

bit 11 **T1MD:** Timer1 Module Disable bit
1 = Timer1 module is disabled
0 = Timer1 module is enabled

bit 10 **QEIMD:** QEI Module Disable bit
1 = QEI module is disabled
0 = QEI module is enabled

bit 9 **PWM1MD:** PWM1 Module Disable bit
1 = PWM1 module is disabled
0 = PWM1 module is enabled

bit 8 **Unimplemented:** Read as '0'

bit 7 **I2C1MD:** I2C1 Module Disable bit
1 = I2C1 module is disabled
0 = I2C1 module is enabled

bit 6 **Unimplemented:** Read as '0'

bit 5 **U1MD:** UART1 Module Disable bit
1 = UART1 module is disabled
0 = UART1 module is enabled

bit 4 **Unimplemented:** Read as '0'

bit 3 **SPI1MD:** SPI1 Module Disable bit
1 = SPI1 module is disabled
0 = SPI1 module is enabled

bit 2-1 **Unimplemented:** Read as '0'

bit 0 **AD1MD:** ADC1 Module Disable bit(1)
1 = ADC1 module is disabled
0 = ADC1 module is enabled

Note 1: PCFGx bits have no effect if the ADC module is disabled by setting this bit. In this case, all port pins multiplexed with ANx will be in Digital mode.

© 2007-2012 Microchip Technology Inc.

REGISTER 9-2: PMD2: PERIPHERAL MODULE DISABLE CONTROL REGISTER 2

R/W-0	R/W-0	U-0	U-0	U-0	U-0	R/W-0	R/W-0
IC8MD	IC7MD	—	—	—	—	IC2MD	IC1MD
bit 15							bit 8

U-0	U-0	U-0	U-0	U-0	U-0	R/W-0	R/W-0
—	—	—	—	—	—	OC2MD	OC1MD
bit 7							bit 0

Legend:			
R = Readable bit	W = Writable bit	U = Unimplemented bit, read as '0'	
-n = Value at POR	'1' = Bit is set	'0' = Bit is cleared	x = Bit is unknown

bit 15 **IC8MD:** Input Capture 8 Module Disable bit
1 = Input Capture 8 module is disabled
0 = Input Capture 8 module is enabled

bit 14 **IC7MD:** Input Capture 2 Module Disable bit
1 = Input Capture 7 module is disabled
0 = Input Capture 7 module is enabled

bit 13-10 **Unimplemented:** Read as '0'

bit 9 **IC2MD:** Input Capture 2 Module Disable bit
1 = Input Capture 2 module is disabled
0 = Input Capture 2 module is enabled

bit 8 **IC1MD:** Input Capture 1 Module Disable bit
1 = Input Capture 1 module is disabled
0 = Input Capture 1 module is enabled

bit 7-2 **Unimplemented:** Read as '0'

bit 1 **OC2MD:** Output Compare 2 Module Disable bit
1 = Output Compare 2 module is disabled
0 = Output Compare 2 module is enabled

bit 0 **OC1MD:** Output Compare 1 Module Disable bit
1 = Output Compare 1 module is disabled
0 = Output Compare 1 module is enabled

REGISTER 9-3: PMD3: PERIPHERAL MODULE DISABLE CONTROL REGISTER 3

U-0	U-0	U-0	U-0	U-0	U-0	U-0	U-0
—	—	—	—	—	—	—	—
bit 15							bit 8

U-0	U-0	U-0	R/W-0	U-0	U-0	U-0	U-0
—	—	—	PWM2MD	—	—	—	—
bit 7							bit 0

Legend:			
R = Readable bit	W = Writable bit	U = Unimplemented bit, read as ‘0’	
-n = Value at POR	‘1’ = Bit is set	‘0’ = Bit is cleared	x = Bit is unknown

bit 15-5 **Unimplemented:** Read as ‘0’

bit 4 **PWM2MD:** PWM2 Module Disable bit
1 = PWM2 module is disabled
0 = PWM2 module is enabled

bit 3-0 **Unimplemented:** Read as ‘0’

© 2007-2012 Microchip Technology Inc.

10.0 I/O PORTS

Note 1: This data sheet summarizes the features of the dsPIC33FJ32MC202/204 and dsPIC33FJ16MC304 devices. It is not intended to be a comprehensive reference source. To complement the information in this data sheet, refer to **Section 10. "I/O Ports"** (DS70193) of the *"dsPIC33F/PIC24H Family Reference Manual"*, which is available on Microchip web site (www.microchip.com).

2: Some registers and associated bits described in this section may not be available on all devices. Refer to **Section 4.0 "Memory Organization"** in this data sheet for device-specific register and bit information.

All of the device pins (except VDD, VSS, MCLR and OSC1/CLKI) are shared among the peripherals and the parallel I/O ports. All I/O input ports feature Schmitt Trigger inputs for improved noise immunity.

10.1 Parallel I/O (PIO) Ports

Generally a parallel I/O port that shares a pin with a peripheral is subservient to the peripheral. The peripheral's output buffer data and control signals are provided to a pair of multiplexers. The multiplexers select whether the peripheral or the associated port has ownership of the output data and control signals of the I/O pin. The logic also prevents "loop through", in which a port's digital output can drive the input of a peripheral that shares the same pin. Figure 10-1 shows how ports are shared with other peripherals and the associated I/O pin to which they are connected.

When a peripheral is enabled and the peripheral is actively driving an associated pin, the use of the pin as a general purpose output pin is disabled. The I/O pin can be read, but the output driver for the parallel port bit is disabled. If a peripheral is enabled, but the peripheral is not actively driving a pin, that pin can be driven by a port.

All port pins have three registers directly associated with their operation as digital I/O. The data direction register (TRISx) determines whether the pin is an input or an output. If the data direction bit is a '1', then the pin is an input. All port pins are defined as inputs after a Reset. Reads from the latch (LATx) read the latch. Writes to the latch write the latch. Reads from the port (PORTx) read the port pins, while writes to the port pins write the latch.

Any bit and its associated data and control registers that are not valid for a particular device will be disabled. That means the corresponding LATx and TRISx registers and the port pin will read as zeros.

When a pin is shared with another peripheral or function that is defined as an input only, it is nevertheless regarded as a dedicated port because there is no other competing source of outputs.

FIGURE 10-1: BLOCK DIAGRAM OF A TYPICAL SHARED PORT STRUCTURE

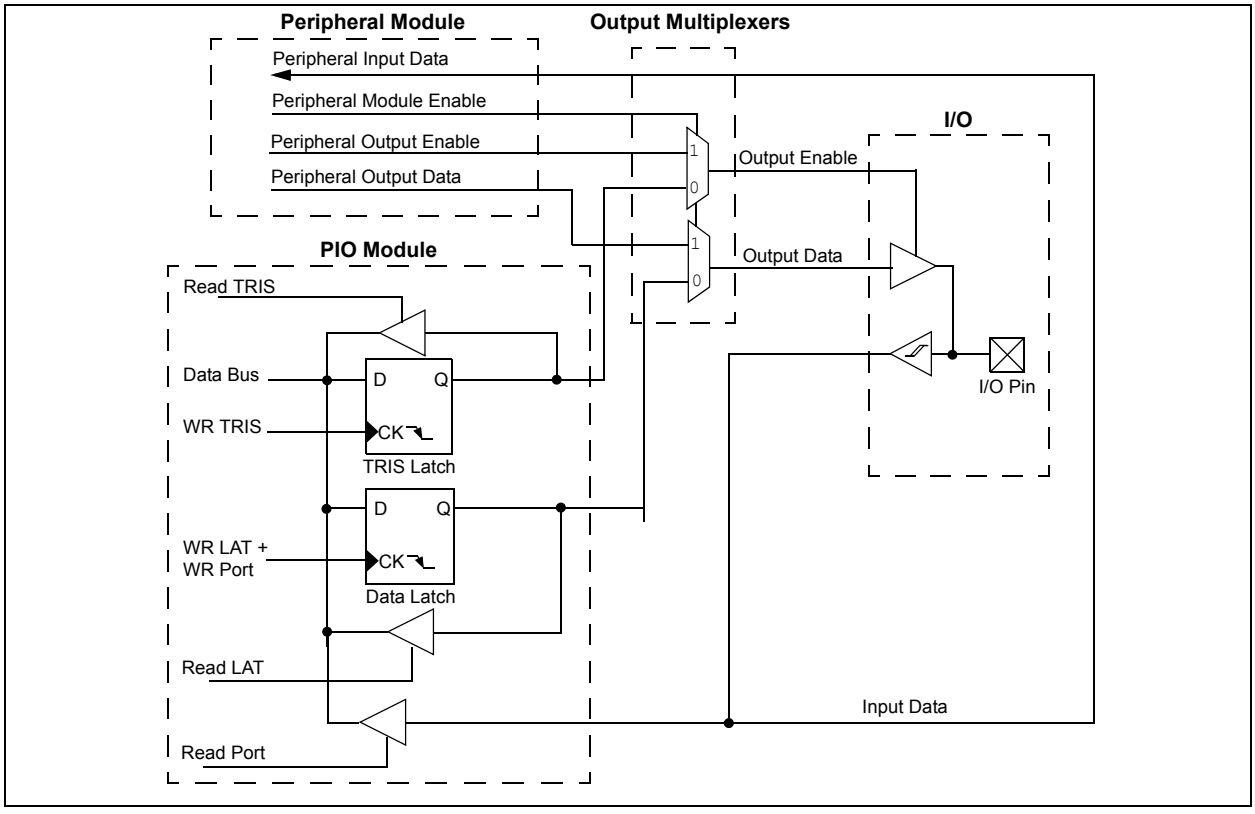

10.2 Open-Drain Configuration

In addition to the PORT, LAT and TRIS registers for data control, some port pins can also be individually configured for either digital or open-drain output. This is controlled by the Open-Drain Control register, ODCx, associated with each port. Setting any of the bits configures the corresponding pin to act as an open-drain output.

The open-drain feature allows the generation of outputs higher than VDD (e.g., 5V) on any desired 5V tolerant pins by using external pull-up resistors. The maximum open-drain voltage allowed is the same as the maximum VIH specification.

See the **"Pin Diagrams"** section for the available pins and their functionality.

10.3 Configuring Analog Port Pins

The AD1PCFG and TRIS registers control the operation of the analog-to-digital (A/D) port pins. The port pins that are to function as analog inputs must have their corresponding TRIS bit set (input). If the TRIS bit is cleared (output), the digital output level (VOH or VOL) will be converted.

The AD1PCFGL register has a default value of 0x0000; therefore, all pins that share ANx functions are analog (not digital) by default.

When the PORT register is read, all pins configured as analog input channels will read as cleared (a low level).

Pins configured as digital inputs will not convert an analog input. Analog levels on any pin defined as a digital input (including the ANx pins) can cause the input buffer to consume current that exceeds the device specifications.

10.4 I/O Port Write/Read Timing

One instruction cycle is required between a port direction change or port write operation and a read operation of the same port. Typically this instruction would be an NOP. Examples are shown in Example 10-1 and Example 10-2. This also applies to PORT bit operations, such as `BSET PORTB, # RB0`, which are single cycle read-modify-write. All PORT bit operations, such as `MOV PORTB, W0` or `BSET PORTB, # RBx`, read the pin and *not* the latch.

10.5 Input Change Notification

The input change notification function of the I/O ports allows the dsPIC33FJ32MC202/204 and dsPIC33FJ16MC304 devices to generate interrupt requests to the processor in response to a change-of-state on selected input pins. This feature can detect input change-of-states even in Sleep mode, when the clocks are disabled. Depending on the device pin count, up to 31 external signals (CNx pin) can be selected (enabled) for generating an interrupt request on a change-of-state.

Four control registers are associated with the CN module. The CNEN1 and CNEN2 registers contain the interrupt enable control bits for each of the CN input pins. Setting any of these bits enables a CN interrupt for the corresponding pins.

Each CN pin also has a weak pull-up connected to it. The pull-ups act as a current source connected to the pin, and eliminate the need for external resistors when push-button or keypad devices are connected. The pull-ups are enabled separately using the CNPU1 and CNPU2 registers, which contain the control bits for each of the CN pins. Setting any of the control bits enables the weak pull-ups for the corresponding pins.

Note:	Pull-ups on change notification pins should always be disabled when the port pin is configured as a digital output.

EXAMPLE 10-1: PORT WRITE/READ EXAMPLE

```
MOV     0xFF00, W0          ; Configure PORTB<15:8> as inputs
MOV     W0, TRISBB          ; and PORTB<7:0> as outputs
NOP                         ; Delay 1 cycle
btss    PORTB, #13          ; Next Instruction
```

EXAMPLE 10-2: PORT BIT OPERATIONS

```
Incorrect:
BSET    PORTB, #RB1         ;Set PORTB<RB1> high
BSET    PORTB, #RB6         ;Set PORTB<RB6> high

Correct:
BSET    PORTB, #RB1         ;Set PORTB<RB1> high
NOP
BSET    PORTB, #RB6         ;Set PORTB<RB6> high
NOP

Preferred:
BSET    LATB, LATB1         ;Set PORTB<RB1> high
BSET    LATB, LATB6         ;Set PORTB<RB6> high
```


© 2007-2012 Microchip Technology Inc.

10.6 Peripheral Pin Select

Peripheral pin select configuration enables peripheral set selection and placement on a wide range of I/O pins. By increasing the pinout options available on a particular device, programmers can better tailor the microcontroller to their entire application, rather than trimming the application to fit the device.

The peripheral pin select configuration feature operates over a fixed subset of digital I/O pins. Programmers can independently map the input and/or output of most digital peripherals to any one of these I/O pins. Peripheral pin select is performed in software, and generally does not require the device to be reprogrammed. Hardware safeguards are included that prevent accidental or spurious changes to the peripheral mapping, once it has been established.

10.6.1 AVAILABLE PINS

The peripheral pin select feature is used with a range of up to 26 pins. The number of available pins depends on the particular device and its pin count. Pins that support the peripheral pin select feature include the designation “RPn” in their full pin designation, where “RP” designates a remappable peripheral and “n” is the remappable pin number.

10.6.2 CONTROLLING PERIPHERAL PIN SELECT

Peripheral pin select features are controlled through two sets of special function registers: one to map peripheral inputs, and one to map outputs. Because they are separately controlled, a particular peripheral’s input and output (if the peripheral has both) can be placed on any selectable function pin without constraint.

The association of a peripheral to a peripheral selectable pin is handled in two different ways, depending on whether an input or output is being mapped.

10.6.2.1 Input Mapping

The inputs of the peripheral pin select options are mapped on the basis of the peripheral. A control register associated with a peripheral dictates the pin it will be mapped to. The RPINRx registers are used to configure peripheral input mapping (see Register 10-1 through Register 10-13). Each register contains sets of 5-bit fields, with each set associated with one of the remappable peripherals. Programming a given peripheral’s bit field with an appropriate 5-bit value maps the RPn pin with that value to that peripheral. For any given device, the valid range of values for any bit field corresponds to the maximum number of peripheral pin selections supported by the device.

Figure 10-2 illustrates remappable pin selection for U1RX input.

Note:	For input mapping only, the Peripheral Pin Select (PPS) functionality does not have priority over the TRISx settings. Therefore, when configuring the RPn pin for input, the corresponding bit in the TRISx register must also be configured for input (i.e., set to ‘1’).

FIGURE 10-2: REMAPPABLE MUX INPUT FOR U1RX

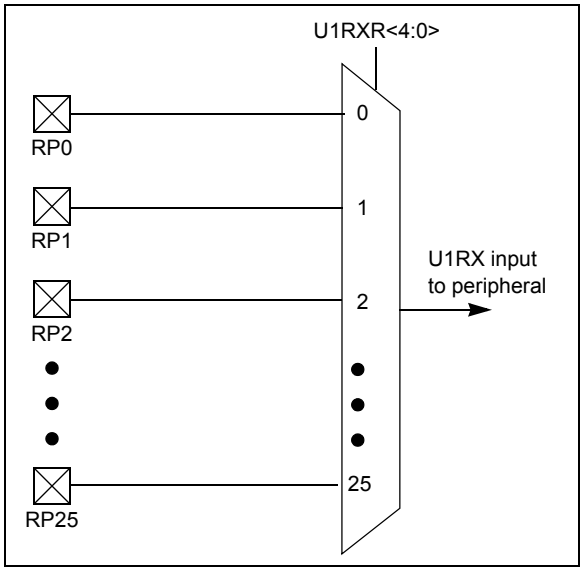

TABLE 10-1: SELECTABLE INPUT SOURCES (MAPS INPUT TO FUNCTION)(1)

Input Name	Function Name	Register	Configuration Bits
External Interrupt 1	INT1	RPINR0	INT1R<4:0>
External Interrupt 2	INT2	RPINR1	INT2R<4:0>
Timer2 External Clock	T2CK	RPINR3	T2CKR<4:0>
Timer3 External Clock	T3CK	RPINR3	T3CKR<4:0>
Input Capture 1	IC1	RPINR7	IC1R<4:0>
Input Capture 2	IC2	RPINR7	IC2R<4:0>
Input Capture 7	IC7	RPINR10	IC7R<4:0>
Input Capture 8	IC8	RPINR10	IC8R<4:0>
Output Compare Fault A	OCFA	RPINR11	OCFAR<4:0>
PWM1 Fault	$\overline{\text{FLTA1}}$	RPINR12	FLTA1R<4:0>
PWM2 Fault	$\overline{\text{FLTA2}}$	RPINR13	FLTA2R<4:0>
QEI1 Phase A	QEA	RPINR14	QEA1R<4:0>
QEI1 Phase B	QEB	RPINR14	QEB1R<4:0>
QEI1 Index	INDX	RPINR15	INDX1R<4:0>
UART1 Receive	U1RX	RPINR18	U1RXR<4:0>
UART1 Clear To Send	$\overline{\text{U1CTS}}$	RPINR18	U1CTSR<4:0>
SPI1 Data Input	SDI1	RPINR20	SDI1R<4:0>
SPI1 Clock Input	SCK1	RPINR20	SCK1R<4:0>
SPI1 Slave Select Input	$\overline{\text{SS1}}$	RPINR21	SS1R<4:0>

Note 1: Unless otherwise noted, all inputs use the Schmitt input buffers.

© 2007-2012 Microchip Technology Inc.

10.6.2.2 Output Mapping

In contrast to inputs, the outputs of the peripheral pin select options are mapped on the basis of the pin. In this case, a control register associated with a particular pin dictates the peripheral output to be mapped. The RPORx registers are used to control output mapping. Like the RPINRx registers, each register contains sets of 5-bit fields, with each set associated with one RPn pin (see Register 10-14 through Register 10-26). The value of the bit field corresponds to one of the peripherals, and that peripheral's output is mapped to the pin (see Table 10-2 and Figure 10-3).

The list of peripherals for output mapping also includes a null value of 00000 because of the mapping technique. This permits any given pin to remain unconnected from the output of any of the pin selectable peripherals.

FIGURE 10-3: MULTIPLEXING OF REMAPPABLE OUTPUT FOR RPn

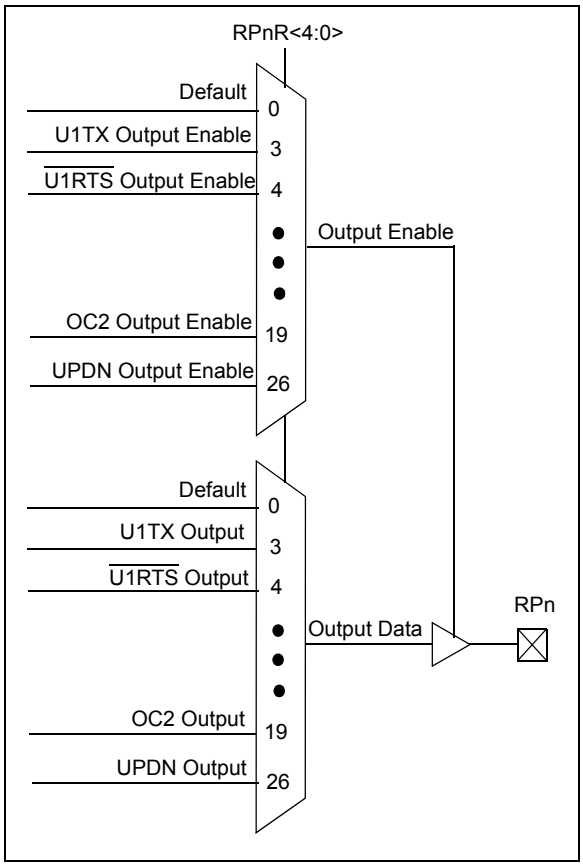

TABLE 10-2: OUTPUT SELECTION FOR REMAPPABLE PIN (RPn)

Function	RPnR<4:0>	Output Name
NULL	00000	RPn tied to default port pin
U1TX	00011	RPn tied to UART1 Transmit
U1RTS	00100	RPn tied to UART1 Ready To Send
SDO1	00111	RPn tied to SPI1 Data Output
SCK1OUT	01000	RPn tied to SPI1 Clock Output
SS1OUT	01001	RPn tied to SPI1 Slave Select Output
OC1	10010	RPn tied to Output Compare 1
OC2	10011	RPn tied to Output Compare 2
UPDN	11010	RPn tied to QEI direction (UPDN) status

10.6.3 CONTROLLING CONFIGURATION CHANGES

Because peripheral remapping can be changed during run time, some restrictions on peripheral remapping are needed to prevent accidental configuration changes. dsPIC33F devices include three features to prevent alterations to the peripheral map:

- Control register lock sequence
- Continuous state monitoring
- Configuration bit pin select lock

10.6.3.1 Control Register Lock

Under normal operation, writes to the RPINRx and RPORx registers are not allowed. Attempted writes appear to execute normally, but the contents of the registers remain unchanged. To change these registers, they must be unlocked in hardware. The register lock is controlled by the IOLOCK bit (OSCCON<6>). Setting IOLOCK prevents writes to the control registers; clearing IOLOCK allows writes.

To set or clear IOLOCK, a specific command sequence must be executed:

1. Write 0x46 to OSCCON<7:0>.
2. Write 0x57 to OSCCON<7:0>.
3. Clear (or set) IOLOCK as a single operation.

Note: MPLAB® C30 provides built-in C language functions for unlocking the OSCCON register:

```
__builtin_write_OSCCONL(value)
__builtin_write_OSCCONH(value)
```

See MPLAB Help for more information.

Unlike the similar sequence with the oscillator's LOCK bit, IOLOCK remains in one state until changed. This allows all of the peripheral pin selects to be configured with a single unlock sequence followed by an update to all control registers, then locked with a second lock sequence.

10.6.3.2 Continuous State Monitoring

In addition to being protected from direct writes, the contents of the RPINRx and RPORx registers are constantly monitored in hardware by shadow registers. If an unexpected change in any of the registers occurs (such as cell disturbances caused by ESD or other external events), a configuration mismatch Reset will be triggered.

10.6.3.3 Configuration Bit Pin Select Lock

As an additional level of safety, the device can be configured to prevent more than one write session to the RPINRx and RPORx registers. The IOL1WAY (FOSC<IOL1WAY>) configuration bit blocks the IOLOCK bit from being cleared after it has been set once. If IOLOCK remains set, the register unlock procedure will not execute, and the peripheral pin select control registers cannot be written to. The only way to clear the bit and re-enable peripheral remapping is to perform a device Reset.

In the default (unprogrammed) state, IOL1WAY is set, restricting users to one write session. Programming IOL1WAY allows user applications unlimited access (with the proper use of the unlock sequence) to the peripheral pin select registers.

© 2007-2012 Microchip Technology Inc.

10.7 I/O Helpful Tips

1. In some cases, certain pins as defined in **TABLE 24-9: "DC Characteristics: I/O Pin Input Specifications"** under "Injection Current", have internal protection diodes to VDD and VSS. The term "Injection Current" is also referred to as "Clamp Current". On designated pins, with sufficient external current limiting precautions by the user, I/O pin input voltages are allowed to be greater or less than the data sheet absolute maximum ratings with nominal VDD with respect to the VSS and VDD supplies. Note that when the user application forward biases either of the high or low side internal input clamp diodes, that the resulting current being injected into the device that is clamped internally by the VDD and VSS power rails, may affect the ADC accuracy by four to six counts.
2. I/O pins that are shared with any analog input pin, (i.e., ANx), are always analog pins by default after any reset. Consequently, any pin(s) configured as an analog input pin, automatically disables the digital input pin buffer. As such, any attempt to read a digital input pin will always return a '0' regardless of the digital logic level on the pin if the analog pin is configured. To use a pin as a digital I/O pin on a shared ANx pin, the user application needs to configure the analog pin configuration registers in the ADC module, (i.e., ADxPCFGL, AD1PCFGH), by setting the appropriate bit that corresponds to that I/O port pin to a '1'. On devices with more than one ADC, both analog pin configurations for both ADC modules must be configured as a digital I/O pin for that pin to function as a digital I/O pin.

Note:	Although it is not possible to use a digital input pin when its analog function is enabled, it is possible to use the digital I/O output function, TRISx = 0x0, while the analog function is also enabled. However, this is not recommended, particularly if the analog input is connected to an external analog voltage source, which would create signal contention between the analog signal and the output pin driver.

3. Most I/O pins have multiple functions. Referring to the device pin diagrams in the data sheet, the priorities of the functions allocated to any pins are indicated by reading the pin name from left-to-right. The left most function name takes precedence over any function to its right in the naming convention. For example: AN16/T2CK/T7CK/RC1. This indicates that AN16 is the highest priority in this example and will supersede all other functions to its right in the list. Those other functions to its right, even if enabled, would not work as long as any other function to its left was enabled. This rule applies to all of the functions listed for a given pin.
4. Each CN pin has a configurable internal weak pull-up resistor. The pull-ups act as a current source connected to the pin, and eliminates the need for external resistors in certain applications. The internal pull-up is to ~(VDD-0.8) not VDD. This is still above the minimum VIH of CMOS and TTL devices.
5. When driving LEDs directly, the I/O pin can source or sink more current than what is specified in the VOH/IOH and VOL/IOL DC characteristic specification. The respective IOH and IOL current rating only applies to maintaining the corresponding output at or above the VOH and at or below the VOL levels. However, for LEDs unlike digital inputs of an externally connected device, they are not governed by the same minimum VIH/VIL levels. An I/O pin output can safely sink or source any current less than that listed in the absolute maximum rating section of the data sheet. For example:

   VOH = 2.4v @ IOH = -8 mA and VDD = 3.3V

   The maximum output current sourced by any 8 mA I/O pin = 12 mA.

   LED source current < 12 mA is technically permitted. Refer to the VOH/IOH graphs in **Section 24.0 "Electrical Characteristics"** for additional information.

10.8 I/O Resources

Many useful resources are provided on the main product page of the Microchip web site for the devices listed in this data sheet. This product page, which can be accessed using this link, contains the latest updates and additional information.

Note:	In the event you are not able to access the product page using the link above, enter this URL in your browser: http://www.microchip.com/wwwproducts/Devices.aspx?dDocName=en530334

10.8.1 KEY RESOURCES

- **Section 10. "I/O Ports"** (DS70193)
- Code Samples
- Application Notes
- Software Libraries
- Webinars
- All related dsPIC33F/PIC24H Family Reference Manuals Sections
- Development Tools

10.9 Peripheral Pin Select Registers

The dsPIC33FJ32MC202/204 and dsPIC33FJ16MC304 family of devices implement 21 registers for remappable peripheral configuration:

- Input Remappable Peripheral Registers (13)
- Output Remappable Peripheral Registers (8)

Note: Input and Output Register values can only be changed if OSCCON[IOLOCK] = 0. See **Section 10.6.3.1 "Control Register Lock"** for a specific command sequence.

REGISTER 10-1: RPINR0: PERIPHERAL PIN SELECT INPUT REGISTER 0

U-0	U-0	U-0	R/W-1	R/W-1	R/W-1	R/W-1	R/W-1
—	—	—	INT1R<4:0>				
bit 15							bit 8

U-0	U-0	U-0	U-0	U-0	U-0	U-0	U-0
—	—	—	—	—	—	—	—
bit 7							bit 0

Legend:			
R = Readable bit	W = Writable bit	U = Unimplemented bit, read as '0'	
-n = Value at POR	'1' = Bit is set	'0' = Bit is cleared	x = Bit is unknown

bit 15-13 **Unimplemented:** Read as '0'

bit 12-8 **INT1R<4:0>:** Assign External Interrupt 1 (INTR1) to the corresponding RPn pin bits
11111 = Input tied Vss
11001 = Input tied to RP25
.
.
.
00001 = Input tied to RP1
00000 = Input tied to RP0

bit 7-0 **Unimplemented:** Read as '0'

© 2007-2012 Microchip Technology Inc.

REGISTER 10-2: RPINR1: PERIPHERAL PIN SELECT INPUT REGISTER 1

U-0	U-0	U-0	U-0	U-0	U-0	U-0	U-0
—	—	—	—	—	—	—	—
bit 15							bit 8

U-0	U-0	U-0	R/W-1	R/W-1	R/W-1	R/W-1	R/W-1
—	—	—	INT2R<4:0>				
bit 7							bit 0

Legend:			
R = Readable bit	W = Writable bit	U = Unimplemented bit, read as '0'	
-n = Value at POR	'1' = Bit is set	'0' = Bit is cleared	x = Bit is unknown

bit 15-5 **Unimplemented:** Read as '0'

bit 4-0 **INT2R<4:0>:** Assign External Interrupt 2 (INTR2) to the corresponding RPn pin bits

11111 = Input tied Vss
11001 = Input tied to RP25
.
.
.
00001 = Input tied to RP1
00000 = Input tied to RP0

REGISTER 10-3: RPINR3: PERIPHERAL PIN SELECT INPUT REGISTER 3

U-0	U-0	U-0	R/W-1	R/W-1	R/W-1	R/W-1	R/W-1
—	—	—	T3CKR<4:0>				
bit 15							bit 8

U-0	U-0	U-0	R/W-1	R/W-1	R/W-1	R/W-1	R/W-1
—	—	—	T2CKR<4:0>				
bit 7							bit 0

Legend:			
R = Readable bit	W = Writable bit	U = Unimplemented bit, read as '0'	
-n = Value at POR	'1' = Bit is set	'0' = Bit is cleared	x = Bit is unknown

bit 15-13 **Unimplemented:** Read as '0'

bit 12-8 **T3CKR<4:0>:** Assign Timer3 External Clock (T3CK) to the corresponding RPn pin bits

11111 = Input tied Vss
11001 = Input tied to RP25
.
.
.
00001 = Input tied to RP1
00000 = Input tied to RP0

bit 7-5 **Unimplemented:** Read as '0'

bit 4-0 **T2CKR<4:0>:** Assign Timer2 External Clock (T2CK) to the corresponding RPn pin bits

11111 = Input tied Vss
11001 = Input tied to RP25
.
.
.
00001 = Input tied to RP1
00000 = Input tied to RP0

© 2007-2012 Microchip Technology Inc.

REGISTER 10-4: RPINR7: PERIPHERAL PIN SELECT INPUT REGISTER 7

U-0	U-0	U-0	R/W-1	R/W-1	R/W-1	R/W-1	R/W-1
—	—	—	IC2R<4:0>				
bit 15							bit 8

U-0	U-0	U-0	R/W-1	R/W-1	R/W-1	R/W-1	R/W-1
—	—	—	IC1R<4:0>				
bit 7							bit 0

Legend:			
R = Readable bit	W = Writable bit	U = Unimplemented bit, read as '0'	
-n = Value at POR	'1' = Bit is set	'0' = Bit is cleared	x = Bit is unknown

bit 15-13 **Unimplemented:** Read as '0'

bit 12-8 **IC2R<4:0>:** Assign Input Capture 2 (IC2) to the corresponding RPn pin bits
11111 = Input tied Vss
11001 = Input tied to RP25
.
.
.
00001 = Input tied to RP1
00000 = Input tied to RP0

bit 7-5 **Unimplemented:** Read as '0'

bit 4-0 **IC1R<4:0>:** Assign Input Capture 1 (IC1) to the corresponding RPn pin bits
11111 = Input tied Vss
11001 = Input tied to RP25
.
.
.
00001 = Input tied to RP1
00000 = Input tied to RP0

REGISTER 10-5: RPINR10: PERIPHERAL PIN SELECT INPUT REGISTER 10

U-0	U-0	U-0	R/W-1	R/W-1	R/W-1	R/W-1	R/W-1
—	—	—	IC8R<4:0>				
bit 15							bit 8

U-0	U-0	U-0	R/W-1	R/W-1	R/W-1	R/W-1	R/W-1
—	—	—	IC7R<4:0>				
bit 7							bit 0

Legend:			
R = Readable bit	W = Writable bit	U = Unimplemented bit, read as '0'	
-n = Value at POR	'1' = Bit is set	'0' = Bit is cleared	x = Bit is unknown

bit 15-13 **Unimplemented:** Read as '0'

bit 12-8 **IC8R<4:0>:** Assign Input Capture 8 (IC8) to the corresponding pin RPn pin bits

11111 = Input tied Vss
11001 = Input tied to RP25
.
.
.
00001 = Input tied to RP1
00000 = Input tied to RP0

bit 7-5 **Unimplemented:** Read as '0'

bit 4-0 **IC7R<4:0>:** Assign Input Capture 7 (IC7) to the corresponding pin RPn pin bits

11111 = Input tied Vss
11001 = Input tied to RP25
.
.
.
00001 = Input tied to RP1
00000 = Input tied to RP0

© 2007-2012 Microchip Technology Inc.

REGISTER 10-6: RPINR11: PERIPHERAL PIN SELECT INPUT REGISTER 11

U-0	U-0	U-0	U-0	U-0	U-0	U-0	U-0
—	—	—	—	—	—	—	—
bit 15							bit 8

U-0	U-0	U-0	R/W-1	R/W-1	R/W-1	R/W-1	R/W-1
—	—	—	OCFAR<4:0>				
bit 7							bit 0

Legend:			
R = Readable bit	W = Writable bit	U = Unimplemented bit, read as ‘0’	
-n = Value at POR	‘1’ = Bit is set	‘0’ = Bit is cleared	x = Bit is unknown

bit 15-5 **Unimplemented:** Read as ‘0’

bit 4-0 **OCFAR<4:0>:** Assign Output Capture A (OCFA) to the corresponding RPn pin bits

11111 = Input tied Vss
11001 = Input tied to RP25
.
.
.
00001 = Input tied to RP1
00000 = Input tied to RP0

REGISTER 10-7: RPINR12: PERIPHERAL PIN SELECT INPUT REGISTER 12

U-0	U-0	U-0	U-0	U-0	U-0	U-0	U-0
—	—	—	—	—	—	—	—
bit 15							bit 8

U-0	U-0	U-0	R/W-1	R/W-1	R/W-1	R/W-1	R/W-1
—	—	—	FLTA1R<4:0>				
bit 7							bit 0

Legend:			
R = Readable bit	W = Writable bit	U = Unimplemented bit, read as ‘0’	
-n = Value at POR	‘1’ = Bit is set	‘0’ = Bit is cleared	x = Bit is unknown

bit 15-5 **Unimplemented:** Read as ‘0’

bit 4-0 **FLTA1R<4:0>:** Assign PWM1 Fault ($\overline{\text{FLTA1}}$) to the corresponding RPn pin bits

11111 = Input tied Vss
11001 = Input tied to RP25
.
.
.
00001 = Input tied to RP1
00000 = Input tied to RP0

REGISTER 10-8: RPINR13: PERIPHERAL PIN SELECT INPUT REGISTER 13

U-0	U-0	U-0	U-0	U-0	U-0	U-0	U-0
—	—	—	—	—	—	—	—
bit 15							bit 8

U-0	U-0	U-0	R/W-1	R/W-1	R/W-1	R/W-1	R/W-1
—	—	—	FLTA2R<4:0>				
bit 7							bit 0

Legend:			
R = Readable bit	W = Writable bit	U = Unimplemented bit, read as '0'	
-n = Value at POR	'1' = Bit is set	'0' = Bit is cleared	x = Bit is unknown

bit 15-5 **Unimplemented:** Read as '0'

bit 4-0 **FLTA2R<4:0>:** Assign PWM2 Fault ($\overline{\text{FLTA2}}$) to the corresponding RPn pin bits

11111 = Input tied Vss
11001 = Input tied to RP25
.
.
.
00001 = Input tied to RP1
00000 = Input tied to RP0

© 2007-2012 Microchip Technology Inc.

REGISTER 10-9: RPINR14: PERIPHERAL PIN SELECT OUTPUT REGISTER 14

U-0	U-0	U-0	R/W-1	R/W-1	R/W-1	R/W-1	R/W-1
—	—	—	QEB1R<4:0>				
bit 15							bit 8

U-0	U-0	U-0	R/W-1	R/W-1	R/W-1	R/W-1	R/W-1
—	—	—	QEA1R<4:0>				
bit 7							bit 0

Legend:			
R = Readable bit	W = Writable bit	U = Unimplemented bit, read as '0'	
-n = Value at POR	'1' = Bit is set	'0' = Bit is cleared	x = Bit is unknown

bit 15-13 **Unimplemented:** Read as '0'

bit 12-8 **QEB1R<4:0>:** Assign B (QEB) to the corresponding pin bits
11111 = Input tied Vss
11001 = Input tied to RP25
.
.
.
00001 = Input tied to RP1
00000 = Input tied to RP0

bit 7-5 **Unimplemented:** Read as '0'

bit 4-0 **QEA1R<4:0>:** Assign A(QEA) to the corresponding pin bits
11111 = Input tied Vss
11001 = Input tied to RP25
.
.
.
00001 = Input tied to RP1
00000 = Input tied to RP0

REGISTER 10-10: RPINR15: PERIPHERAL PIN SELECT INPUT REGISTER 15

U-0	U-0	U-0	U-0	U-0	U-0	U-0	U-0
—	—	—	—	—	—	—	—
bit 15							bit 8

U-0	U-0	U-0	R/W-1	R/W-1	R/W-1	R/W-1	R/W-1
—	—	—	INDX1R<4:0>				
bit 7							bit 0

Legend:			
R = Readable bit	W = Writable bit	U = Unimplemented bit, read as '0'	
-n = Value at POR	'1' = Bit is set	'0' = Bit is cleared	x = Bit is unknown

bit 15-5 **Unimplemented:** Read as '0'

bit 4-0 **INDX1R<4:0>:** Assign QEI INDEX (INDX) to the corresponding RPn pin bits

11111 = Input tied Vss
11001 = Input tied to RP25
.
.
.
00001 = Input tied to RP1
00000 = Input tied to RP0

© 2007-2012 Microchip Technology Inc.

REGISTER 10-11: RPINR18: PERIPHERAL PIN SELECT INPUT REGISTER 18

U-0	U-0	U-0	R/W-1	R/W-1	R/W-1	R/W-1	R/W-1
—	—	—	U1CTSR<4:0>				
bit 15							bit 8

U-0	U-0	U-0	R/W-1	R/W-1	R/W-1	R/W-1	R/W-1
—	—	—	U1RXR<4:0>				
bit 7							bit 0

Legend:			
R = Readable bit	W = Writable bit	U = Unimplemented bit, read as '0'	
-n = Value at POR	'1' = Bit is set	'0' = Bit is cleared	x = Bit is unknown

bit 15-13 **Unimplemented:** Read as '0'

bit 12-8 **U1CTSR<4:0>:** Assign UART1 Clear to Send ($\overline{\text{U1CTS}}$) to the corresponding RPn pin bits

11111 = Input tied Vss
11001 = Input tied to RP25
.
.
.
00001 = Input tied to RP1
00000 = Input tied to RP0

bit 7-5 **Unimplemented:** Read as '0'

bit 4-0 **U1RXR<4:0>:** Assign UART1 Receive (U1RX) to the corresponding RPn pin bits

11111 = Input tied Vss
11001 = Input tied to RP25
.
.
.
00001 = Input tied to RP1
00000 = Input tied to RP0

REGISTER 10-12: RPINR20: PERIPHERAL PIN SELECT INPUT REGISTER 20

U-0	U-0	U-0	R/W-1	R/W-1	R/W-1	R/W-1	R/W-1
—	—	—	SCK1R<4:0>				
bit 15							bit 8

U-0	U-0	U-0	R/W-1	R/W-1	R/W-1	R/W-1	R/W-1
—	—	—	SDI1R<4:0>				
bit 7							bit 0

Legend:			
R = Readable bit	W = Writable bit	U = Unimplemented bit, read as '0'	
-n = Value at POR	'1' = Bit is set	'0' = Bit is cleared	x = Bit is unknown

bit 15-13 **Unimplemented:** Read as '0'

bit 12-8 **SCK1R<4:0>:** Assign SPI1 Clock Input (SCK1IN) to the corresponding RPn pin bits

11111 = Input tied Vss
11001 = Input tied to RP25
.
.
.
00001 = Input tied to RP1
00000 = Input tied to RP0

bit 7-5 **Unimplemented:** Read as '0'

bit 4-0 **SDI1R<4:0>:** Assign SPI1 Data Input (SDI1) to the corresponding RPn pin bits

11111 = Input tied Vss
11001 = Input tied to RP25
.
.
.
00001 = Input tied to RP1
00000 = Input tied to RP0

© 2007-2012 Microchip Technology Inc.

REGISTER 10-13: RPINR21: PERIPHERAL PIN SELECT INPUT REGISTER 21

U-0	U-0	U-0	U-0	U-0	U-0	U-0	U-0
—	—	—	—	—	—	—	—
bit 15							bit 8

U-0	U-0	U-0	R/W-1	R/W-1	R/W-1	R/W-1	R/W-1
—	—	—	SS1R<4:0>				
bit 7							bit 0

Legend:			
R = Readable bit	W = Writable bit	U = Unimplemented bit, read as '0'	
-n = Value at POR	'1' = Bit is set	'0' = Bit is cleared	x = Bit is unknown

bit 15-5 **Unimplemented:** Read as '0'

bit 4-0 **SS1R<4:0>:** Assign SPI1 Slave Select Input (SS1IN) to the corresponding RPn pin bits

11111 = Input tied Vss
11001 = Input tied to RP25
.
.
.
00001 = Input tied to RP1
00000 = Input tied to RP0

REGISTER 10-14: RPOR0: PERIPHERAL PIN SELECT OUTPUT REGISTER 0

U-0	U-0	U-0	R/W-0	R/W-0	R/W-0	R/W-0	R/W-0
—	—	—	RP1R<4:0>				
bit 15							bit 8

U-0	U-0	U-0	R/W-0	R/W-0	R/W-0	R/W-0	R/W-0
—	—	—	RP0R<4:0>				
bit 7							bit 0

Legend:			
R = Readable bit	W = Writable bit	U = Unimplemented bit, read as '0'	
-n = Value at POR	'1' = Bit is set	'0' = Bit is cleared	x = Bit is unknown

bit 15-13 **Unimplemented:** Read as '0'

bit 12-8 **RP1R<4:0>:** Peripheral Output Function is Assigned to RP1 Output Pin bits (see Table 10-2 for peripheral function numbers)

bit 7-5 **Unimplemented:** Read as '0'

bit 4-0 **RP0R<4:0>:** Peripheral Output Function is Assigned to RP0 Output Pin bits (see Table 10-2 for peripheral function numbers)

REGISTER 10-15: RPOR1: PERIPHERAL PIN SELECT OUTPUT REGISTER 1

U-0	U-0	U-0	R/W-0	R/W-0	R/W-0	R/W-0	R/W-0
—	—	—	RP3R<4:0>				
bit 15							bit 8

U-0	U-0	U-0	R/W-0	R/W-0	R/W-0	R/W-0	R/W-0
—	—	—	RP2R<4:0>				
bit 7							bit 0

Legend:			
R = Readable bit	W = Writable bit	U = Unimplemented bit, read as '0'	
-n = Value at POR	'1' = Bit is set	'0' = Bit is cleared	x = Bit is unknown

bit 15-13 **Unimplemented:** Read as '0'

bit 12-8 **RP3R<4:0>:** Peripheral Output Function is Assigned to RP3 Output Pin bits (see Table 10-2 for peripheral function numbers)

bit 7-5 **Unimplemented:** Read as '0'

bit 4-0 **RP2R<4:0>:** Peripheral Output Function is Assigned to RP2 Output Pin bits (see Table 10-2 for peripheral function numbers)

© 2007-2012 Microchip Technology Inc.

REGISTER 10-16: RPOR2: PERIPHERAL PIN SELECT OUTPUT REGISTER 2

U-0	U-0	U-0	R/W-0	R/W-0	R/W-0	R/W-0	R/W-0
—	—	—	RP5R<4:0>				
bit 15							bit 8

U-0	U-0	U-0	R/W-0	R/W-0	R/W-0	R/W-0	R/W-0
—	—	—	RP4R<4:0>				
bit 7							bit 0

Legend:			
R = Readable bit	W = Writable bit	U = Unimplemented bit, read as '0'	
-n = Value at POR	'1' = Bit is set	'0' = Bit is cleared	x = Bit is unknown

bit 15-13 **Unimplemented:** Read as '0'

bit 12-8 **RP5R<4:0>:** Peripheral Output Function is Assigned to RP5 Output Pin bits (see Table 10-2 for peripheral function numbers)

bit 7-5 **Unimplemented:** Read as '0'

bit 4-0 **RP4R<4:0>:** Peripheral Output Function is Assigned to RP4 Output Pin bits (see Table 10-2 for peripheral function numbers)

REGISTER 10-17: RPOR3: PERIPHERAL PIN SELECT OUTPUT REGISTER 3

U-0	U-0	U-0	R/W-0	R/W-0	R/W-0	R/W-0	R/W-0
—	—	—	RP7R<4:0>				
bit 15							bit 8

U-0	U-0	U-0	R/W-0	R/W-0	R/W-0	R/W-0	R/W-0
—	—	—	RP6R<4:0>				
bit 7							bit 0

Legend:			
R = Readable bit	W = Writable bit	U = Unimplemented bit, read as '0'	
-n = Value at POR	'1' = Bit is set	'0' = Bit is cleared	x = Bit is unknown

bit 15-13 **Unimplemented:** Read as '0'

bit 12-8 **RP7R<4:0>:** Peripheral Output Function is Assigned to RP7 Output Pin bits (see Table 10-2 for peripheral function numbers)

bit 7-5 **Unimplemented:** Read as '0'

bit 4-0 **RP6R<4:0>:** Peripheral Output Function is Assigned to RP6 Output Pin bits (see Table 10-2 for peripheral function numbers)

REGISTER 10-18: RPOR4: PERIPHERAL PIN SELECT OUTPUT REGISTER 4

U-0	U-0	U-0	R/W-0	R/W-0	R/W-0	R/W-0	R/W-0
—	—	—	RP9R<4:0>				
bit 15							bit 8

U-0	U-0	U-0	R/W-0	R/W-0	R/W-0	R/W-0	R/W-0
—	—	—	RP8R<4:0>				
bit 7							bit 0

Legend:			
R = Readable bit	W = Writable bit	U = Unimplemented bit, read as '0'	
-n = Value at POR	'1' = Bit is set	'0' = Bit is cleared	x = Bit is unknown

bit 15-13 **Unimplemented:** Read as '0'

bit 12-8 **RP9R<4:0>:** Peripheral Output Function is Assigned to RP9 Output Pin bits (see Table 10-2 for peripheral function numbers)

bit 7-5 **Unimplemented:** Read as '0'

bit 4-0 **RP8R<4:0>:** Peripheral Output Function is Assigned to RP8 Output Pin bits (see Table 10-2 for peripheral function numbers)

REGISTER 10-19: RPOR5: PERIPHERAL PIN SELECT OUTPUT REGISTER 5

U-0	U-0	U-0	R/W-0	R/W-0	R/W-0	R/W-0	R/W-0
—	—	—	RP11R<4:0>				
bit 15							bit 8

U-0	U-0	U-0	R/W-0	R/W-0	R/W-0	R/W-0	R/W-0
—	—	—	RP10R<4:0>				
bit 7							bit 0

Legend:			
R = Readable bit	W = Writable bit	U = Unimplemented bit, read as '0'	
-n = Value at POR	'1' = Bit is set	'0' = Bit is cleared	x = Bit is unknown

bit 15-13 **Unimplemented:** Read as '0'

bit 12-8 **RP11R<4:0>:** Peripheral Output Function is Assigned to RP11 Output Pin bits (see Table 10-2 for peripheral function numbers)

bit 7-5 **Unimplemented:** Read as '0'

bit 4-0 **RP10R<4:0>:** Peripheral Output Function is Assigned to RP10 Output Pin bits (see Table 10-2 for peripheral function numbers)

© 2007-2012 Microchip Technology Inc.

REGISTER 10-20: RPOR6: PERIPHERAL PIN SELECT OUTPUT REGISTER 6

U-0	U-0	U-0	R/W-0	R/W-0	R/W-0	R/W-0	R/W-0
—	—	—	RP13R<4:0>				
bit 15							bit 8

U-0	U-0	U-0	R/W-0	R/W-0	R/W-0	R/W-0	R/W-0
—	—	—	RP12R<4:0>				
bit 7							bit 0

Legend:			
R = Readable bit	W = Writable bit	U = Unimplemented bit, read as '0'	
-n = Value at POR	'1' = Bit is set	'0' = Bit is cleared	x = Bit is unknown

bit 15-13 **Unimplemented:** Read as '0'

bit 12-8 **RP13R<4:0>:** Peripheral Output Function is Assigned to RP13 Output Pin bits (see Table 10-2 for peripheral function numbers)

bit 7-5 **Unimplemented:** Read as '0'

bit 4-0 **RP12R<4:0>:** Peripheral Output Function is Assigned to RP12 Output Pin bits (see Table 10-2 for peripheral function numbers)

REGISTER 10-21: RPOR7: PERIPHERAL PIN SELECT OUTPUT REGISTER 7

U-0	U-0	U-0	R/W-0	R/W-0	R/W-0	R/W-0	R/W-0
—	—	—	RP15R<4:0>				
bit 15							bit 8

U-0	U-0	U-0	R/W-0	R/W-0	R/W-0	R/W-0	R/W-0
—	—	—	RP14R<4:0>				
bit 7							bit 0

Legend:			
R = Readable bit	W = Writable bit	U = Unimplemented bit, read as '0'	
-n = Value at POR	'1' = Bit is set	'0' = Bit is cleared	x = Bit is unknown

bit 15-13 **Unimplemented:** Read as '0'

bit 12-8 **RP15R<4:0>:** Peripheral Output Function is Assigned to RP15 Output Pin bits (see Table 10-2 for peripheral function numbers)

bit 7-5 **Unimplemented:** Read as '0'

bit 4-0 **RP14R<4:0>:** Peripheral Output Function is Assigned to RP14 Output Pin bits (see Table 10-2 for peripheral function numbers)

REGISTER 10-22: RPOR8: PERIPHERAL PIN SELECT OUTPUT REGISTER 8

U-0	U-0	U-0	R/W-0	R/W-0	R/W-0	R/W-0	R/W-0
—	—	—	RP17R<4:0>				
bit 15							bit 8

U-0	U-0	U-0	R/W-0	R/W-0	R/W-0	R/W-0	R/W-0
—	—	—	RP16R<4:0>				
bit 7							bit 0

Legend:			
R = Readable bit	W = Writable bit	U = Unimplemented bit, read as '0'	
-n = Value at POR	'1' = Bit is set	'0' = Bit is cleared	x = Bit is unknown

bit 15-13 **Unimplemented:** Read as '0'

bit 12-8 **RP17R<4:0>:** Peripheral Output Function is Assigned to RP17 Output Pin bits (see Table 10-2 for peripheral function numbers)

bit 7-5 **Unimplemented:** Read as '0'

bit 4-0 **RP16R<4:0>:** Peripheral Output Function is Assigned to RP16 Output Pin bits (see Table 10-2 for peripheral function numbers)

REGISTER 10-23: RPOR9: PERIPHERAL PIN SELECT OUTPUT REGISTER 9

U-0	U-0	U-0	R/W-0	R/W-0	R/W-0	R/W-0	R/W-0
—	—	—	RP19R<4:0>				
bit 15							bit 8

U-0	U-0	U-0	R/W-0	R/W-0	R/W-0	R/W-0	R/W-0
—	—	—	RP18R<4:0>				
bit 7							bit 0

Legend:			
R = Readable bit	W = Writable bit	U = Unimplemented bit, read as '0'	
-n = Value at POR	'1' = Bit is set	'0' = Bit is cleared	x = Bit is unknown

bit 15-13 **Unimplemented:** Read as '0'

bit 12-8 **RP19R<4:0>:** Peripheral Output Function is Assigned to RP19 Output Pin bits (see Table 10-2 for peripheral function numbers)

bit 7-5 **Unimplemented:** Read as '0'

bit 4-0 **RP18R<4:0>:** Peripheral Output Function is Assigned to RP18 Output Pin bits (see Table 10-2 for peripheral function numbers)

© 2007-2012 Microchip Technology Inc.

REGISTER 10-24: RPOR10: PERIPHERAL PIN SELECT OUTPUT REGISTER 10

U-0	U-0	U-0	R/W-0	R/W-0	R/W-0	R/W-0	R/W-0
—	—	—	RP21R<4:0>				
bit 15							bit 8

U-0	U-0	U-0	R/W-0	R/W-0	R/W-0	R/W-0	R/W-0
—	—	—	RP20R<4:0>				
bit 7							bit 0

Legend:			
R = Readable bit	W = Writable bit	U = Unimplemented bit, read as '0'	
-n = Value at POR	'1' = Bit is set	'0' = Bit is cleared	x = Bit is unknown

bit 15-13 **Unimplemented:** Read as '0'

bit 12-8 **RP21R<4:0>:** Peripheral Output Function is Assigned to RP21 Output Pin bits (see Table 10-2 for peripheral function numbers)

bit 7-5 **Unimplemented:** Read as '0'

bit 4-0 **RP20R<4:0>:** Peripheral Output Function is Assigned to RP20 Output Pin bits (see Table 10-2 for peripheral function numbers)

REGISTER 10-25: RPOR11: PERIPHERAL PIN SELECT OUTPUT REGISTER 11

U-0	U-0	U-0	R/W-0	R/W-0	R/W-0	R/W-0	R/W-0
—	—	—	RP23R<4:0>				
bit 15							bit 8

U-0	U-0	U-0	R/W-0	R/W-0	R/W-0	R/W-0	R/W-0
—	—	—	RP22R<4:0>				
bit 7							bit 0

Legend:			
R = Readable bit	W = Writable bit	U = Unimplemented bit, read as '0'	
-n = Value at POR	'1' = Bit is set	'0' = Bit is cleared	x = Bit is unknown

bit 15-13 **Unimplemented:** Read as '0'

bit 12-8 **RP23R<4:0>:** Peripheral Output Function is Assigned to RP23 Output Pin bits (see Table 10-2 for peripheral function numbers)

bit 7-5 **Unimplemented:** Read as '0'

bit 4-0 **RP22R<4:0>:** Peripheral Output Function is Assigned to RP22 Output Pin bits (see Table 10-2 for peripheral function numbers)

REGISTER 10-26: RPOR12: PERIPHERAL PIN SELECT OUTPUT REGISTER 12

U-0	U-0	U-0	R/W-0	R/W-0	R/W-0	R/W-0	R/W-0
—	—	—	RP25R<4:0>				
bit 15							bit 8

U-0	U-0	U-0	R/W-0	R/W-0	R/W-0	R/W-0	R/W-0
—	—	—	RP24R<4:0>				
bit 7							bit 0

Legend:			
R = Readable bit	W = Writable bit	U = Unimplemented bit, read as '0'	
-n = Value at POR	'1' = Bit is set	'0' = Bit is cleared	x = Bit is unknown

bit 15-13 **Unimplemented:** Read as '0'

bit 12-8 **RP25R<4:0>:** Peripheral Output Function is Assigned to RP25 Output Pin bits (see Table 10-2 for peripheral function numbers)

bit 7-5 **Unimplemented:** Read as '0'

bit 4-0 **RP24R<4:0>:** Peripheral Output Function is Assigned to RP24 Output Pin bits (see Table 10-2 for peripheral function numbers)

© 2007-2012 Microchip Technology Inc.

11.0 TIMER1

Note 1: This data sheet summarizes the features of the dsPIC33FJ32MC202/204 and dsPIC33FJ16MC304 family of devices. It is not intended to be a comprehensive reference source. To complement the information in this data sheet, refer to **Section 11. "Timers"** (DS70205) of the *dsPIC33F/PIC24H Family Reference Manual*, which is available from the Microchip web site (www.microchip.com).

2: Some registers and associated bits described in this section may not be available on all devices. Refer to **Section 4.0 "Memory Organization"** in this data sheet for device-specific register and bit information.

The Timer1 module is a 16-bit timer, which can serve as the time counter for the real-time clock, or operate as a free-running interval timer/counter. Timer1 can operate in three modes:

- 16-bit Timer
- 16-bit Synchronous Counter
- 16-bit Asynchronous Counter

Timer1 also supports these features:

- Timer gate operation
- Selectable prescaler settings
- Timer operation during CPU Idle and Sleep modes
- Interrupt on 16-bit Period register match or falling edge of external gate signal

Figure 11-1 presents a block diagram of the 16-bit timer module.

To configure Timer1 for operation:

1. Set the TON bit (= 1) in the T1CON register.
2. Select the timer prescaler ratio using the TCKPS<1:0> bits in the T1CON register.
3. Set the Clock and Gating modes using the TCS and TGATE bits in the T1CON register.
4. Set or clear the TSYNC bit in T1CON to select synchronous or asynchronous operation.
5. Load the timer period value into the PR1 register.
6. If interrupts are required, set the interrupt enable bit, T1IE. Use the priority bits, T1IP<2:0>, to set the interrupt priority.

FIGURE 11-1: 16-BIT TIMER1 MODULE BLOCK DIAGRAM

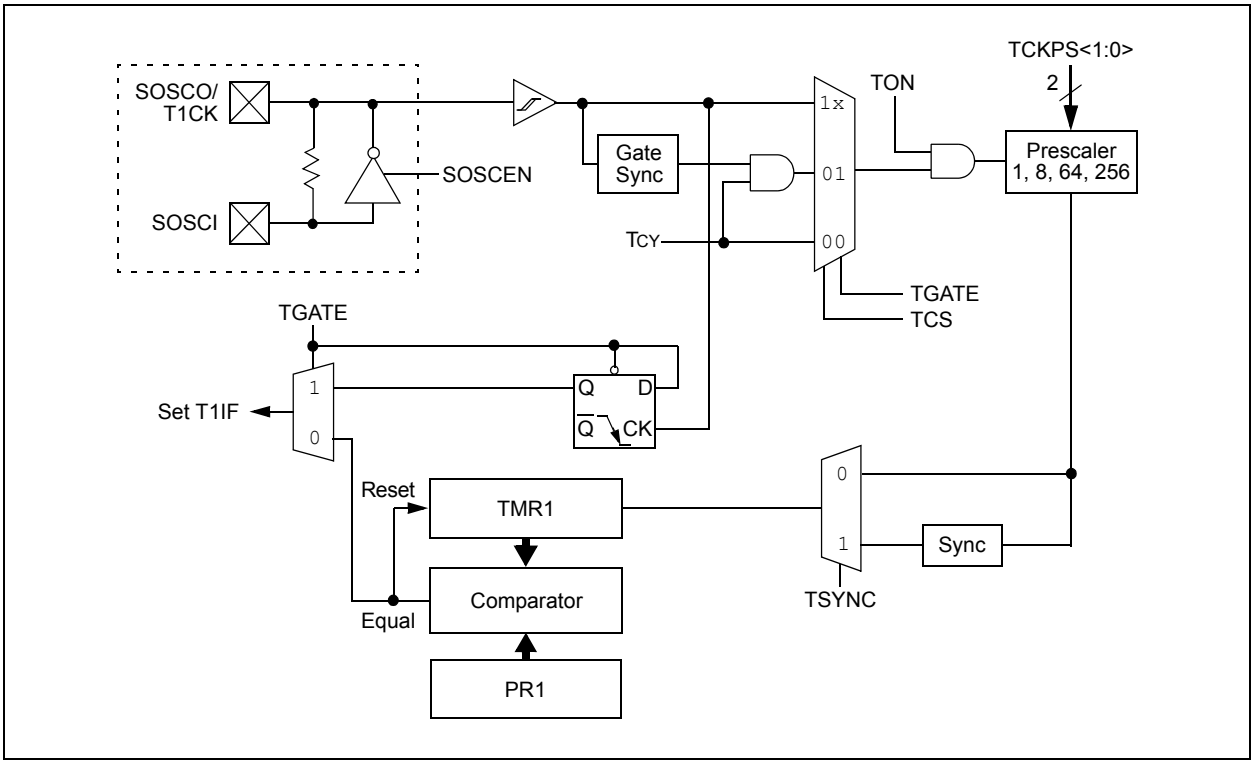

11.1 Timer Resources

Many useful resources are provided on the main product page of the Microchip web site for the devices listed in this data sheet. This product page, which can be accessed using this link, contains the latest updates and additional information.

Note:	In the event you are not able to access the product page using the link above, enter this URL in your browser: http://www.microchip.com/wwwproducts/Devices.aspx?dDocName=en530334

11.1.1 KEY RESOURCES

- **Section 11. "Timers"** (DS70205)
- Code Samples
- Application Notes
- Software Libraries
- Webinars
- All related dsPIC33F/PIC24H Family Reference Manuals Sections
- Development Tools

© 2007-2012 Microchip Technology Inc.

11.2 Timer1 Control Register

REGISTER 11-1: T1CON: TIMER1 CONTROL REGISTER

R/W-0	U-0	R/W-0	U-0	U-0	U-0	U-0	U-0
TON	—	TSIDL	—	—	—	—	—
bit 15							bit 8

U-0	R/W-0	R/W-0	R/W-0	U-0	R/W-0	R/W-0	U-0
—	TGATE	TCKPS<1:0>		—	TSYNC	TCS	—
bit 7							bit 0

Legend:			
R = Readable bit	W = Writable bit	U = Unimplemented bit, read as '0'	
-n = Value at POR	'1' = Bit is set	'0' = Bit is cleared	x = Bit is unknown

bit 15 **TON:** Timer1 On bit
1 = Starts 16-bit Timer1
0 = Stops 16-bit Timer1

bit 14 **Unimplemented:** Read as '0'

bit 13 **TSIDL:** Stop in Idle Mode bit
1 = Discontinue module operation when device enters Idle mode
0 = Continue module operation in Idle mode

bit 12-7 **Unimplemented:** Read as '0'

bit 6 **TGATE:** Timer1 Gated Time Accumulation Enable bit
When TCS = 1:
This bit is ignored.
When TCS = 0:
1 = Gated time accumulation enabled
0 = Gated time accumulation disabled

bit 5-4 **TCKPS<1:0>** Timer1 Input Clock Prescale Select bits
11 = 1:256
10 = 1:64
01 = 1:8
00 = 1:1

bit 3 **Unimplemented:** Read as '0'

bit 2 **TSYNC:** Timer1 External Clock Input Synchronization Select bit
When TCS = 1:
1 = Synchronize external clock input
0 = Do not synchronize external clock input
When TCS = 0:
This bit is ignored.

bit 1 **TCS:** Timer1 Clock Source Select bit
1 = External clock from pin T1CK (on the rising edge)
0 = Internal clock (FCY)

bit 0 **Unimplemented:** Read as '0'

NOTES:

© 2007-2012 Microchip Technology Inc.

12.0 TIMER2/3 FEATURE

Note 1: This data sheet summarizes the features of the dsPIC33FJ32MC202/204 and dsPIC33FJ16MC304 family of devices. It is not intended to be a comprehensive reference source. To complement the information in this data sheet, refer to **Section 11. "Timers"** (DS70205) of the *"dsPIC33F/PIC24H Family Reference Manual"*, which is available from the Microchip web site (www.microchip.com).

2: Some registers and associated bits described in this section may not be available on all devices. Refer to **Section 4.0 "Memory Organization"** in this data sheet for device-specific register and bit information.

The Timer2/3 feature has three 2-bit timers that can also be configured as two independent 16-bit timers with selectable operating modes.

As a 32-bit timer, the Timer2/3 feature permits operation in three modes:

- Two Independent 16-bit timers (e.g., Timer2 and Timer3) with all 16-bit operating modes (except Asynchronous Counter mode)
- Single 32-bit timer (Timer2/3)
- Single 32-bit synchronous counter (Timer2/3)

The Timer2/3 feature also supports:

- Timer gate operation
- Selectable prescaler settings
- Timer operation during Idle and Sleep modes
- Interrupt on a 32-bit period register match
- Time base for Input Capture and Output Compare modules (Timer2 and Timer3 only)
- ADC1 event trigger (Timer2/3 only)

Individually, all eight of the 16-bit timers can function as synchronous timers or counters. They also offer the features listed above, except for the event trigger. The operating modes and enabled features are determined by setting the appropriate bit(s) in the T2CON, T3CON registers. T2CON registers are shown in generic form in Register 12-1. T3CON registers are shown in Register 12-2.

For 32-bit timer/counter operation, Timer2 is the least significant word (lsw), and Timer3 is the most significant word (msw) of the 32-bit timers.

Note: For 32-bit operation, T3CON control bits are ignored. Only T2CON control bits are used for setup and control. Timer2 clock and gate inputs are used for the 32-bit timer modules, but an interrupt is generated with the Timer3 interrupt flags.

12.1 32-bit Operation

To configure the Timer2/3 feature timers for 32-bit operation:

1. Set the T32 control bit.
2. Select the prescaler ratio for Timer2 using the TCKPS<1:0> bits.
3. Set the Clock and Gating modes using the corresponding TCS and TGATE bits.
4. Load the timer period value. PR3 contains the most significant word of the value, while PR2 contains the least significant word.
5. If interrupts are required, set the interrupt enable bit, T3IE. Use the priority bits, T3IP<2:0>, to set the interrupt priority. While Timer2 controls the timer, the interrupt appears as a Timer3 interrupt.
6. Set the corresponding TON bit.

The timer value at any point is stored in the register pair, TMR3:TMR2, which always contains the most significant word of the count, while TMR2 contains the least significant word.

12.2 16-bit Operation

To configure any of the timers for individual 16-bit operation:

1. Clear the T32 bit corresponding to that timer.
2. Select the timer prescaler ratio using the TCKPS<1:0> bits.
3. Set the Clock and Gating modes using the TCS and TGATE bits.
4. Load the timer period value into the PRx register.
5. If interrupts are required, set the interrupt enable bit, TxIE. Use the priority bits, TxIP<2:0>, to set the interrupt priority.
6. Set the TON bit.

FIGURE 12-1: TIMER2/3 (32-BIT) BLOCK DIAGRAM(1)

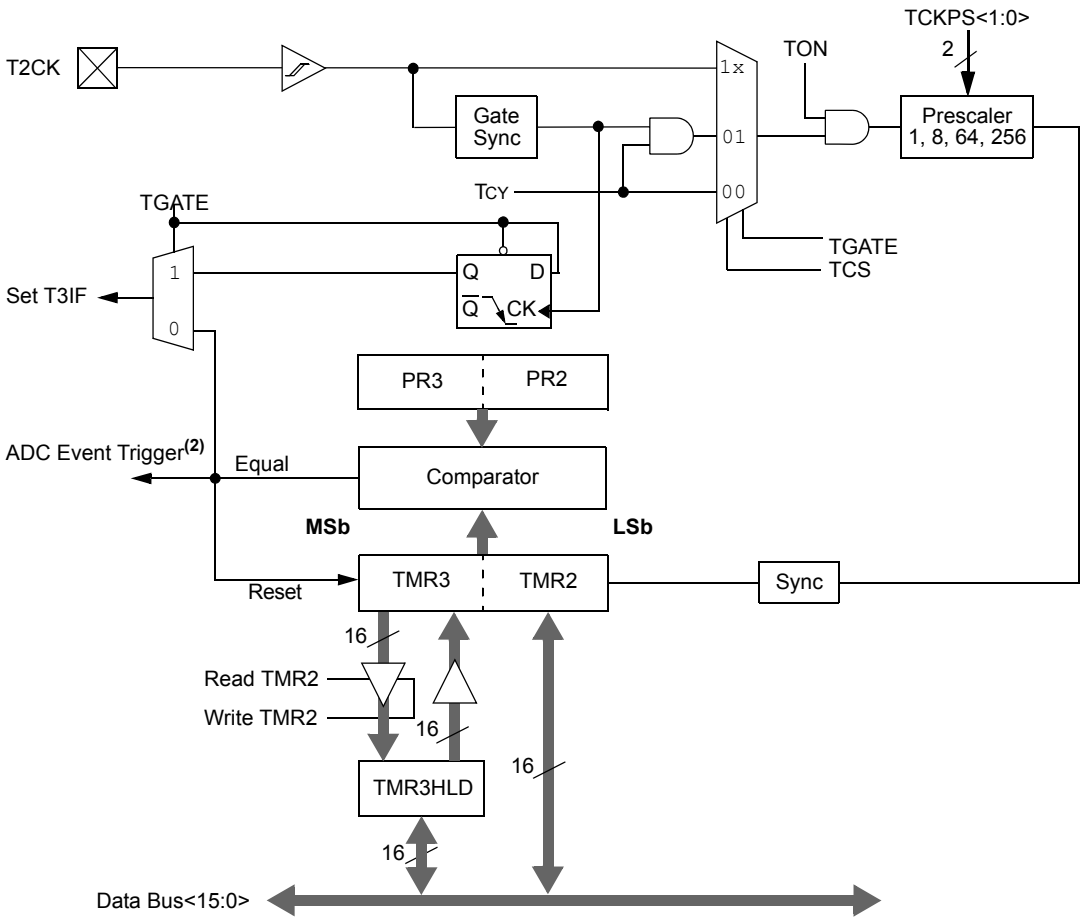

Note 1: The 32-bit timer control bit, T32, must be set for 32-bit timer/counter operation. All control bits are respective to the T2CON register.

2: The ADC event trigger is available only on Timer2/3.

FIGURE 12-2: TIMER2 (16-BIT) BLOCK DIAGRAM

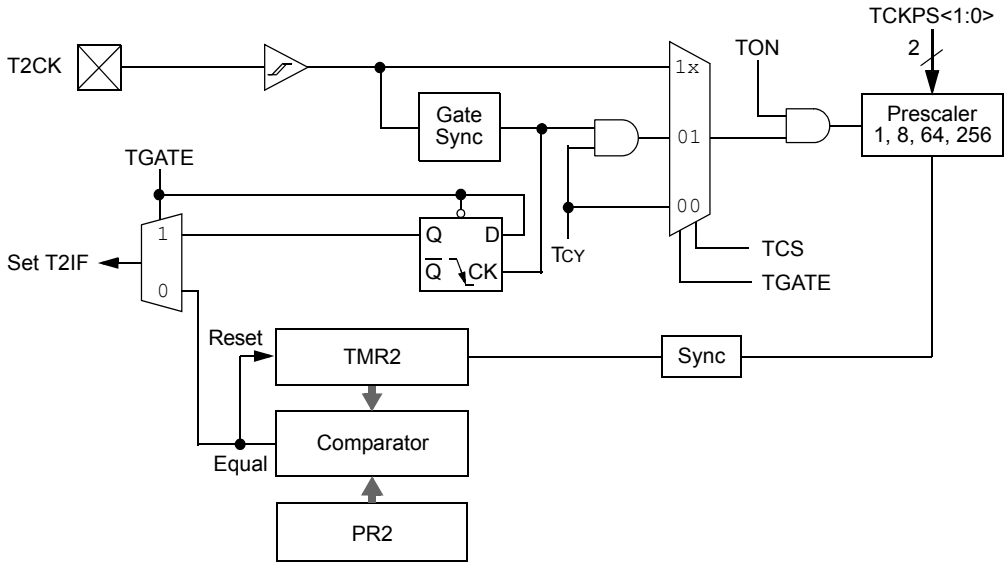

© 2007-2012 Microchip Technology Inc.

12.3 Timer2/3 Control Registers

REGISTER 12-1: T2CON CONTROL REGISTER

R/W-0	U-0	R/W-0	U-0	U-0	U-0	U-0	U-0
TON	—	TSIDL	—	—	—	—	—
bit 15							bit 8

U-0	R/W-0	R/W-0	R/W-0	R/W-0	U-0	R/W-0	U-0
—	TGATE	TCKPS<1:0>		T32	—	TCS	—
bit 7							bit 0

Legend:			
R = Readable bit	W = Writable bit	U = Unimplemented bit, read as '0'	
-n = Value at POR	'1' = Bit is set	'0' = Bit is cleared	x = Bit is unknown

bit 15 **TON:** Timer2 On bit
When T32 = 1:
1 = Starts 32-bit Timer2/3
0 = Stops 32-bit Timer2/3
When T32 = 0:
1 = Starts 16-bit Timer2
0 = Stops 16-bit Timer2

bit 14 **Unimplemented:** Read as '0'

bit 13 **TSIDL:** Stop in Idle Mode bit
1 = Discontinue module operation when device enters Idle mode
0 = Continue module operation in Idle mode

bit 12-7 **Unimplemented:** Read as '0'

bit 6 **TGATE:** Timer2 Gated Time Accumulation Enable bit
When TCS = 1:
This bit is ignored.
When TCS = 0:
1 = Gated time accumulation enabled
0 = Gated time accumulation disabled

bit 5-4 **TCKPS<1:0>:** Timer2 Input Clock Prescale Select bits
11 = 1:256
10 = 1:64
01 = 1:8
00 = 1:1

bit 3 **T32:** 32-bit Timer Mode Select bit
1 = Timer2 and Timer3 form a single 32-bit timer
0 = Timer2 and Timer3 act as two 16-bit timers

bit 2 **Unimplemented:** Read as '0'

bit 1 **TCS:** Timer2 Clock Source Select bit
1 = External clock from pin T2CK (on the rising edge)
0 = Internal clock (FCY)

bit 0 **Unimplemented:** Read as '0'

REGISTER 12-2: T3CON CONTROL REGISTER

R/W-0	U-0	R/W-0	U-0	U-0	U-0	U-0	U-0
TON(2)	—	TSIDL(1)	—	—	—	—	—
bit 15							bit 8

U-0	R/W-0	R/W-0	R/W-0	U-0	U-0	R/W-0	U-0
—	TGATE(2)	TCKPS<1:0>(2)		—	—	TCS(2)	—
bit 7							bit 0

Legend:			
R = Readable bit	W = Writable bit	U = Unimplemented bit, read as '0'	
-n = Value at POR	'1' = Bit is set	'0' = Bit is cleared	x = Bit is unknown

bit 15 **TON:** Timer3 On bit(2)
1 = Starts 16-bit Timer3
0 = Stops 16-bit Timer3

bit 14 **Unimplemented:** Read as '0'

bit 13 **TSIDL:** Stop in Idle Mode bit(1)
1 = Discontinue timer operation when device enters Idle mode
0 = Continue timer operation in Idle mode

bit 12-7 **Unimplemented:** Read as '0'

bit 6 **TGATE:** Timer3 Gated Time Accumulation Enable bit(2)
When TCS = 1:
This bit is ignored.
When TCS = 0:
1 = Gated time accumulation enabled
0 = Gated time accumulation disabled

bit 5-4 **TCKPS<1:0>:** Timer3 Input Clock Prescale Select bits(2)
11 = 1:256 prescale value
10 = 1:64 prescale value
01 = 1:8 prescale value
00 = 1:1 prescale value

bit 3-2 **Unimplemented:** Read as '0'

bit 1 **TCS:** Timer3 Clock Source Select bit(2)
1 = External clock from T3CK pin
0 = Internal clock (FOSC/2)

bit 0 **Unimplemented:** Read as '0'

Note 1: When 32-bit timer operation is enabled (T32 = 1) in the Timer Control register (T2CON<3>), the TSIDL bit must be cleared to operate the 32-bit timer in Idle mode.

2: When the 32-bit timer operation is enabled (T32 = 1) in the Timer Control register (T2CON<3>), these bits have no effect.

© 2007-2012 Microchip Technology Inc.

13.0 INPUT CAPTURE

Note 1: This data sheet summarizes the features of the dsPIC33FJ32MC202/204 and dsPIC33FJ16MC304 family of devices. It is not intended to be a comprehensive reference source. To complement the information in this data sheet, refer to **Section 12. "Input Capture"** (DS70198) of the *"dsPIC33F/PIC24H Family Reference Manual"*, which is available from the Microchip web site (www.microchip.com).

2: Some registers and associated bits described in this section may not be available on all devices. Refer to **Section 4.0 "Memory Organization"** in this data sheet for device-specific register and bit information.

The input capture module is useful in applications requiring frequency (period) and pulse measurement. The dsPIC33FJ32MC202/204 and dsPIC33FJ16MC304 devices support up to eight input capture channels.

The input capture module captures the 16-bit value of the selected Time Base register when an event occurs at the ICx pin. The events that cause a capture event are listed below in three categories:

1. Simple Capture Event modes:
   - Capture timer value on every falling edge of input at ICx pin
   - Capture timer value on every rising edge of input at ICx pin
2. Capture timer value on every edge (rising and falling).
3. Prescaler Capture Event modes:
   - Capture timer value on every 4th rising edge of input at ICx pin
   - Capture timer value on every 16th rising edge of input at ICx pin

Each input capture channel can select one of two 16-bit timers (Timer2 or Timer3) for the time base. The selected timer can use either an internal or external clock.

Other operational features include:

- Device wake-up from capture pin during CPU Sleep and Idle modes
- Interrupt on input capture event
- 4-word FIFO buffer for capture values
  - Interrupt optionally generated after 1, 2, 3 or 4 buffer locations are filled
- Use of input capture to provide additional sources of external interrupts

FIGURE 13-1: INPUT CAPTURE BLOCK DIAGRAM

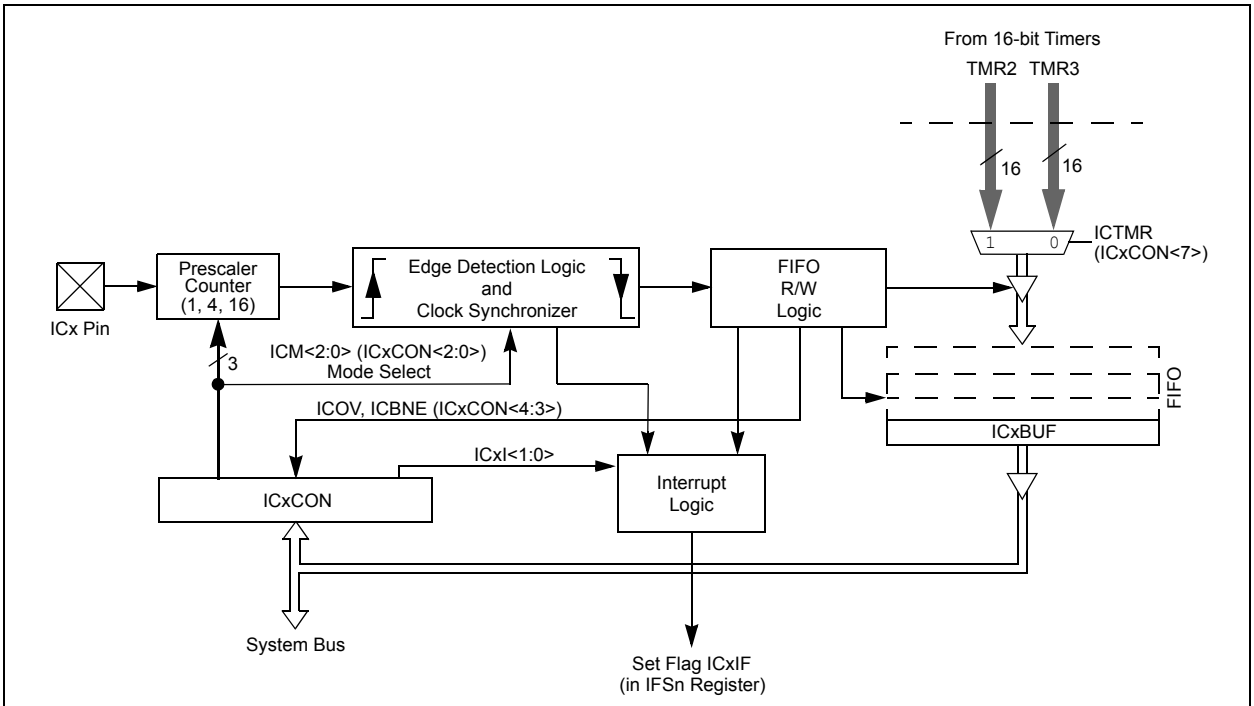

Note: An 'x' in a signal, register or bit name denotes the number of the capture channel.

13.1 Input Capture Resources

Many useful resources are provided on the main product page of the Microchip web site for the devices listed in this data sheet. This product page, which can be accessed using this link, contains the latest updates and additional information.

Note:	In the event you are not able to access the product page using the link above, enter this URL in your browser: http://www.microchip.com/wwwproducts/Devices.aspx?dDocName=en530334

13.1.1 KEY RESOURCES

- **Section 12. "Input Capture"** (DS70198)
- Code Samples
- Application Notes
- Software Libraries
- Webinars
- All related dsPIC33F/PIC24H Family Reference Manuals Sections
- Development Tools

© 2007-2012 Microchip Technology Inc.

13.2 Input Capture Registers

REGISTER 13-1: ICxCON: INPUT CAPTURE x CONTROL REGISTER

U-0	U-0	R/W-0	U-0	U-0	U-0	U-0	U-0
—	—	ICSIDL	—	—	—	—	—
bit 15							bit 8

R/W-0	R/W-0	R/W-0	R-0, HC	R-0, HC	R/W-0	R/W-0	R/W-0
ICTMR	ICI<1:0>		ICOV	ICBNE	ICM<2:0>		
bit 7							bit 0

Legend:			HC = Cleared in Hardware
R = Readable bit	W = Writable bit	U = Unimplemented bit, read as '0'	
-n = Value at POR	'1' = Bit is set	'0' = Bit is cleared	x = Bit is unknown

bit 15-14 **Unimplemented:** Read as '0'

bit 13 **ICSIDL:** Input Capture Module Stop in Idle Control bit
1 = Input capture module will halt in CPU Idle mode
0 = Input capture module will continue to operate in CPU Idle mode

bit 12-8 **Unimplemented:** Read as '0'

bit 7 **ICTMR:** Input Capture Timer Select bits
1 = TMR2 contents are captured on capture event
0 = TMR3 contents are captured on capture event

bit 6-5 **ICI<1:0>:** Select Number of Captures per Interrupt bits
11 = Interrupt on every fourth capture event
10 = Interrupt on every third capture event
01 = Interrupt on every second capture event
00 = Interrupt on every capture event

bit 4 **ICOV:** Input Capture Overflow Status Flag bit (read-only)
1 = Input capture overflow occurred
0 = No input capture overflow occurred

bit 3 **ICBNE:** Input Capture Buffer Empty Status bit (read-only)
1 = Input capture buffer is not empty, at least one more capture value can be read
0 = Input capture buffer is empty

bit 2-0 **ICM<2:0>:** Input Capture Mode Select bits
111 = Input capture functions as interrupt pin only when device is in Sleep or Idle mode
(Rising edge detect only, all other control bits are not applicable.)
110 = Unused (module disabled)
101 = Capture mode, every 16th rising edge
100 = Capture mode, every 4th rising edge
011 = Capture mode, every rising edge
010 = Capture mode, every falling edge
001 = Capture mode, every edge (rising and falling)
(ICI<1:0> bits do not control interrupt generation for this mode.)
000 = Input capture module turned off

NOTES:

© 2007-2012 Microchip Technology Inc.

14.0 OUTPUT COMPARE

Note 1: This data sheet summarizes the features of the dsPIC33FJ32MC202/204 and dsPIC33FJ16MC304 family of devices. It is not intended to be a comprehensive reference source. To complement the information in this data sheet, refer to **Section 13. "Output Compare"** (DS70209) of the *"dsPIC33F/PIC24H Family Reference Manual"*, which is available from the Microchip web site (www.microchip.com).

2: Some registers and associated bits described in this section may not be available on all devices. Refer to **Section 4.0 "Memory Organization"** in this data sheet for device-specific register and bit information.

The Output Compare module can select either Timer2 or Timer3 for its time base. The module compares the value of the timer with the value of one or two compare registers depending on the operating mode selected. The state of the output pin changes when the timer value matches the compare register value. The Output Compare module generates either a single output pulse or a sequence of output pulses, by changing the state of the output pin on the compare match events. The Output Compare module can also generate interrupts on compare match events.

The Output Compare module has multiple operating modes:

- Active-Low One-Shot mode
- Active-High One-Shot mode
- Toggle mode
- Delayed One-Shot mode
- Continuous Pulse mode
- PWM mode without fault protection
- PWM mode with fault protection

FIGURE 14-1: OUTPUT COMPARE MODULE BLOCK DIAGRAM

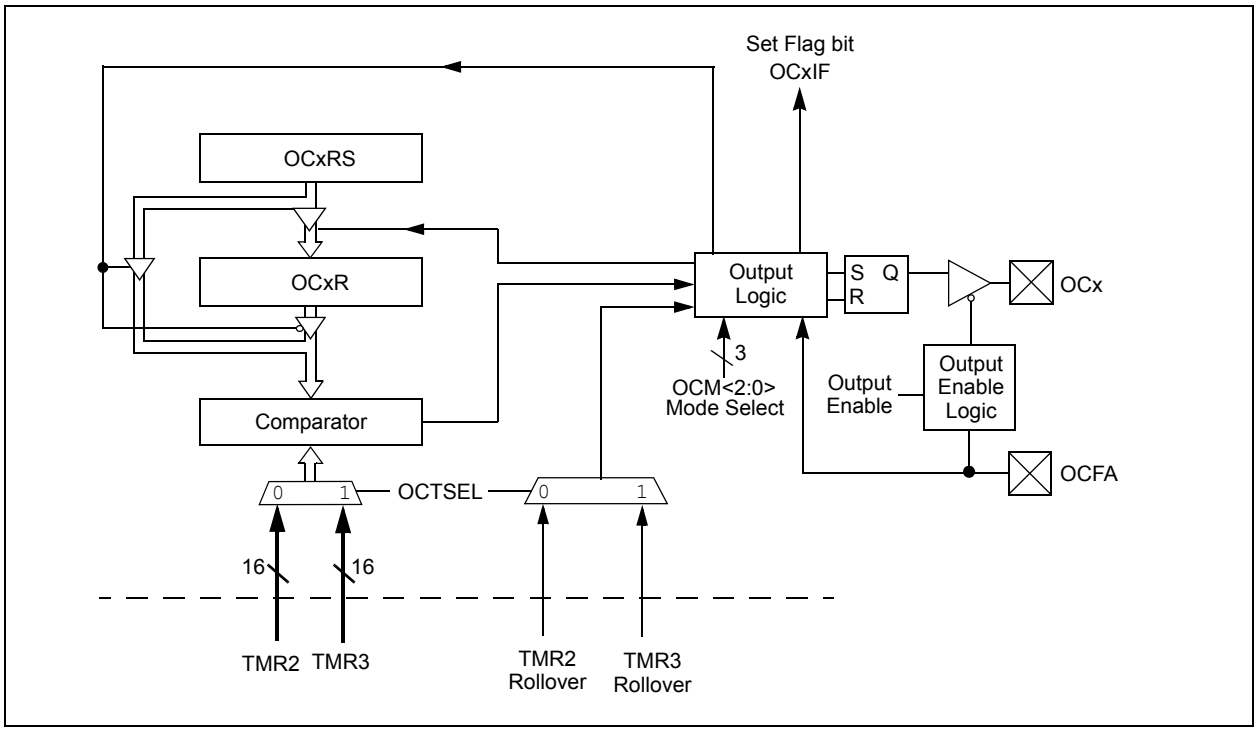

14.1 Output Compare Modes

Configure the Output Compare modes by setting the appropriate Output Compare Mode bits (OCM<2:0>) in the Output Compare Control register (OCxCON<2:0>). Table 14-1 lists the different bit settings for the Output Compare modes. Figure 14-2 illustrates the output compare operation for various modes. The user application must disable the associated timer when writing to the output compare control registers to avoid malfunctions.

Note: See **Section 13. "Output Compare"** (DS70209) in the *"dsPIC33F/PIC24H Family Reference Manual"* (DS70209) for OCxR and OCxRS register restrictions.

TABLE 14-1: OUTPUT COMPARE MODES

OCM<2:0>	Mode	OCx Pin Initial State	OCx Interrupt Generation
000	Module Disabled	Controlled by GPIO register	—
001	Active-Low One-Shot	0	OCx Rising edge
010	Active-High One-Shot	1	OCx Falling edge
011	Toggle Mode	Current output is maintained	OCx Rising and Falling edge
100	Delayed One-Shot	0	OCx Falling edge
101	Continuous Pulse mode	0	OCx Falling edge
110	PWM mode without fault protection	0, if OCxR is zero 1, if OCxR is non-zero	No interrupt
111	PWM mode with fault protection	0, if OCxR is zero 1, if OCxR is non-zero	OCFA Falling edge for OC1 to OC4

FIGURE 14-2: OUTPUT COMPARE OPERATION

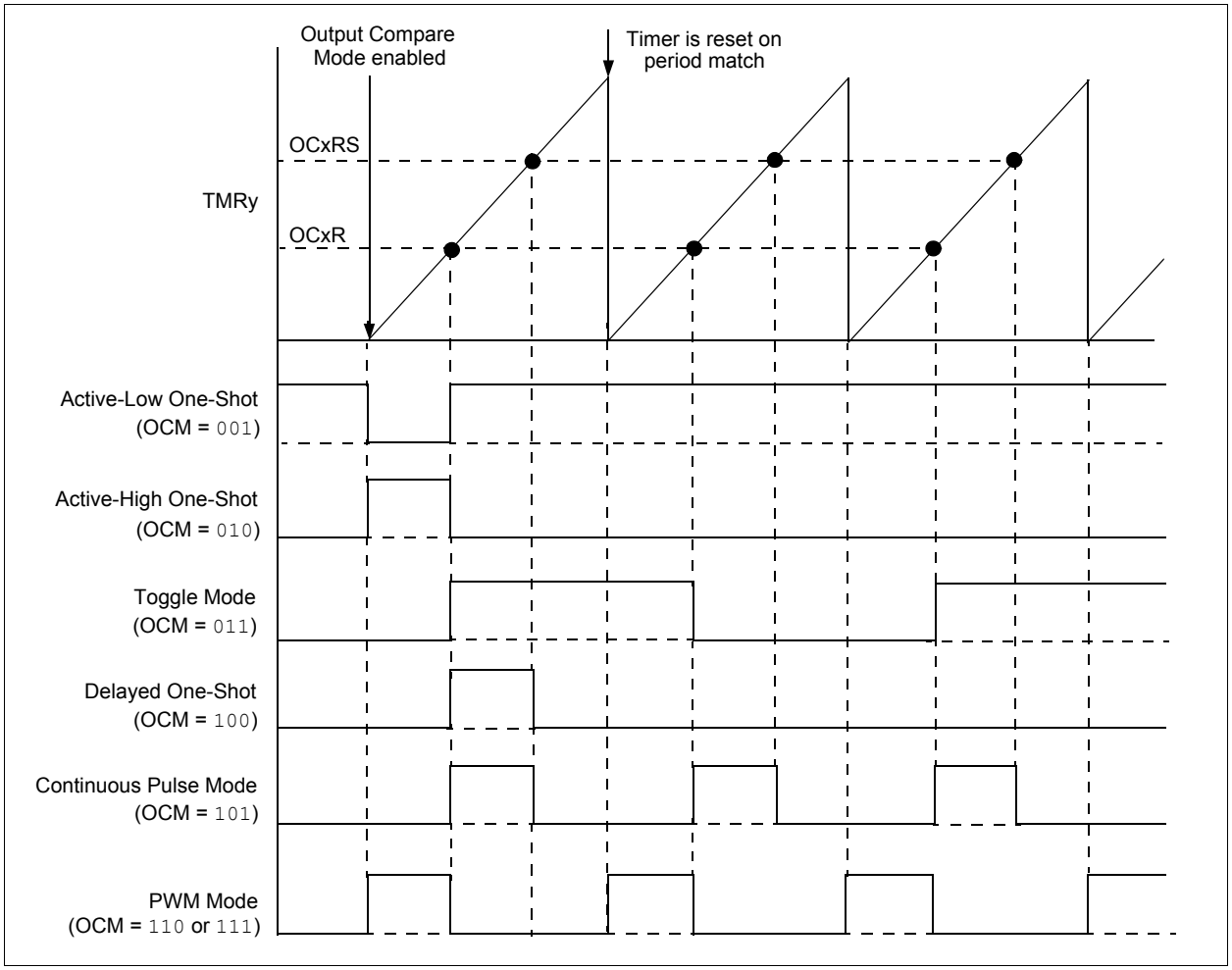

© 2007-2012 Microchip Technology Inc.

14.2 Output Compare Resources

Many useful resources are provided on the main product page of the Microchip web site for the devices listed in this data sheet. This product page, which can be accessed using this link, contains the latest updates and additional information.

Note:	In the event you are not able to access the product page using the link above, enter this URL in your browser: http://www.microchip.com/wwwproducts/Devices.aspx?dDocName=en530334

14.2.1 KEY RESOURCES

- **Section 13. "Output Compare"** (DS70209)
- Code Samples
- Application Notes
- Software Libraries
- Webinars
- All related dsPIC33F/PIC24H Family Reference Manuals Sections
- Development Tools

14.3 Output Compare Control Register

REGISTER 14-1: OCxCON: OUTPUT COMPARE x CONTROL REGISTER

U-0	U-0	R/W-0	U-0	U-0	U-0	U-0	U-0
—	—	OCSIDL	—	—	—	—	—
bit 15							bit 8

U-0	U-0	U-0	R-0 HC	R/W-0	R/W-0	R/W-0	R/W-0
—	—	—	OCFLT	OCTSEL	OCM<2:0>		
bit 7							bit 0

Legend:	HC = Cleared in Hardware	HS = Set in Hardware	
R = Readable bit	W = Writable bit	U = Unimplemented bit, read as '0'	
-n = Value at POR	'1' = Bit is set	'0' = Bit is cleared	x = Bit is unknown

bit 15-14 **Unimplemented:** Read as '0'

bit 13 **OCSIDL:** Stop Output Compare in Idle Mode Control bit
1 = Output Compare x will halt in CPU Idle mode
0 = Output Compare x will continue to operate in CPU Idle mode

bit 12-5 **Unimplemented:** Read as '0'

bit 4 **OCFLT:** PWM Fault Condition Status bit
1 = PWM Fault condition has occurred (cleared in hardware only)
0 = No PWM Fault condition has occurred
(This bit is only used when OCM<2:0> = 111.)

bit 3 **OCTSEL:** Output Compare Timer Select bit
1 = Timer3 is the clock source for Compare x
0 = Timer2 is the clock source for Compare x

bit 2-0 **OCM<2:0>:** Output Compare Mode Select bits
111 = PWM mode on OCx, Fault pin enabled
110 = PWM mode on OCx, Fault pin disabled
101 = Initialize OCx pin low, generate continuous output pulses on OCx pin
100 = Initialize OCx pin low, generate single output pulse on OCx pin
011 = Compare event toggles OCx pin
010 = Initialize OCx pin high, compare event forces OCx pin low
001 = Initialize OCx pin low, compare event forces OCx pin high
000 = Output compare channel is disabled

© 2007-2012 Microchip Technology Inc.

15.0 MOTOR CONTROL PWM MODULE

Note 1: This data sheet summarizes the features of the dsPIC33FJ32MC202/204 and dsPIC33FJ16MC304 family of devices. It is not intended to be a comprehensive reference source. To complement the information in this data sheet, refer to **Section 14. "Motor Control PWM"** (DS70187) of the *"dsPIC33F/PIC24H Family Reference Manual"*, which is available from the Microchip web site (www.microchip.com).

2: Some registers and associated bits described in this section may not be available on all devices. Refer to **Section 4.0 "Memory Organization"** in this data sheet for device-specific register and bit information.

The dsPIC33FJ32MC202/204 and dsPIC33FJ16MC304 device supports up to two dedicated Pulse-Width Modulation (PWM) modules. The PWM1 module is a 6-channel PWM generator, and the PWM2 module is a 2-channel PWM generator.

The PWM module has the following features:

- Up to 16-bit resolution.
- On-the-fly PWM frequency changes.
- Edge and Center-Aligned Output modes.
- Single Pulse Generation mode.
- Interrupt support for asymmetrical updates in Center-Aligned mode.
- Output override control for Electrically Commutative Motor (ECM) operation or BLDC.
- Special Event comparator for scheduling other peripheral events.
- Fault pins to optionally drive each of the PWM output pins to a defined state.

Duty cycle updates configurable to be immediate or synchronized to the PWM time base.

15.1 PWM1: 6-Channel PWM Module

This module simplifies the task of generating multiple synchronized PWM outputs. The following power and motion control applications are supported by the PWM module:

- 3-Phase AC Induction Motor
- Switched Reluctance (SR) Motor
- Brushless DC (BLDC) Motor
- Uninterruptible Power Supply (UPS)

This module contains three duty cycle generators, numbered 1 through 3. The module has six PWM output pins, numbered PWM1H1/PWM1L1 through PWM1H3/PWM1L3. The six I/O pins are grouped into high/low numbered pairs, denoted by the suffix H or L, respectively. For complementary loads, the low PWM pins are always the complement of the corresponding high I/O pin.

15.2 PWM2: 2-Channel PWM Module

This module provides an additional pair of complimentary PWM outputs that can be used for:

- Independent PFC correction in a motor system
- Induction cooking

This module contains a duty cycle generator that provides two PWM outputs, numbered PWM2H1/PWM2L1.

FIGURE 15-1: 6-CHANNEL PWM MODULE BLOCK DIAGRAM (PWM1)

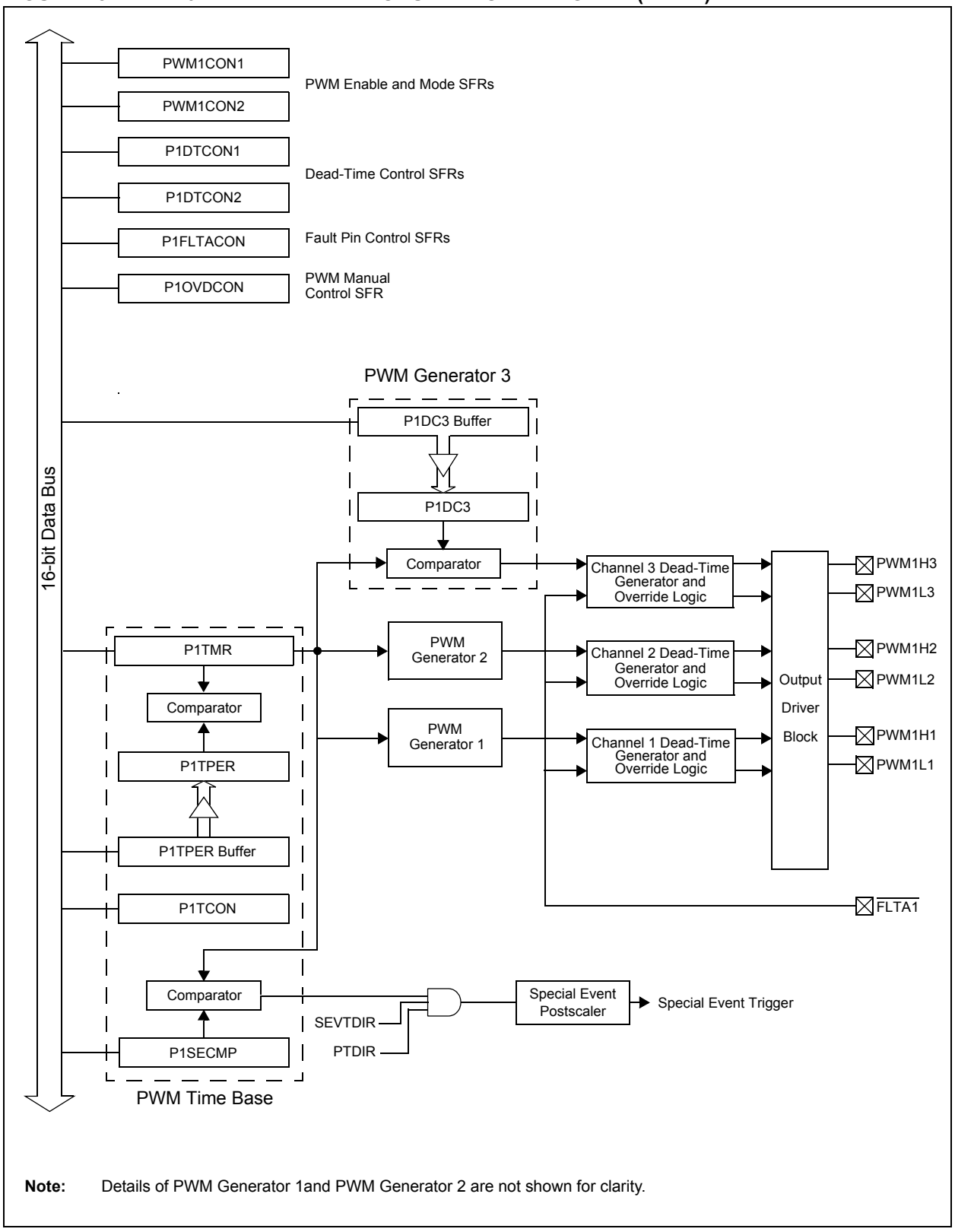

Note: Details of PWM Generator 1and PWM Generator 2 are not shown for clarity.

© 2007-2012 Microchip Technology Inc.

FIGURE 15-2: 2-CHANNEL PWM MODULE BLOCK DIAGRAM (PWM2)

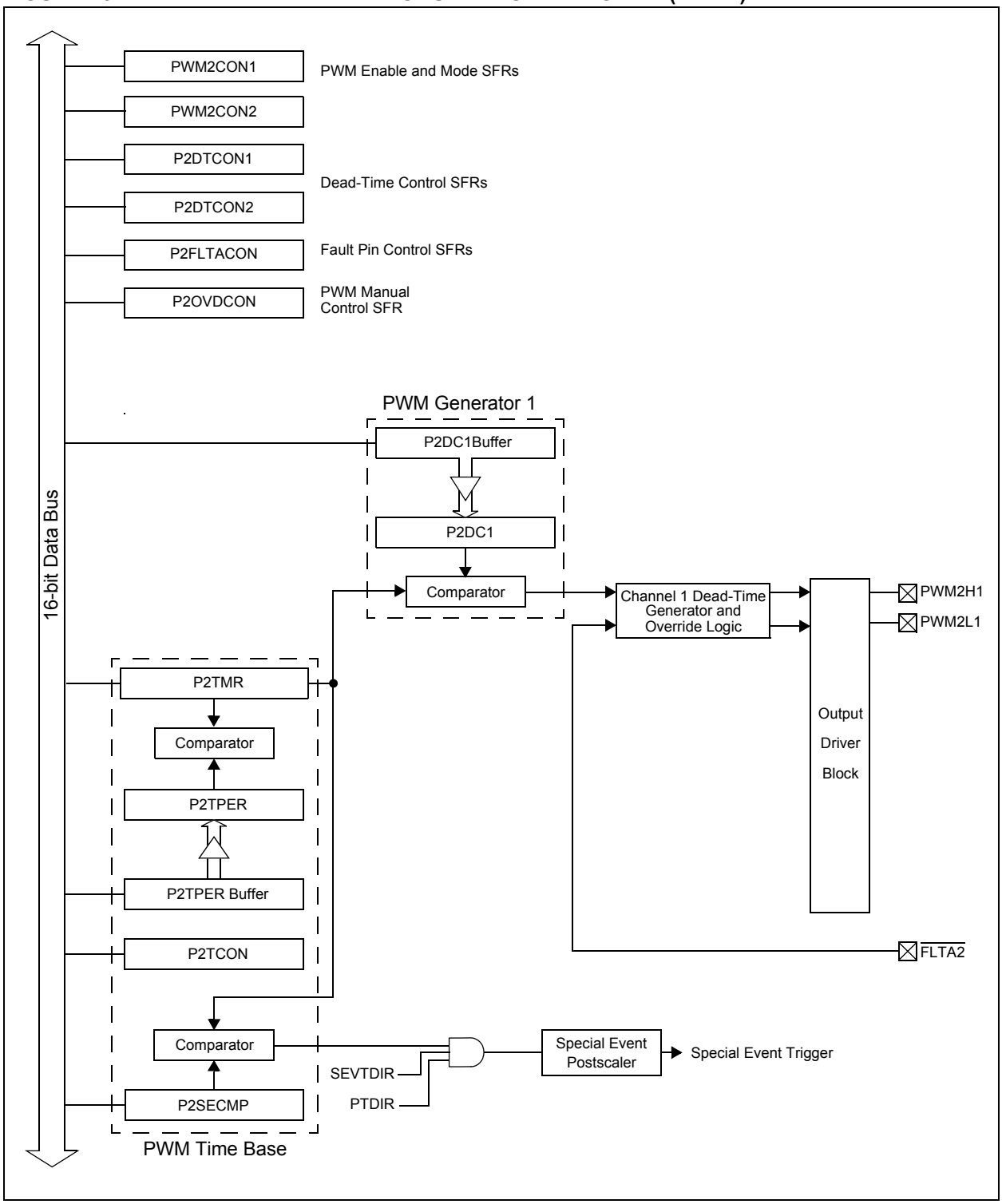

15.3 Motor Control Resources

Many useful resources are provided on the main product page of the Microchip web site for the devices listed in this data sheet. This product page, which can be accessed using this link, contains the latest updates and additional information.

Note:	In the event you are not able to access the product page using the link above, enter this URL in your browser: http://www.microchip.com/wwwproducts/Devices.aspx?dDocName=en530334

15.3.1 KEY RESOURCES

- **Section 14. "Motor Control PWM"** (DS70187)
- Code Samples
- Application Notes
- Software Libraries
- Webinars
- All related dsPIC33F/PIC24H Family Reference Manuals Sections
- Development Tools

© 2007-2012 Microchip Technology Inc.

15.4 PWM Control Registers

REGISTER 15-1: PxTCON: PWM TIME BASE CONTROL REGISTER

R/W-0	U-0	R/W-0	U-0	U-0	U-0	U-0	U-0
PTEN	—	PTSIDL	—	—	—	—	—
bit 15							bit 8

R/W-0	R/W-0	R/W-0	R/W-0	R/W-0	R/W-0	R/W-0	R/W-0
PTOPS<3:0>				PTCKPS<1:0>		PTMOD<1:0>	
bit 7							bit 0

Legend:			
R = Readable bit	W = Writable bit	U = Unimplemented bit, read as '0'	
-n = Value at POR	'1' = Bit is set	'0' = Bit is cleared	x = Bit is unknown

bit 15 **PTEN:** PWM Time Base Timer Enable bit
1 = PWM time base is on
0 = PWM time base is off

bit 14 **Unimplemented:** Read as '0'

bit 13 **PTSIDL:** PWM Time Base Stop in Idle Mode bit
1 = PWM time base halts in CPU Idle mode
0 = PWM time base runs in CPU Idle mode

bit 12-8 **Unimplemented:** Read as '0'

bit 7-4 **PTOPS<3:0>:** PWM Time Base Output Postscale Select bits
1111 = 1:16 postscale
•
•
•
0001 = 1:2 postscale
0000 = 1:1 postscale

bit 3-2 **PTCKPS<1:0>:** PWM Time Base Input Clock Prescale Select bits
11 = PWM time base input clock period is 64 TCY (1:64 prescale)
10 = PWM time base input clock period is 16 TCY (1:16 prescale)
01 = PWM time base input clock period is 4 TCY (1:4 prescale)
00 = PWM time base input clock period is TCY (1:1 prescale)

bit 1-0 **PTMOD<1:0>:** PWM Time Base Mode Select bits
11 = PWM time base operates in a Continuous Up/Down Count mode with interrupts for double PWM updates
10 = PWM time base operates in a Continuous Up/Down Count mode
01 = PWM time base operates in Single Pulse mode
00 = PWM time base operates in a Free-Running mode

REGISTER 15-2: PxTMR: PWM TIMER COUNT VALUE REGISTER

R-0	R/W-0	R/W-0	R/W-0	R/W-0	R/W-0	R/W-0	R/W-0
PTDIR	PTMR<14:8>						
bit 15							bit 8

R/W-0	R/W-0	R/W-0	R/W-0	R/W-0	R/W-0	R/W-0	R/W-0
PTMR<7:0>							
bit 7							bit 0

Legend:			
R = Readable bit	W = Writable bit	U = Unimplemented bit, read as ‘0’	
-n = Value at POR	‘1’ = Bit is set	‘0’ = Bit is cleared	x = Bit is unknown

bit 15 **PTDIR:** PWM Time Base Count Direction Status bit (read-only)
1 = PWM time base is counting down
0 = PWM time base is counting up

bit 14-0 **PTMR <14:0>:** PWM Time Base Register Count Value bits

REGISTER 15-3: PxTPER: PWM TIME BASE PERIOD REGISTER

U-0	R/W-0	R/W-0	R/W-0	R/W-0	R/W-0	R/W-0	R/W-0
—	PTPER<14:8>						
bit 15							bit 8

R/W-0	R/W-0	R/W-0	R/W-0	R/W-0	R/W-0	R/W-0	R/W-0
PTPER<7:0>							
bit 7							bit 0

Legend:			
R = Readable bit	W = Writable bit	U = Unimplemented bit, read as ‘0’	
-n = Value at POR	‘1’ = Bit is set	‘0’ = Bit is cleared	x = Bit is unknown

bit 15 **Unimplemented:** Read as ‘0’

bit 14-0 **PTPER<14:0>:** PWM Time Base Period Value bits

© 2007-2012 Microchip Technology Inc.

REGISTER 15-4: PxSECMP: SPECIAL EVENT COMPARE REGISTER

R/W-0	R/W-0	R/W-0	R/W-0	R/W-0	R/W-0	R/W-0	R/W-0
SEVTDIR(1)	SEVTCMP<14:8>(2)						
bit 15							bit 8

R/W-0	R/W-0	R/W-0	R/W-0	R/W-0	R/W-0	R/W-0	R/W-0
SEVTCMP<7:0>(2)							
bit 7							bit 0

Legend:			
R = Readable bit	W = Writable bit	U = Unimplemented bit, read as '0'	
-n = Value at POR	'1' = Bit is set	'0' = Bit is cleared	x = Bit is unknown

bit 15 **SEVTDIR:** Special Event Trigger Time Base Direction bit(1)
1 = A Special Event Trigger will occur when the PWM time base is counting downward
0 = A Special Event Trigger will occur when the PWM time base is counting upward

bit 14-0 **SEVTCMP<14:0>:** Special Event Compare Value bits(2)

Note 1: SEVTDIR is compared with PTDIR (PxTMR<15>) to generate the Special Event Trigger.
2: PxSECMP<14:0> is compared with PxTMR<14:0> to generate the Special Event Trigger.

REGISTER 15-5: PWMxCON1: PWM CONTROL REGISTER 1(2)

U-0	U-0	U-0	U-0	U-0	R/W-0	R/W-0	R/W-0
—	—	—	—	—	PMOD3	PMOD2	PMOD1
bit 15							bit 8

U-0	R/W-1	R/W-1	R/W-1	U-0	R/W-1	R/W-1	R/W-1
—	PEN3H(1)	PEN2H(1)	PEN1H(1)	—	PEN3L(1)	PEN2L(1)	PEN1L(1)
bit 7							bit 0

Legend:			
R = Readable bit	W = Writable bit	U = Unimplemented bit, read as '0'	
-n = Value at POR	'1' = Bit is set	'0' = Bit is cleared	x = Bit is unknown

bit 15-11 **Unimplemented:** Read as '0'

bit 10-8 **PMOD3:PMOD1:** PWM I/O Pair Mode bits
1 = PWM I/O pin pair is in the Independent PWM Output mode
0 = PWM I/O pin pair is in the Complementary Output mode

bit 7 **Unimplemented:** Read as '0'

bit 6-4 **PEN3H:PEN1H:** PWMxH I/O Enable bits(1)
1 = PWMxH pin is enabled for PWM output
0 = PWMxH pin disabled, I/O pin becomes general purpose I/O

bit 3 **Unimplemented:** Read as '0'

bit 2-0 **PEN3L:PEN1L:** PWMxL I/O Enable bits(1)
1 = PWMxL pin is enabled for PWM output
0 = PWMxL pin disabled, I/O pin becomes general purpose I/O

Note 1: Reset condition of the PENxH and PENxL bits depends on the value of the PWMPIN Configuration bit in the FPOR Configuration register.

2: PWM2 supports only 1 PWM I/O pin pair.

© 2007-2012 Microchip Technology Inc.

REGISTER 15-6: PWMxCON2: PWM CONTROL REGISTER 2

U-0	U-0	U-0	U-0	R/W-0	R/W-0	R/W-0	R/W-0
—	—	—	—	SEVOPS<3:0>			
bit 15							bit 8

U-0	U-0	U-0	U-0	U-0	R/W-0	R/W-0	R/W-0
—	—	—	—	—	IUE	OSYNC	UDIS
bit 7							bit 0

Legend:			
R = Readable bit	W = Writable bit	U = Unimplemented bit, read as '0'	
-n = Value at POR	'1' = Bit is set	'0' = Bit is cleared	x = Bit is unknown

bit 15-12 **Unimplemented:** Read as '0'

bit 11-8 **SEVOPS<3:0>:** PWM Special Event Trigger Output Postscale Select bits
1111 = 1:16 postscale
•
•
•
0001 = 1:2 postscale
0000 = 1:1 postscale

bit 7-3 **Unimplemented:** Read as '0'

bit 2 **IUE:** Immediate Update Enable bit
1 = Updates to the active PxDC registers are immediate
0 = Updates to the active PxDC registers are synchronized to the PWM time base

bit 1 **OSYNC:** Output Override Synchronization bit
1 = Output overrides via the PxOVDCON register are synchronized to the PWM time base
0 = Output overrides via the PxOVDCON register occur on next TCY boundary

bit 0 **UDIS:** PWM Update Disable bit
1 = Updates from Duty Cycle and Period Buffer registers are disabled
0 = Updates from Duty Cycle and Period Buffer registers are enabled

REGISTER 15-7: PxDTCON1: DEAD-TIME CONTROL REGISTER 1

R/W-0	R/W-0	R/W-0	R/W-0	R/W-0	R/W-0	R/W-0	R/W-0
DTBPS<1:0>		DTB<5:0>					
bit 15							bit 8

R/W-0	R/W-0	R/W-0	R/W-0	R/W-0	R/W-0	R/W-0	R/W-0
DTAPS<1:0>		DTA<5:0>					
bit 7							bit 0

Legend:			
R = Readable bit	W = Writable bit	U = Unimplemented bit, read as '0'	
-n = Value at POR	'1' = Bit is set	'0' = Bit is cleared	x = Bit is unknown

bit 15-14 **DTBPS<1:0>:** Dead-Time Unit B Prescale Select bits
11 = Clock period for Dead-Time Unit B is 8 TCY
10 = Clock period for Dead-Time Unit B is 4 TCY
01 = Clock period for Dead-Time Unit B is 2 TCY
00 = Clock period for Dead-Time Unit B is TCY

bit 13-8 **DTB<5:0>:** Unsigned 6-bit Dead-Time Value for Dead-Time Unit B bits

bit 7-6 **DTAPS<1:0>:** Dead-Time Unit A Prescale Select bits
11 = Clock period for Dead-Time Unit A is 8 TCY
10 = Clock period for Dead-Time Unit A is 4 TCY
01 = Clock period for Dead-Time Unit A is 2 TCY
00 = Clock period for Dead-Time Unit A is TCY

bit 5-0 **DTA<5:0>:** Unsigned 6-bit Dead-Time Value for Dead-Time Unit A bits

© 2007-2012 Microchip Technology Inc.

REGISTER 15-8: PxDTCON2: DEAD-TIME CONTROL REGISTER 2(1)

U-0	U-0	U-0	U-0	U-0	U-0	U-0	U-0
—	—	—	—	—	—	—	—
bit 15							bit 8

U-0	U-0	R/W-0	R/W-0	R/W-0	R/W-0	R/W-0	R/W-0
—	—	DTS3A	DTS3I	DTS2A	DTS2I	DTS1A	DTS1I
bit 7							bit 0

Legend:			
R = Readable bit	W = Writable bit	U = Unimplemented bit, read as '0'	
-n = Value at POR	'1' = Bit is set	'0' = Bit is cleared	x = Bit is unknown

bit 15-6 **Unimplemented:** Read as '0'

bit 5 **DTS3A:** Dead-Time Select for PWM3 Signal Going Active bit
1 = Dead time provided from Unit B
0 = Dead time provided from Unit A

bit 4 **DTS3I:** Dead-Time Select for PWM3 Signal Going Inactive bit
1 = Dead time provided from Unit B
0 = Dead time provided from Unit A

bit 3 **DTS2A:** Dead-Time Select for PWM2 Signal Going Active bit
1 = Dead time provided from Unit B
0 = Dead time provided from Unit A

bit 2 **DTS2I:** Dead-Time Select for PWM2 Signal Going Inactive bit
1 = Dead time provided from Unit B
0 = Dead time provided from Unit A

bit 1 **DTS1A:** Dead-Time Select for PWM1 Signal Going Active bit
1 = Dead time provided from Unit B
0 = Dead time provided from Unit A

bit 0 **DTS1I:** Dead-Time Select for PWM1 Signal Going Inactive bit
1 = Dead time provided from Unit B
0 = Dead time provided from Unit A

Note 1: PWM2 supports only 1 PWM I/O pin pair.

REGISTER 15-9: PxFLTACON: FAULT A CONTROL REGISTER(1)

U-0	U-0	R/W-0	R/W-0	R/W-0	R/W-0	R/W-0	R/W-0
—	—	FAOV3H	FAOV3L	FAOV2H	FAOV2L	FAOV1H	FAOV1L
bit 15							bit 8

R/W-0	U-0	U-0	U-0	U-0	R/W-0	R/W-0	R/W-0
FLTAM	—	—	—	—	FAEN3	FAEN2	FAEN1
bit 7							bit 0

Legend:			
R = Readable bit	W = Writable bit	U = Unimplemented bit, read as '0'	
-n = Value at POR	'1' = Bit is set	'0' = Bit is cleared	x = Bit is unknown

bit 15-14 **Unimplemented:** Read as '0'

bit 13-8 **FAOVxH<3:1>:FAOVxL<3:1>:** Fault Input A PWM Override Value bits
1 = The PWM output pin is driven active on an external Fault input event
0 = The PWM output pin is driven inactive on an external Fault input event

bit 7 **FLTAM:** Fault A Mode bit
1 = The Fault A input pin functions in the Cycle-by-Cycle mode
0 = The Fault A input pin latches all control pins to the programmed states in PxFLTACON<13:8>

bit 6-3 **Unimplemented:** Read as '0'

bit 2 **FAEN3:** Fault Input A Enable bit
1 = PWMxH3/PWMxL3 pin pair is controlled by Fault Input A
0 = PWMxH3/PWMxL3 pin pair is not controlled by Fault Input A

bit 1 **FAEN2:** Fault Input A Enable bit
1 = PWMxH2/PWMxL2 pin pair is controlled by Fault Input A
0 = PWMxH2/PWMxL2 pin pair is not controlled by Fault Input A

bit 0 **FAEN1:** Fault Input A Enable bit
1 = PWMxH1/PWMxL1 pin pair is controlled by Fault Input A
0 = PWMxH1/PWMxL1 pin pair is not controlled by Fault Input A

Note 1: PWM2 supports only 1 PWM I/O pin pair.

© 2007-2012 Microchip Technology Inc.

REGISTER 15-10: PxOVDCON: OVERRIDE CONTROL REGISTER(1)

U-0	U-0	R/W-1	R/W-1	R/W-1	R/W-1	R/W-1	R/W-1
—	—	POVD3H	POVD3L	POVD2H	POVD2L	POVD1H	POVD1L
bit 15							bit 8

U-0	U-0	R/W-0	R/W-0	R/W-0	R/W-0	R/W-0	R/W-0
—	—	POUT3H	POUT3L	POUT2H	POUT2L	POUT1H	POUT1L
bit 7							bit 0

Legend:			
R = Readable bit	W = Writable bit	U = Unimplemented bit, read as '0'	
-n = Value at POR	'1' = Bit is set	'0' = Bit is cleared	x = Bit is unknown

bit 15-14 **Unimplemented:** Read as '0'

bit 13-8 **POVDxH<3:1>:POVDxL<3:1>:** PWM Output Override bits
1 = Output on PWMx I/O pin is controlled by the PWM generator
0 = Output on PWMx I/O pin is controlled by the value in the corresponding POUTxH:POUTxL bit

bit 7-6 **Unimplemented:** Read as '0'

bit 5-0 **POUTxH<3:1>:POUTxL<3:1>:** PWM Manual Output bits
1 = PWMx I/O pin is driven active when the corresponding POVDxH:POVDxL bit is cleared
0 = PWMx I/O pin is driven inactive when the corresponding POVDxH:POVDxL bit is cleared

Note 1: PWM2 supports only 1 PWM I/O pin pair.

REGISTER 15-11: PxDC1: PWM DUTY CYCLE REGISTER 1

R/W-0	R/W-0	R/W-0	R/W-0	R/W-0	R/W-0	R/W-0	R/W-0
PDC1<15:8>							
bit 15							bit 8

R/W-0	R/W-0	R/W-0	R/W-0	R/W-0	R/W-0	R/W-0	R/W-0
PDC1<7:0>							
bit 7							bit 0

Legend:			
R = Readable bit	W = Writable bit	U = Unimplemented bit, read as '0'	
-n = Value at POR	'1' = Bit is set	'0' = Bit is cleared	x = Bit is unknown

bit 15-0 **PDC1<15:0>:** PWM Duty Cycle 1 Value bits

REGISTER 15-12: P1DC2: PWM DUTY CYCLE REGISTER 2

R/W-0	R/W-0	R/W-0	R/W-0	R/W-0	R/W-0	R/W-0	R/W-0
PDC2<15:8>							
bit 15							bit 8

R/W-0	R/W-0	R/W-0	R/W-0	R/W-0	R/W-0	R/W-0	R/W-0
PDC2<7:0>							
bit 7							bit 0

Legend:			
R = Readable bit	W = Writable bit	U = Unimplemented bit, read as '0'	
-n = Value at POR	'1' = Bit is set	'0' = Bit is cleared	x = Bit is unknown

bit 15-0 **PDC2<15:0>:** PWM Duty Cycle 2 Value bits

REGISTER 15-13: P1DC3: PWM DUTY CYCLE REGISTER 3

R/W-0	R/W-0	R/W-0	R/W-0	R/W-0	R/W-0	R/W-0	R/W-0
PDC3<15:8>							
bit 15							bit 8

R/W-0	R/W-0	R/W-0	R/W-0	R/W-0	R/W-0	R/W-0	R/W-0
PDC3<7:0>							
bit 7							bit 0

Legend:			
R = Readable bit	W = Writable bit	U = Unimplemented bit, read as '0'	
-n = Value at POR	'1' = Bit is set	'0' = Bit is cleared	x = Bit is unknown

bit 15-0 **PDC3<15:0>:** PWM Duty Cycle 3 Value bits

© 2007-2012 Microchip Technology Inc.

16.0 QUADRATURE ENCODER INTERFACE (QEI) MODULE

Note 1: This data sheet summarizes the features of the dsPIC33FJ32MC202/204 and dsPIC33FJ16MC304 family of devices. It is not intended to be a comprehensive reference source. To complement the information in this data sheet, refer to **Section 15. "Quadrature Encoder Interface (QEI)"** (DS70208) of the *"dsPIC33F/PIC24H Family Reference Manual"*, which is available from the Microchip website (www.microchip.com).

2: Some registers and associated bits described in this section may not be available on all devices. Refer to **Section 4.0 "Memory Organization"** in this data sheet for device-specific register and bit information.

This section describes the Quadrature Encoder Interface (QEI) module and associated operational modes. The QEI module provides the interface to incremental encoders for obtaining mechanical position data.

The operational features of the QEI include:

- Three input channels for two phase signals and index pulse
- 16-bit up/down position counter
- Count direction status
- Position Measurement (x2 and x4) mode
- Programmable digital noise filters on inputs
- Alternate 16-bit Timer/Counter mode
- Quadrature Encoder Interface interrupts

These operating modes are determined by setting the appropriate bits, QEIM<2:0> in (QEIxCON<10:8>). Figure 16-1 depicts the Quadrature Encoder Interface block diagram.

FIGURE 16-1: QUADRATURE ENCODER INTERFACE BLOCK DIAGRAM

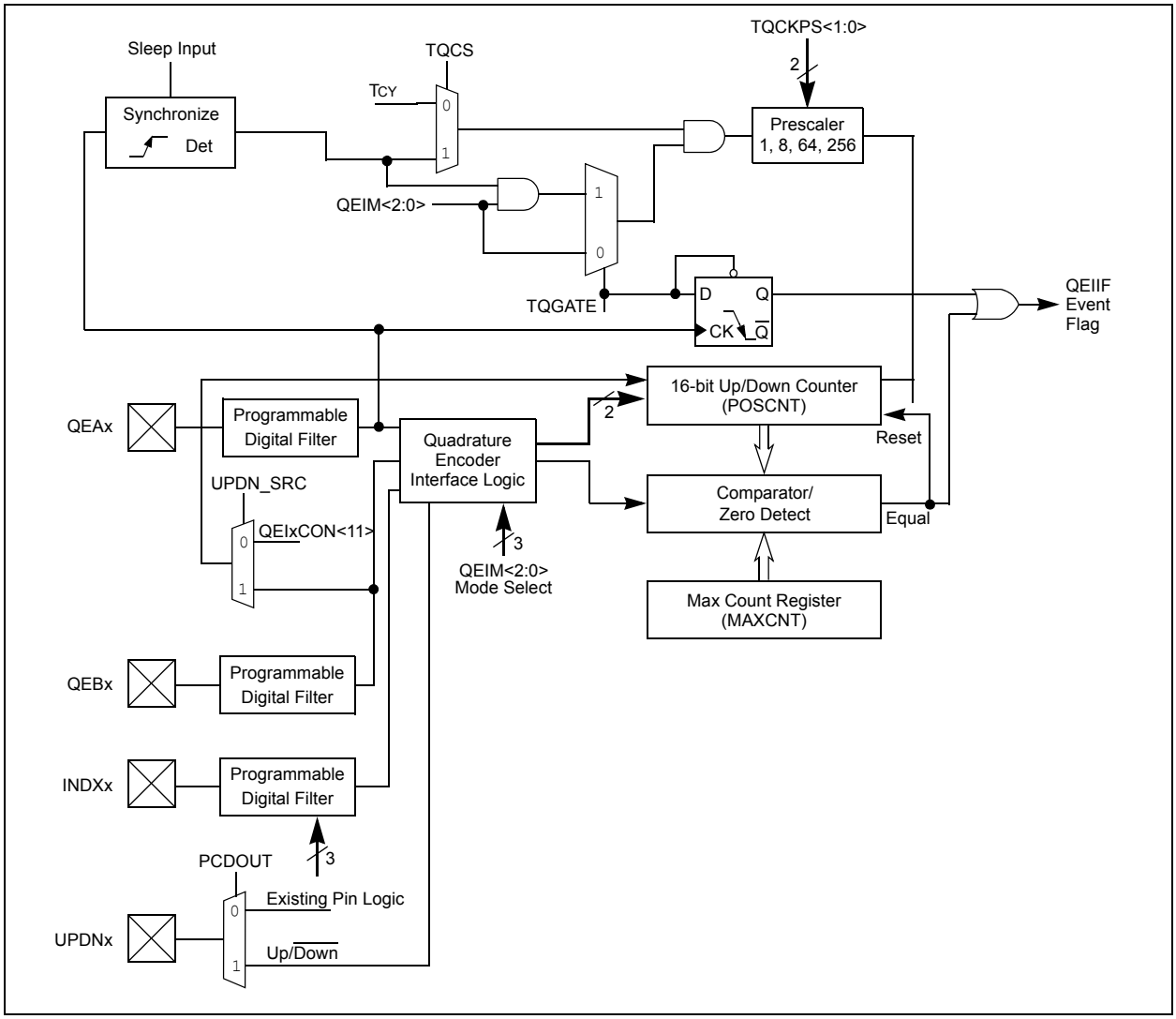

16.1 Ouadrature Encoder Interface Resources

Many useful resources are provided on the main product page of the Microchip web site for the devices listed in this data sheet. This product page, which can be accessed using this link, contains the latest updates and additional information.

Note: In the event you are not able to access the product page using the link above, enter this URL in your browser: http://www.microchip.com/wwwproducts/Devices.aspx?dDocName=en530334

16.1.1 KEY RESOURCES

- **Section 15. "Quadrature Encoder Interface (QEI)"** (DS70208)
- Code Samples
- Application Notes
- Software Libraries
- Webinars
- All related dsPIC33F/PIC24H Family Reference Manuals Sections
- Development Tools

16.2 Control and Status Registers

The QEI module has four user-accessible registers, accessible in either Byte or Word mode:

- Control/Status Register (QEICON) – Allows control of the QEI operation and status flags indicating the module state.
- Digital Filter Control Register (DFLTCON) – Allows control of the digital input filter operation.
- Position Count Register (POSCNT) – Allows reading and writing of the 16-bit position counter.
- Maximum Count Register (MAXCNT) – Holds a value that is compared to the POSCNT counter in some operations.

Note: The POSCNT register allows byte accesses. However, reading the register in Byte mode can result in partially updated values in subsequent reads. Either use Word mode reads/writes, or ensure that the counter is not counting during Byte operations.

© 2007-2012 Microchip Technology Inc.

REGISTER 16-1: QEIxCON: QEI CONTROL REGISTER

R/W-0	U-0	R/W-0	R-0	R/W-0	R/W-0	R/W-0	R/W-0
CNTERR	—	QEISIDL	INDEX	UPDN	QEIM<2:0>		
bit 15							bit 8

R/W-0	R/W-0	R/W-0	R/W-0	R/W-0	R/W-0	R/W-0	R/W-0
SWPAB	PCDOUT	TQGATE	TQCKPS<1:0>		POSRES	TQCS	UPDN_SRC
bit 7							bit 0

Legend:			
R = Readable bit	W = Writable bit	U = Unimplemented bit, read as '0'	
-n = Value at POR	'1' = Bit is set	'0' = Bit is cleared	x = Bit is unknown

bit 15 **CNTERR:** Count Error Status Flag bit
1 = Position count error has occurred
0 = No position count error has occurred

Note: CNTERR flag only applies when QEIM<2:0> = '110' or '100'.

bit 14 **Unimplemented:** Read as '0'

bit 13 **QEISIDL:** Stop in Idle Mode bit
1 = Discontinue module operation when device enters Idle mode
0 = Continue module operation in Idle mode

bit 12 **INDEX:** Index Pin State Status bit (Read-Only)
1 = Index pin is High
0 = Index pin is Low

bit 11 **UPDN:** Position Counter Direction Status bit
1 = Position Counter Direction is positive (+)
0 = Position Counter Direction is negative (-)
(Read-only bit when QEIM<2:0> = '1XX')
(Read/Write bit when QEIM<2:0> = '001')

bit 10-8 **QEIM<2:0>:** Quadrature Encoder Interface Mode Select bits
111 = Quadrature Encoder Interface enabled (x4 mode) with position counter reset by match (MAXCNT)
110 = Quadrature Encoder Interface enabled (x4 mode) with Index Pulse reset of position counter
101 = Quadrature Encoder Interface enabled (x2 mode) with position counter reset by match (MAXCNT)
100 = Quadrature Encoder Interface enabled (x2 mode) with Index Pulse reset of position counter
011 = Unused (Module disabled)
010 = Unused (Module disabled)
001 = Starts 16-bit Timer
000 = Quadrature Encoder Interface/Timer off

bit 7 **SWPAB:** Phase A and Phase B Input Swap Select bit
1 = Phase A and Phase B inputs swapped
0 = Phase A and Phase B inputs not swapped

bit 6 **PCDOUT:** Position Counter Direction State Output Enable bit
1 = Position Counter Direction Status Output Enable (QEI logic controls state of I/O pin)
0 = Position Counter Direction Status Output Disabled (Normal I/O pin operation)

bit 5 **TQGATE:** Timer Gated Time Accumulation Enable bit
1 = Timer gated time accumulation enabled
0 = Timer gated time accumulation disabled

REGISTER 16-1: QEIxCON: QEI CONTROL REGISTER (CONTINUED)

bit 4-3 **TQCKPS<1:0>:** Timer Input Clock Prescale Select bits
11 = 1:256 prescale value
10 = 1:64 prescale value
01 = 1:8 prescale value
00 = 1:1 prescale value
(Prescaler utilized for 16-bit Timer mode only)

bit 2 **POSRES:** Position Counter Reset Enable bit
1 = Index Pulse resets Position Counter
0 = Index Pulse does not reset Position Counter
Note: Bit applies only when QEIM<2:0> = 100 or 110.

bit 1 **TQCS:** Timer Clock Source Select bit
1 = External clock from pin QEA (on the rising edge)
0 = Internal clock (TCY)

bit 0 **UPDN_SRC:** Position Counter Direction Selection Control bit
1 = QEB pin state defines position counter direction
0 = Control/Status bit, UPDN (QEICON<11>), defines timer counter (POSCNT) direction
Note: When configured for QEI mode, control bit is a ‘don’t care’.

© 2007-2012 Microchip Technology Inc.

REGISTER 16-2: DFLTxCON: DIGITAL FILTER CONTROL REGISTER

U-0	U-0	U-0	U-0	U-0	R/W-0	R/W-0	R/W-0
—	—	—	—	—	IMV<1:0>		CEID
bit 15							bit 8

R/W-0	R/W-0	U-0	U-0	U-0	U-0
QEOUT	QECK<2:0>	—	—	—	—
bit 7					bit 0

Legend:			
R = Readable bit	W = Writable bit	U = Unimplemented bit, read as '0'	
-n = Value at POR	'1' = Bit is set	'0' = Bit is cleared	x = Bit is unknown

bit 15-11 **Unimplemented:** Read as '0'

bit 10-9 **IMV<1:0>:** Index Match Value bits – These bits allow the user application to specify the state of the QEA and QEB input pins during an Index pulse when the POSxCNT register is to be reset.
In 4X Quadrature Count Mode:
IMV1 = Required State of Phase B input signal for match on index pulse
IMV0 = Required State of Phase A input signal for match on index pulse
In 2X Quadrature Count Mode:
IMV1 = Selects Phase input signal for Index state match (0 = Phase A, 1 = Phase B)
IMV0 = Required state of the selected Phase input signal for match on index pulse

bit 8 **CEID:** Count Error Interrupt Disable bit
1 = Interrupts due to count errors are disabled
0 = Interrupts due to count errors are enabled

bit 7 **QEOUT:** QEA/QEB/INDX Pin Digital Filter Output Enable bit
1 = Digital filter outputs enabled
0 = Digital filter outputs disabled (normal pin operation)

bit 6-4 **QECK<2:0>:** QEA/QEB/INDX Digital Filter Clock Divide Select Bits
111 = 1:256 Clock Divide
110 = 1:128 Clock Divide
101 = 1:64 Clock Divide
100 = 1:32 Clock Divide
011 = 1:16 Clock Divide
010 = 1:4 Clock Divide
001 = 1:2 Clock Divide
000 = 1:1 Clock Divide

bit 3-0 **Unimplemented:** Read as '0'

NOTES:

© 2007-2012 Microchip Technology Inc.

17.0 SERIAL PERIPHERAL INTERFACE (SPI)

Note 1: This data sheet summarizes the features of the dsPIC33FJ32MC202/204 and dsPIC33FJ16MC304 family of devices. It is not intended to be a comprehensive reference source. To complement the information in this data sheet, refer to **Section 18. "Serial Peripheral Interface (SPI)"** (DS70206) of the *"dsPIC33F/PIC24H Family Reference Manual"*, which is available on the Microchip website (www.microchip.com).

2: Some registers and associated bits described in this section may not be available on all devices. Refer to **Section 4.0 "Memory Organization"** in this data sheet for device-specific register and bit information.

The Serial Peripheral Interface (SPI) module is a synchronous serial interface useful for communicating with other peripheral or microcontroller devices. These peripheral devices can be serial EEPROMs, shift registers, display drivers, analog-to-digital converters, etc. The SPI module is compatible with SPI and SIOP from Motorola®.

Each SPI module consists of a 16-bit shift register, SPIxSR (where x = 1 or 2), used for shifting data in and out, and a buffer register, SPIxBUF. A control register, SPIxCON, configures the module. Additionally, a status register, SPIxSTAT, indicates status conditions.

The serial interface consists of these four pins:

- SDIx (serial data input)
- SDOx (serial data output)
- SCKx (shift clock input or output)
- SSx (active-low slave select)

In Master mode operation, SCK is a clock output. In Slave mode, it is a clock input.

FIGURE 17-1: SPI MODULE BLOCK DIAGRAM

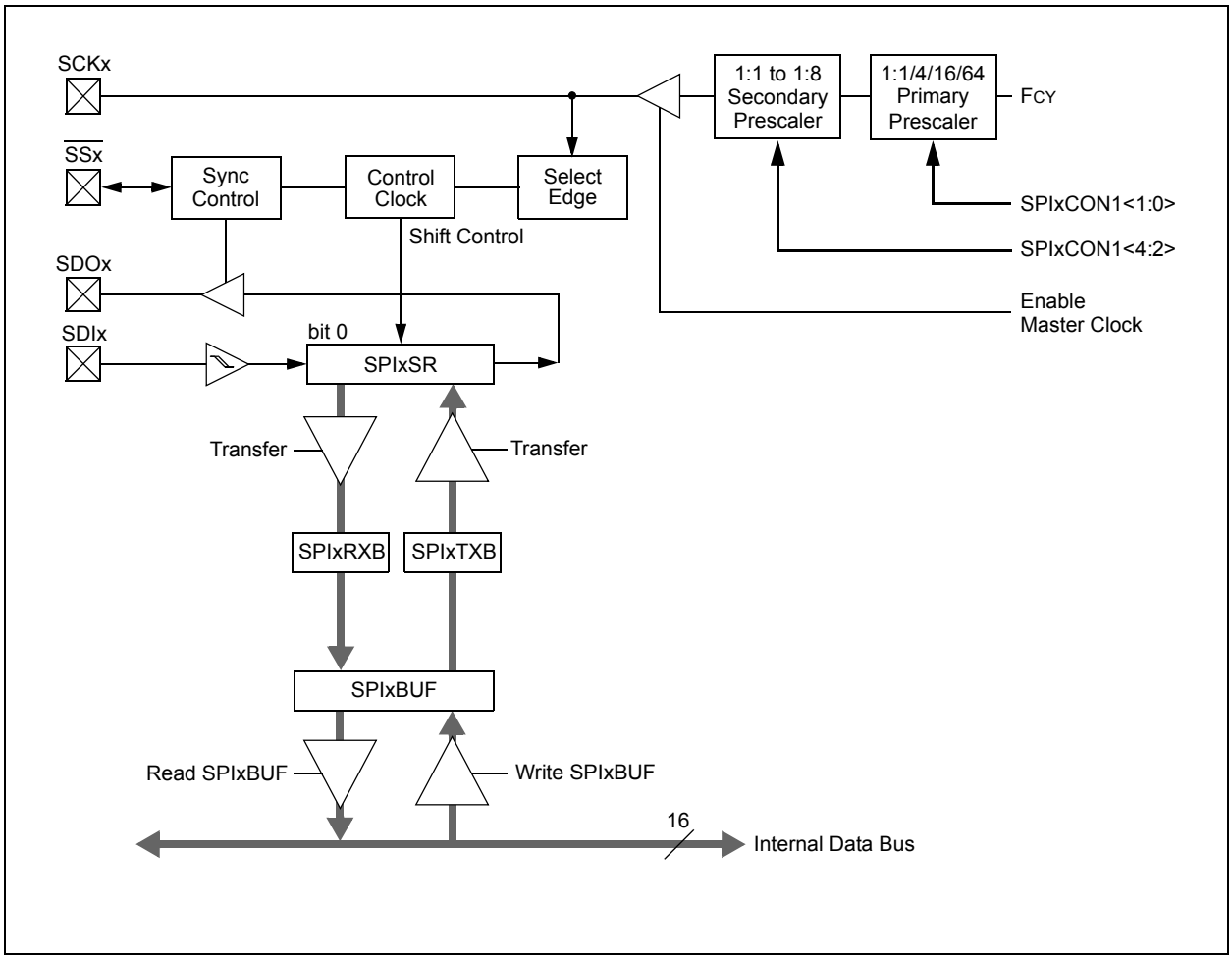

17.1 SPI Helpful Tips

1. In Frame mode, if there is a possibility that the master may not be initialized before the slave:
   a) If FRMPOL (SPIxCON2<13>) = 1, use a pull-down resistor on SSx.
   b) If FRMPOL = 0, use a pull-up resistor on SSx.

Note:	This insures that the first frame transmission after initialization is not shifted or corrupted.

2. In non-framed 3-wire mode, (i.e., not using SSx from a master):
   a) If CKP (SPIxCON1<6>) = 1, always place a pull-up resistor on SSx.
   b) If CKP = 0, always place a pull-down resistor on SSx.

Note:	This will insure that during power-up and initialization the master/slave will not lose sync due to an errant SCK transition that would cause the slave to accumulate data shift errors for both transmit and receive appearing as corrupted data.

3. FRMEN (SPIxCON2<15>) = 1 and SSEN (SPIxCON1<7>) = 1 are exclusive and invalid. In Frame mode, SCKx is continuous and the Frame sync pulse is active on the SSx pin, which indicates the start of a data frame.

Note:	Not all third-party devices support Frame mode timing. Refer to the SPI electrical characteristics for details.

4. In Master mode only, set the SMP bit (SPIxCON1<9>) to a '1' for the fastest SPI data rate possible. The SMP bit can only be set at the same time or after the MSTEN bit (SPIxCON1<5>) is set.
5. To avoid invalid slave read data to the master, the user's master software must guarantee enough time for slave software to fill its write buffer before the user application initiates a master write/read cycle. It is always advisable to preload the SPIxBUF transmit register in advance of the next master transaction cycle. SPIxBUF is transferred to the SPI shift register and is empty once the data transmission begins.

17.2 SPI Resources

Many useful resources are provided on the main product page of the Microchip web site for the devices listed in this data sheet. This product page, which can be accessed using this link, contains the latest updates and additional information.

Note:	In the event you are not able to access the product page using the link above, enter this URL in your browser: http://www.microchip.com/wwwproducts/Devices.aspx?dDocName=en530334

17.2.1 KEY RESOURCES

- **Section 18. "Serial Peripheral Interface (SPI)"** (DS70206)
- Code Samples
- Application Notes
- Software Libraries
- Webinars
- All related dsPIC33F/PIC24H Family Reference Manuals Sections
- Development Tools

© 2007-2012 Microchip Technology Inc.

17.3 SPI Control Registers

REGISTER 17-1: SPIxSTAT: SPIx STATUS AND CONTROL REGISTER

R/W-0	U-0	R/W-0	U-0	U-0	U-0	U-0	U-0
SPIEN	—	SPISIDL	—	—	—	—	—
bit 15							bit 8

U-0	R/C-0	U-0	U-0	U-0	U-0	R-0	R-0
—	SPIROV	—	—	—	—	SPITBF	SPIRBF
bit 7							bit 0

Legend:	C = Clearable bit		
R = Readable bit	W = Writable bit	U = Unimplemented bit, read as '0'	
-n = Value at POR	'1' = Bit is set	'0' = Bit is cleared	x = Bit is unknown

bit 15 **SPIEN:** SPIx Enable bit
1 = Enables module and configures SCKx, SDOx, SDIx and $\overline{SSx}$ as serial port pins
0 = Disables module

bit 14 **Unimplemented:** Read as '0'

bit 13 **SPISIDL:** Stop in Idle Mode bit
1 = Discontinue module operation when device enters Idle mode
0 = Continue module operation in Idle mode

bit 12-7 **Unimplemented:** Read as '0'

bit 6 **SPIROV:** Receive Overflow Flag bit
1 = A new byte/word is completely received and discarded. The user software has not read the previous data in the SPIxBUF register
0 = No overflow has occurred.

bit 5-2 **Unimplemented:** Read as '0'

bit 1 **SPITBF:** SPIx Transmit Buffer Full Status bit
1 = Transmit not yet started, SPIxTXB is full
0 = Transmit started, SPIxTXB is empty
Automatically set in hardware when CPU writes SPIxBUF location, loading SPIxTXB.
Automatically cleared in hardware when SPIx module transfers data from SPIxTXB to SPIxSR.

bit 0 **SPIRBF:** SPIx Receive Buffer Full Status bit
1 = Receive complete, SPIxRXB is full
0 = Receive is not complete, SPIxRXB is empty
Automatically set in hardware when SPIx transfers data from SPIxSR to SPIxRXB.
Automatically cleared in hardware when core reads SPIxBUF location, reading SPIxRXB.

REGISTER 17-2: SPIxCON1: SPIx CONTROL REGISTER 1

U-0	U-0	U-0	R/W-0	R/W-0	R/W-0	R/W-0	R/W-0
—	—	—	DISSCK	DISSDO	MODE16	SMP	CKE(1)
bit 15							bit 8

R/W-0	R/W-0	R/W-0	R/W-0	R/W-0	R/W-0	R/W-0	R/W-0
SSEN(2)	CKP	MSTEN	SPRE<2:0>(3)			PPRE<1:0>(3)	
bit 7							bit 0

Legend:			
R = Readable bit	W = Writable bit	U = Unimplemented bit, read as '0'	
-n = Value at POR	'1' = Bit is set	'0' = Bit is cleared	x = Bit is unknown

bit 15-13 **Unimplemented:** Read as '0'

bit 12 **DISSCK:** Disable SCKx pin bit (SPI Master modes only)
1 = Internal SPI clock is disabled, pin functions as I/O
0 = Internal SPI clock is enabled

bit 11 **DISSDO:** Disable SDOx pin bit
1 = SDOx pin is not used by module; pin functions as I/O
0 = SDOx pin is controlled by the module

bit 10 **MODE16:** Word/Byte Communication Select bit
1 = Communication is word-wide (16 bits)
0 = Communication is byte-wide (8 bits)

bit 9 **SMP:** SPIx Data Input Sample Phase bit
Master mode:
1 = Input data sampled at end of data output time
0 = Input data sampled at middle of data output time
Slave mode:
SMP must be cleared when SPIx is used in Slave mode.

bit 8 **CKE:** SPIx Clock Edge Select bit(1)
1 = Serial output data changes on transition from active clock state to Idle clock state (see bit 6)
0 = Serial output data changes on transition from Idle clock state to active clock state (see bit 6)

bit 7 **SSEN:** Slave Select Enable bit (Slave mode)(2)
1 = SSx pin used for Slave mode
0 = SSx pin not used by module. Pin controlled by port function

bit 6 **CKP:** Clock Polarity Select bit
1 = Idle state for clock is a high level; active state is a low level
0 = Idle state for clock is a low level; active state is a high level

bit 5 **MSTEN:** Master Mode Enable bit
1 = Master mode
0 = Slave mode

Note 1: The CKE bit is not used in the Framed SPI modes. Program this bit to '0' for the Framed SPI modes (FRMEN = 1).

2: This bit must be cleared when FRMEN = 1.

3: Do not set both Primary and Secondary prescalers to a value of 1:1.

© 2007-2012 Microchip Technology Inc.

REGISTER 17-2: SPIxCON1: SPIx CONTROL REGISTER 1 (CONTINUED)

bit 4-2 **SPRE<2:0>:** Secondary Prescale bits (Master mode)(3)
111 = Secondary prescale 1:1
110 = Secondary prescale 2:1
•
•
•
000 = Secondary prescale 8:1

bit 1-0 **PPRE<1:0>:** Primary Prescale bits (Master mode)(3)
11 = Primary prescale 1:1
10 = Primary prescale 4:1
01 = Primary prescale 16:1
00 = Primary prescale 64:1

Note 1: The CKE bit is not used in the Framed SPI modes. Program this bit to '0' for the Framed SPI modes (FRMEN = 1).

2: This bit must be cleared when FRMEN = 1.

3: Do not set both Primary and Secondary prescalers to a value of 1:1.

REGISTER 17-3: SPIxCON2: SPIx CONTROL REGISTER 2

R/W-0	R/W-0	R/W-0	U-0	U-0	U-0	U-0	U-0
FRMEN	SPIFSD	FRMPOL	—	—	—	—	—
bit 15							bit 8

U-0	U-0	U-0	U-0	U-0	U-0	R/W-0	U-0
—	—	—	—	—	—	FRMDLY	—
bit 7							bit 0

Legend:			
R = Readable bit	W = Writable bit	U = Unimplemented bit, read as '0'	
-n = Value at POR	'1' = Bit is set	'0' = Bit is cleared	x = Bit is unknown

bit 15 **FRMEN:** Framed SPIx Support bit
1 = Framed SPIx support enabled ($\overline{SSx}$ pin used as frame sync pulse input/output)
0 = Framed SPIx support disabled

bit 14 **SPIFSD:** Frame Sync Pulse Direction Control bit
1 = Frame sync pulse input (slave)
0 = Frame sync pulse output (master)

bit 13 **FRMPOL:** Frame Sync Pulse Polarity bit
1 = Frame sync pulse is active-high
0 = Frame sync pulse is active-low

bit 12-2 **Unimplemented:** Read as '0'

bit 1 **FRMDLY:** Frame Sync Pulse Edge Select bit
1 = Frame sync pulse coincides with first bit clock
0 = Frame sync pulse precedes first bit clock

bit 0 **Unimplemented:** This bit must not be set to '1' by the user application

© 2007-2012 Microchip Technology Inc.

18.0 INTER-INTEGRATED CIRCUIT™ (I^2C™)

Note 1: This data sheet summarizes the features of the dsPIC33FJ32MC202/204 and dsPIC33FJ16MC304 family of devices. It is not intended to be a comprehensive reference source. To complement the information in this data sheet, refer to **Section 19. "Inter-Integrated Circuit™ (I^2C™)"** (DS70195) of the *"dsPIC33F/PIC24H Family Reference Manual"*, which is available from the Microchip website (www.microchip.com).

2: Some registers and associated bits described in this section may not be available on all devices. Refer to **Section 4.0 "Memory Organization"** in this data sheet for device-specific register and bit information.

The Inter-Integrated Circuit (I^2C) module provides complete hardware support for both Slave and Multi-Master modes of the I^2C serial communication standard, with a 16-bit interface.

The I^2C module has a 2-pin interface:

- The SCLx pin is clock
- The SDAx pin is data

The I^2C module offers the following key features:

- I^2C interface supporting both Master and Slave modes of operation
- I^2C Slave mode supports 7-bit and 10-bit addressing
- I^2C Master mode supports 7-bit and 10-bit addressing
- I^2C port allows bidirectional transfers between master and slaves
- Serial clock synchronization for I^2C port can be used as a handshake mechanism to suspend and resume serial transfer (SCLREL control)
- I^2C supports multi-master operation, detects bus collision and arbitrates accordingly

18.1 Operating Modes

The hardware fully implements all the master and slave functions of the I^2C Standard and Fast mode specifications, as well as 7-bit and 10-bit addressing.

The I^2C module can operate either as a slave or a master on an I^2C bus.

The following types of I^2C operation are supported:

- I^2C slave operation with 7-bit addressing
- I^2C slave operation with 10-bit addressing
- I^2C master operation with 7-bit or 10-bit addressing

For details about the communication sequence in each of these modes, refer to the *"dsPIC33F/PIC24H Family Reference Manual"*. Please see the Microchip web site (www.microchip.com) for the latest dsPIC33F/PIC24H Family Reference Manual sections.

FIGURE 18-1: I^2C™ BLOCK DIAGRAM (x = 1)

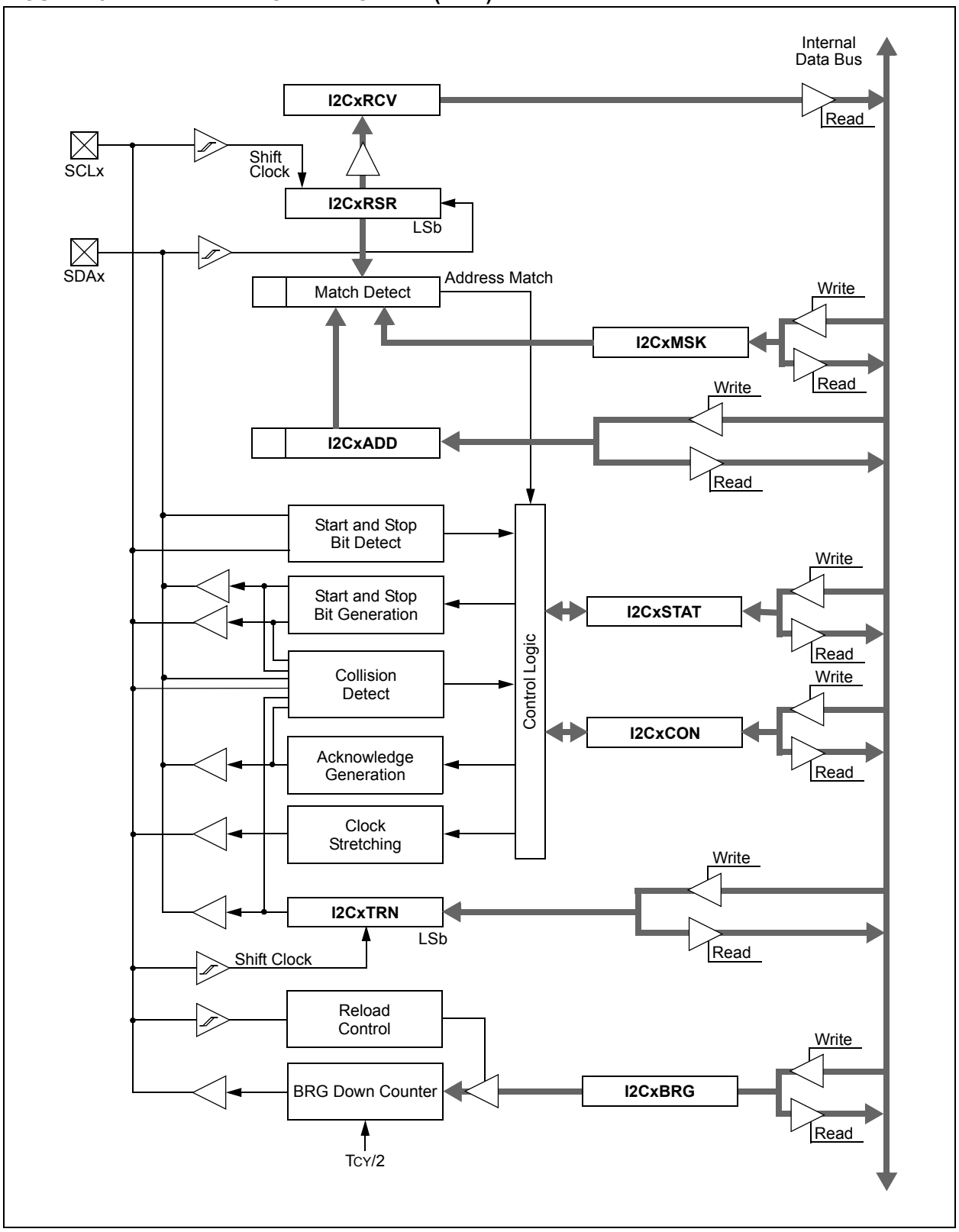

© 2007-2012 Microchip Technology Inc.

18.2 I²C Resources

Many useful resources are provided on the main product page of the Microchip web site for the devices listed in this data sheet. This product page, which can be accessed using this link, contains the latest updates and additional information.

Note: In the event you are not able to access the product page using the link above, enter this URL in your browser: http://www.microchip.com/wwwproducts/Devices.aspx?dDocName=en530334

18.2.1 KEY RESOURCES

- **Section 13. "Inter-Integrated Circuit™ (I²C™)"** (DS70195)
- Code Samples
- Application Notes
- Software Libraries
- Webinars
- All related dsPIC33F/PIC24H Family Reference Manuals Sections
- Development Tools

18.3 I²C Registers

I2CxCON and I2CxSTAT are control and status registers, respectively. The I2CxCON register is readable and writable. The lower six bits of I2CxSTAT are read-only. The remaining bits of the I2CSTAT are read/write:

- I2CxRSR is the shift register used for shifting data.
- I2CxRCV is the receive buffer and the register to which data bytes are written, or from which data bytes are read.
- I2CxTRN is the transmit register to which bytes are written during a transmit operation.
- The I2CxADD register holds the slave address.
- A status bit, ADD10, indicates 10-bit Address mode.
- The I2CxBRG acts as the Baud Rate Generator (BRG) reload value.

In receive operations, I2CxRSR and I2CxRCV together form a double-buffered receiver. When I2CxRSR receives a complete byte, it is transferred to I2CxRCV, and an interrupt pulse is generated.

18.4 I²C Control Registers

REGISTER 18-1: I2CxCON: I2Cx CONTROL REGISTER

R/W-0	U-0	R/W-0	R/W-1 HC	R/W-0	R/W-0	R/W-0	R/W-0
I2CEN	—	I2CSIDL	SCLREL	IPMIEN	A10M	DISSLW	SMEN
bit 15							bit 8

R/W-0	R/W-0	R/W-0	R/W-0 HC	R/W-0 HC	R/W-0 HC	R/W-0 HC	R/W-0 HC
GCEN	STREN	ACKDT	ACKEN	RCEN	PEN	RSEN	SEN
bit 7							bit 0

Legend:	U = Unimplemented bit, read as '0'		
R = Readable bit	W = Writable bit	HS = Set in hardware	HC = Cleared in hardware
-n = Value at POR	'1' = Bit is set	'0' = Bit is cleared	x = Bit is unknown

bit 15 **I2CEN:** I2Cx Enable bit
1 = Enables the I2Cx module and configures the SDAx and SCLx pins as serial port pins
0 = Disables the I2Cx module. All I²C pins are controlled by port functions

bit 14 **Unimplemented:** Read as '0'

bit 13 **I2CSIDL:** Stop in Idle Mode bit
1 = Discontinue module operation when device enters an Idle mode
0 = Continue module operation in Idle mode

bit 12 **SCLREL:** SCLx Release Control bit (when operating as I²C slave)
1 = Release SCLx clock
0 = Hold SCLx clock low (clock stretch)
If STREN = 1:
Bit is R/W (i.e., software can write '0' to initiate stretch and write '1' to release clock). Hardware clear at beginning of slave transmission. Hardware clear at end of slave reception.
If STREN = 0:
Bit is R/S (i.e., software can only write '1' to release clock). Hardware clear at beginning of slave transmission.

bit 11 **IPMIEN:** Intelligent Peripheral Management Interface (IPMI) Enable bit
1 = IPMI mode is enabled; all addresses Acknowledged
0 = IPMI mode disabled

bit 10 **A10M:** 10-bit Slave Address bit
1 = I2CxADD is a 10-bit slave address
0 = I2CxADD is a 7-bit slave address

bit 9 **DISSLW:** Disable Slew Rate Control bit
1 = Slew rate control disabled
0 = Slew rate control enabled

bit 8 **SMEN:** SMBus Input Levels bit
1 = Enable I/O pin thresholds compliant with SMBus specification
0 = Disable SMBus input thresholds

bit 7 **GCEN:** General Call Enable bit (when operating as I²C slave)
1 = Enable interrupt when a general call address is received in the I2CxRSR (module is enabled for reception)
0 = General call address disabled

bit 6 **STREN:** SCLx Clock Stretch Enable bit (when operating as I²C slave)
Used in conjunction with SCLREL bit.
1 = Enable software or receive clock stretching
0 = Disable software or receive clock stretching

© 2007-2012 Microchip Technology Inc.

REGISTER 18-1: I2CxCON: I2Cx CONTROL REGISTER (CONTINUED)

bit 5 **ACKDT:** Acknowledge Data bit (when operating as I^2C master, applicable during master receive)
Value that will be transmitted when the software initiates an Acknowledge sequence.
1 = Send NACK during Acknowledge
0 = Send ACK during Acknowledge

bit 4 **ACKEN:** Acknowledge Sequence Enable bit
(when operating as I^2C master, applicable during master receive)
1 = Initiate Acknowledge sequence on SDAx and SCLx pins and transmit ACKDT data bit. Hardware clear at end of master Acknowledge sequence
0 = Acknowledge sequence not in progress

bit 3 **RCEN:** Receive Enable bit (when operating as I^2C master)
1 = Enables Receive mode for I^2C. Hardware clear at end of eighth bit of master receive data byte
0 = Receive sequence not in progress

bit 2 **PEN:** Stop Condition Enable bit (when operating as I^2C master)
1 = Initiate Stop condition on SDAx and SCLx pins. Hardware clear at end of master Stop sequence
0 = Stop condition not in progress

bit 1 **RSEN:** Repeated Start Condition Enable bit (when operating as I^2C master)
1 = Initiate Repeated Start condition on SDAx and SCLx pins. Hardware clear at end of master Repeated Start sequence
0 = Repeated Start condition not in progress

bit 0 **SEN:** Start Condition Enable bit (when operating as I^2C master)
1 = Initiate Start condition on SDAx and SCLx pins. Hardware clear at end of master Start sequence
0 = Start condition not in progress

REGISTER 18-2: I2CxSTAT: I2Cx STATUS REGISTER

R-0 HSC	R-0 HSC	U-0	U-0	U-0	R/C-0 HS	R-0 HSC	R-0 HSC
ACKSTAT	TRSTAT	—	—	—	BCL	GCSTAT	ADD10
bit 15							bit 8

R/C-0 HS	R/C-0 HS	R-0 HSC	R/C-0 HSC	R/C-0 HSC	R-0 HSC	R-0 HSC	R-0 HSC
IWCOL	I2COV	D_A	P	S	R_W	RBF	TBF
bit 7							bit 0

Legend:	U = Unimplemented bit, read as '0' C = Clear only bit		
R = Readable bit	W = Writable bit	HS = Set in hardware	HSC = Hardware set/cleared
-n = Value at POR	'1' = Bit is set	'0' = Bit is cleared	x = Bit is unknown

bit 15 **ACKSTAT:** Acknowledge Status bit
(when operating as I^2C master, applicable to master transmit operation)
1 = NACK received from slave
0 = ACK received from slave
Hardware set or clear at end of slave Acknowledge.

bit 14 **TRSTAT:** Transmit Status bit (when operating as I^2C master, applicable to master transmit operation)
1 = Master transmit is in progress (8 bits + ACK)
0 = Master transmit is not in progress
Hardware set at beginning of master transmission. Hardware clear at end of slave Acknowledge.

bit 13-11 **Unimplemented:** Read as '0'

bit 10 **BCL:** Master Bus Collision Detect bit
1 = A bus collision has been detected during a master operation
0 = No collision
Hardware set at detection of bus collision.

bit 9 **GCSTAT:** General Call Status bit
1 = General call address was received
0 = General call address was not received
Hardware set when address matches general call address. Hardware clear at Stop detection.

bit 8 **ADD10:** 10-bit Address Status bit
1 = 10-bit address was matched
0 = 10-bit address was not matched
Hardware set at match of 2nd byte of matched 10-bit address. Hardware clear at Stop detection.

bit 7 **IWCOL:** Write Collision Detect bit
1 = An attempt to write the I2CxTRN register failed because the I^2C module is busy
0 = No collision
Hardware set at occurrence of write to I2CxTRN while busy (cleared by software).

bit 6 **I2COV:** Receive Overflow Flag bit
1 = A byte was received while the I2CxRCV register is still holding the previous byte
0 = No overflow
Hardware set at attempt to transfer I2CxRSR to I2CxRCV (cleared by software).

bit 5 **D_A:** Data/Address bit (when operating as I^2C slave)
1 = Indicates that the last byte received was data
0 = Indicates that the last byte received was device address
Hardware clear at device address match. Hardware set by reception of slave byte.

bit 4 **P:** Stop bit
1 = Indicates that a Stop bit has been detected last
0 = Stop bit was not detected last
Hardware set or clear when Start, Repeated Start or Stop detected.

© 2007-2012 Microchip Technology Inc.

REGISTER 18-2: I2CxSTAT: I2Cx STATUS REGISTER (CONTINUED)

bit 3 **S:** Start bit
1 = Indicates that a Start (or Repeated Start) bit has been detected last
0 = Start bit was not detected last
Hardware set or clear when Start, Repeated Start or Stop detected.

bit 2 **R_W:** Read/Write Information bit (when operating as I^2C slave)
1 = Read – indicates data transfer is output from slave
0 = Write – indicates data transfer is input to slave
Hardware set or clear after reception of I^2C device address byte.

bit 1 **RBF:** Receive Buffer Full Status bit
1 = Receive complete, I2CxRCV is full
0 = Receive not complete, I2CxRCV is empty
Hardware set when I2CxRCV is written with received byte. Hardware clear when software reads I2CxRCV.

bit 0 **TBF:** Transmit Buffer Full Status bit
1 = Transmit in progress, I2CxTRN is full
0 = Transmit complete, I2CxTRN is empty
Hardware set when software writes I2CxTRN. Hardware clear at completion of data transmission.

REGISTER 18-3: I2CxMSK: I2Cx SLAVE MODE ADDRESS MASK REGISTER

U-0	U-0	U-0	U-0	U-0	U-0	R/W-0	R/W-0
—	—	—	—	—	—	AMSK9	AMSK8
bit 15							bit 8

R/W-0	R/W-0	R/W-0	R/W-0	R/W-0	R/W-0	R/W-0	R/W-0
AMSK7	AMSK6	AMSK5	AMSK4	AMSK3	AMSK2	AMSK1	AMSK0
bit 7							bit 0

Legend:			
R = Readable bit	W = Writable bit	U = Unimplemented bit, read as ‘0’	
-n = Value at POR	‘1’ = Bit is set	‘0’ = Bit is cleared	x = Bit is unknown

bit 15-10 **Unimplemented:** Read as ‘0’

bit 9-0 **AMSKx:** Mask for Address bit x Select bit

1 = Enable masking for bit x of incoming message address; bit match not required in this position

0 = Disable masking for bit x; bit match required in this position

© 2007-2012 Microchip Technology Inc.

19.0 UNIVERSAL ASYNCHRONOUS RECEIVER TRANSMITTER (UART)

Note 1: This data sheet summarizes the features of the dsPIC33FJ32MC202/204 and dsPIC33FJ16MC304 family of devices. It is not intended to be a comprehensive reference source. To complement the information in this data sheet, refer to **Section 17. "UART"** (DS70188) of the *"dsPIC33F/PIC24H Family Reference Manual"*, which is available on the Microchip web site (www.microchip.com).

2: Some registers and associated bits described in this section may not be available on all devices. Refer to **Section 4.0 "Memory Organization"** in this data sheet for device-specific register and bit information.

The Universal Asynchronous Receiver Transmitter (UART) module is one of the serial I/O modules available in the dsPIC33FJ32MC202/204 and dsPIC33FJ16MC304 device family. The UART is a full-duplex asynchronous system that can communicate with peripheral devices, such as personal computers, LIN, and RS-232 and RS-485 interfaces. The module also supports a hardware flow control option with the $\overline{\text{UxCTS}}$ and $\overline{\text{UxRTS}}$ pins and also includes an IrDA® encoder and decoder.

The primary features of the UART module are:

- Full-Duplex, 8-bit or 9-bit Data Transmission through the UxTX and UxRX pins
- Even, Odd or No Parity Options (for 8-bit data)
- One or two stop bits
- Hardware flow control option with $\overline{\text{UxCTS}}$ and $\overline{\text{UxRTS}}$ pins
- Fully integrated Baud Rate Generator with 16-bit prescaler
- Baud rates ranging from 10 Mbps to 38 bps at 40 MIPS
- 4-deep First-In First-Out (FIFO) Transmit Data buffer
- 4-deep FIFO Receive Data buffer
- Parity, framing and buffer overrun error detection
- Support for 9-bit mode with Address Detect (9th bit = 1)
- Transmit and Receive interrupts
- A separate interrupt for all UART error conditions
- Loopback mode for diagnostic support
- Support for sync and break characters
- Support for automatic baud rate detection
- IrDA® encoder and decoder logic
- 16x baud clock output for IrDA® support

A simplified block diagram of the UART module is shown in Figure 19-1. The UART module consists of these key hardware elements:

- Baud Rate Generator
- Asynchronous Transmitter
- Asynchronous Receiver

FIGURE 19-1: UART SIMPLIFIED BLOCK DIAGRAM

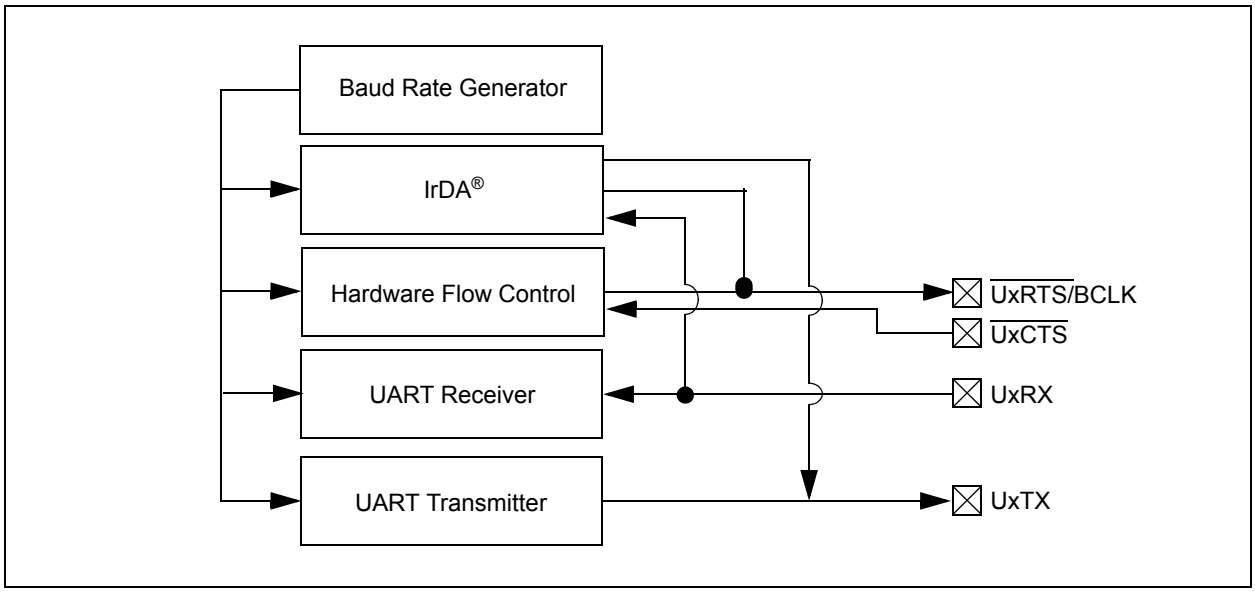

19.1 UART Helpful Tips

1. In multi-node direct-connect UART networks, UART receive inputs react to the complementary logic level defined by the URXINV bit (UxMODE<4>), which defines the idle state, the default of which is logic high, (i.e., URXINV = 0). Because remote devices do not initialize at the same time, it is likely that one of the devices, because the RX line is floating, will trigger a start bit detection and will cause the first byte received after the device has been initialized to be invalid. To avoid this situation, the user should use a pull-up or pull-down resistor on the RX pin depending on the value of the URXINV bit.
   a) If URXINV = 0, use a pull-up resistor on the RX pin.
   b) If URXINV = 1, use a pull-down resistor on the RX pin.
2. The first character received on a wake-up from Sleep mode caused by activity on the UxRX pin of the UART module will be invalid. In Sleep mode, peripheral clocks are disabled. By the time the oscillator system has restarted and stabilized from Sleep mode, the baud rate bit sampling clock relative to the incoming UxRX bit timing is no longer synchronized, resulting in the first character being invalid. This is to be expected.

19.2 UART Resources

Many useful resources are provided on the main product page of the Microchip web site for the devices listed in this data sheet. This product page, which can be accessed using this link, contains the latest updates and additional information.

Note: In the event you are not able to access the product page using the link above, enter this URL in your browser: http://www.microchip.com/wwwproducts/Devices.aspx?dDocName=en530334

19.2.1 KEY RESOURCES

- **Section 17. "UART"** (DS70188)
- Code Samples
- Application Notes
- Software Libraries
- Webinars
- All related dsPIC33F/PIC24H Family Reference Manuals Sections
- Development Tools

© 2007-2012 Microchip Technology Inc.

19.3 UART Control Registers

REGISTER 19-1: UxMODE: UARTx MODE REGISTER

R/W-0	U-0	R/W-0	R/W-0	R/W-0	U-0	R/W-0	R/W-0
UARTEN(1)	—	USIDL	IREN(2)	RTSMD	—	UEN<1:0>	
bit 15							bit 8

R/W-0 HC	R/W-0	R/W-0, HC	R/W-0	R/W-0	R/W-0	R/W-0	R/W-0
WAKE	LPBACK	ABAUD	URXINV	BRGH	PDSEL<1:0>		STSEL
bit 7							bit 0

Legend:	HC = Hardware Clearable		
R = Readable bit	W = Writable bit	U = Unimplemented bit, read as '0'	
-n = Value at POR	'1' = Bit is set	'0' = Bit is cleared	x = Bit is unknown

bit 15 **UARTEN:** UARTx Enable bit(1)
- 1 = UARTx is enabled; all UARTx pins are controlled by UARTx as defined by UEN<1:0>
- 0 = UARTx is disabled; all UARTx pins are controlled by port latches; UARTx power consumption minimal

bit 14 **Unimplemented:** Read as '0'

bit 13 **USIDL:** Stop in Idle Mode bit
- 1 = Discontinue module operation when device enters Idle mode
- 0 = Continue module operation in Idle mode

bit 12 **IREN:** IrDA® Encoder and Decoder Enable bit(2)
- 1 = IrDA encoder and decoder enabled
- 0 = IrDA encoder and decoder disabled

bit 11 **RTSMD:** Mode Selection for $\overline{\text{UxRTS}}$ Pin bit
- 1 = $\overline{\text{UxRTS}}$ pin in Simplex mode
- 0 = $\overline{\text{UxRTS}}$ pin in Flow Control mode

bit 10 **Unimplemented:** Read as '0'

bit 9-8 **UEN<1:0>:** UARTx Pin Enable bits
- 11 = UxTX, UxRX and BCLK pins are enabled and used; $\overline{\text{UxCTS}}$ pin controlled by port latches
- 10 = UxTX, UxRX, $\overline{\text{UxCTS}}$ and $\overline{\text{UxRTS}}$ pins are enabled and used
- 01 = UxTX, UxRX and $\overline{\text{UxRTS}}$ pins are enabled and used; $\overline{\text{UxCTS}}$ pin controlled by port latches
- 00 = UxTX and UxRX pins are enabled and used; $\overline{\text{UxCTS}}$ and $\overline{\text{UxRTS}}$/BCLK pins controlled by port latches

bit 7 **WAKE:** Wake-up on Start bit Detect During Sleep Mode Enable bit
- 1 = UARTx will continue to sample the UxRX pin; interrupt generated on falling edge; bit cleared in hardware on following rising edge
- 0 = No wake-up enabled

bit 6 **LPBACK:** UARTx Loopback Mode Select bit
- 1 = Enable Loopback mode
- 0 = Loopback mode is disabled

bit 5 **ABAUD:** Auto-Baud Enable bit
- 1 = Enable baud rate measurement on the next character – requires reception of a Sync field (55h) before other data; cleared in hardware upon completion
- 0 = Baud rate measurement disabled or completed

Note 1: Refer to **Section 17. "UART"** (DS70188) in the *"dsPIC33F/PIC24H Family Reference Manual"* for information on enabling the UART module for receive or transmit operation.

2: This feature is only available for the 16x BRG mode (BRGH = 0).

REGISTER 19-1: UxMODE: UARTx MODE REGISTER (CONTINUED)

bit 4 **URXINV:** Receive Polarity Inversion bit
1 = UxRX Idle state is '0'
0 = UxRX Idle state is '1'

bit 3 **BRGH:** High Baud Rate Enable bit
1 = BRG generates 4 clocks per bit period (4x baud clock, High-Speed mode)
0 = BRG generates 16 clocks per bit period (16x baud clock, Standard mode)

bit 2-1 **PDSEL<1:0>:** Parity and Data Selection bits
11 = 9-bit data, no parity
10 = 8-bit data, odd parity
01 = 8-bit data, even parity
00 = 8-bit data, no parity

bit 0 **STSEL:** Stop Bit Selection bit
1 = Two Stop bits
0 = One Stop bit

Note 1: Refer to **Section 17. "UART"** (DS70188) in the *"dsPIC33F/PIC24H Family Reference Manual"* for information on enabling the UART module for receive or transmit operation.

2: This feature is only available for the 16x BRG mode (BRGH = 0).

© 2007-2012 Microchip Technology Inc.

REGISTER 19-2: UxSTA: UARTx STATUS AND CONTROL REGISTER

R/W-0	R/W-0	R/W-0	U-0	R/W-0 HC	R/W-0	R-0	R-1
UTXISEL1	UTXINV	UTXISEL0	—	UTXBRK	UTXEN(1)	UTXBF	TRMT
bit 15							bit 8

R/W-0	R/W-0	R/W-0	R-1	R-0	R-0	R/C-0	R-0
URXISEL<1:0>		ADDEN	RIDLE	PERR	FERR	OERR	URXDA
bit 7							bit 0

Legend:	HC = Hardware cleared	C = Clear only bit	
R = Readable bit	W = Writable bit	U = Unimplemented bit, read as '0'	
-n = Value at POR	'1' = Bit is set	'0' = Bit is cleared	x = Bit is unknown

bit 15,13 **UTXISEL<1:0>:** Transmission Interrupt Mode Selection bits
- 11 = Reserved; do not use
- 10 = Interrupt when a character is transferred to the Transmit Shift Register, and as a result, the transmit buffer becomes empty
- 01 = Interrupt when the last character is shifted out of the Transmit Shift Register; all transmit operations are completed
- 00 = Interrupt when a character is transferred to the Transmit Shift Register (this implies there is at least one character open in the transmit buffer)

bit 14 **UTXINV:** Transmit Polarity Inversion bit

If IREN = 0:
- 1 = UxTX Idle state is '0'
- 0 = UxTX Idle state is '1'

If IREN = 1:
- 1 = IrDA® encoded UxTX Idle state is '1'
- 0 = IrDA® encoded UxTX Idle state is '0'

bit 12 **Unimplemented:** Read as '0'

bit 11 **UTXBRK:** Transmit Break bit
- 1 = Send Sync Break on next transmission – Start bit, followed by twelve '0' bits, followed by Stop bit; cleared by hardware upon completion
- 0 = Sync Break transmission disabled or completed

bit 10 **UTXEN:** Transmit Enable bit(1)
- 1 = Transmit enabled, UxTX pin controlled by UARTx
- 0 = Transmit disabled, any pending transmission is aborted and buffer is reset. UxTX pin controlled by port

bit 9 **UTXBF:** Transmit Buffer Full Status bit (read-only)
- 1 = Transmit buffer is full
- 0 = Transmit buffer is not full, at least one more character can be written

bit 8 **TRMT:** Transmit Shift Register Empty bit (read-only)
- 1 = Transmit Shift Register is empty and transmit buffer is empty (the last transmission has completed)
- 0 = Transmit Shift Register is not empty, a transmission is in progress or queued

bit 7-6 **URXISEL<1:0>:** Receive Interrupt Mode Selection bits
- 11 = Interrupt is set on UxRSR transfer making the receive buffer full (i.e., has 4 data characters)
- 10 = Interrupt is set on UxRSR transfer making the receive buffer 3/4 full (i.e., has 3 data characters)
- 0x = Interrupt is set when any character is received and transferred from the UxRSR to the receive buffer. Receive buffer has one or more characters

Note 1: Refer to **Section 17. "UART"** (DS70188) in the *"dsPIC33F/PIC24H Family Reference Manual"* for information on enabling the UART module for transmit operation.

REGISTER 19-2: UxSTA: UARTx STATUS AND CONTROL REGISTER (CONTINUED)

bit 5 **ADDEN:** Address Character Detect bit (bit 8 of received data = 1)
1 = Address Detect mode enabled. If 9-bit mode is not selected, this does not take effect
0 = Address Detect mode disabled

bit 4 **RIDLE:** Receiver Idle bit (read-only)
1 = Receiver is Idle
0 = Receiver is active

bit 3 **PERR:** Parity Error Status bit (read-only)
1 = Parity error has been detected for the current character (character at the top of the receive FIFO)
0 = Parity error has not been detected

bit 2 **FERR:** Framing Error Status bit (read-only)
1 = Framing error has been detected for the current character (character at the top of the receive FIFO)
0 = Framing error has not been detected

bit 1 **OERR:** Receive Buffer Overrun Error Status bit (read/clear only)
1 = Receive buffer has overflowed
0 = Receive buffer has not overflowed. Clearing a previously set OERR bit (1 →0 transition) will reset the receiver buffer and the UxRSR to the empty state

bit 0 **URXDA:** Receive Buffer Data Available bit (read-only)
1 = Receive buffer has data, at least one more character can be read
0 = Receive buffer is empty

Note 1: Refer to **Section 17. "UART"** (DS70188) in the *"dsPIC33F/PIC24H Family Reference Manual"* for information on enabling the UART module for transmit operation.

© 2007-2012 Microchip Technology Inc.

20.0 10-BIT/12-BIT ANALOG-TO-DIGITAL CONVERTER (ADC)

Note 1: This data sheet summarizes the features of the dsPIC33FJ32MC202/204 and dsPIC33FJ16MC304 family of devices. It is not intended to be a comprehensive reference source. To complement the information in this data sheet, refer to **Section 16. "Analog-to-Digital Converter (ADC)"** (DS70183) of the *"dsPIC33F/PIC24H Family Reference Manual"*, which is available on the Microchip website (www.microchip.com).

2: Some registers and associated bits described in this section may not be available on all devices. Refer to **Section 4.0 "Memory Organization"** in this data sheet for device-specific register and bit information.

The dsPIC33FJ32MC202/204 and dsPIC33FJ16MC304 devices have up to nine Analog-to-Digital Converter (ADC) module input channels.

The AD12B bit (AD1CON1<10>) allows each of the ADC modules to be configured as either a 10-bit, 4 sample-and-hold ADC (default configuration), or a 12-bit, 1 sample-and-hold ADC.

Note: The ADC module must be disabled before the AD12B bit can be modified.

20.1 Key Features

The 10-bit ADC configuration has the following key features:

- Successive Approximation (SAR) conversion
- Conversion speeds of up to 1.1 Msps
- Up to 9 analog input pins
- External voltage reference input pins
- Simultaneous sampling of up to four analog input pins
- Automatic Channel Scan mode
- Selectable conversion trigger source
- Selectable Buffer Fill modes
- Four result alignment options (signed/unsigned, fractional/integer)
- Operation during CPU Sleep and Idle modes
- 16-word conversion result buffer

The 12-bit ADC configuration supports all the above features, except:

- In the 12-bit configuration, conversion speeds of up to 500 ksps are supported.
- There is only 1 sample-and-hold amplifier in the 12-bit configuration, so simultaneous sampling of multiple channels is not supported.

Depending on the particular device pinout, the ADC can have up to nine analog input pins, designated AN0 through AN8. In addition, there are two analog input pins for external voltage reference connections. These voltage reference inputs can be shared with other analog input pins.

The actual number of analog input pins and external voltage reference input configuration will depend on the specific device. Refer to the device data sheet for further details.

A block diagram of the ADC is shown in Figure 20-1.

20.2 ADC Initialization

To configure the ADC module:

1. Select port pins as analog inputs (AD1PCFGH<15:0> or AD1PCFGL<15:0>).
2. Select voltage reference source to match expected range on analog inputs (AD1CON2<15:13>).
3. Select the analog conversion clock to match the desired data rate with the processor clock (AD1CON3<7:0>).
4. Determine how many sample-and-hold channels will be used (AD1CON2<9:8> and AD1PCFGH<15:0> or AD1PCFGL<15:0>).
5. Select the appropriate sample/conversion sequence (AD1CON1<7:5> and AD1CON3<12:8>).
6. Select the way conversion results are presented in the buffer (AD1CON1<9:8>).
7. Turn on the ADC module (AD1CON1<15>).
8. Configure ADC interrupt (if required):
   a) Clear the AD1IF bit.
   b) Select the ADC interrupt priority.

FIGURE 20-1: ADC1 MODULE BLOCK DIAGRAM FOR dsPIC33FJ16MC304 AND dsPIC33FJ32MC204 DEVICES

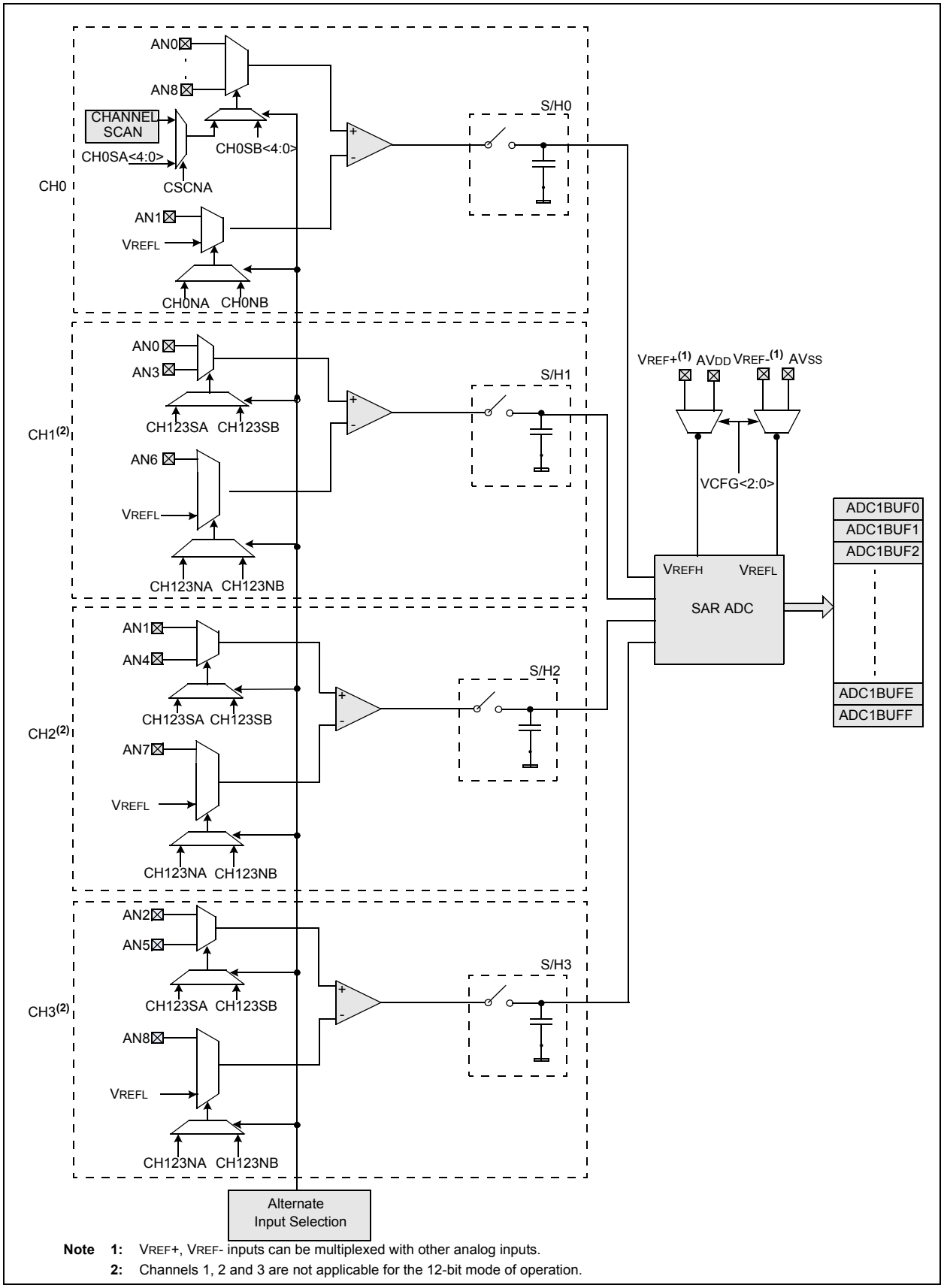

Note 1: VREF+, VREF- inputs can be multiplexed with other analog inputs.

2: Channels 1, 2 and 3 are not applicable for the 12-bit mode of operation.

© 2007-2012 Microchip Technology Inc.

FIGURE 20-2: ADC1 MODULE BLOCK DIAGRAM FOR dsPIC33FJ32MC202 DEVICE

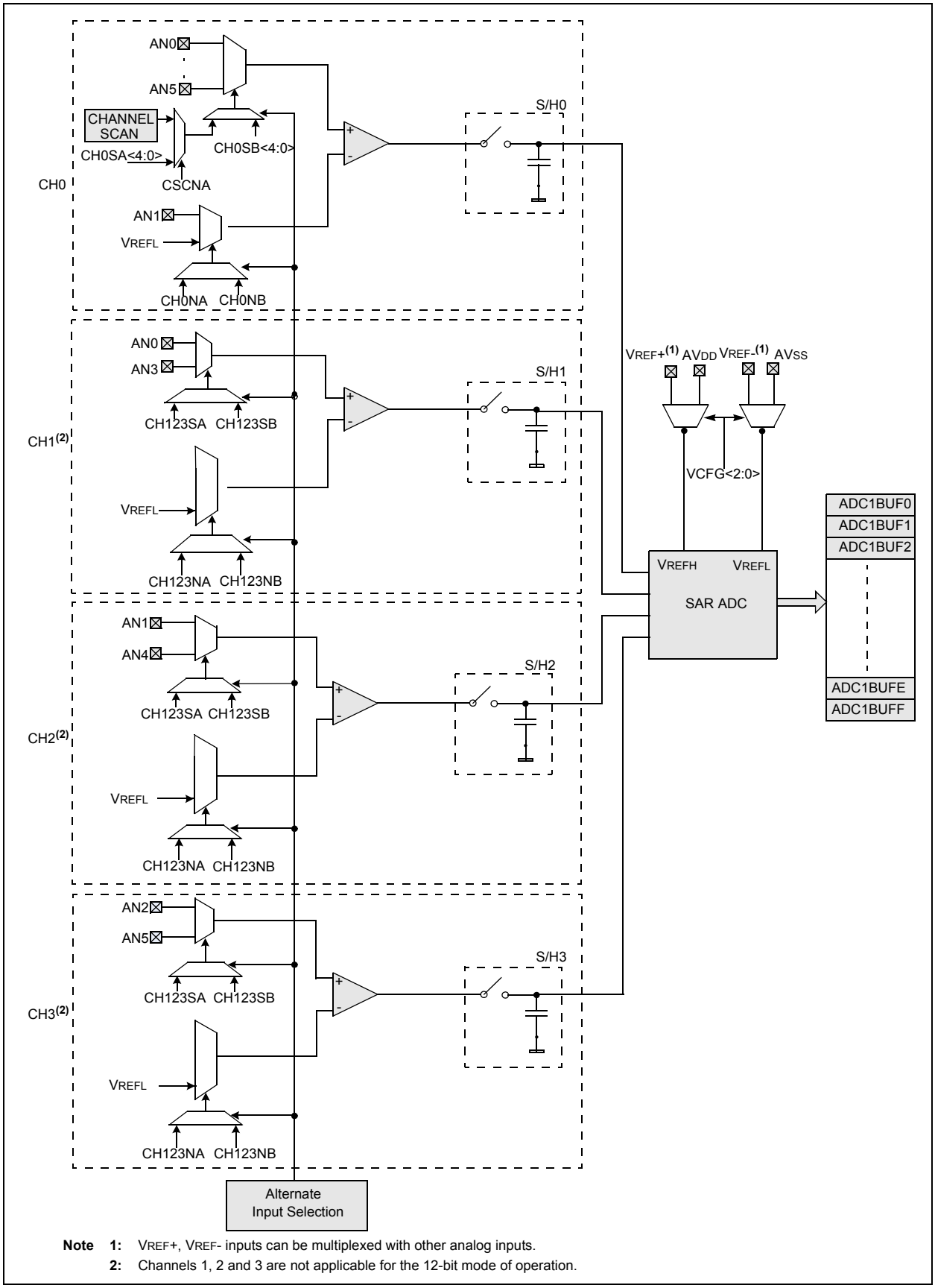

Note 1: VREF+, VREF- inputs can be multiplexed with other analog inputs.

2: Channels 1, 2 and 3 are not applicable for the 12-bit mode of operation.

FIGURE 20-3: ADC CONVERSION CLOCK PERIOD BLOCK DIAGRAM

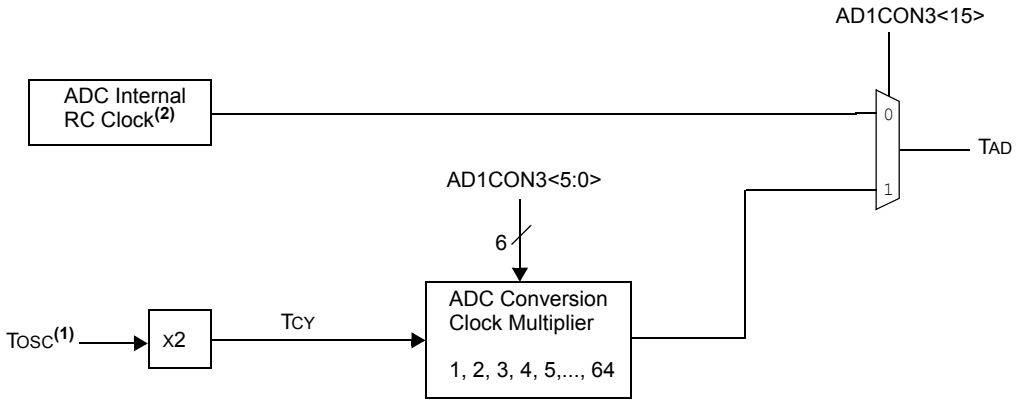

Note 1: Refer to Figure 8-2 for the derivation of FOSC when the PLL is enabled. If the PLL is not used, FOSC is equal to the clock frequency. TOSC = 1/FOSC.

2: See the ADC Electrical Characteristics for the exact RC clock value.

20.3 ADC Helpful Tips

1. The SMPI<3:0> (AD1CON2<5:2>) control bits:
   a) Determine when the ADC interrupt flag is set and an interrupt is generated if enabled.
   b) When the CSCNA bit (AD1CON2<10>) is set to '1', determines when the ADC analog scan channel list defined in the AD1CSSL/AD1CSSH registers starts over from the beginning.
   c) On devices without a DMA peripheral, determines when ADC result buffer pointer to ADC1BUF0-ADC1BUFF, gets reset back to the beginning at ADC1BUF0.
2. On devices without a DMA module, the ADC has 16 result buffers. ADC conversion results are stored sequentially in ADC1BUF0-ADC1BUFF regardless of which analog inputs are being used subject to the SMPI<3:0> bits (AD1CON2<5:2>) and the condition described in 1c above. There is no relationship between the ANx input being measured and which ADC buffer (ADC1BUF0-ADC1BUFF) that the conversion results will be placed in.
3. On devices with a DMA module, the ADC module has only 1 ADC result buffer, (i.e., ADC1BUF0), per ADC peripheral and the ADC conversion result must be read either by the CPU or DMA controller before the next ADC conversion is complete to avoid overwriting the previous value.
4. The DONE bit (AD1CON1<0>) is only cleared at the start of each conversion and is set at the completion of the conversion, but remains set indefinitely even through the next sample phase until the next conversion begins. If application code is monitoring the DONE bit in any kind of software loop, the user must consider this behavior because the CPU code execution is faster than the ADC. As a result, in manual sample mode, particularly where the users code is setting the SAMP bit (AD1CON1<1>), the DONE bit should also be cleared by the user application just before setting the SAMP bit.
5. On devices with two ADC modules, the ADCxPCFG registers for both ADC modules must be set to a logic '1' to configure a target I/O pin as a digital I/O pin. Failure to do so means that any alternate digital input function will always see only a logic '0' as the digital input buffer is held in Disable mode.

20.4 ADC Resources

Many useful resources are provided on the main product page of the Microchip web site for the devices listed in this data sheet. This product page, which can be accessed using this link, contains the latest updates and additional information.

Note: In the event you are not able to access the product page using the link above, enter this URL in your browser: http://www.microchip.com/wwwproducts/Devices.aspx?dDocName=en530334

20.4.1 KEY RESOURCES

- **Section 16. "Analog-to-Digital Converter (ADC)"** (DS70183)
- Code Samples
- Application Notes
- Software Libraries
- Webinars
- All related dsPIC33F/PIC24H Family Reference Manuals Sections
- Development Tools

© 2007-2012 Microchip Technology Inc.

20.5 ADC Control Registers

REGISTER 20-1: AD1CON1: ADC1 CONTROL REGISTER 1

R/W-0	U-0	R/W-0	U-0	U-0	R/W-0	R/W-0	R/W-0
ADON	—	ADSIDL	—	—	AD12B	FORM<1:0>	
bit 15							bit 8

R/W-0	R/W-0	R/W-0	U-0	R/W-0	R/W-0	R/W-0 HC,HS	R/C-0 HC, HS
SSRC<2:0>			—	SIMSAM	ASAM	SAMP	DONE
bit 7							bit 0

Legend:	HC = Cleared by hardware	HS = Set by hardware	C = Clear only bit
R = Readable bit	W = Writable bit	U = Unimplemented bit, read as '0'	
-n = Value at POR	'1' = Bit is set	'0' = Bit is cleared	x = Bit is unknown

bit 15 **ADON:** ADC Operating Mode bit
1 = ADC module is operating
0 = ADC is off

bit 14 **Unimplemented:** Read as '0'

bit 13 **ADSIDL:** Stop in Idle Mode bit
1 = Discontinue module operation when device enters Idle mode
0 = Continue module operation in Idle mode

bit 12-11 **Unimplemented:** Read as '0'

bit 10 **AD12B:** 10-bit or 12-bit Operation Mode bit
1 = 12-bit, 1-channel ADC operation
0 = 10-bit, 4-channel ADC operation

bit 9-8 **FORM<1:0>:** Data Output Format bits
For 10-bit operation:
11 = Signed fractional (DOUT = sddd dddd dd00 0000, where s = .NOT.d<9>)
10 = Fractional (DOUT = dddd dddd dd00 0000)
01 = Signed integer (DOUT = ssss sssd dddd dddd, where s = .NOT.d<9>)
00 = Integer (DOUT = 0000 00dd dddd dddd)
For 12-bit operation:
11 = Signed fractional (DOUT = sddd dddd dddd 0000, where s = .NOT.d<11>)
10 = Fractional (DOUT = dddd dddd dddd 0000)
01 = Signed Integer (DOUT = ssss sddd dddd dddd, where s = .NOT.d<11>)
00 = Integer (DOUT = 0000 dddd dddd dddd)

bit 7-5 **SSRC<2:0>:** Sample Clock Source Select bits
111 = Internal counter ends sampling and starts conversion (auto-convert)
110 = Reserved
101 = Motor Control PWM2 interval ends sampling and starts conversion
100 = Reserved
011 = Motor Control PWM1 interval ends sampling and starts conversion
010 = GP timer 3 compare ends sampling and starts conversion
001 = Active transition on INT0 pin ends sampling and starts conversion
000 = Clearing sample bit ends sampling and starts conversion

bit 4 **Unimplemented:** Read as '0'

bit 3 **SIMSAM:** Simultaneous Sample Select bit (applicable only when CHPS<1:0> = 01 or 1x)
When AD12B = 1, SIMSAM is: U-0, Unimplemented, Read as '0'
1 = Samples CH0, CH1, CH2, CH3 simultaneously (when CHPS<1:0> = 1x); or
Samples CH0 and CH1 simultaneously (when CHPS<1:0> = 01)
0 = Samples multiple channels individually in sequence

REGISTER 20-1: AD1CON1: ADC1 CONTROL REGISTER 1 (CONTINUED)

bit 2 **ASAM:** ADC Sample Auto-Start bit

1 = Sampling begins immediately after last conversion. SAMP bit is auto-set
0 = Sampling begins when SAMP bit is set

bit 1 **SAMP:** ADC Sample Enable bit

1 = ADC sample-and-hold amplifiers are sampling
0 = ADC sample-and-hold amplifiers are holding
If ASAM = 0, software can write '1' to begin sampling. Automatically set by hardware if ASAM = 1.
If SSRC = 000, software can write '0' to end sampling and start conversion. If SSRC ≠ 000, automatically cleared by hardware to end sampling and start conversion.

bit 0 **DONE:** ADC Conversion Status bit

1 = ADC conversion cycle is completed
0 = ADC conversion not started or in progress
Automatically set by hardware when ADC conversion is complete. Software can write '0' to clear DONE status (software not allowed to write '1'). Clearing this bit will NOT affect any operation in progress. Automatically cleared by hardware at start of a new conversion.

© 2007-2012 Microchip Technology Inc.

REGISTER 20-2: AD1CON2: ADC1 CONTROL REGISTER 2

R/W-0	R/W-0	R/W-0	U-0	U-0	R/W-0	R/W-0	R/W-0
VCFG<2:0>			—	—	CSCNA	CHPS<1:0>	
bit 15							bit 8

R-0	U-0	R/W-0	R/W-0	R/W-0	R/W-0	R/W-0	R/W-0
BUFS	—	SMPI<3:0>				BUFM	ALTS
bit 7							bit 0

Legend:			
R = Readable bit	W = Writable bit	U = Unimplemented bit, read as '0'	
-n = Value at POR	'1' = Bit is set	'0' = Bit is cleared	x = Bit is unknown

bit 15-13 **VCFG<2:0>:** Converter Voltage Reference Configuration bits

	ADREF+	ADREF-
000	AVDD	AVSS
001	External VREF+	AVSS
010	AVDD	External VREF-
011	External VREF+	External VREF-
1xx	AVDD	AVSS

bit 12-11 **Unimplemented:** Read as '0'

bit 10 **CSCNA:** Scan Input Selections for CH0+ during Sample A bit
1 = Scan inputs
0 = Do not scan inputs

bit 9-8 **CHPS<1:0>:** Select Channels Utilized bits
When AD12B = 1, CHPS<1:0> is: U-0, Unimplemented, Read as '0'
1x = Converts CH0, CH1, CH2 and CH3
01 = Converts CH0 and CH1
00 = Converts CH0

bit 7 **BUFS:** Buffer Fill Status bit (valid only when BUFM = 1)
1 = ADC is currently filling second half of buffer, user should access data in the first half
0 = ADC is currently filling first half of buffer, user application should access data in the second half

bit 6 **Unimplemented:** Read as '0'

bit 5-2 **SMPI<3:0>:** Sample/Convert Sequences Per Interrupt Selection bits
1111 = Interrupts at the completion of conversion for each 16th sample/convert sequence
1110 = Interrupts at the completion of conversion for each 15th sample/convert sequence
•
•
•
0001 = Interrupts at the completion of conversion for each 2nd sample/convert sequence
0000 = Interrupts at the completion of conversion for each sample/convert sequence

bit 1 **BUFM:** Buffer Fill Mode Select bit
1 = Starts filling first half of buffer on first interrupt and the second half of buffer on next interrupt
0 = Always starts filling buffer from the beginning

bit 0 **ALTS:** Alternate Input Sample Mode Select bit
1 = Uses channel input selects for Sample A on first sample and Sample B on next sample
0 = Always uses channel input selects for Sample A

REGISTER 20-3: AD1CON3: ADC1 CONTROL REGISTER 3

R/W-0	U-0	U-0	R/W-0	R/W-0	R/W-0	R/W-0	R/W-0
ADRC	—	—	SAMC<4:0>(1)				
bit 15							bit 8

U-0	U-0	R/W-0	R/W-0	R/W-0	R/W-0	R/W-0	R/W-0
ADCS<7:0>(2)							
bit 7							bit 0

Legend:			
R = Readable bit	W = Writable bit	U = Unimplemented bit, read as '0'	
-n = Value at POR	'1' = Bit is set	'0' = Bit is cleared	x = Bit is unknown

bit 15 **ADRC:** ADC Conversion Clock Source bit
1 = ADC internal RC clock
0 = Clock derived from system clock

bit 14-13 **Unimplemented:** Read as '0'

bit 12-8 **SAMC<4:0>:** Auto Sample Time bits(1)
11111 = 31 TAD
•
•
•
00001 = 1 TAD
00000 = 0 TAD

bit 7-0 **ADCS<7:0>:** ADC Conversion Clock Select bits(2)
11111111 = Reserved
•
•
•
•
01000000 = Reserved
00111111 = TCY · (ADCS<7:0> + 1) = 64 · TCY = TAD
•
•
•
00000010 = TCY · (ADCS<7:0> + 1) = 3 · TCY = TAD
00000001 = TCY · (ADCS<7:0> + 1) = 2 · TCY = TAD
00000000 = TCY · (ADCS<7:0> + 1) = 1 · TCY = TAD

Note 1: This bit only used if AD1CON1<7:5> (SSRC2:0) = 111.
2: This bit is not used if AD1CON3<15> (ADRC) = 1.

© 2007-2012 Microchip Technology Inc.

REGISTER 20-4: AD1CHS123: ADC1 INPUT CHANNEL 1, 2, 3 SELECT REGISTER

U-0	U-0	U-0	U-0	U-0	R/W-0	R/W-0	R/W-0
—	—	—	—	—	CH123NB<1:0>		CH123SB
bit 15							bit 8

U-0	U-0	U-0	U-0	U-0	R/W-0	R/W-0	R/W-0
—	—	—	—	—	CH123NA<1:0>		CH123SA
bit 7							bit 0

Legend:			
R = Readable bit	W = Writable bit	U = Unimplemented bit, read as '0'	
-n = Value at POR	'1' = Bit is set	'0' = Bit is cleared	x = Bit is unknown

bit 15-11 **Unimplemented:** Read as '0'

bit 10-9 **CH123NB<1:0>:** Channel 1, 2, 3 Negative Input Select for Sample B bits

dsPIC33FJ32MC202 devices only:

If AD12B = 1:
11 = Reserved
10 = Reserved
01 = Reserved
00 = Reserved

If AD12B = 0:
11 = Reserved
10 = Reserved
01 = CH1, CH2, CH3 negative input is VREF-
00 = CH1, CH2, CH3 negative input is VREF-

dsPIC33FJ32MC204 and dsPIC33FJ16MC304 devices only:

If AD12B = 1:
11 = Reserved
10 = Reserved
01 = Reserved
00 = Reserved

If AD12B = 0:
11 = Reserved
10 = CH1 negative input is AN6, CH2 negative input is AN7, CH3 negative input is AN8
01 = CH1, CH2, CH3 negative input is VREF-
00 = CH1, CH2, CH3 negative input is VREF-

bit 8 **CH123SB:** Channel 1, 2, 3 Positive Input Select for Sample B bit

If AD12B = 1:
1 = Reserved
0 = Reserved

If AD12B = 0:
1 = CH1 positive input is AN3, CH2 positive input is AN4, CH3 positive input is AN5
0 = CH1 positive input is AN0, CH2 positive input is AN1, CH3 positive input is AN2

bit 7-3 **Unimplemented:** Read as '0'

REGISTER 20-4: AD1CHS123: ADC1 INPUT CHANNEL 1, 2, 3 SELECT REGISTER (CONTINUED)

bit 2-1 **CH123NA<1:0>:** Channel 1, 2, 3 Negative Input Select for Sample A bits

dsPIC33FJ32MC202 devices only:

If AD12B = 1:
11 = Reserved
10 = Reserved
01 = Reserved
00 = Reserved

If AD12B = 0:
11 = Reserved
10 = Reserved
01 = CH1, CH2, CH3 negative input is VREF-
00 = CH1, CH2, CH3 negative input is VREF-

dsPIC33FJ32MC204 and dsPIC33FJ16MC304 devices only:

If AD12B = 1:
11 = Reserved
10 = Reserved
01 = Reserved
00 = Reserved

If AD12B = 0:
11 = Reserved
10 = CH1 negative input is AN6, CH2 negative input is AN7, CH3 negative input is AN8
01 = CH1, CH2, CH3 negative input is VREF-
00 = CH1, CH2, CH3 negative input is VREF-

bit 0 **CH123SA:** Channel 1, 2, 3 Positive Input Select for Sample A bit

If AD12B = 1:
1 = Reserved
0 = Reserved

If AD12B = 0:
1 = CH1 positive input is AN3, CH2 positive input is AN4, CH3 positive input is AN5
0 = CH1 positive input is AN0, CH2 positive input is AN1, CH3 positive input is AN2

© 2007-2012 Microchip Technology Inc.

REGISTER 20-5: AD1CHS0: ADC1 INPUT CHANNEL 0 SELECT REGISTER

R/W-0	U-0	U-0	R/W-0	R/W-0	R/W-0	R/W-0	R/W-0
CH0NB	—	—	CH0SB<4:0>				
bit 15							bit 8

R/W-0	U-0	U-0	R/W-0	R/W-0	R/W-0	R/W-0	R/W-0
CH0NA	—	—	CH0SA<4:0>				
bit 7							bit 0

Legend:			
R = Readable bit	W = Writable bit	U = Unimplemented bit, read as '0'	
-n = Value at POR	'1' = Bit is set	'0' = Bit is cleared	x = Bit is unknown

bit 15 **CH0NB:** Channel 0 Negative Input Select for Sample B bit
1 = Channel 0 negative input is AN1
0 = Channel 0 negative input is VREF-

bit 14-13 **Unimplemented:** Read as '0'

bit 12-8 **CH0SB<4:0>:** Channel 0 Positive Input Select for Sample B bits
dsPIC33FJ32MC204 and dsPIC33FJ16MC304 devices only:
01000 = Channel 0 positive input is AN8
•
•
•
00010 = Channel 0 positive input is AN2
00001 = Channel 0 positive input is AN1
00000 = Channel 0 positive input is AN0

dsPIC33FJ32MC202 devices only:
00101 = Channel 0 positive input is AN5
•
•
•
00010 = Channel 0 positive input is AN2
00001 = Channel 0 positive input is AN1
00000 = Channel 0 positive input is AN0.

bit 7 **CH0NA:** Channel 0 Negative Input Select for Sample A bit
1 = Channel 0 negative input is AN1
0 = Channel 0 negative input is VREF-

bit 6-5 **Unimplemented:** Read as '0'

bit 4-0 **CH0SA<4:0>:** Channel 0 Positive Input Select for Sample A bits
dsPIC33FJ32MC204 and dsPIC33FJ16MC304 devices only:
01000 = Channel 0 positive input is AN8
•
•
•
00010 = Channel 0 positive input is AN2
00001 = Channel 0 positive input is AN1
00000 = Channel 0 positive input is AN0

dsPIC33FJ32MC202 devices only:
00101 = Channel 0 positive input is AN5
•
•
•
00010 = Channel 0 positive input is AN2
00001 = Channel 0 positive input is AN1
00000 = Channel 0 positive input is AN0

REGISTER 20-6: AD1CSSL: ADC1 INPUT SCAN SELECT REGISTER LOW(1,2)

U-0	U-0	U-0	U-0	U-0	U-0	U-0	R/W-0
—	—	—	—	—	—	—	CSS8
bit 15							bit 8

R/W-0	R/W-0	R/W-0	R/W-0	R/W-0	R/W-0	R/W-0	R/W-0
CSS7	CSS6	CSS5	CSS4	CSS3	CSS2	CSS1	CSS0
bit 7							bit 0

Legend:			
R = Readable bit	W = Writable bit	U = Unimplemented bit, read as '0'	
-n = Value at POR	'1' = Bit is set	'0' = Bit is cleared	x = Bit is unknown

bit 15-9 **Unimplemented:** Read as '0'

bit 8-0 **CSS<8:0>:** ADC Input Scan Selection bits
1 = Select ANx for input scan
0 = Skip ANx for input scan

Note 1: On devices without 9 analog inputs, all AD1CSSL bits can be selected by the user application. However, inputs selected for scan without a corresponding input on device converts VREFL.

2: CSSx = ANx, where x = 0 through 8.

REGISTER 20-7: AD1PCFGL: ADC1 PORT CONFIGURATION REGISTER LOW(1,2,3)

U-0	U-0	U-0	U-0	U-0	U-0	U-0	R/W-0
—	—	—	—	—	—	—	PCFG8
bit 15							bit 8

R/W-0	R/W-0	R/W-0	R/W-0	R/W-0	R/W-0	R/W-0	R/W-0
PCFG7	PCFG6	PCFG5	PCFG4	PCFG3	PCFG2	PCFG1	PCFG0
bit 7							bit 0

Legend:			
R = Readable bit	W = Writable bit	U = Unimplemented bit, read as '0'	
-n = Value at POR	'1' = Bit is set	'0' = Bit is cleared	x = Bit is unknown

bit 15-9 **Unimplemented:** Read as '0'

bit 8-0 **PCFG<8:0>:** ADC Port Configuration Control bits
1 = Port pin in Digital mode, port read input enabled, ADC input multiplexer connected to AVSS
0 = Port pin in Analog mode, port read input disabled, ADC samples pin voltage

Note 1: On devices without 9 analog inputs, all PCFG bits are R/W by user software. However, the PCFG bits are ignored on ports without a corresponding input on device.

2: PCFGx = ANx, where x = 0 through 8.

3: The PCFGx bits have no effect if the ADC module is disabled by setting ADxMD bit in the PMDx Register. In this case, all port pins multiplexed with ANx will be in Digital mode.

© 2007-2012 Microchip Technology Inc.

21.0 SPECIAL FEATURES

Note: This data sheet summarizes the features of the dsPIC33FJ32MC202/204 and dsPIC33FJ16MC304 devices. It is not intended to be a comprehensive reference source. To complement the information in this data sheet, refer to the *"dsPIC33F/PIC24H Family Reference Manual"*. Please see the Microchip web site (www.microchip.com) for the latest dsPIC33F/PIC24H Family Reference Manual sections.

dsPIC33FJ32MC202/204 and dsPIC33FJ16MC304 devices include several features intended to maximize application flexibility and reliability, and minimize cost through elimination of external components. These are:

- Flexible configuration
- Watchdog Timer (WDT)
- Code Protection and CodeGuard™ Security
- JTAG Boundary Scan Interface
- In-Circuit Serial Programming™ (ICSP™)
- In-Circuit emulation

21.1 Configuration Bits

dsPIC33FJ32MC202/204 and dsPIC33FJ16MC304 devices provide nonvolatile memory implementation for device configuration bits. Refer to **Section 25. "Device Configuration"** (DS70194) of the *"dsPIC33F/PIC24H Family Reference Manual"*, for more information on this implementation.

The Configuration bits can be programmed (read as '0'), or left unprogrammed (read as '1'), to select various device configurations. These bits are mapped starting at program memory location 0xF80000.

The individual Configuration bit descriptions for the Configuration registers are shown in Table 21-2.

Note that address 0xF80000 is beyond the user program memory space. It belongs to the configuration memory space (0x800000-0xFFFFFF), which can only be accessed using table reads and table writes.

The Device Configuration register map is shown in Table 21-1.

TABLE 21-1: DEVICE CONFIGURATION REGISTER MAP

Address	Name	Bit 7	Bit 6	Bit 5	Bit 4	Bit 3	Bit 2	Bit 1	Bit 0
0xF80000	FBS	—	—	—	—	BSS<2:0>			BWRP
0xF80002	RESERVED	—	—	—	—	—	—	—	—
0xF80004	FGS	—	—	—	—	—	GSS<1:0>		GWRP
0xF80006	FOSCSEL	IESO	—	—	—		FNOSC<2:0>		
0xF80008	FOSC	FCKSM<1:0>		IOL1WAY	—	—	OSCIOFNC	POSCMD<1:0>	
0xF8000A	FWDT	FWDTEN	WINDIS	—	WDTPRE	WDTPOST<3:0>			
0xF8000C	FPOR	PWMPIN	HPOL	LPOL	ALTI2C	—	FPWRT<2:0>		
0xF8000E	FICD	Reserved(1)		JTAGEN	—	—	—	ICS<1:0>	
0xF80010	FUID0	User Unit ID Byte 0							
0xF80012	FUID1	User Unit ID Byte 1							
0xF80014	FUID2	User Unit ID Byte 2							
0xF80016	FUID3	User Unit ID Byte 3							

Legend: — = unimplemented bit, read as '0'.

Note 1: These bits are reserved for use by development tools and must be programmed as '1'.

TABLE 21-2: CONFIGURATION BITS DESCRIPTION

Bit Field	Register	RTSP Effect	Description
BWRP	FBS	Immediate	Boot Segment Program Flash Write Protection 1 = Boot segment can be written 0 = Boot segment is write-protected
BSS<2:0>	FBS	Immediate	**dsPIC33FJ32MC202 and dsPIC33FJ32MC204 Devices Only** Boot Segment Program Flash Code Protection Size X11 = No Boot program Flash segment Boot space is 768 Instruction Words (except interrupt vectors) 110 = Standard security; boot program Flash segment ends at 0x0007FE 010 = High security; boot program Flash segment ends at 0x0007FE Boot space is 3840 Instruction Words (except interrupt vectors) 101 = Standard security; boot program Flash segment, ends at 0x001FFE 001 = High security; boot program Flash segment ends at 0x001FFE Boot space is 7936 Instruction Words (except interrupt vectors) 100 = Standard security; boot program Flash segment ends at 0x003FFE 000 = High security; boot program Flash segment ends at 0x003FFE
BSS<2:0>	FBS	Immediate	**dsPIC33FJ16MC304 Device Only** Boot Segment Program Flash Code Protection Size X11 = No Boot program Flash segment Boot space is 768 Instruction Words (except interrupt vectors) 110 = Standard security; boot program Flash segment ends at 0x0007FE 010 = High security; boot program Flash segment ends at 0x0007FE Boot space is 3840 Instruction Words (except interrupt vectors) 101 = Standard security; boot program Flash segment, ends at 0x001FFE 001 = High security; boot program Flash segment ends at 0x001FFE Boot space is 5376 Instruction Words (except interrupt vectors) 100 = Standard security; boot program Flash segment ends at 0x002BFE 000 = High security; boot program Flash segment ends at 0x002BFE
GSS<1:0>	FGS	Immediate	General Segment Code-Protect bit 11 = User program memory is not code-protected 10 = Standard security 0x = High security
GWRP	FGS	Immediate	General Segment Write-Protect bit 1 = User program memory is not write-protected 0 = User program memory is write-protected
IESO	FOSCSEL	Immediate	Two-speed Oscillator Start-up Enable bit 1 = Start-up device with FRC, then automatically switch to the user-selected oscillator source when ready 0 = Start-up device with user-selected oscillator source
FNOSC<2:0>	FOSCSEL	If clock switch is enabled, RTSP effect is on any device Reset; otherwise, Immediate	Initial Oscillator Source Selection bits 111 = Internal Fast RC (FRC) oscillator with postscaler 110 = Internal Fast RC (FRC) oscillator with divide-by-16 101 = LPRC oscillator 100 = Secondary (LP) oscillator 011 = Primary (XT, HS, EC) oscillator with PLL 010 = Primary (XT, HS, EC) oscillator 001 = Internal Fast RC (FRC) oscillator with PLL 000 = FRC oscillator

© 2007-2012 Microchip Technology Inc.

TABLE 21-2: CONFIGURATION BITS DESCRIPTION (CONTINUED)

Bit Field	Register	RTSP Effect	Description
FCKSM<1:0>	FOSC	Immediate	Clock Switching Mode bits 1x = Clock switching is disabled, Fail-Safe Clock Monitor is disabled 01 = Clock switching is enabled, Fail-Safe Clock Monitor is disabled 00 = Clock switching is enabled, Fail-Safe Clock Monitor is enabled
IOL1WAY	FOSC	Immediate	Peripheral pin select configuration 1 = Allow only one reconfiguration 0 = Allow multiple reconfigurations
OSCIOFNC	FOSC	Immediate	OSC2 Pin Function bit (except in XT and HS modes) 1 = OSC2 is clock output 0 = OSC2 is general purpose digital I/O pin
POSCMD<1:0>	FOSC	Immediate	Primary Oscillator Mode Select bits 11 = Primary oscillator disabled 10 = HS Crystal Oscillator mode 01 = XT Crystal Oscillator mode 00 = EC (External Clock) mode
FWDTEN	FWDT	Immediate	Watchdog Timer Enable bit 1 = Watchdog Timer always enabled (LPRC oscillator cannot be disabled. Clearing the SWDTEN bit in the RCON register will have no effect.) 0 = Watchdog Timer enabled/disabled by user software (LPRC can be disabled by clearing the SWDTEN bit in the RCON register)
WINDIS	FWDT	Immediate	Watchdog Timer Window Enable bit 1 = Watchdog Timer in Non-Window mode 0 = Watchdog Timer in Window mode
WDTPRE	FWDT	Immediate	Watchdog Timer Prescaler bit 1 = 1:128 0 = 1:32
WDTPOST<3:0>	FWDT	Immediate	Watchdog Timer Postscaler bits 1111 = 1:32,768 1110 = 1:16,384 • • • 0001 = 1:2 0000 = 1:1
PWMPIN	FPOR	Immediate	Motor Control PWM Module Pin Mode bit 1 = PWM module pins controlled by PORT register at device Reset (tri-stated) 0 = PWM module pins controlled by PWM module at device Reset (configured as output pins)

TABLE 21-2: CONFIGURATION BITS DESCRIPTION (CONTINUED)

Bit Field	Register	RTSP Effect	Description
HPOL	FPOR	Immediate	Motor Control PWM High Side Polarity bit 1 = PWM module high side output pins have active-high output polarity 0 = PWM module high side output pins have active-low output polarity
LPOL	FPOR	Immediate	Motor Control PWM Low Side Polarity bit 1 = PWM module low side output pins have active-high output polarity 0 = PWM module low side output pins have active-low output polarity
FPWRT<2:0>	FPOR	Immediate	Power-on Reset Timer Value Select bits 111 = PWRT = 128 ms 110 = PWRT = 64 ms 101 = PWRT = 32 ms 100 = PWRT = 16 ms 011 = PWRT = 8 ms 010 = PWRT = 4 ms 001 = PWRT = 2 ms 000 = PWRT = Disabled
ALTI2C	FPOR	Immediate	Alternate I^2C™ pins 1 = I^2C mapped to SDA1/SCL1 pins 0 = I^2C mapped to ASDA1/ASCL1 pins
JTAGEN	FICD	Immediate	JTAG Enable bit 1 = JTAG enabled 0 = JTAG disabled
ICS<1:0>	FICD	Immediate	ICD Communication Channel Select bits 11 = Communicate on PGEC1 and PGED1 10 = Communicate on PGEC2 and PGED2 01 = Communicate on PGEC3 and PGED3 00 = Reserved, do not use

© 2007-2012 Microchip Technology Inc.

21.2 On-Chip Voltage Regulator

The dsPIC33FJ32MC202/204 and dsPIC33FJ16MC304 devices power their core digital logic at a nominal 2.5V. This can create a conflict for designs that are required to operate at a higher typical voltage, such as 3.3V. To simplify system design, all devices in the dsPIC33FJ32MC202/204 and dsPIC33FJ16MC304 family incorporate an on-chip regulator that allows the device to run its core logic from VDD.

The regulator provides power to the core from the other VDD pins. When the regulator is enabled, a low-ESR (less than 5 ohms) capacitor (such as tantalum or ceramic) must be connected to the VCAP pin (Figure 21-1). This helps to maintain the stability of the regulator. The recommended value for the filter capacitor is provided in Table 24-13 located in **Section 24.1 "DC Characteristics"**.

Note:	It is important for low-ESR capacitors to be placed as close as possible to the VCAP pin.

On a POR, it takes approximately 20 µs for the on-chip voltage regulator to generate an output voltage. During this time, designated as TSTARTUP, code execution is disabled. TSTARTUP is applied every time the device resumes operation after any power-down.

FIGURE 21-1: CONNECTIONS FOR THE ON-CHIP VOLTAGE REGULATOR(1,2,3)

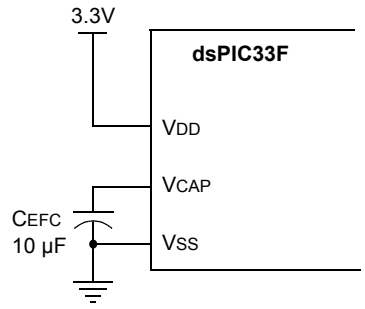

Note 1: These are typical operating voltages. Refer to Table 24-13 located in **Section 24.1 "DC Characteristics"** for the full operating ranges of VDD and VCAP.

2: It is important for low-ESR capacitors to be placed as close as possible to the VCAP pin.

3: Typical VCAP pin voltage = 2.5V when VDD ≥ VDDMIN.

21.3 BOR: Brown-out Reset (BOR)

The Brown-out Reset (BOR) module is based on an internal voltage reference circuit that monitors the regulated supply voltage VCAP. The main purpose of the BOR module is to generate a device Reset when a brown-out condition occurs. Brown-out conditions are generally caused by glitches on the AC mains (for example, missing portions of the AC cycle waveform due to bad power transmission lines, or voltage sags due to excessive current draw when a large inductive load is turned on).

A BOR generates a Reset pulse, which resets the device. The BOR selects the clock source, based on the device Configuration bit values (FNOSC<2:0> and POSCMD<1:0>).

If an oscillator mode is selected, the BOR activates the Oscillator Start-up Timer (OST). The system clock is held until OST expires. If the PLL is used, the clock is held until the LOCK bit (OSCCON<5>) is '1'.

Concurrently, the PWRT time-out (TPWRT) is applied before the internal Reset is released. If TPWRT = 0 and a crystal oscillator is being used, then a nominal delay of TFSCM = 100 is applied. The total delay in this case is TFSCM.

The BOR Status bit (RCON<1>) is set to indicate that a BOR has occurred. The BOR circuit continues to operate while in Sleep or Idle modes and resets the device should VDD fall below the BOR threshold voltage.

21.4 Watchdog Timer (WDT)

For dsPIC33FJ32MC202/204 and dsPIC33FJ16MC304 devices, the WDT is driven by the LPRC oscillator. When the WDT is enabled, the clock source is also enabled.

21.4.1 PRESCALER/POSTSCALER

The nominal WDT clock source from LPRC is 32 kHz. This feeds a prescaler than can be configured for either 5-bit (divide-by-32) or 7-bit (divide-by-128) operation. The prescaler is set by the WDTPRE Configuration bit. With a 32 kHz input, the prescaler yields a nominal WDT time-out period (TWDT) of 1 ms in 5-bit mode, or 4 ms in 7-bit mode.

A variable postscaler divides down the WDT prescaler output and allows for a wide range of time-out periods. The postscaler is controlled by the WDTPOST<3:0> Configuration bits (FWDT<3:0>), which allow the selection of 16 settings, from 1:1 to 1:32,768. Using the prescaler and postscaler, time-out periods ranging from 1 ms to 131 seconds can be achieved.

The WDT, prescaler and postscaler are reset:

- On any device Reset
- On the completion of a clock switch, whether invoked by software (i.e., setting the OSWEN bit after changing the NOSC bits) or by hardware (i.e., Fail-Safe Clock Monitor)
- When a PWRSAV instruction is executed (i.e., Sleep or Idle mode is entered)
- When the device exits Sleep or Idle mode to resume normal operation
- By a CLRWDT instruction during normal execution

Note:	The CLRWDT and PWRSAV instructions clear the prescaler and postscaler counts when executed.

21.4.2 SLEEP AND IDLE MODES

If the WDT is enabled, it will continue to run during Sleep or Idle modes. When the WDT time-out occurs, the device will wake the device and code execution will continue from where the PWRSAV instruction was executed. The corresponding SLEEP or IDLE bits (RCON<3,2>) will need to be cleared in software after the device wakes up.

21.4.3 ENABLING WDT

The WDT is enabled or disabled by the FWDTEN Configuration bit in the FWDT Configuration register. When the FWDTEN Configuration bit is set, the WDT is always enabled.

The WDT can be optionally controlled in software when the FWDTEN Configuration bit has been programmed to '0'. The WDT is enabled in software by setting the SWDTEN control bit (RCON<5>). The SWDTEN control bit is cleared on any device Reset. The software WDT option allows the user application to enable the WDT for critical code segments and disable the WDT during non-critical segments for maximum power savings.

Note:	If the WINDIS bit (FWDT<6>) is cleared, the CLRWDT instruction should be executed by the application software only during the last 1/4 of the WDT period. This CLRWDT window can be determined by using a timer. If a CLRWDT instruction is executed before this window, a WDT Reset occurs.

The WDT flag bit, WDTO (RCON<4>), is not automatically cleared following a WDT time-out. To detect subsequent WDT events, the flag must be cleared in software.

FIGURE 21-2: WDT BLOCK DIAGRAM

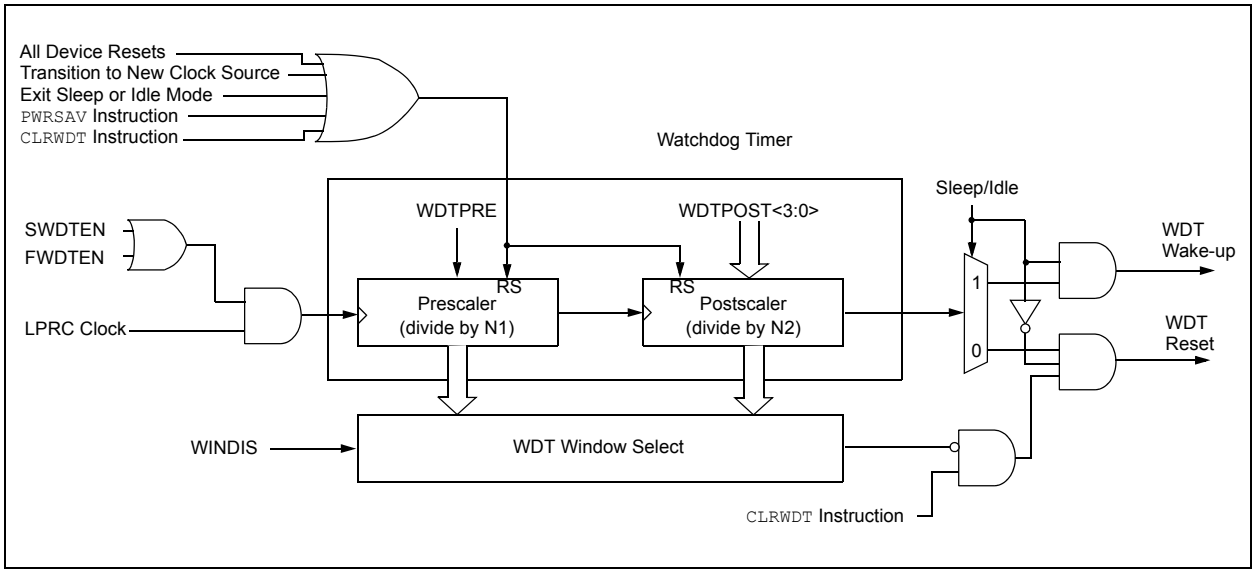

© 2007-2012 Microchip Technology Inc.

21.5 JTAG Interface

dsPIC33FJ32MC202/204 and dsPIC33FJ16MC304 devices implement a JTAG interface, which supports boundary scan device testing, as well as in-circuit programming. Detailed information on this interface will be provided in future revisions of the document.

21.6 In-Circuit Serial Programming

dsPIC33FJ32MC202/204 and dsPIC33FJ16MC304 family digital signal controllers can be serially programmed while in the end application circuit. This is done with two lines for clock and data and three other lines for power, ground and the programming sequence. Serial programming allows customers to manufacture boards with unprogrammed devices and then program the digital signal controller just before shipping the product. Serial programming also allows the most recent firmware or a custom firmware to be programmed. Refer to the *"dsPIC33F/PIC24H Flash Programming Specification"* (DS70152) document for details about In-Circuit Serial Programming (ICSP).

Any of the three pairs of programming clock/data pins can be used:

- PGEC1 and PGED1
- PGEC2 and PGED2
- PGEC3 and PGED3

21.7 In-Circuit Debugger

When MPLAB® ICD 2 is selected as a debugger, the in-circuit debugging functionality is enabled. This function allows simple debugging functions when used with MPLAB IDE. Debugging functionality is controlled through the PGECx (Emulation/Debug Clock) and PGEDx (Emulation/Debug Data) pin functions.

Any of the three pairs of debugging clock/data pins can be used:

- PGEC1 and PGED1
- PGEC2 and PGED2
- PGEC3 and PGED3

To use the in-circuit debugger function of the device, the design must implement ICSP connections to $\overline{MCLR}$, V_{DD}, V_{SS}, and the PGECx/PGEDx pin pair. In addition, when the feature is enabled, some of the resources are not available for general use. These resources include the first 80 bytes of data RAM and two I/O pins.

21.8 Code Protection and CodeGuard™ Security

The dsPIC33FJ32MC202/204 and dsPIC33FJ16MC304 devices offer the intermediate implementation of CodeGuard™ Security. CodeGuard Security enables multiple parties to securely share resources (memory, interrupts and peripherals) on a single chip. This feature helps protect individual Intellectual Property in collaborative system designs.

When coupled with software encryption libraries, CodeGuard™ Security can be used to securely update Flash even when multiple IPs reside on the single chip.

The code protection features are controlled by the Configuration registers: FBS and FGS.

Secure segment and RAM protection is not implemented in dsPIC33FJ32MC202/204 and dsPIC33FJ16MC304 devices.

Note:	Refer to **Section 23. *"CodeGuard™ Security"*** (DS70199) in the *"dsPIC33F/PIC24H Family Reference Manual"* for further information on usage, configuration and operation of CodeGuard Security.

TABLE 21-3: CODE FLASH SECURITY SEGMENT SIZES FOR 32 KBYTE DEVICES

CONFIG BITS		
BSS<2:0>=x11 **0K**	VS = 256 IW GS = 11008 IW	0x000000 0x0001FE 0x000200 0x0007FE 0x000800 0x001FFE 0x002000 0x003FFE 0x004000 0x0057FE
BSS<2:0>=x10 **256**	VS = 256 IW BS = 768 IW GS = 10240 IW	0x000000 0x0001FE 0x000200 0x0007FE 0x000800 0x001FFE 0x002000 0x003FFE 0x004000 0x0057FE
BSS<2:0>=x01 **768**	VS = 256 IW BS = 3840 IW GS = 7168 IW	0x000000 0x0001FE 0x000200 0x0007FE 0x000800 0x001FFE 0x002000 0x003FFE 0x004000 0x0057FE
BSS<2:0>=x00 **1792**	VS = 256 IW BS = 7936 IW GS = 3072 IW	0x000000 0x0001FE 0x000200 0x0007FE 0x000800 0x001FFE 0x002000 0x003FFE 0x004000 0x0057FE

TABLE 21-4: CODE FLASH SECURITY SEGMENT SIZES FOR 16 KBYTE DEVICES

CONFIG BITS		
BSS<2:0>=x11 **0K**	VS = 256 IW GS = 5376 IW	0x000000 0x0001FE 0x000200 0x0007FE 0x000800 0x001FFE 0x002000 0x002BFE
BSS<2:0>=x10 **256**	VS = 256 IW BS = 768 IW GS = 4608 IW	0x000000 0x0001FE 0x000200 0x0007FE 0x000800 0x001FFE 0x002000 0x002BFE
BSS<2:0>=x01 **768**	VS = 256 IW BS = 3840 IW GS = 1536 IW	0x000000 0x0001FE 0x000200 0x0007FE 0x000800 0x001FFE 0x002000 0x002BFE
BSS<2:0>=x00 **1792**	VS = 256 IW BS = 5376 IW	0x000000 0x0001FE 0x000200 0x0007FE 0x000800 0x001FFE 0x002000 0x002BFE

© 2007-2012 Microchip Technology Inc.

22.0 INSTRUCTION SET SUMMARY

Note: This data sheet summarizes the features of the dsPIC33FJ32MC202/204 and dsPIC33FJ16MC304 devices. It is not intended to be a comprehensive reference source. To complement the information in this data sheet, refer to the *"dsPIC33F/PIC24H Family Reference Manual"*. Please see the Microchip web site (www.microchip.com) for the latest dsPIC33F/PIC24H Family Reference Manual sections.

The dsPIC33F instruction set is identical to that of the dsPIC30F.

Most instructions are a single program memory word (24 bits). Only three instructions require two program memory locations.

Each single-word instruction is a 24-bit word, divided into an 8-bit opcode, which specifies the instruction type and one or more operands, which further specify the operation of the instruction.

The instruction set is highly orthogonal and is grouped into five basic categories:

- Word or byte-oriented operations
- Bit-oriented operations
- Literal operations
- DSP operations
- Control operations

Table 22-1 shows the general symbols used in describing the instructions.

The dsPIC33F instruction set summary in Table 22-2 lists all the instructions, along with the status flags affected by each instruction.

Most word or byte-oriented W register instructions (including barrel shift instructions) have three operands:

- The first source operand, which is typically a register 'Wb' without any address modifier
- The second source operand, which is typically a register 'Ws' with or without an address modifier
- The destination of the result, which is typically a register 'Wd' with or without an address modifier

However, word or byte-oriented file register instructions have two operands:

- The file register specified by the value 'f'
- The destination, which could be either the file register 'f' or the W0 register, which is denoted as 'WREG'

Most bit-oriented instructions (including simple rotate/shift instructions) have two operands:

- The W register (with or without an address modifier) or file register (specified by the value of 'Ws' or 'f')
- The bit in the W register or file register (specified by a literal value or indirectly by the contents of register 'Wb')

The literal instructions that involve data movement can use some of the following operands:

- A literal value to be loaded into a W register or file register (specified by 'k')
- The W register or file register where the literal value is to be loaded (specified by 'Wb' or 'f')

However, literal instructions that involve arithmetic or logical operations use some of the following operands:

- The first source operand, which is a register 'Wb' without any address modifier
- The second source operand, which is a literal value
- The destination of the result (only if not the same as the first source operand), which is typically a register 'Wd' with or without an address modifier

The MAC class of DSP instructions can use some of the following operands:

- The accumulator (A or B) to be used (required operand)
- The W registers to be used as the two operands
- The X and Y address space prefetch operations
- The X and Y address space prefetch destinations
- The accumulator write-back destination

The other DSP instructions do not involve any multiplication and can include:

- The accumulator to be used (required)
- The source or destination operand (designated as Wso or Wdo, respectively) with or without an address modifier
- The amount of shift specified by a W register 'Wn' or a literal value

The control instructions can use some of the following operands:

- A program memory address
- The mode of the table read and table write instructions

Most instructions are a single word. Certain double-word instructions are designed to provide all the required information in these 48 bits. In the second word, the 8 MSbs are '0's. If this second word is executed as an instruction (by itself), it will execute as a NOP.

The double-word instructions execute in two instruction cycles.

Most single-word instructions are executed in a single instruction cycle, unless a conditional test is true, or the program counter is changed as a result of the instruction. In these cases, the execution takes two instruction cycles with the additional instruction cycle(s) executed as a NOP. Notable exceptions are the BRA (unconditional/computed branch), indirect CALL/GOTO, all table reads and writes and RETURN/RETFIE instructions, which are single-word instructions but take two or three cycles. Certain instructions that involve skipping over the subsequent instruction require either two or three cycles if the skip is performed, depending on whether the instruction being skipped is a single-word or two-word instruction. Moreover, double-word moves require two cycles.

Note: For more details on the instruction set, refer to the *"16-bit MCU and DSC Programmer's Reference Manual"* (DS70157).

TABLE 22-1: SYMBOLS USED IN OPCODE DESCRIPTIONS

Field	Description
#text	Means literal defined by "text"
(text)	Means "content of text"
[text]	Means "the location addressed by text"
{ }	Optional field or operation
<n:m>	Register bit field
.b	Byte mode selection
.d	Double-Word mode selection
.S	Shadow register select
.w	Word mode selection (default)
Acc	One of two accumulators {A, B}
AWB	Accumulator write back destination address register ∈ {W13, [W13]+ = 2}
bit4	4-bit bit selection field (used in word addressed instructions) ∈ {0...15}
C, DC, N, OV, Z	MCU Status bits: Carry, Digit Carry, Negative, Overflow, Sticky Zero
Expr	Absolute address, label or expression (resolved by the linker)
f	File register address ∈ {0x0000...0x1FFF}
lit1	1-bit unsigned literal ∈ {0,1}
lit4	4-bit unsigned literal ∈ {0...15}
lit5	5-bit unsigned literal ∈ {0...31}
lit8	8-bit unsigned literal ∈ {0...255}
lit10	10-bit unsigned literal ∈ {0...255} for Byte mode, {0:1023} for Word mode
lit14	14-bit unsigned literal ∈ {0...16384}
lit16	16-bit unsigned literal ∈ {0...65535}
lit23	23-bit unsigned literal ∈ {0...8388608}; LSb must be '0'
None	Field does not require an entry, can be blank
OA, OB, SA, SB	DSP Status bits: ACCA Overflow, ACCB Overflow, ACCA Saturate, ACCB Saturate
PC	Program Counter
Slit10	10-bit signed literal ∈ {-512...511}
Slit16	16-bit signed literal ∈ {-32768...32767}
Slit6	6-bit signed literal ∈ {-16...16}
Wb	Base W register ∈ {W0..W15}
Wd	Destination W register ∈ { Wd, [Wd], [Wd++], [Wd--], [++Wd], [--Wd] }
Wdo	Destination W register ∈ { Wnd, [Wnd], [Wnd++], [Wnd--], [++Wnd], [--Wnd], [Wnd+Wb] }
Wm,Wn	Dividend, Divisor working register pair (direct addressing)

© 2007-2012 Microchip Technology Inc.

TABLE 22-1: SYMBOLS USED IN OPCODE DESCRIPTIONS (CONTINUED)

Field	Description
Wm*Wm	Multiplicand and Multiplier working register pair for Square instructions ∈ {W4 * W4,W5 * W5,W6 * W6,W7 * W7}
Wm*Wn	Multiplicand and Multiplier working register pair for DSP instructions ∈ {W4 * W5,W4 * W6,W4 * W7,W5 * W6,W5 * W7,W6 * W7}
Wn	One of 16 working registers ∈ {W0..W15}
Wnd	One of 16 destination working registers ∈ {W0...W15}
Wns	One of 16 source working registers ∈ {W0...W15}
WREG	W0 (working register used in file register instructions)
Ws	Source W register ∈ { Ws, [Ws], [Ws++], [Ws--], [++Ws], [--Ws] }
Wso	Source W register ∈ { Wns, [Wns], [Wns++], [Wns--], [++Wns], [--Wns], [Wns+Wb] }
Wx	X data space prefetch address register for DSP instructions ∈ {[W8] + = 6, [W8] + = 4, [W8] + = 2, [W8], [W8] - = 6, [W8] - = 4, [W8] - = 2, [W9] + = 6, [W9] + = 4, [W9] + = 2, [W9], [W9] - = 6, [W9] - = 4, [W9] - = 2, [W9 + W12], none}
Wxd	X data space prefetch destination register for DSP instructions ∈ {W4...W7}
Wy	Y data space prefetch address register for DSP instructions ∈ {[W10] + = 6, [W10] + = 4, [W10] + = 2, [W10], [W10] - = 6, [W10] - = 4, [W10] - = 2, [W11] + = 6, [W11] + = 4, [W11] + = 2, [W11], [W11] - = 6, [W11] - = 4, [W11] - = 2, [W11 + W12], none}
Wyd	Y data space prefetch destination register for DSP instructions ∈ {W4...W7}

TABLE 22-2: INSTRUCTION SET OVERVIEW

Base Instr #	Assembly Mnemonic	Assembly Syntax		Description	# of Words	# of Cycles	Status Flags Affected
1	ADD	ADD	Acc	Add Accumulators	1	1	OA,OB,SA,SB
		ADD	f	f = f + WREG	1	1	C,DC,N,OV,Z
		ADD	f,WREG	WREG = f + WREG	1	1	C,DC,N,OV,Z
		ADD	#lit10,Wn	Wd = lit10 + Wd	1	1	C,DC,N,OV,Z
		ADD	Wb,Ws,Wd	Wd = Wb + Ws	1	1	C,DC,N,OV,Z
		ADD	Wb,#lit5,Wd	Wd = Wb + lit5	1	1	C,DC,N,OV,Z
		ADD	Wso,#Slit4,Acc	16-bit Signed Add to Accumulator	1	1	OA,OB,SA,SB
2	ADDC	ADDC	f	f = f + WREG + (C)	1	1	C,DC,N,OV,Z
		ADDC	f,WREG	WREG = f + WREG + (C)	1	1	C,DC,N,OV,Z
		ADDC	#lit10,Wn	Wd = lit10 + Wd + (C)	1	1	C,DC,N,OV,Z
		ADDC	Wb,Ws,Wd	Wd = Wb + Ws + (C)	1	1	C,DC,N,OV,Z
		ADDC	Wb,#lit5,Wd	Wd = Wb + lit5 + (C)	1	1	C,DC,N,OV,Z
3	AND	AND	f	f = f .AND. WREG	1	1	N,Z
		AND	f,WREG	WREG = f .AND. WREG	1	1	N,Z
		AND	#lit10,Wn	Wd = lit10 .AND. Wd	1	1	N,Z
		AND	Wb,Ws,Wd	Wd = Wb .AND. Ws	1	1	N,Z
		AND	Wb,#lit5,Wd	Wd = Wb .AND. lit5	1	1	N,Z
4	ASR	ASR	f	f = Arithmetic Right Shift f	1	1	C,N,OV,Z
		ASR	f,WREG	WREG = Arithmetic Right Shift f	1	1	C,N,OV,Z
		ASR	Ws,Wd	Wd = Arithmetic Right Shift Ws	1	1	C,N,OV,Z
		ASR	Wb,Wns,Wnd	Wnd = Arithmetic Right Shift Wb by Wns	1	1	N,Z
		ASR	Wb,#lit5,Wnd	Wnd = Arithmetic Right Shift Wb by lit5	1	1	N,Z
5	BCLR	BCLR	f,#bit4	Bit Clear f	1	1	None
		BCLR	Ws,#bit4	Bit Clear Ws	1	1	None
6	BRA	BRA	C,Expr	Branch if Carry	1	1 (2)	None
		BRA	GE,Expr	Branch if greater than or equal	1	1 (2)	None
		BRA	GEU,Expr	Branch if unsigned greater than or equal	1	1 (2)	None
		BRA	GT,Expr	Branch if greater than	1	1 (2)	None
		BRA	GTU,Expr	Branch if unsigned greater than	1	1 (2)	None
		BRA	LE,Expr	Branch if less than or equal	1	1 (2)	None
		BRA	LEU,Expr	Branch if unsigned less than or equal	1	1 (2)	None
		BRA	LT,Expr	Branch if less than	1	1 (2)	None
		BRA	LTU,Expr	Branch if unsigned less than	1	1 (2)	None
		BRA	N,Expr	Branch if Negative	1	1 (2)	None
		BRA	NC,Expr	Branch if Not Carry	1	1 (2)	None
		BRA	NN,Expr	Branch if Not Negative	1	1 (2)	None
		BRA	NOV,Expr	Branch if Not Overflow	1	1 (2)	None
		BRA	NZ,Expr	Branch if Not Zero	1	1 (2)	None
		BRA	OA,Expr	Branch if Accumulator A overflow	1	1 (2)	None
		BRA	OB,Expr	Branch if Accumulator B overflow	1	1 (2)	None
		BRA	OV,Expr	Branch if Overflow	1	1 (2)	None
		BRA	SA,Expr	Branch if Accumulator A saturated	1	1 (2)	None
		BRA	SB,Expr	Branch if Accumulator B saturated	1	1 (2)	None
		BRA	Expr	Branch Unconditionally	1	2	None
		BRA	Z,Expr	Branch if Zero	1	1 (2)	None
		BRA	Wn	Computed Branch	1	2	None
7	BSET	BSET	f,#bit4	Bit Set f	1	1	None
		BSET	Ws,#bit4	Bit Set Ws	1	1	None
8	BSW	BSW.C	Ws,Wb	Write C bit to Ws<Wb>	1	1	None
		BSW.Z	Ws,Wb	Write Z bit to Ws<Wb>	1	1	None

© 2007-2012 Microchip Technology Inc.

TABLE 22-2: INSTRUCTION SET OVERVIEW (CONTINUED)

Base Instr #	Assembly Mnemonic	Assembly Syntax	Description	# of Words	# of Cycles	Status Flags Affected
9	BTG	BTG f,#bit4	Bit Toggle f	1	1	None
		BTG Ws,#bit4	Bit Toggle Ws	1	1	None
10	BTSC	BTSC f,#bit4	Bit Test f, Skip if Clear	1	1 (2 or 3)	None
		BTSC Ws,#bit4	Bit Test Ws, Skip if Clear	1	1 (2 or 3)	None
11	BTSS	BTSS f,#bit4	Bit Test f, Skip if Set	1	1 (2 or 3)	None
		BTSS Ws,#bit4	Bit Test Ws, Skip if Set	1	1 (2 or 3)	None
12	BTST	BTST f,#bit4	Bit Test f	1	1	Z
		BTST.C Ws,#bit4	Bit Test Ws to C	1	1	C
		BTST.Z Ws,#bit4	Bit Test Ws to Z	1	1	Z
		BTST.C Ws,Wb	Bit Test Ws<Wb> to C	1	1	C
		BTST.Z Ws,Wb	Bit Test Ws<Wb> to Z	1	1	Z
13	BTSTS	BTSTS f,#bit4	Bit Test then Set f	1	1	Z
		BTSTS.C Ws,#bit4	Bit Test Ws to C, then Set	1	1	C
		BTSTS.Z Ws,#bit4	Bit Test Ws to Z, then Set	1	1	Z
14	CALL	CALL lit23	Call subroutine	2	2	None
		CALL Wn	Call indirect subroutine	1	2	None
15	CLR	CLR f	f = 0x0000	1	1	None
		CLR WREG	WREG = 0x0000	1	1	None
		CLR Ws	Ws = 0x0000	1	1	None
		CLR Acc,Wx,Wxd,Wy,Wyd,AWB	Clear Accumulator	1	1	OA,OB,SA,SB
16	CLRWDT	CLRWDT	Clear Watchdog Timer	1	1	WDTO,Sleep
17	COM	COM f	$f = \overline{f}$	1	1	N,Z
		COM f,WREG	$WREG = \overline{f}$	1	1	N,Z
		COM Ws,Wd	$Wd = \overline{Ws}$	1	1	N,Z
18	CP	CP f	Compare f with WREG	1	1	C,DC,N,OV,Z
		CP Wb,#lit5	Compare Wb with lit5	1	1	C,DC,N,OV,Z
		CP Wb,Ws	Compare Wb with Ws (Wb – Ws)	1	1	C,DC,N,OV,Z
19	CP0	CP0 f	Compare f with 0x0000	1	1	C,DC,N,OV,Z
		CP0 Ws	Compare Ws with 0x0000	1	1	C,DC,N,OV,Z
20	CPB	CPB f	Compare f with WREG, with Borrow	1	1	C,DC,N,OV,Z
		CPB Wb,#lit5	Compare Wb with lit5, with Borrow	1	1	C,DC,N,OV,Z
		CPB Wb,Ws	Compare Wb with Ws, with Borrow ($Wb - Ws - \overline{C}$)	1	1	C,DC,N,OV,Z
21	CPSEQ	CPSEQ Wb, Wn	Compare Wb with Wn, skip if =	1	1 (2 or 3)	None
22	CPSGT	CPSGT Wb, Wn	Compare Wb with Wn, skip if >	1	1 (2 or 3)	None
23	CPSLT	CPSLT Wb, Wn	Compare Wb with Wn, skip if <	1	1 (2 or 3)	None
24	CPSNE	CPSNE Wb, Wn	Compare Wb with Wn, skip if ≠	1	1 (2 or 3)	None
25	DAW	DAW Wn	Wn = decimal adjust Wn	1	1	C
26	DEC	DEC f	f = f - 1	1	1	C,DC,N,OV,Z
		DEC f,WREG	WREG = f - 1	1	1	C,DC,N,OV,Z
		DEC Ws,Wd	Wd = Ws - 1	1	1	C,DC,N,OV,Z
27	DEC2	DEC2 f	f = f - 2	1	1	C,DC,N,OV,Z
		DEC2 f,WREG	WREG = f - 2	1	1	C,DC,N,OV,Z
		DEC2 Ws,Wd	Wd = Ws - 2	1	1	C,DC,N,OV,Z
28	DISI	DISI #lit14	Disable Interrupts for k instruction cycles	1	1	None

TABLE 22-2: INSTRUCTION SET OVERVIEW (CONTINUED)

Base Instr #	Assembly Mnemonic	Assembly Syntax	Description	# of Words	# of Cycles	Status Flags Affected
29	DIV	DIV.S Wm,Wn	Signed 16/16-bit Integer Divide	1	18	N,Z,C,OV
		DIV.SD Wm,Wn	Signed 32/16-bit Integer Divide	1	18	N,Z,C,OV
		DIV.U Wm,Wn	Unsigned 16/16-bit Integer Divide	1	18	N,Z,C,OV
		DIV.UD Wm,Wn	Unsigned 32/16-bit Integer Divide	1	18	N,Z,C,OV
30	DIVF	DIVF Wm,Wn	Signed 16/16-bit Fractional Divide	1	18	N,Z,C,OV
31	DO	DO #lit14,Expr	Do code to PC + Expr, lit14 + 1 times	2	2	None
		DO Wn,Expr	Do code to PC + Expr, (Wn) + 1 times	2	2	None
32	ED	ED Wm*Wm,Acc,Wx,Wy,Wxd	Euclidean Distance (no accumulate)	1	1	OA,OB,OAB, SA,SB,SAB
33	EDAC	EDAC Wm*Wm,Acc,Wx,Wy,Wxd	Euclidean Distance	1	1	OA,OB,OAB, SA,SB,SAB
34	EXCH	EXCH Wns,Wnd	Swap Wns with Wnd	1	1	None
35	FBCL	FBCL Ws,Wnd	Find Bit Change from Left (MSb) Side	1	1	C
36	FF1L	FF1L Ws,Wnd	Find First One from Left (MSb) Side	1	1	C
37	FF1R	FF1R Ws,Wnd	Find First One from Right (LSb) Side	1	1	C
38	GOTO	GOTO Expr	Go to address	2	2	None
		GOTO Wn	Go to indirect	1	2	None
39	INC	INC f	f = f + 1	1	1	C,DC,N,OV,Z
		INC f,WREG	WREG = f + 1	1	1	C,DC,N,OV,Z
		INC Ws,Wd	Wd = Ws + 1	1	1	C,DC,N,OV,Z
40	INC2	INC2 f	f = f + 2	1	1	C,DC,N,OV,Z
		INC2 f,WREG	WREG = f + 2	1	1	C,DC,N,OV,Z
		INC2 Ws,Wd	Wd = Ws + 2	1	1	C,DC,N,OV,Z
41	IOR	IOR f	f = f .IOR. WREG	1	1	N,Z
		IOR f,WREG	WREG = f .IOR. WREG	1	1	N,Z
		IOR #lit10,Wn	Wd = lit10 .IOR. Wd	1	1	N,Z
		IOR Wb,Ws,Wd	Wd = Wb .IOR. Ws	1	1	N,Z
		IOR Wb,#lit5,Wd	Wd = Wb .IOR. lit5	1	1	N,Z
42	LAC	LAC Wso,#Slit4,Acc	Load Accumulator	1	1	OA,OB,OAB, SA,SB,SAB
43	LNK	LNK #lit14	Link Frame Pointer	1	1	None
44	LSR	LSR f	f = Logical Right Shift f	1	1	C,N,OV,Z
		LSR f,WREG	WREG = Logical Right Shift f	1	1	C,N,OV,Z
		LSR Ws,Wd	Wd = Logical Right Shift Ws	1	1	C,N,OV,Z
		LSR Wb,Wns,Wnd	Wnd = Logical Right Shift Wb by Wns	1	1	N,Z
		LSR Wb,#lit5,Wnd	Wnd = Logical Right Shift Wb by lit5	1	1	N,Z
45	MAC	MAC Wm*Wn,Acc,Wx,Wxd,Wy,Wyd, AWB	Multiply and Accumulate	1	1	OA,OB,OAB, SA,SB,SAB
		MAC Wm*Wm,Acc,Wx,Wxd,Wy,Wyd	Square and Accumulate	1	1	OA,OB,OAB, SA,SB,SAB
46	MOV	MOV f,Wn	Move f to Wn	1	1	None
		MOV f	Move f to f	1	1	N,Z
		MOV f,WREG	Move f to WREG	1	1	None
		MOV #lit16,Wn	Move 16-bit literal to Wn	1	1	None
		MOV.b #lit8,Wn	Move 8-bit literal to Wn	1	1	None
		MOV Wn,f	Move Wn to f	1	1	None
		MOV Wso,Wdo	Move Ws to Wd	1	1	None
		MOV WREG,f	Move WREG to f	1	1	None
		MOV.D Wns,Wd	Move Double from W(ns):W(ns + 1) to Wd	1	2	None
		MOV.D Ws,Wnd	Move Double from Ws to W(nd + 1):W(nd)	1	2	None
47	MOVSAC	MOVSAC Acc,Wx,Wxd,Wy,Wyd,AWB	Prefetch and store accumulator	1	1	None

© 2007-2012 Microchip Technology Inc.

TABLE 22-2: INSTRUCTION SET OVERVIEW (CONTINUED)

Base Instr #	Assembly Mnemonic	Assembly Syntax	Description	# of Words	# of Cycles	Status Flags Affected
48	MPY	MPY Wm*Wn,Acc,Wx,Wxd,Wy,Wyd	Multiply Wm by Wn to Accumulator	1	1	OA,OB,OAB, SA,SB,SAB
		MPY Wm*Wm,Acc,Wx,Wxd,Wy,Wyd	Square Wm to Accumulator	1	1	OA,OB,OAB, SA,SB,SAB
49	MPY.N	MPY.N Wm*Wn,Acc,Wx,Wxd,Wy,Wyd	-(Multiply Wm by Wn) to Accumulator	1	1	None
50	MSC	MSC Wm*Wm,Acc,Wx,Wxd,Wy,Wyd, AWB	Multiply and Subtract from Accumulator	1	1	OA,OB,OAB, SA,SB,SAB
51	MUL	MUL.SS Wb,Ws,Wnd	{Wnd + 1, Wnd} = signed(Wb) * signed(Ws)	1	1	None
		MUL.SU Wb,Ws,Wnd	{Wnd + 1, Wnd} = signed(Wb) * unsigned(Ws)	1	1	None
		MUL.US Wb,Ws,Wnd	{Wnd + 1, Wnd} = unsigned(Wb) * signed(Ws)	1	1	None
		MUL.UU Wb,Ws,Wnd	{Wnd + 1, Wnd} = unsigned(Wb) * unsigned(Ws)	1	1	None
		MUL.SU Wb,#lit5,Wnd	{Wnd + 1, Wnd} = signed(Wb) * unsigned(lit5)	1	1	None
		MUL.UU Wb,#lit5,Wnd	{Wnd + 1, Wnd} = unsigned(Wb) * unsigned(lit5)	1	1	None
		MUL f	W3:W2 = f * WREG	1	1	None
52	NEG	NEG Acc	Negate Accumulator	1	1	OA,OB,OAB, SA,SB,SAB
		NEG f	f = $\bar{f}$ + 1	1	1	C,DC,N,OV,Z
		NEG f,WREG	WREG = $\bar{f}$ + 1	1	1	C,DC,N,OV,Z
		NEG Ws,Wd	Wd = $\overline{Ws}$ + 1	1	1	C,DC,N,OV,Z
53	NOP	NOP	No Operation	1	1	None
		NOPR	No Operation	1	1	None
54	POP	POP f	Pop f from Top-of-Stack (TOS)	1	1	None
		POP Wdo	Pop from Top-of-Stack (TOS) to Wdo	1	1	None
		POP.D Wnd	Pop from Top-of-Stack (TOS) to W(nd):W(nd + 1)	1	2	None
		POP.S	Pop Shadow Registers	1	1	All
55	PUSH	PUSH f	Push f to Top-of-Stack (TOS)	1	1	None
		PUSH Wso	Push Wso to Top-of-Stack (TOS)	1	1	None
		PUSH.D Wns	Push W(ns):W(ns + 1) to Top-of-Stack (TOS)	1	2	None
		PUSH.S	Push Shadow Registers	1	1	None
56	PWRSAV	PWRSAV #lit1	Go into Sleep or Idle mode	1	1	WDTO,Sleep
57	RCALL	RCALL Expr	Relative Call	1	2	None
		RCALL Wn	Computed Call	1	2	None
58	REPEAT	REPEAT #lit14	Repeat Next Instruction lit14 + 1 times	1	1	None
		REPEAT Wn	Repeat Next Instruction (Wn) + 1 times	1	1	None
59	RESET	RESET	Software device Reset	1	1	None
60	RETFIE	RETFIE	Return from interrupt	1	3 (2)	None
61	RETLW	RETLW #lit10,Wn	Return with literal in Wn	1	3 (2)	None
62	RETURN	RETURN	Return from Subroutine	1	3 (2)	None
63	RLC	RLC f	f = Rotate Left through Carry f	1	1	C,N,Z
		RLC f,WREG	WREG = Rotate Left through Carry f	1	1	C,N,Z
		RLC Ws,Wd	Wd = Rotate Left through Carry Ws	1	1	C,N,Z
64	RLNC	RLNC f	f = Rotate Left (No Carry) f	1	1	N,Z
		RLNC f,WREG	WREG = Rotate Left (No Carry) f	1	1	N,Z
		RLNC Ws,Wd	Wd = Rotate Left (No Carry) Ws	1	1	N,Z
65	RRC	RRC f	f = Rotate Right through Carry f	1	1	C,N,Z
		RRC f,WREG	WREG = Rotate Right through Carry f	1	1	C,N,Z
		RRC Ws,Wd	Wd = Rotate Right through Carry Ws	1	1	C,N,Z

TABLE 22-2: INSTRUCTION SET OVERVIEW (CONTINUED)

Base Instr #	Assembly Mnemonic	Assembly Syntax		Description	# of Words	# of Cycles	Status Flags Affected
66	RRNC	RRNC	f	f = Rotate Right (No Carry) f	1	1	N,Z
		RRNC	f,WREG	WREG = Rotate Right (No Carry) f	1	1	N,Z
		RRNC	Ws,Wd	Wd = Rotate Right (No Carry) Ws	1	1	N,Z
67	SAC	SAC	Acc,#Slit4,Wdo	Store Accumulator	1	1	None
		SAC.R	Acc,#Slit4,Wdo	Store Rounded Accumulator	1	1	None
68	SE	SE	Ws,Wnd	Wnd = sign-extended Ws	1	1	C,N,Z
69	SETM	SETM	f	f = 0xFFFF	1	1	None
		SETM	WREG	WREG = 0xFFFF	1	1	None
		SETM	Ws	Ws = 0xFFFF	1	1	None
70	SFTAC	SFTAC	Acc,Wn	Arithmetic Shift Accumulator by (Wn)	1	1	OA,OB,OAB, SA,SB,SAB
		SFTAC	Acc,#Slit6	Arithmetic Shift Accumulator by Slit6	1	1	OA,OB,OAB, SA,SB,SAB
71	SL	SL	f	f = Left Shift f	1	1	C,N,OV,Z
		SL	f,WREG	WREG = Left Shift f	1	1	C,N,OV,Z
		SL	Ws,Wd	Wd = Left Shift Ws	1	1	C,N,OV,Z
		SL	Wb,Wns,Wnd	Wnd = Left Shift Wb by Wns	1	1	N,Z
		SL	Wb,#lit5,Wnd	Wnd = Left Shift Wb by lit5	1	1	N,Z
72	SUB	SUB	Acc	Subtract Accumulators	1	1	OA,OB,OAB, SA,SB,SAB
		SUB	f	f = f - WREG	1	1	C,DC,N,OV,Z
		SUB	f,WREG	WREG = f - WREG	1	1	C,DC,N,OV,Z
		SUB	#lit10,Wn	Wn = Wn - lit10	1	1	C,DC,N,OV,Z
		SUB	Wb,Ws,Wd	Wd = Wb - Ws	1	1	C,DC,N,OV,Z
		SUB	Wb,#lit5,Wd	Wd = Wb - lit5	1	1	C,DC,N,OV,Z
73	SUBB	SUBB	f	f = f - WREG - ($\overline{C}$)	1	1	C,DC,N,OV,Z
		SUBB	f,WREG	WREG = f - WREG - ($\overline{C}$)	1	1	C,DC,N,OV,Z
		SUBB	#lit10,Wn	Wn = Wn - lit10 - ($\overline{C}$)	1	1	C,DC,N,OV,Z
		SUBB	Wb,Ws,Wd	Wd = Wb - Ws - ($\overline{C}$)	1	1	C,DC,N,OV,Z
		SUBB	Wb,#lit5,Wd	Wd = Wb - lit5 - ($\overline{C}$)	1	1	C,DC,N,OV,Z
74	SUBR	SUBR	f	f = WREG - f	1	1	C,DC,N,OV,Z
		SUBR	f,WREG	WREG = WREG - f	1	1	C,DC,N,OV,Z
		SUBR	Wb,Ws,Wd	Wd = Ws - Wb	1	1	C,DC,N,OV,Z
		SUBR	Wb,#lit5,Wd	Wd = lit5 - Wb	1	1	C,DC,N,OV,Z
75	SUBBR	SUBBR	f	f = WREG - f - ($\overline{C}$)	1	1	C,DC,N,OV,Z
		SUBBR	f,WREG	WREG = WREG - f - ($\overline{C}$)	1	1	C,DC,N,OV,Z
		SUBBR	Wb,Ws,Wd	Wd = Ws - Wb - ($\overline{C}$)	1	1	C,DC,N,OV,Z
		SUBBR	Wb,#lit5,Wd	Wd = lit5 - Wb - ($\overline{C}$)	1	1	C,DC,N,OV,Z
76	SWAP	SWAP.b	Wn	Wn = nibble swap Wn	1	1	None
		SWAP	Wn	Wn = byte swap Wn	1	1	None
77	TBLRDH	TBLRDH	Ws,Wd	Read Prog<23:16> to Wd<7:0>	1	2	None
78	TBLRDL	TBLRDL	Ws,Wd	Read Prog<15:0> to Wd	1	2	None
79	TBLWTH	TBLWTH	Ws,Wd	Write Ws<7:0> to Prog<23:16>	1	2	None
80	TBLWTL	TBLWTL	Ws,Wd	Write Ws to Prog<15:0>	1	2	None
81	ULNK	ULNK		Unlink Frame Pointer	1	1	None
82	XOR	XOR	f	f = f .XOR. WREG	1	1	N,Z
		XOR	f,WREG	WREG = f .XOR. WREG	1	1	N,Z
		XOR	#lit10,Wn	Wd = lit10 .XOR. Wd	1	1	N,Z
		XOR	Wb,Ws,Wd	Wd = Wb .XOR. Ws	1	1	N,Z
		XOR	Wb,#lit5,Wd	Wd = Wb .XOR. lit5	1	1	N,Z
83	ZE	ZE	Ws,Wnd	Wnd = Zero-extend Ws	1	1	C,Z,N

© 2007-2012 Microchip Technology Inc.

23.0 DEVELOPMENT SUPPORT

The PIC® microcontrollers and dsPIC® digital signal controllers are supported with a full range of software and hardware development tools:

- Integrated Development Environment
  - MPLAB® IDE Software
- Compilers/Assemblers/Linkers
  - MPLAB C Compiler for Various Device Families
  - HI-TECH C® for Various Device Families
  - MPASM™ Assembler
  - MPLINK™ Object Linker/ MPLIB™ Object Librarian
  - MPLAB Assembler/Linker/Librarian for Various Device Families
- Simulators
  - MPLAB SIM Software Simulator
- Emulators
  - MPLAB REAL ICE™ In-Circuit Emulator
- In-Circuit Debuggers
  - MPLAB ICD 3
  - PICkit™ 3 Debug Express
- Device Programmers
  - PICkit™ 2 Programmer
  - MPLAB PM3 Device Programmer
- Low-Cost Demonstration/Development Boards, Evaluation Kits, and Starter Kits

23.1 MPLAB Integrated Development Environment Software

The MPLAB IDE software brings an ease of software development previously unseen in the 8/16/32-bit microcontroller market. The MPLAB IDE is a Windows® operating system-based application that contains:

- A single graphical interface to all debugging tools
  - Simulator
  - Programmer (sold separately)
  - In-Circuit Emulator (sold separately)
  - In-Circuit Debugger (sold separately)
- A full-featured editor with color-coded context
- A multiple project manager
- Customizable data windows with direct edit of contents
- High-level source code debugging
- Mouse over variable inspection
- Drag and drop variables from source to watch windows
- Extensive on-line help
- Integration of select third party tools, such as IAR C Compilers

The MPLAB IDE allows you to:

- Edit your source files (either C or assembly)
- One-touch compile or assemble, and download to emulator and simulator tools (automatically updates all project information)
- Debug using:
  - Source files (C or assembly)
  - Mixed C and assembly
  - Machine code

MPLAB IDE supports multiple debugging tools in a single development paradigm, from the cost-effective simulators, through low-cost in-circuit debuggers, to full-featured emulators. This eliminates the learning curve when upgrading to tools with increased flexibility and power.

23.2 MPLAB C Compilers for Various Device Families

The MPLAB C Compiler code development systems are complete ANSI C compilers for Microchip's PIC18, PIC24 and PIC32 families of microcontrollers and the dsPIC30 and dsPIC33 families of digital signal controllers. These compilers provide powerful integration capabilities, superior code optimization and ease of use.

For easy source level debugging, the compilers provide symbol information that is optimized to the MPLAB IDE debugger.

23.3 HI-TECH C for Various Device Families

The HI-TECH C Compiler code development systems are complete ANSI C compilers for Microchip's PIC family of microcontrollers and the dsPIC family of digital signal controllers. These compilers provide powerful integration capabilities, omniscient code generation and ease of use.

For easy source level debugging, the compilers provide symbol information that is optimized to the MPLAB IDE debugger.

The compilers include a macro assembler, linker, preprocessor, and one-step driver, and can run on multiple platforms.

23.4 MPASM Assembler

The MPASM Assembler is a full-featured, universal macro assembler for PIC10/12/16/18 MCUs.

The MPASM Assembler generates relocatable object files for the MPLINK Object Linker, Intel® standard HEX files, MAP files to detail memory usage and symbol reference, absolute LST files that contain source lines and generated machine code and COFF files for debugging.

The MPASM Assembler features include:

- Integration into MPLAB IDE projects
- User-defined macros to streamline assembly code
- Conditional assembly for multi-purpose source files
- Directives that allow complete control over the assembly process

23.5 MPLINK Object Linker/ MPLIB Object Librarian

The MPLINK Object Linker combines relocatable objects created by the MPASM Assembler and the MPLAB C18 C Compiler. It can link relocatable objects from precompiled libraries, using directives from a linker script.

The MPLIB Object Librarian manages the creation and modification of library files of precompiled code. When a routine from a library is called from a source file, only the modules that contain that routine will be linked in with the application. This allows large libraries to be used efficiently in many different applications.

The object linker/library features include:

- Efficient linking of single libraries instead of many smaller files
- Enhanced code maintainability by grouping related modules together
- Flexible creation of libraries with easy module listing, replacement, deletion and extraction

23.6 MPLAB Assembler, Linker and Librarian for Various Device Families

MPLAB Assembler produces relocatable machine code from symbolic assembly language for PIC24, PIC32 and dsPIC devices. MPLAB C Compiler uses the assembler to produce its object file. The assembler generates relocatable object files that can then be archived or linked with other relocatable object files and archives to create an executable file. Notable features of the assembler include:

- Support for the entire device instruction set
- Support for fixed-point and floating-point data
- Command line interface
- Rich directive set
- Flexible macro language
- MPLAB IDE compatibility

© 2007-2012 Microchip Technology Inc.

23.7 MPLAB SIM Software Simulator

The MPLAB SIM Software Simulator allows code development in a PC-hosted environment by simulating the PIC MCUs and dsPIC® DSCs on an instruction level. On any given instruction, the data areas can be examined or modified and stimuli can be applied from a comprehensive stimulus controller. Registers can be logged to files for further run-time analysis. The trace buffer and logic analyzer display extend the power of the simulator to record and track program execution, actions on I/O, most peripherals and internal registers.

The MPLAB SIM Software Simulator fully supports symbolic debugging using the MPLAB C Compilers, and the MPASM and MPLAB Assemblers. The software simulator offers the flexibility to develop and debug code outside of the hardware laboratory environment, making it an excellent, economical software development tool.

23.8 MPLAB REAL ICE In-Circuit Emulator System

MPLAB REAL ICE In-Circuit Emulator System is Microchip's next generation high-speed emulator for Microchip Flash DSC and MCU devices. It debugs and programs PIC® Flash MCUs and dsPIC® Flash DSCs with the easy-to-use, powerful graphical user interface of the MPLAB Integrated Development Environment (IDE), included with each kit.

The emulator is connected to the design engineer's PC using a high-speed USB 2.0 interface and is connected to the target with either a connector compatible with in-circuit debugger systems (RJ11) or with the new high-speed, noise tolerant, Low-Voltage Differential Signal (LVDS) interconnection (CAT5).

The emulator is field upgradable through future firmware downloads in MPLAB IDE. In upcoming releases of MPLAB IDE, new devices will be supported, and new features will be added. MPLAB REAL ICE offers significant advantages over competitive emulators including low-cost, full-speed emulation, run-time variable watches, trace analysis, complex breakpoints, a ruggedized probe interface and long (up to three meters) interconnection cables.

23.9 MPLAB ICD 3 In-Circuit Debugger System

MPLAB ICD 3 In-Circuit Debugger System is Microchip's most cost effective high-speed hardware debugger/programmer for Microchip Flash Digital Signal Controller (DSC) and microcontroller (MCU) devices. It debugs and programs PIC® Flash microcontrollers and dsPIC® DSCs with the powerful, yet easy-to-use graphical user interface of MPLAB Integrated Development Environment (IDE).

The MPLAB ICD 3 In-Circuit Debugger probe is connected to the design engineer's PC using a high-speed USB 2.0 interface and is connected to the target with a connector compatible with the MPLAB ICD 2 or MPLAB REAL ICE systems (RJ-11). MPLAB ICD 3 supports all MPLAB ICD 2 headers.

23.10 PICkit 3 In-Circuit Debugger/ Programmer and PICkit 3 Debug Express

The MPLAB PICkit 3 allows debugging and programming of PIC® and dsPIC® Flash microcontrollers at a most affordable price point using the powerful graphical user interface of the MPLAB Integrated Development Environment (IDE). The MPLAB PICkit 3 is connected to the design engineer's PC using a full speed USB interface and can be connected to the target via an Microchip debug (RJ-11) connector (compatible with MPLAB ICD 3 and MPLAB REAL ICE). The connector uses two device I/O pins and the reset line to implement in-circuit debugging and In-Circuit Serial Programming™.

The PICkit 3 Debug Express include the PICkit 3, demo board and microcontroller, hookup cables and CDROM with user's guide, lessons, tutorial, compiler and MPLAB IDE software.

23.11 PICkit 2 Development Programmer/Debugger and PICkit 2 Debug Express

The PICkit™ 2 Development Programmer/Debugger is a low-cost development tool with an easy to use interface for programming and debugging Microchip's Flash families of microcontrollers. The full featured Windows® programming interface supports baseline (PIC10F, PIC12F5xx, PIC16F5xx), midrange (PIC12F6xx, PIC16F), PIC18F, PIC24, dsPIC30, dsPIC33, and PIC32 families of 8-bit, 16-bit, and 32-bit microcontrollers, and many Microchip Serial EEPROM products. With Microchip's powerful MPLAB Integrated Development Environment (IDE) the PICkit™ 2 enables in-circuit debugging on most PIC® microcontrollers. In-Circuit-Debugging runs, halts and single steps the program while the PIC microcontroller is embedded in the application. When halted at a breakpoint, the file registers can be examined and modified.

The PICkit 2 Debug Express include the PICkit 2, demo board and microcontroller, hookup cables and CDROM with user's guide, lessons, tutorial, compiler and MPLAB IDE software.

23.12 MPLAB PM3 Device Programmer

The MPLAB PM3 Device Programmer is a universal, CE compliant device programmer with programmable voltage verification at VDDMIN and VDDMAX for maximum reliability. It features a large LCD display (128 x 64) for menus and error messages and a modular, detachable socket assembly to support various package types. The ICSP™ cable assembly is included as a standard item. In Stand-Alone mode, the MPLAB PM3 Device Programmer can read, verify and program PIC devices without a PC connection. It can also set code protection in this mode. The MPLAB PM3 connects to the host PC via an RS-232 or USB cable. The MPLAB PM3 has high-speed communications and optimized algorithms for quick programming of large memory devices and incorporates an MMC card for file storage and data applications.

23.13 Demonstration/Development Boards, Evaluation Kits, and Starter Kits

A wide variety of demonstration, development and evaluation boards for various PIC MCUs and dsPIC DSCs allows quick application development on fully functional systems. Most boards include prototyping areas for adding custom circuitry and provide application firmware and source code for examination and modification.

The boards support a variety of features, including LEDs, temperature sensors, switches, speakers, RS-232 interfaces, LCD displays, potentiometers and additional EEPROM memory.

The demonstration and development boards can be used in teaching environments, for prototyping custom circuits and for learning about various microcontroller applications.

In addition to the PICDEM™ and dsPICDEM™ demonstration/development board series of circuits, Microchip has a line of evaluation kits and demonstration software for analog filter design, KEELOQ® security ICs, CAN, IrDA®, PowerSmart battery management, SEEVAL® evaluation system, Sigma-Delta ADC, flow rate sensing, plus many more.

Also available are starter kits that contain everything needed to experience the specified device. This usually includes a single application and debug capability, all on one board.

Check the Microchip web page (www.microchip.com) for the complete list of demonstration, development and evaluation kits.

© 2007-2012 Microchip Technology Inc.

24.0 ELECTRICAL CHARACTERISTICS

This section provides an overview of dsPIC33FJ32MC202/204 and dsPIC33FJ16MC304 electrical characteristics. Additional information will be provided in future revisions of this document as it becomes available.

Absolute maximum ratings for the dsPIC33FJ32MC202/204 and dsPIC33FJ16MC304 family are listed below. Exposure to these maximum rating conditions for extended periods may affect device reliability. Functional operation of the device at these or any other conditions above the parameters indicated in the operation listings of this specification is not implied.

Absolute Maximum Ratings(1)

Ambient temperature under bias ..... -40°C to +125°C
Storage temperature ..... -65°C to +160°C
Voltage on V_{DD} with respect to V_{SS} ..... -0.3V to +4.0V
Voltage on any pin that is not 5V tolerant with respect to V_{SS}(4) ..... -0.3V to (V_{DD} + 0.3V)
Voltage on any 5V tolerant pin with respect to Vss when $V_{DD} \geq 3.0V$(4) ..... -0.3V to +5.6V
Voltage on any 5V tolerant pin with respect to V_{SS} when $V_{DD} < 3.0V$(4) ..... -0.3V to 3.6V
Maximum current out of V_{SS} pin ..... 300 mA
Maximum current into V_{DD} pin(2) ..... 250 mA
Maximum current sourced/sunk by any 2x I/O pin(3) ..... 8 mA
Maximum current sourced/sunk by any 4x I/O pin(3) ..... 15 mA
Maximum current sourced/sunk by any 8x I/O pin(3) ..... 25 mA
Maximum current sunk by all ports ..... 200 mA
Maximum current sourced by all ports(2) ..... 200 mA

Note 1: Stresses above those listed under "Absolute Maximum Ratings" may cause permanent damage to the device. This is a stress rating only, and functional operation of the device at those or any other conditions above those indicated in the operation listings of this specification is not implied. Exposure to maximum rating conditions for extended periods may affect device reliability.

2: Maximum allowable current is a function of device maximum power dissipation (see Table 24-2).

3: Exceptions are CLKOUT, which is able to sink/source 25 mA, and the V_{REF}+, V_{REF}-, SCLx, SDAx, PGECx and PGEDx pins, which are able to sink/source 12 mA.

4: Refer to the **"Pin Diagrams"** section for 5V tolerant pins.

24.1 DC Characteristics

TABLE 24-1: OPERATING MIPS VS. VOLTAGE

Characteristic	VDD Range (in Volts)	Temp Range (in °C)	Max MIPS
			dsPIC33FJ32MC202/204 and dsPIC33FJ16MC304
—	VBOR-3.6V(1)	-40°C to +85°C	40
—	VBOR-3.6V(1)	-40°C to +125°C	40

Note 1: Device is functional at VBORMIN < VDD < VDDMIN. Analog modules such as the ADC will have degraded performance. Device functionality is tested but not characterized. Refer to parameter BO10 in Table 24-11 for the minimum and maximum BOR values.

TABLE 24-2: THERMAL OPERATING CONDITIONS

Rating	Symbol	Min	Typ	Max	Unit
Industrial Temperature Devices					
Operating Junction Temperature Range	TJ	-40	—	+125	°C
Operating Ambient Temperature Range	TA	-40	—	+85	°C
Extended Temperature Devices					
Operating Junction Temperature Range	TJ	-40	—	+140	°C
Operating Ambient Temperature Range	TA	-40	—	+125	°C
Power Dissipation: Internal chip power dissipation: PINT = VDD x (IDD - Σ IOH) I/O Pin Power Dissipation: I/O = Σ ({VDD - VOH} x IOH) + Σ (VOL x IOL)	PD	PINT + PI/O			W
Maximum Allowed Power Dissipation	PDMAX	(TJ - TA)/θJA			W

TABLE 24-3: THERMAL PACKAGING CHARACTERISTICS

Characteristic	Symbol	Typ	Max	Unit	Notes
Package Thermal Resistance, 44-pin QFN	θJA	32	—	°C/W	1
Package Thermal Resistance, 44-pin TFQP	θJA	45	—	°C/W	1
Package Thermal Resistance, 28-pin SPDIP	θJA	45	—	°C/W	1
Package Thermal Resistance, 28-pin SOIC	θJA	50	—	°C/W	1
Package Thermal Resistance, 28-pin SSOP	θJA	71	—	°C/W	1
Package Thermal Resistance, 28-pin QFN-S	θJA	35	—	°C/W	1

Note 1: Junction to ambient thermal resistance, Theta-JA (θJA) numbers are achieved by package simulations.

© 2007-2012 Microchip Technology Inc.

TABLE 24-4: DC TEMPERATURE AND VOLTAGE SPECIFICATIONS

DC CHARACTERISTICS			Standard Operating Conditions: 3.0V to 3.6V (unless otherwise stated) Operating temperature -40°C ≤TA ≤+85°C for Industrial -40°C ≤TA ≤+125°C for Extended				
Param No.	**Symbol**	**Characteristic**	**Min**	**Typ(1)**	**Max**	**Units**	**Conditions**
Operating Voltage							
DC10	**Supply Voltage**						
	VDD	—	3.0	—	3.6	V	Industrial and Extended
DC12	VDR	**RAM Data Retention Voltage(2)**	1.8	—	—	V	—
DC16	VPOR	**VDD Start Voltage** to ensure internal Power-on Reset signal	—	—	VSS	V	—
DC17	SVDD	**VDD Rise Rate** to ensure internal Power-on Reset signal	0.03	—	—	V/ms	0-3.0V in 0.1s

Note 1: Data in "Typ" column is at 3.3V, 25°C unless otherwise stated.

2: This is the limit to which VDD may be lowered without losing RAM data.

TABLE 24-5: DC CHARACTERISTICS: OPERATING CURRENT (IDD)

DC CHARACTERISTICS			Standard Operating Conditions: 3.0V to 3.6V (unless otherwise stated) Operating temperature -40°C ≤TA ≤+85°C for Industrial -40°C ≤TA ≤+125°C for Extended			
Parameter No.(3)	**Typical(2)**	**Max**	**Units**	**Conditions**		
Operating Current (IDD)(1)						
DC20d	20	30	mA	-40°C	3.3V	10 MIPS(3)
DC20a	19	22	mA	+25°C		
DC20b	19	25	mA	+85°C		
DC20c	19	30	mA	+125°C		
DC21d	28	40	mA	-40°C	3.3V	16 MIPS(3)
DC21a	27	30	mA	+25°C		
DC21b	27	32	mA	+85°C		
DC21c	27	36	mA	+125°C		
DC22d	33	50	mA	-40°C	3.3V	20 MIPS(3)
DC22a	33	40	mA	+25°C		
DC22b	33	40	mA	+85°C		
DC22c	33	50	mA	+125°C		
DC23d	44	60	mA	-40°C	3.3V	30 MIPS(3)
DC23a	43	50	mA	+25°C		
DC23b	42	55	mA	+85°C		
DC23c	41	65	mA	+125°C		
DC24d	55	75	mA	-40°C	3.3V	40 MIPS
DC24a	54	65	mA	+25°C		
DC24b	52	70	mA	+85°C		
DC24c	51	80	mA	+125°C		

Note 1: IDD is primarily a function of the operating voltage and frequency. Other factors, such as I/O pin loading and switching rate, oscillator type, internal code execution pattern and temperature, also have an impact on the current consumption. The test conditions for all IDD measurements are as follows:

- Oscillator is configured in EC mode with PLL, OSC1 is driven with external square wave from rail-to-rail (EC clock overshoot/undershoot < 250 mV required)
- CLKO is configured as an I/O input pin in the Configuration word
- All I/O pins are configured as inputs and pulled to VSS
- $\overline{\text{MCLR}}$ = VDD, WDT and FSCM are disabled
- CPU, SRAM, program memory and data memory are operational
- No peripheral modules are operating; however, every peripheral is being clocked (defined PMDx bits are set to zero and unimplemented PMDx bits are set to one)
- CPU executing `while(1)` statement
- JTAG is disabled

2: These parameters are characterized but not tested in manufacturing.

3: Data in “Typ” column is at 3.3V, +25ºC unless otherwise stated.

© 2007-2012 Microchip Technology Inc.

TABLE 24-6: DC CHARACTERISTICS: IDLE CURRENT (IIDLE)

DC CHARACTERISTICS			Standard Operating Conditions: 3.0V to 3.6V (unless otherwise stated) Operating temperature -40°C ≤TA ≤+85°C for Industrial -40°C ≤TA ≤+125°C for Extended			
Parameter No.(3)	Typical(2)	Max	Units	Conditions		
Idle Current (IIDLE): Core OFF Clock ON Base Current(1)						
DC40d	7	20	mA	-40°C	3.3V	10 MIPS
DC40a	6	7	mA	+25°C		
DC40b	6	10	mA	+85°C		
DC40c	6	20	mA	+125°C		
DC41d	10	20	mA	-40°C	3.3V	16 MIPS
DC41a	8	9	mA	+25°C		
DC41b	8	10	mA	+85°C		
DC41c	8	20	mA	+125°C		
DC42d	11	20	mA	-40°C	3.3V	20 MIPS
DC42a	10	10	mA	+25°C		
DC42b	10	12	mA	+85°C		
DC42c	10	20	mA	+125°C		
DC43d	14	25	mA	-40°C	3.3V	30 MIPS
DC43a	13	14	mA	+25°C		
DC43b	13	15	mA	+85°C		
DC43c	13	25	mA	+125°C		
DC44d	14	25	mA	-40°C	3.3V	40 MIPS
DC44a	17	20	mA	+25°C		
DC44b	17	20	mA	+85°C		
DC44c	18	30	mA	+125°C		

Note 1: Base IIDLE current is measured as follows:

- CPU core is off, oscillator is configured in EC mode and external clock active, OSC1 is driven with external square wave from rail-to-rail (EC clock overshoot/undershoot < 250 mV required)
- CLKO is configured as an I/O input pin in the Configuration word
- All I/O pins are configured as inputs and pulled to VSS
- $\overline{\text{MCLR}}$ = VDD, WDT and FSCM are disabled
- No peripheral modules are operating; however, every peripheral is being clocked (defined PMDx bits are set to zero and unimplemented PMDx bits are set to one)
- JTAG is disabled

2: These parameters are characterized but not tested in manufacturing.

3: Data in “Typ” column is at 3.3V, +25ºC unless otherwise stated.

TABLE 24-7: DC CHARACTERISTICS: POWER-DOWN CURRENT (I_{PD})

DC CHARACTERISTICS			Standard Operating Conditions: 3.0V to 3.6V (unless otherwise stated) Operating temperature -40°C ≤TA ≤+85°C for Industrial -40°C ≤TA ≤+125°C for Extended			
Parameter No.(3)	**Typical(2)**	**Max**	**Units**	**Conditions**		
Power-Down Current (I_{PD})(1)						
DC60d	55	500	µA	-40°C	3.3V	Base Power-Down Current(3,4)
DC60a	63	300	µA	+25°C		
DC60b	85	350	µA	+85°C		
DC60c	146	600	µA	+125°C		
DC61d	8	15	µA	-40°C	3.3V	Watchdog Timer Current: ΔI_{WDT}(3,5)
DC61a	2	3	µA	+25°C		
DC61b	2	2	µA	+85°C		
DC61c	3	5	µA	+125°C		

Note 1: I_{PD} (Sleep) current is measured as follows:

- CPU core is off, oscillator is configured in EC mode and external clock active, OSC1 is driven with external square wave from rail-to-rail (EC clock overshoot/undershoot < 250 mV required)
- CLKO is configured as an I/O input pin in the Configuration word
- All I/O pins are configured as inputs and pulled to V_{SS}
- $\overline{MCLR}$ = V_{DD}, WDT and FSCM are disabled, all peripheral modules are disabled (PMDx bits are all ones)
- VREGS bit (RCON<8>) = 0 (i.e., core regulator is set to stand-by while the device is in Sleep mode)
- RTCC is disabled.
- JTAG is disabled

2: Data in the "Typ" column is at 3.3V, +25ºC unless otherwise stated.

3: The Watchdog Timer Current is the additional current consumed when the WDT module is enabled. This current should be added to the base I_{PD} current.

4: These currents are measured on the device containing the most memory in this family.

5: These parameters are characterized, but are not tested in manufacturing.

© 2007-2012 Microchip Technology Inc.

TABLE 24-8: DC CHARACTERISTICS: DOZE CURRENT (IDOZE)

DC CHARACTERISTICS			Standard Operating Conditions: 3.0V to 3.6V (unless otherwise stated) Operating temperature -40°C ≤TA ≤+85°C for Industrial -40°C ≤TA ≤+125°C for Extended				
Parameter No.(3)	**Typical(2)**	**Max**	**Doze Ratio**	**Units**	**Conditions**		
Doze Current (IDOZE)(1)							
DC73a	41	51	1:2	mA	-40°C	3.3V	40 MIPS
DC73f	20	28	1:64	mA			
DC73g	19	24	1:128	mA			
DC70a	40	46	1:2	mA	+25°C	3.3V	40 MIPS
DC70f	18	20	1:64	mA			
DC70g	18	20	1:128	mA			
DC71a	40	46	1:2	mA	+85°C	3.3V	40 MIPS
DC71f	18	25	1:64	mA			
DC71g	18	20	1:128	mA			
DC72a	39	55	1:2	mA	+125°C	3.3V	40 MIPS
DC72f	18	30	1:64	mA			
DC72g	18	25	1:128	mA			

Note 1: IDOZE is primarily a function of the operating voltage and frequency. Other factors, such as I/O pin loading and switching rate, oscillator type, internal code execution pattern and temperature, also have an impact on the current consumption. The test conditions for all IDOZE measurements are as follows:

- Oscillator is configured in EC mode and external clock active, OSC1 is driven with external square wave from rail-to-rail with overshoot/undershoot < 250 mV
- CLKO is configured as an I/O input pin in the Configuration word
- All I/O pins are configured as inputs and pulled to VSS
- $\overline{\text{MCLR}}$ = VDD, WDT and FSCM are disabled
- CPU, SRAM, program memory and data memory are operational
- No peripheral modules are operating; however, every peripheral is being clocked (defined PMDx bits are set to zero and unimplemented PMDx bits are set to one)
- CPU executing `while(1)` statement
- JTAG is disabled

2: Data in the “Typ” column is at 3.3V, +25ºC unless otherwise stated.

TABLE 24-9: DC CHARACTERISTICS: I/O PIN INPUT SPECIFICATIONS

DC CHARACTERISTICS			Standard Operating Conditions: 3.0V to 3.6V (unless otherwise stated) Operating temperature -40°C ≤TA ≤+85°C for Industrial -40°C ≤TA ≤+125°C for Extended				
Param No.	**Symbol**	**Characteristic**	**Min**	**Typ(1)**	**Max**	**Units**	**Conditions**
	VIL	**Input Low Voltage**					
DI10		I/O pins	VSS	—	0.2 VDD	V	
DI15		MCLR	VSS	—	0.2 VDD	V	
DI16		I/O Pins with OSC1 or SOSCI	VSS	—	0.2 VDD	V	
DI18		SDAx, SCLx	VSS	—	0.3 VDD	V	SMBus disabled
DI19		SDAx, SCLx	VSS	—	0.8 V	V	SMBus enabled
	VIH	**Input High Voltage**					
DI20		I/O Pins Not 5V Tolerant(4) I/O Pins 5V Tolerant(4)	0.7 VDD 0.7 VDD	— —	VDD 5.5	V V	
DI28		SDAx, SCLx	0.7 VDD	—	5.5	V	SMBus disabled
DI29		SDAx, SCLx	2.1	—	5.5	V	SMBus enabled
	ICNPU	**CNx Pull-up Current**					
DI30			50	250	400	µA	VDD = 3.3V, VPIN = VSS

Note 1: Data in “Typ” column is at 3.3V, 25°C unless otherwise stated.

2: The leakage current on the MCLR pin is strongly dependent on the applied voltage level. The specified levels represent normal operating conditions. Higher leakage current may be measured at different input voltages.

3: Negative current is defined as current sourced by the pin.

4: See **“Pin Diagrams”** for a list of digital-only and analog pins.

5: VIL source < (VSS – 0.3). Characterized but not tested.

6: Non-5V tolerant pins VIH source > (VDD + 0.3), 5V tolerant pins VIH source > 5.5V. Characterized but not tested.

7: Digital 5V tolerant pins cannot tolerate any “positive” input injection current from input sources > 5.5V.

8: Injection currents > | 0 | can affect the ADC results by approximately 4-6 counts.

9: Any number and/or combination of I/O pins not excluded under IICL or IICH conditions are permitted provided the mathematical “absolute instantaneous” sum of the input injection currents from all pins do not exceed the specified limit. Characterized but not tested.

© 2007-2012 Microchip Technology Inc.

TABLE 24-9: DC CHARACTERISTICS: I/O PIN INPUT SPECIFICATIONS (CONTINUED)

DC CHARACTERISTICS			Standard Operating Conditions: 3.0V to 3.6V (unless otherwise stated) Operating temperature -40°C ≤TA ≤+85°C for Industrial -40°C ≤TA ≤+125°C for Extended				
Param No.	**Symbol**	**Characteristic**	**Min**	**Typ(1)**	**Max**	**Units**	**Conditions**
	IIL	**Input Leakage Current(2,3)**					
DI50		I/O Pins 5V Tolerant(4)	—	—	±2	µA	VSS ≤VPIN ≤VDD, Pin at high-impedance
DI51		I/O Pins Not 5V Tolerant(4)	—	—	±1	µA	VSS ≤VPIN ≤VDD, Pin at high-impedance, -40°C ≤TA ≤+85°C
DI51a		I/O Pins Not 5V Tolerant(4)	—	—	±2	µA	Shared with external reference pins, -40°C ≤TA ≤+85°C
DI51b		I/O Pins Not 5V Tolerant(4)	—	—	±3.5	µA	VSS ≤VPIN ≤VDD, Pin at high-impedance, -40°C ≤TA ≤+125°C
DI51c		I/O Pins Not 5V Tolerant(4)	—	—	±8	µA	Analog pins shared with external reference pins, -40°C ≤TA ≤+125°C
DI55		$\overline{\text{MCLR}}$	—	—	±2	µA	VSS ≤VPIN ≤VDD
DI56		OSC1	—	—	±2	µA	VSS ≤VPIN ≤VDD, XT and HS modes

Note 1: Data in “Typ” column is at 3.3V, 25°C unless otherwise stated.

2: The leakage current on the $\overline{\text{MCLR}}$ pin is strongly dependent on the applied voltage level. The specified levels represent normal operating conditions. Higher leakage current may be measured at different input voltages.

3: Negative current is defined as current sourced by the pin.

4: See **“Pin Diagrams”** for a list of digital-only and analog pins.

5: VIL source < (VSS – 0.3). Characterized but not tested.

6: Non-5V tolerant pins VIH source > (VDD + 0.3), 5V tolerant pins VIH source > 5.5V. Characterized but not tested.

7: Digital 5V tolerant pins cannot tolerate any “positive” input injection current from input sources > 5.5V.

8: Injection currents > | 0 | can affect the ADC results by approximately 4-6 counts.

9: Any number and/or combination of I/O pins not excluded under IICL or IICH conditions are permitted provided the mathematical “absolute instantaneous” sum of the input injection currents from all pins do not exceed the specified limit. Characterized but not tested.

TABLE 24-9: DC CHARACTERISTICS: I/O PIN INPUT SPECIFICATIONS (CONTINUED)

DC CHARACTERISTICS			Standard Operating Conditions: 3.0V to 3.6V (unless otherwise stated) Operating temperature -40°C ≤TA ≤+85°C for Industrial -40°C ≤TA ≤+125°C for Extended				
Param No.	**Symbol**	**Characteristic**	**Min**	**Typ(1)**	**Max**	**Units**	**Conditions**
DI60a	IICL	**Input Low Injection Current**	0	—	-5(5,8)	mA	All pins except VDD, VSS, AVDD, AVSS, MCLR, VCAP, SOSCI, SOSCO, and RB14
DI60b	IICH	**Input High Injection Current**	0	—	+5(6,7,8)	mA	All pins except VDD, VSS, AVDD, AVSS, MCLR, VCAP, SOSCI, SOSCO, RB14, and digital 5V-tolerant designated pins
DI60c	∑IICT	**Total Input Injection Current (sum of all I/O and control pins)**	-20(9)	—	+20(9)	mA	Absolute instantaneous sum of all ± input injection currents from all I/O pins (| IICL + | IICH |) ≤∑IICT

Note 1: Data in "Typ" column is at 3.3V, 25°C unless otherwise stated.

2: The leakage current on the MCLR pin is strongly dependent on the applied voltage level. The specified levels represent normal operating conditions. Higher leakage current may be measured at different input voltages.

3: Negative current is defined as current sourced by the pin.

4: See **"Pin Diagrams"** for a list of digital-only and analog pins.

5: VIL source < (VSS – 0.3). Characterized but not tested.

6: Non-5V tolerant pins VIH source > (VDD + 0.3), 5V tolerant pins VIH source > 5.5V. Characterized but not tested.

7: Digital 5V tolerant pins cannot tolerate any "positive" input injection current from input sources > 5.5V.

8: Injection currents > | 0 | can affect the ADC results by approximately 4-6 counts.

9: Any number and/or combination of I/O pins not excluded under IICL or IICH conditions are permitted provided the mathematical "absolute instantaneous" sum of the input injection currents from all pins do not exceed the specified limit. Characterized but not tested.

© 2007-2012 Microchip Technology Inc.

TABLE 24-10: DC CHARACTERISTICS: I/O PIN OUTPUT SPECIFICATIONS

DC CHARACTERISTICS			Standard Operating Conditions: 3.0V to 3.6V (unless otherwise stated) Operating temperature -40°C ≤ TA ≤ +85°C for Industrial -40°C ≤ TA ≤ +125°C for Extended				
Param.	**Symbol**	**Characteristic**	**Min.**	**Typ.**	**Max.**	**Units**	**Conditions**
DO10	VOL	**Output Low Voltage** I/O Pins: 2x Sink Driver Pins - All pins not defined by 4x or 8x driver pins	—	—	0.4	V	IOL ≤3 mA, VDD = 3.3V
		Output Low Voltage I/O Pins: 4x Sink Driver Pins - RA0, RA1, RB5, RB6, RB8, RB9, RB14	—	—	0.4	V	IOL ≤6 mA, VDD = 3.3V
		Output Low Voltage I/O Pins: 8x Sink Driver Pins - OSCO, CLKO, RA3	—	—	0.4	V	IOL ≤10 mA, VDD = 3.3V
DO20	VOH	**Output High Voltage** I/O Pins: 2x Source Driver Pins - All pins not defined by 4x or 8x driver pins	2.4	—	—	V	IOL ≥ -3 mA, VDD = 3.3V
		Output High Voltage I/O Pins: 4x Source Driver Pins - RA0, RA1, RB5, RB6, RB8, RB9, RB14	2.4	—	—	V	IOL ≥ -6 mA, VDD = 3.3V
		Output High Voltage I/O Pins: 8x Source Driver Pins - OSCO, CLKO, RA3	2.4	—	—	V	IOL ≥ -10 mA, VDD = 3.3V
DO20A	VOH1	**Output High Voltage** I/O Pins: 2x Source Driver Pins - All pins not defined by 4x or 8x driver pins	1.5	—	—	V	IOH ≥ -6 mA, VDD = 3.3V See **Note 1**
			2.0	—	—		IOH ≥ -5 mA, VDD = 3.3V See **Note 1**
			3.0	—	—		IOH ≥ -2 mA, VDD = 3.3V See **Note 1**
		Output High Voltage 4x Source Driver Pins - RA0, RA1, RB5, RB6, RB8, RB9, RB14	1.5	—	—	V	IOH ≥ -12 mA, VDD = 3.3V See **Note 1**
			2.0	—	—		IOH ≥ -11 mA, VDD = 3.3V See **Note 1**
			3.0	—	—		IOH ≥ -3 mA, VDD = 3.3V See **Note 1**
		Output High Voltage 8x Source Driver Pins - OSCO, CLKO, RA3	1.5	—	—	V	IOH ≥ -16 mA, VDD = 3.3V See **Note 1**
			2.0	—	—		IOH ≥ -12 mA, VDD = 3.3V See **Note 1**
			3.0	—	—		IOH ≥ -4 mA, VDD = 3.3V See **Note 1**

Note 1: Parameters are characterized, but not tested.

TABLE 24-11: ELECTRICAL CHARACTERISTICS: BOR

DC CHARACTERISTICS			Standard Operating Conditions: 3.0V to 3.6V (unless otherwise stated) Operating temperature -40°C ≤TA ≤+85°C for Industrial -40°C ≤TA ≤+125°C for Extended				
Param No.	**Symbol**	**Characteristic(1)**	**Min**	**Typ**	**Max**	**Units**	**Conditions**
BO10	VBOR	BOR Event on VDD transition	2.40	—	2.55	V	See **Note 2**

Note 1: Parameters are for design guidance only and are not tested in manufacturing.

2: Device is functional at VBORMIN < VDD < VDDMIN. Analog modules such as the ADC will have degraded performance. Device functionality is tested but not characterized.

TABLE 24-12: DC CHARACTERISTICS: PROGRAM MEMORY

DC CHARACTERISTICS			Standard Operating Conditions: 3.0V to 3.6V (unless otherwise stated) Operating temperature -40°C ≤TA ≤+85°C for Industrial -40°C ≤TA ≤+125°C for Extended				
Param No.	**Symbol**	**Characteristic(3)**	**Min**	**Typ(1)**	**Max**	**Units**	**Conditions**
		Program Flash Memory					
D130	EP	Cell Endurance	10,000	—	—	E/W	-40° C to +125° C
D131	VPR	VDD for Read	VMIN	—	3.6	V	VMIN = Minimum operating voltage
D132B	VPEW	VDD for Self-Timed Write	VMIN	—	3.6	V	VMIN = Minimum operating voltage
D134	TRETD	Characteristic Retention	20	—	—	Year	Provided no other specifications are violated, -40° C to +125° C
D135	IDDP	Supply Current during Programming	—	10	—	mA	
D136a	TRW	Row Write Time	1.32	—	1.74	ms	TRW = 11064 FRC cycles, TA = +85°C, See **Note 2**
D136b	TRW	Row Write Time	1.28	—	1.79	ms	TRW = 11064 FRC cycles, TA = +150°C, See **Note 2**
D137a	TPE	Page Erase Time	20.1	—	26.5	ms	TPE = 168517 FRC cycles, TA = +85°C, See **Note 2**
D137b	TPE	Page Erase Time	19.5	—	27.3	ms	TPE = 168517 FRC cycles, TA = +150°C, See **Note 2**
D138a	TWW	Word Write Cycle Time	42.3	—	55.9	µs	TWW = 355 FRC cycles, TA = +85°C, See **Note 2**
D138b	TWW	Word Write Cycle Time	41.1	—	57.6	µs	TWW = 355 FRC cycles, TA = +150°C, See **Note 2**

Note 1: Data in "Typ" column is at 3.3V, 25°C unless otherwise stated.

2: Other conditions: FRC = 7.37 MHz, TUN<5:0> = `b'011111` (for Min), TUN<5:0> = `b'100000` (for Max). This parameter depends on the FRC accuracy (see Table 24-18) and the value of the FRC Oscillator Tuning register (see Register 8-4). For complete details on calculating the Minimum and Maximum time see **Section 5.3 "Programming Operations"**.

3: These parameters are assured by design, but are not characterized or tested in manufacturing.

© 2007-2012 Microchip Technology Inc.

TABLE 24-13: INTERNAL VOLTAGE REGULATOR SPECIFICATIONS

Standard Operating Conditions: 3.0V to 3.6V (unless otherwise stated) Operating temperature -40°C ≤TA ≤+85°C for Industrial -40°C ≤TA ≤+125°C for Extended							
Param No.	**Symbol**	**Characteristics**	**Min**	**Typ**	**Max**	**Units**	**Comments**
—	CEFC	External Filter Capacitor Value(1)	4.7	10	—	µF	Capacitor must be low series resistance (< 5 ohms)

Note 1: Typical VCAP voltage = 2.5V when VDD ≥ VDDMIN.

24.2 AC Characteristics and Timing Parameters

This section defines dsPIC33FJ32MC202/204 and dsPIC33FJ16MC304 AC characteristics and timing parameters.

TABLE 24-14: TEMPERATURE AND VOLTAGE SPECIFICATIONS – AC

AC CHARACTERISTICS	**Standard Operating Conditions: 3.0V to 3.6V (unless otherwise stated)** Operating temperature -40°C ≤TA ≤+85°C for Industrial -40°C ≤TA ≤+125°C for Extended Operating voltage VDD range as described in Table 24-1.

FIGURE 24-1: LOAD CONDITIONS FOR DEVICE TIMING SPECIFICATIONS

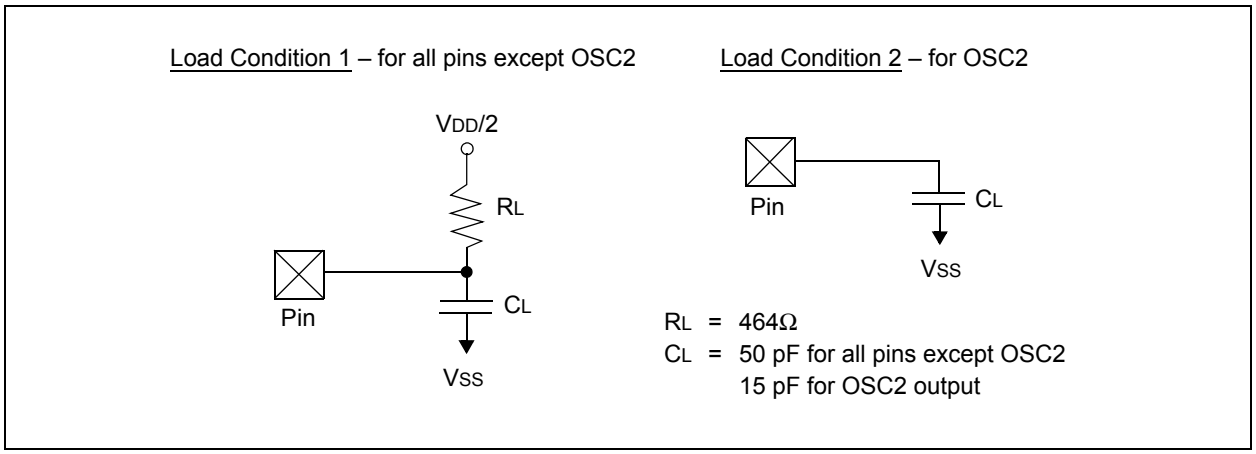

TABLE 24-15: CAPACITIVE LOADING REQUIREMENTS ON OUTPUT PINS

Param No.	Symbol	Characteristic	Min	Typ	Max	Units	Conditions
DO50	COSC2	OSC2/SOSC2 pin	—	—	15	pF	In XT and HS modes when external clock is used to drive OSC1
DO56	CIO	All I/O pins and OSC2	—	—	50	pF	EC mode
DO58	CB	SCLx, SDAx	—	—	400	pF	In I^2C™ mode

© 2007-2012 Microchip Technology Inc.

FIGURE 24-2: EXTERNAL CLOCK TIMING

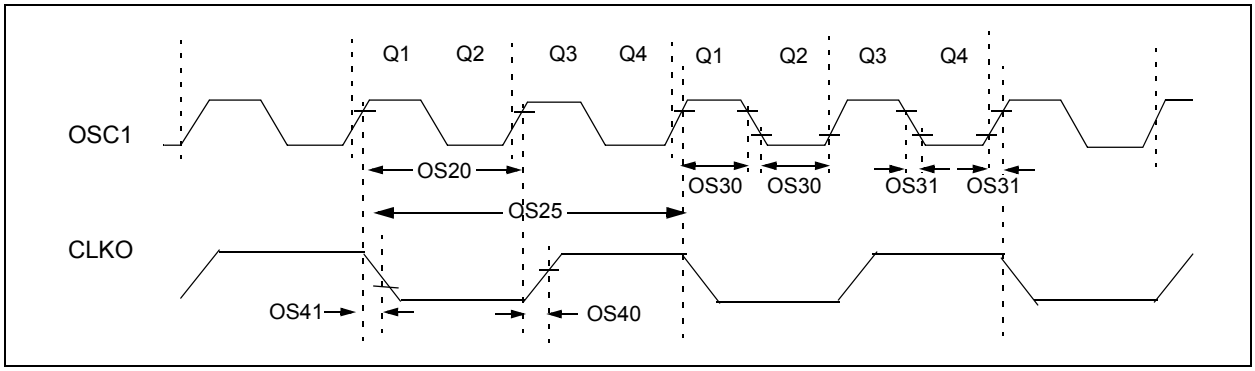

TABLE 24-16: EXTERNAL CLOCK TIMING REQUIREMENTS

AC CHARACTERISTICS			Standard Operating Conditions: 3.0V to 3.6V (unless otherwise stated) Operating temperature -40°C ≤TA ≤+85°C for Industrial -40°C ≤TA ≤+125°C for Extended				
Param No.	**Symb**	**Characteristic**	**Min**	**Typ(1)**	**Max**	**Units**	**Conditions**
OS10	FIN	External CLKI Frequency(4) (External clocks allowed only in EC and ECPLL modes)	DC	—	40	MHz	EC
		Oscillator Crystal Frequency(5)	3.5 10	— —	10 40	MHz MHz	XT HS
				—	33	kHz	Sosc
OS20	TOSC	TOSC = 1/FOSC(4)	12.5	—	DC	ns	—
OS25	TCY	Instruction Cycle Time(2,4)	25	—	DC	ns	—
OS30	TosL, TosH	External Clock in (OSC1)(5) High or Low Time	0.375 x TOSC	—	0.625 x TOSC	ns	EC
OS31	TosR, TosF	External Clock in (OSC1)(5) Rise or Fall Time	—	—	20	ns	EC
OS40	TckR	CLKO Rise Time(3,5)	—	5.2	—	ns	—
OS41	TckF	CLKO Fall Time(3,5)	—	5.2	—	ns	—
OS42	GM	External Oscillator Transconductance(6)	14	16	18	mA/V	VDD = 3.3V TA = +25ºC

Note 1: Data in “Typ” column is at 3.3V, 25°C unless otherwise stated.

2: Instruction cycle period (TCY) equals two times the input oscillator time-base period. All specified values are based on characterization data for that particular oscillator type under standard operating conditions with the device executing code. Exceeding these specified limits may result in an unstable oscillator operation and/or higher than expected current consumption. All devices are tested to operate at “min.” values with an external clock applied to the OSC1/CLKI pin. When an external clock input is used, the “max.” cycle time limit is “DC” (no clock) for all devices.

3: Measurements are taken in EC mode. The CLKO signal is measured on the OSC2 pin.

4: These parameters are characterized by similarity, but are tested in manufacturing at FIN = 40 MHz only.

5: These parameters are characterized by similarity, but are not tested in manufacturing.

6: Data for this parameter is preliminary. This parameter is characterized, but is not tested in manufacturing.

TABLE 24-17: PLL CLOCK TIMING SPECIFICATIONS (VDD = 3.0V TO 3.6V)

AC CHARACTERISTICS			Standard Operating Conditions: 3.0V to 3.6V (unless otherwise stated) Operating temperature -40°C ≤TA ≤+85°C for Industrial -40°C ≤TA ≤+125°C for Extended				
Param No.	**Symbol**	**Characteristic**	**Min**	**Typ(1)**	**Max**	**Units**	**Conditions**
OS50	FPLLI	PLL Voltage Controlled Oscillator (VCO) Input Frequency Range(2)	0.8	—	8	MHz	ECPLL, XTPLL modes
OS51	FSYS	On-Chip VCO System Frequency(3)	100	—	200	MHz	—
OS52	TLOCK	PLL Start-up Time (Lock Time)(3)	0.9	1.5	3.1	mS	—
OS53	DCLK	CLKO Stability (Jitter)(3)	-3	0.5	3	%	Measured over 100 ms period

Note 1: Data in "Typ" column is at 3.3V, 25°C unless otherwise stated. Parameters are for design guidance only and are not tested.

2: These parameters are characterized by similarity, but are tested in manufacturing at 7.7 MHz input only.

3: These parameters are characterized by similarity, but are not tested in manufacturing. This specification is based on clock cycle by clock cycle measurements. To calculate the effective jitter for individual time bases or communication clocks use this formula:

$$Peripheral\ Clock\ Jitter = \frac{DCLK}{\sqrt{\left(\frac{FOSC}{Peripheral\ Bit\ Rate\ Clock}\right)}}$$

For example: Fosc = 32 MHz, DCLK = 3%, SPI bit rate clock, (i.e., SCK) is 2 MHz.

$$SPI\ SCK\ Jitter = \left[\frac{DCLK}{\sqrt{\left(\frac{32\ MHz}{2\ MHz}\right)}}\right] = \left[\frac{3\%}{\sqrt{16}}\right] = \left[\frac{3\%}{4}\right] = 0.75\%$$

TABLE 24-18: AC CHARACTERISTICS: INTERNAL RC ACCURACY

AC CHARACTERISTICS		Standard Operating Conditions: 3.0V to 3.6V (unless otherwise stated) Operating temperature -40°C ≤TA ≤+85°C for industrial -40°C ≤TA ≤+125°C for Extended					
Param No.	**Characteristic**	**Min**	**Typ**	**Max**	**Units**	**Conditions**	
	Internal FRC Accuracy @ FRC Frequency = 7.37 MHz(1)						
F20a	FRC	-2	—	+2	%	-40°C ≤TA ≤+85°C	VDD = 3.0-3.6V
F20b	FRC	-5	—	+5	%	-40°C ≤TA ≤+125°C	VDD = 3.0-3.6V

Note 1: Frequency calibrated at 25°C and 3.3V. TUN bits can be used to compensate for temperature drift.

TABLE 24-19: INTERNAL RC ACCURACY

AC CHARACTERISTICS		Standard Operating Conditions: 3.0V to 3.6V (unless otherwise stated) Operating temperature -40°C ≤TA ≤+85°C for Industrial -40°C ≤TA ≤+125°C for Extended					
Param No.	**Characteristic**	**Min**	**Typ**	**Max**	**Units**	**Conditions**	
	LPRC @ 32.768 kHz(1,2)						
F21a	LPRC	-15	±6	+15	%	-40°C ≤TA ≤+85°C	VDD = 3.0-3.6V
F21b	LPRC	-40	—	+40	%	-40°C ≤TA ≤+125°C	VDD = 3.0-3.6V

Note 1: Change of LPRC frequency as VDD changes.

2: LPRC impacts the Watchdog Timer Time-out Period (TWDT1). See **Section 21.4 "Watchdog Timer (WDT)"** for more information.

© 2007-2012 Microchip Technology Inc.

FIGURE 24-3: I/O TIMING CHARACTERISTICS

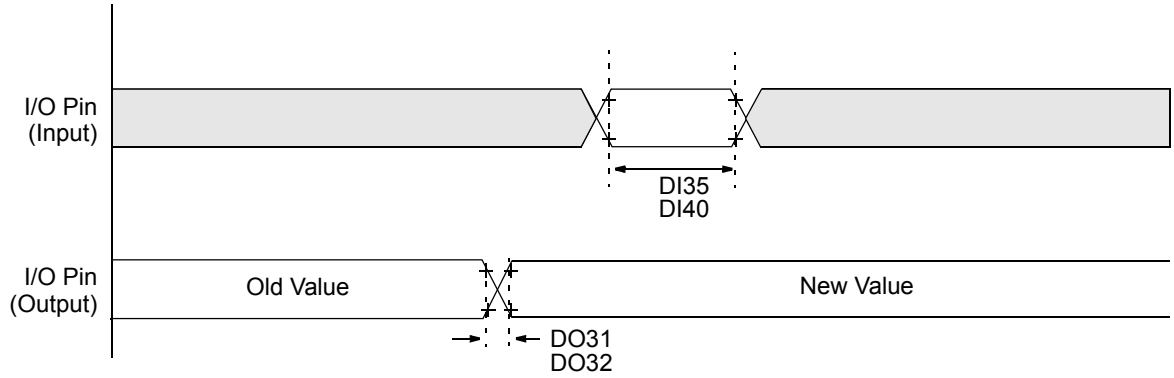

Note: Refer to Figure 24-1 for load conditions.

TABLE 24-20: I/O TIMING REQUIREMENTS

AC CHARACTERISTICS		Standard Operating Conditions: 3.0V to 3.6V (unless otherwise stated) Operating temperature -40°C ≤TA ≤+85°C for Industrial -40°C ≤TA ≤+125°C for Extended					
Param No.	**Symbol**	**Characteristic(2)**	**Min**	**Typ(1)**	**Max**	**Units**	**Conditions**
DO31	TIOR	Port Output Rise Time	—	10	25	ns	—
DO32	TIOF	Port Output Fall Time	—	10	25	ns	—
DI35	TINP	INTx Pin High or Low Time (input)	25	—	—	ns	—
DI40	TRBP	CNx High or Low Time (input)	2	—	—	TCY	—

Note 1: Data in "Typ" column is at 3.3V, 25°C unless otherwise stated.

2: These parameters are characterized, but are not tested in manufacturing.

FIGURE 24-4: RESET, WATCHDOG TIMER, OSCILLATOR START-UP TIMER AND POWER-UP TIMER TIMING CHARACTERISTICS

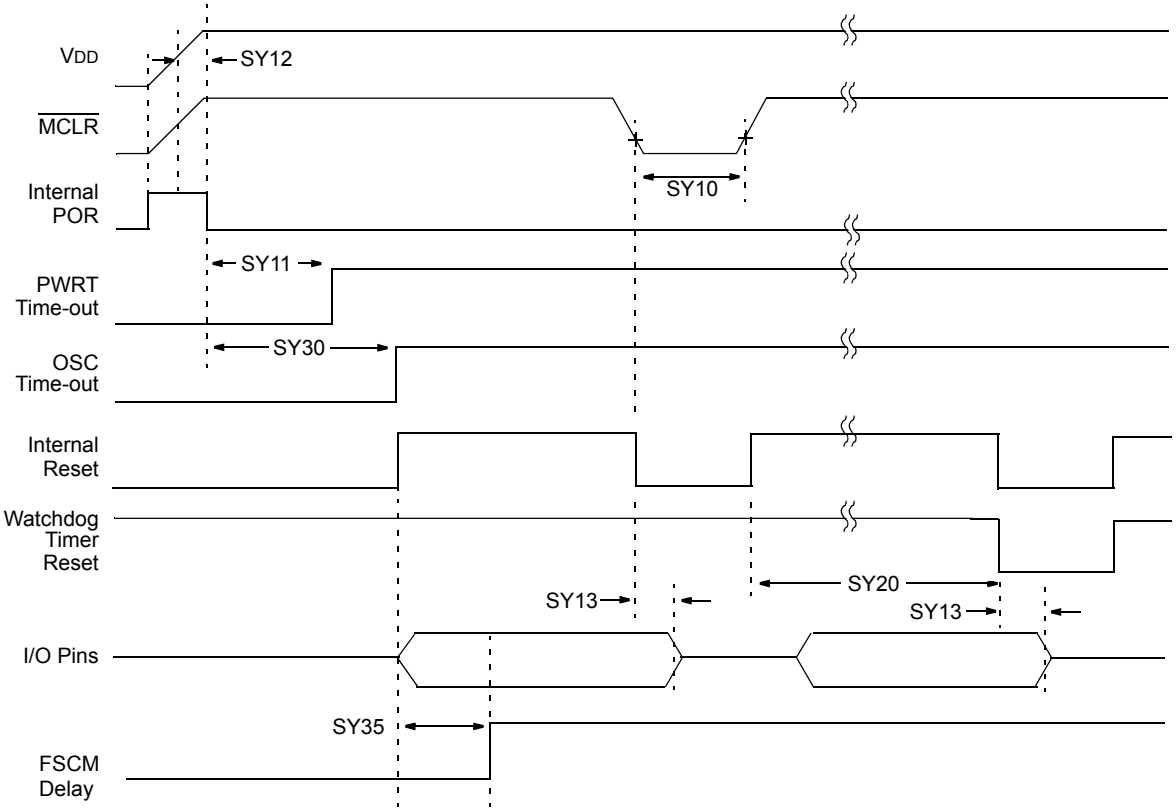

Note: Refer to Figure 24-1 for load conditions.

© 2007-2012 Microchip Technology Inc.

TABLE 24-21: RESET, WATCHDOG TIMER, OSCILLATOR START-UP TIMER, POWER-UP TIMER TIMING REQUIREMENTS

AC CHARACTERISTICS			Standard Operating Conditions: 3.0V to 3.6V (unless otherwise stated) Operating temperature -40°C ≤TA ≤+85°C for Industrial -40°C ≤TA ≤+125°C for Extended				
Param No.	**Symbol**	**Characteristic**	**Min**	**Typ(2)**	**Max**	**Units**	**Conditions**
SY10	TMCL	$\overline{\text{MCLR}}$ Pulse Width (low)(1)	2	—	—	µs	-40°C to +85°C
SY11	TPWRT	Power-up Timer Period(1)	—	2 4 8 16 32 64 128	—	ms	-40°C to +85°C User programmable
SY12	TPOR	Power-on Reset Delay(3)	3	10	30	µs	-40°C to +85°C
SY13	TIOZ	I/O High-Impedance from $\overline{\text{MCLR}}$ Low or Watchdog Timer Reset(1)	0.68	0.72	1.2	µs	—
SY20	TWDT1	Watchdog Timer Time-out Period (1)	—	—	—	ms	See **Section 21.4 "Watchdog Timer (WDT)"** and LPRC parameter F21a (Table 24-21).
SY30	TOST	Oscillator Start-up Time	—	1024 TOSC	—	—	TOSC = OSC1 period
SY35	TFSCM	Fail-Safe Clock Monitor Delay(1)	—	500	900	µs	-40°C to +85°C

Note 1: These parameters are characterized but not tested in manufacturing.

2: Data in "Typ" column is at 3.3V, 25°C unless otherwise stated.

3: These parameters are characterized by similarity, but are not tested in manufacturing.

FIGURE 24-5: TIMER1, 2 AND 3 EXTERNAL CLOCK TIMING CHARACTERISTICS

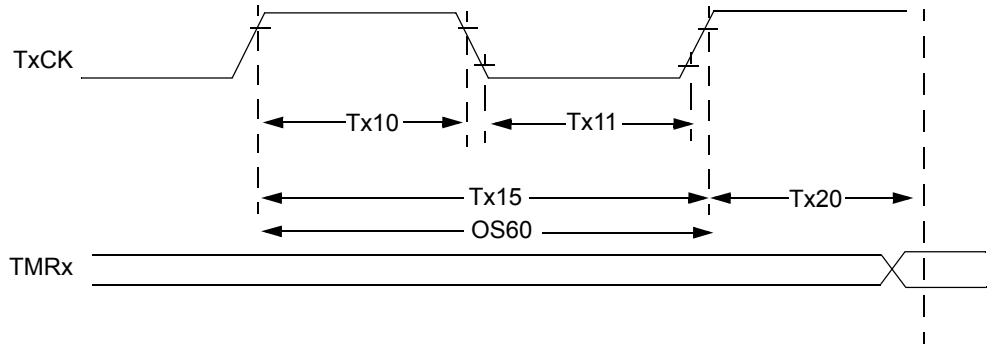

Note: Refer to Figure 24-1 for load conditions.

TABLE 24-22: TIMER1 EXTERNAL CLOCK TIMING REQUIREMENTS(1)

AC CHARACTERISTICS				Standard Operating Conditions: 3.0V to 3.6V (unless otherwise stated) Operating temperature -40°C ≤TA ≤+85°C for Industrial -40°C ≤TA ≤+125°C for Extended				
Param No.	**Symbol**	**Characteristic(2)**		**Min**	**Typ**	**Max**	**Units**	**Conditions**
TA10	TTXH	TxCK High Time	Synchronous, no prescaler	0.5 TCY + 20	—	—	ns	Must also meet parameter TA15
			Synchronous, with prescaler	10	—	—	ns	
			Asynchronous	10	—	—	ns	
TA11	TTXL	TxCK Low Time	Synchronous, no prescaler	0.5 TCY + 20	—	—	ns	Must also meet parameter TA15
			Synchronous, with prescaler	10	—	—	ns	
			Asynchronous	10	—	—	ns	
TA15	TTXP	TxCK Input Period	Synchronous, no prescaler	TCY + 40	—	—	ns	—
			Synchronous, with prescaler	Greater of: 20 ns or (TCY + 40)/N	—	—	—	N = prescale value (1, 8, 64, 256)
			Asynchronous	20	—	—	ns	—
OS60	Ft1	SOSC1/T1CK Oscillator Input frequency Range (oscillator enabled by setting bit TCS (T1CON<1>))		DC	—	50	kHz	—
TA20	TCKEXTMRL	Delay from External TxCK Clock Edge to Timer Increment		0.5 TCY		1.5 TCY	—	—

Note 1: Timer1 is a Type A.

2: These parameters are characterized by similarity, but are not tested in manufacturing.

© 2007-2012 Microchip Technology Inc.

TABLE 24-23: TIMER2 EXTERNAL CLOCK TIMING REQUIREMENTS

AC CHARACTERISTICS				Standard Operating Conditions: 3.0V to 3.6V (unless otherwise stated) Operating temperature -40°C ≤TA ≤+85°C for Industrial -40°C ≤TA ≤+125°C for Extended				
Param No.	**Symbol**	**Characteristic(1)**		**Min**	**Typ**	**Max**	**Units**	**Conditions**
TB10	TtxH	TxCK High Time	Synchronous mode	Greater of: 20 or (TCY + 20)/N	—	—	ns	Must also meet parameter TB15 N = prescale value (1, 8, 64, 256)
TB11	TtxL	TxCK Low Time	Synchronous mode	Greater of: 20 or (TCY + 20)/N	—	—	ns	Must also meet parameter TB15 N = prescale value (1, 8, 64, 256)
TB15	TtxP	TxCK Input Period	Synchronous mode	Greater of: 40 or (2 TCY + 40)/N	—	—	ns	N = prescale value (1, 8, 64, 256)
TB20	TCKEXTMRL	Delay from External TxCK Clock Edge to Timer Increment		0.75 TCY + 40	—	1.75 TCY + 40	ns	—

Note 1: These parameters are characterized, but are not tested in manufacturing.

TABLE 24-24: TIMER3 EXTERNAL CLOCK TIMING REQUIREMENTS

AC CHARACTERISTICS				Standard Operating Conditions: 3.0V to 3.6V (unless otherwise stated) Operating temperature -40°C ≤TA ≤+85°C for Industrial -40°C ≤TA ≤+125°C for Extended				
Param No.	**Symbol**	**Characteristic(1)**		**Min**	**Typ**	**Max**	**Units**	**Conditions**
TC10	TtxH	TxCK High Time	Synchronous	TCY + 20	—	—	ns	Must also meet parameter TC15
TC11	TtxL	TxCK Low Time	Synchronous	TCY + 20	—	—	ns	Must also meet parameter TC15
TC15	TtxP	TxCK Input Period	Synchronous, with prescaler	2 TCY + 40	—	—	ns	N = prescale value (1, 8, 64, 256)
TC20	TCKEXTMRL	Delay from External TxCK Clock Edge to Timer Increment		0.75 TCY + 40	—	1.75 TCY + 40	ns	—

Note 1: These parameters are characterized, but are not tested in manufacturing.

FIGURE 24-6: TIMERQ (QEI MODULE) EXTERNAL CLOCK TIMING CHARACTERISTICS

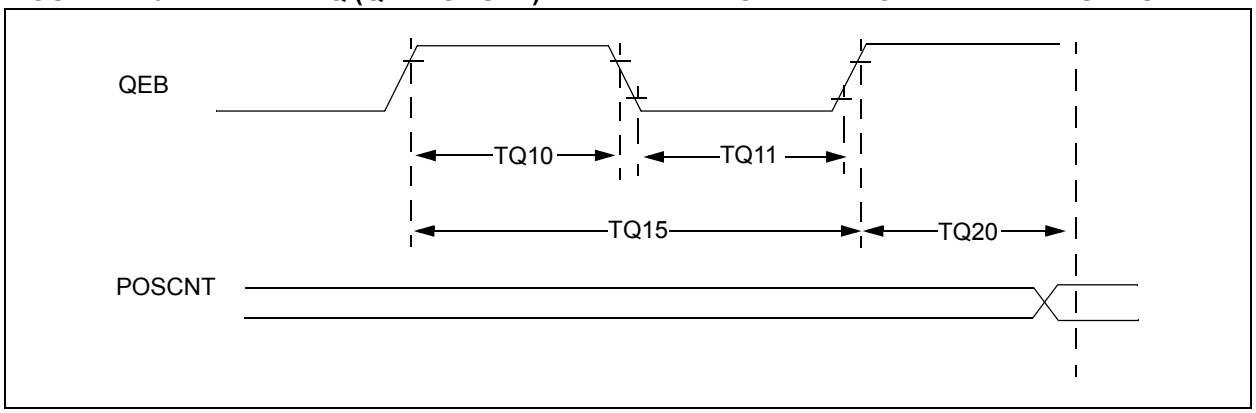

TABLE 24-25: QEI MODULE EXTERNAL CLOCK TIMING REQUIREMENTS

AC CHARACTERISTICS				Standard Operating Conditions: 3.0V to 3.6V (unless otherwise stated) Operating temperature -40°C ≤TA ≤+85°C for Industrial -40°C ≤TA ≤+125°C for Extended				
Param No.	**Symbol**	**Characteristic(1)**		**Min**	**Typ**	**Max**	**Units**	**Conditions**
TQ10	TtQH	TQCK High Time	Synchronous, with prescaler	TCY + 20	—	—	ns	Must also meet parameter TQ15
TQ11	TtQL	TQCK Low Time	Synchronous, with prescaler	TCY + 20	—	—	ns	Must also meet parameter TQ15
TQ15	TtQP	TQCP Input Period	Synchronous, with prescaler	2 * TCY + 40	—	—	ns	—
TQ20	TCKEXTMRL	Delay from External TxCK Clock Edge to Timer Increment		0.5 TCY	—	1.5 TCY	—	—

Note 1: These parameters are characterized but not tested in manufacturing.

© 2007-2012 Microchip Technology Inc.

FIGURE 24-7: INPUT CAPTURE (CAPx) TIMING CHARACTERISTICS

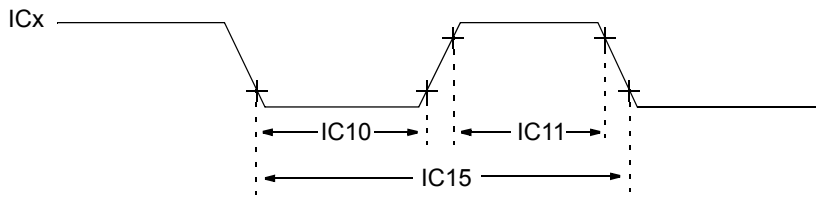

Note: Refer to Figure 24-1 for load conditions.

TABLE 24-26: INPUT CAPTURE TIMING REQUIREMENTS

AC CHARACTERISTICS				Standard Operating Conditions: 3.0V to 3.6V (unless otherwise stated) Operating temperature -40°C ≤TA ≤+85°C for Industrial -40°C ≤TA ≤+125°C for Extended			
Param No.	**Symbol**	**Characteristic(1)**		**Min**	**Max**	**Units**	**Conditions**
IC10	TccL	ICx Input Low Time	No Prescaler	0.5 TCY + 20	—	ns	—
			With Prescaler	10	—	ns	
IC11	TccH	ICx Input High Time	No Prescaler	0.5 TCY + 20	—	ns	—
			With Prescaler	10	—	ns	
IC15	TccP	ICx Input Period		(TCY + 40)/N	—	ns	N = prescale value (1, 4, 16)

Note 1: These parameters are characterized but not tested in manufacturing.

FIGURE 24-8: OUTPUT COMPARE MODULE (OCx) TIMING CHARACTERISTICS

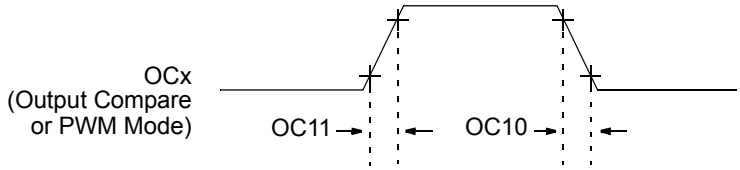

Note: Refer to Figure 24-1 for load conditions.

TABLE 24-27: OUTPUT COMPARE MODULE TIMING REQUIREMENTS

AC CHARACTERISTICS			Standard Operating Conditions: 3.0V to 3.6V (unless otherwise stated) Operating temperature -40°C ≤TA ≤+85°C for Industrial -40°C ≤TA ≤+125°C for Extended				
Param No.	**Symbol**	**Characteristic(1)**	**Min**	**Typ**	**Max**	**Units**	**Conditions**
OC10	TccF	OCx Output Fall Time	—	—	—	ns	See parameter D032
OC11	TccR	OCx Output Rise Time	—	—	—	ns	See parameter D031

Note 1: These parameters are characterized but not tested in manufacturing.

FIGURE 24-9: OC/PWM MODULE TIMING CHARACTERISTICS

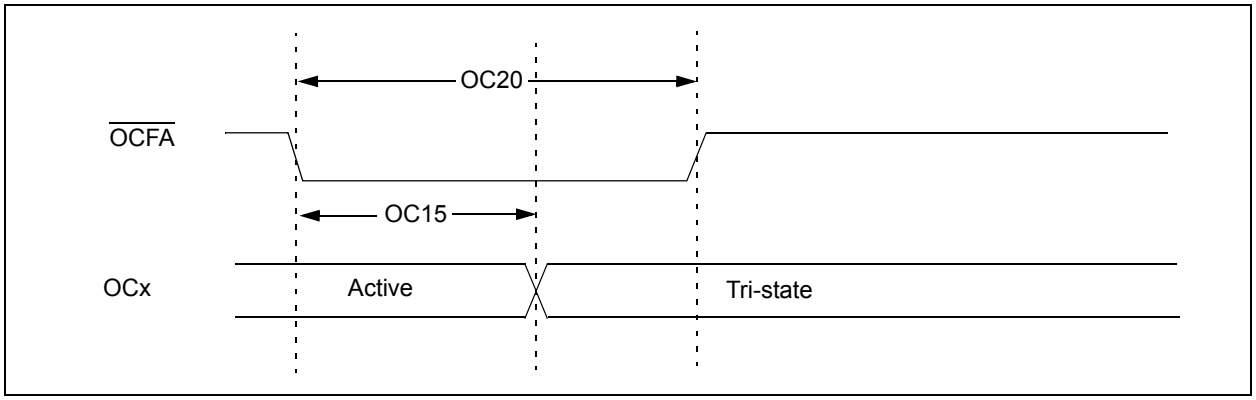

TABLE 24-28: SIMPLE OC/PWM MODE TIMING REQUIREMENTS

AC CHARACTERISTICS			Standard Operating Conditions: 3.0V to 3.6V (unless otherwise stated) Operating temperature -40°C ≤TA ≤+85°C for Industrial -40°C ≤TA ≤+125°C for Extended				
Param No.	**Symbol**	**Characteristic(1)**	**Min**	**Typ**	**Max**	**Units**	**Conditions**
OC15	TFD	Fault Input to PWM I/O Change	—	—	TCY + 20	ns	—
OC20	TFLT	Fault Input Pulse-Width	TCY + 20	—	—	ns	—

Note 1: These parameters are characterized but not tested in manufacturing.

© 2007-2012 Microchip Technology Inc.

FIGURE 24-10: MOTOR CONTROL PWM MODULE FAULT TIMING CHARACTERISTICS

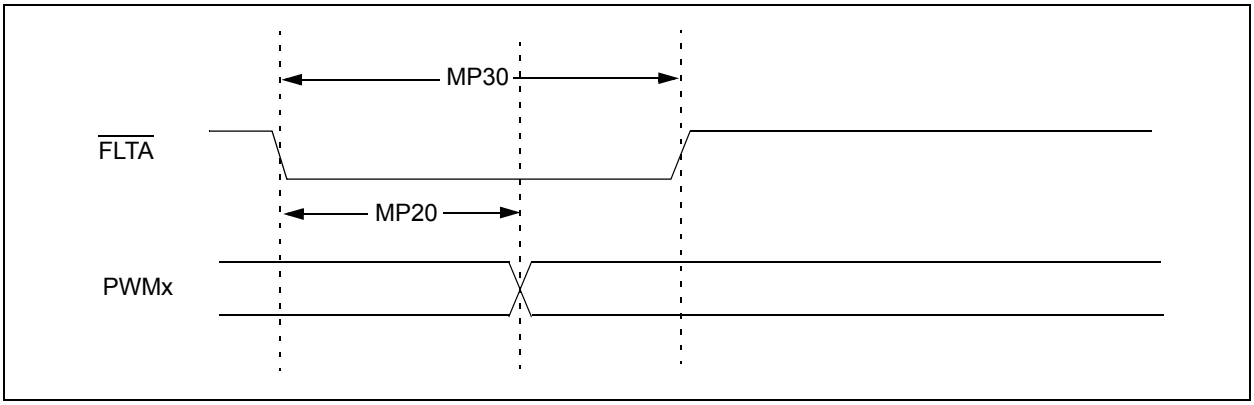

FIGURE 24-11: MOTOR CONTROL PWM MODULE TIMING CHARACTERISTICS

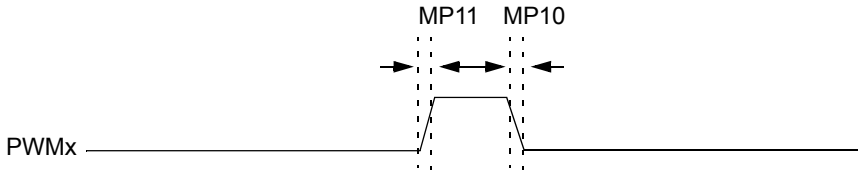

Note: Refer to Figure 24-1 for load conditions.

TABLE 24-29: MOTOR CONTROL PWM MODULE TIMING REQUIREMENTS

AC CHARACTERISTICS			Standard Operating Conditions: 3.0V to 3.6V (unless otherwise stated) Operating temperature -40°C ≤TA ≤+85°C for Industrial -40°C ≤TA ≤+125°C for Extended				
Param No.	**Symbol**	**Characteristic(1)**	**Min**	**Typ**	**Max**	**Units**	**Conditions**
MP10	TFPWM	PWM Output Fall Time	—	—	—	ns	See parameter D032
MP11	TRPWM	PWM Output Rise Time	—	—	—	ns	See parameter D031
MP20	TFD	Fault Input ↓to PWM I/O Change	—	—	50	ns	—
MP30	TFH	Minimum Pulse-Width	50	—	—	ns	—

Note 1: These parameters are characterized but not tested in manufacturing.

FIGURE 24-12: QEA/QEB INPUT CHARACTERISTICS

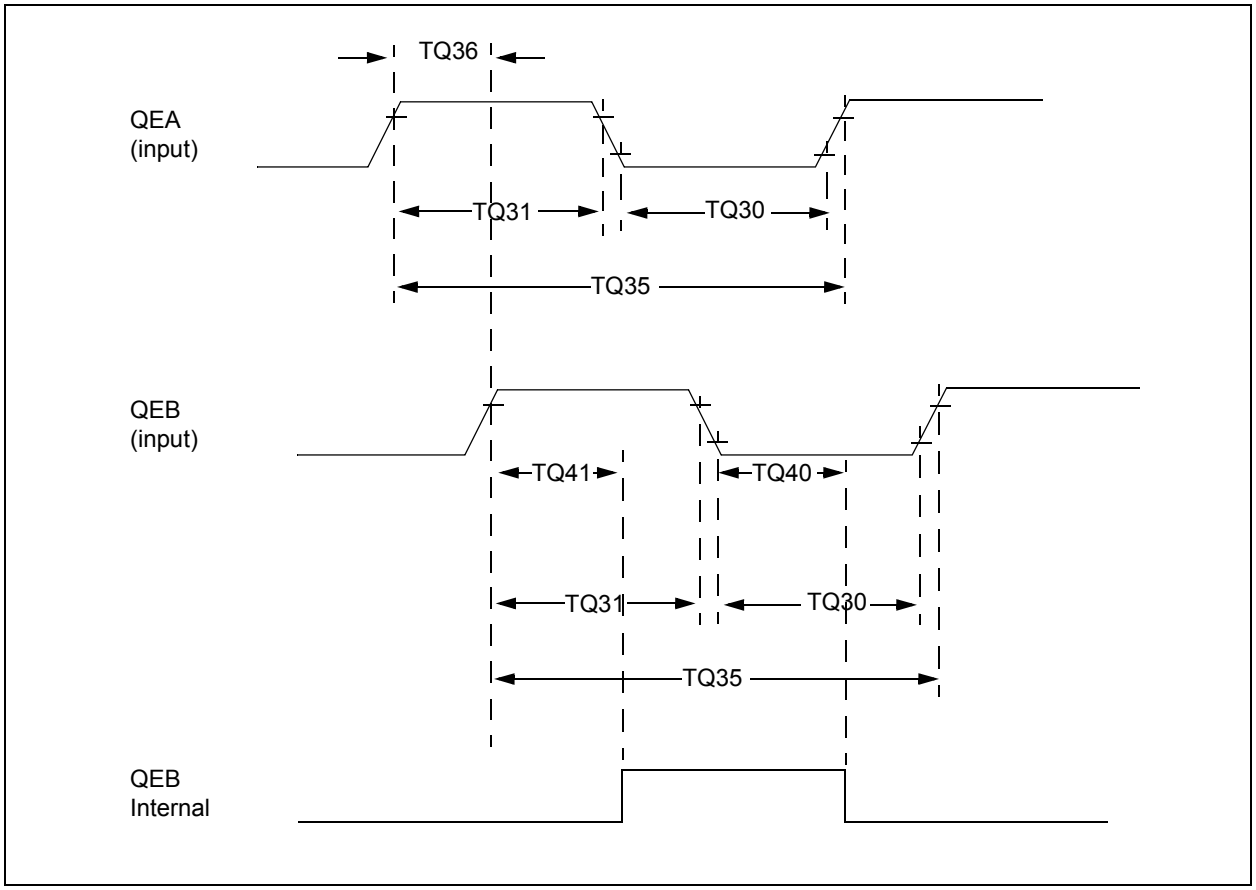

TABLE 24-30: QUADRATURE DECODER TIMING REQUIREMENTS

AC CHARACTERISTICS			Standard Operating Conditions: 3.0V to 3.6V (unless otherwise stated) Operating temperature -40°C ≤TA ≤+85°C for Industrial -40°C ≤TA ≤+125°C for Extended			
Param No.	**Symbol**	**Characteristic(1)**	**Typ(2)**	**Max**	**Units**	**Conditions**
TQ30	TQUL	Quadrature Input Low Time	6 TCY	—	ns	—
TQ31	TQUH	Quadrature Input High Time	6 TCY	—	ns	—
TQ35	TQUIN	Quadrature Input Period	12 TCY	—	ns	—
TQ36	TQUP	Quadrature Phase Period	3 TCY	—	ns	—
TQ40	TQUFL	Filter Time to Recognize Low, with Digital Filter	3 * N * TCY	—	ns	N = 1, 2, 4, 16, 32, 64, 128 and 256 **(Note 3)**
TQ41	TQUFH	Filter Time to Recognize High, with Digital Filter	3 * N * TCY	—	ns	N = 1, 2, 4, 16, 32, 64, 128 and 256 **(Note 3)**

Note 1: These parameters are characterized but not tested in manufacturing.

2: Data in "Typ" column is at 3.3V, 25°C unless otherwise stated. Parameters are for design guidance only and are not tested.

3: N = Index Channel Digital Filter Clock Divide Select bits. Refer to **Section 15. "Quadrature Encoder Interface (QEI)"** (DS70208) in the "*dsPIC33F/PIC24H Family Reference Manual*". Please see the Microchip web site for the latest dsPIC33F/PIC24H Family Reference Manual sections.

© 2007-2012 Microchip Technology Inc.

FIGURE 24-13: QEI MODULE INDEX PULSE TIMING CHARACTERISTICS

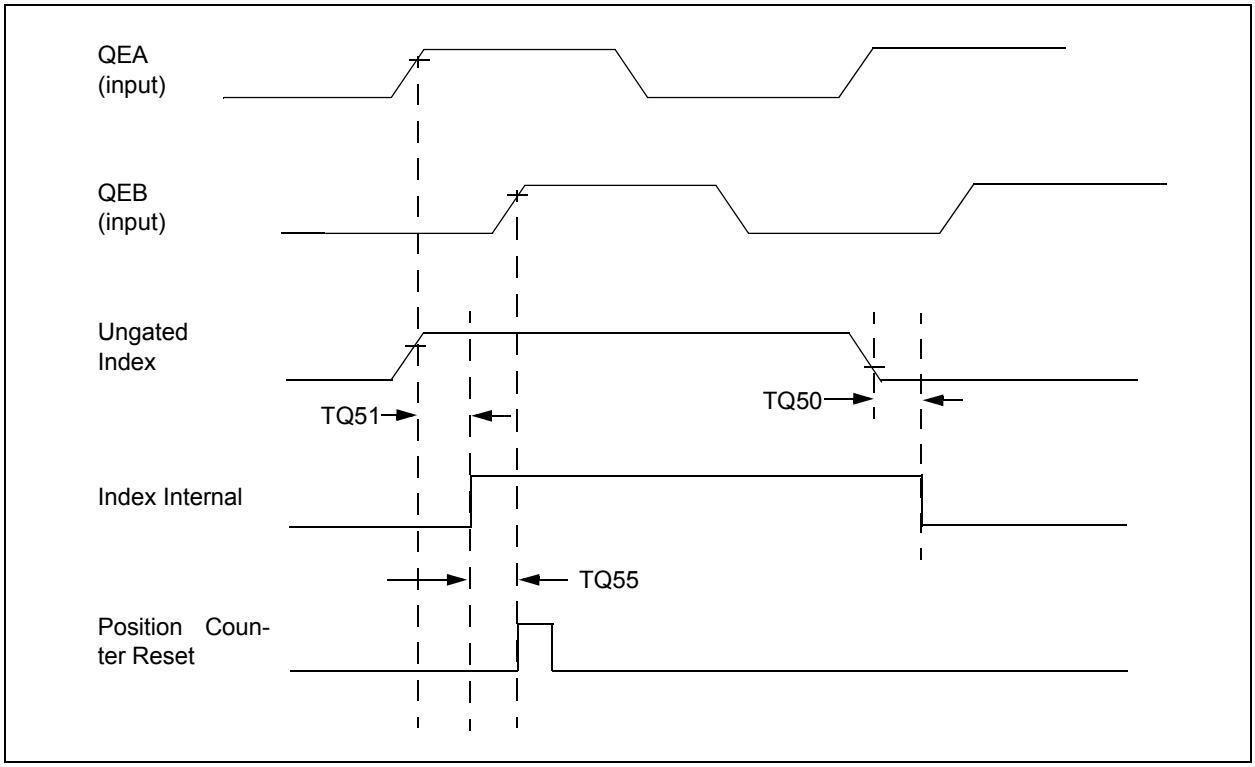

TABLE 24-31: QEI INDEX PULSE TIMING REQUIREMENTS

AC CHARACTERISTICS			Standard Operating Conditions: 3.0V to 3.6V (unless otherwise stated) Operating temperature -40°C ≤TA ≤+85°C for Industrial -40°C ≤TA ≤+125°C for Extended			
Param No.	**Symbol**	**Characteristic(1)**	**Min**	**Max**	**Units**	**Conditions**
TQ50	TqIL	Filter Time to Recognize Low, with Digital Filter	3 * N * TCY	—	ns	N = 1, 2, 4, 16, 32, 64, 128 and 256 **(Note 2)**
TQ51	TqiH	Filter Time to Recognize High, with Digital Filter	3 * N * TCY	—	ns	N = 1, 2, 4, 16, 32, 64, 128 and 256 **(Note 2)**
TQ55	Tqidxr	Index Pulse Recognized to Position Counter Reset (ungated index)	3 TCY	—	ns	—

Note 1: These parameters are characterized but not tested in manufacturing.

2: Alignment of index pulses to QEA and QEB is shown for position counter Reset timing only. Shown for forward direction only (QEA leads QEB). Same timing applies for reverse direction (QEA lags QEB) but index pulse recognition occurs on falling edge.

TABLE 24-32: SPIx MAXIMUM DATA/CLOCK RATE SUMMARY

AC CHARACTERISTICS			Standard Operating Conditions: 3.0V to 3.6V (unless otherwise stated) Operating temperature -40°C ≤TA ≤+85°C for Industrial -40°C ≤TA ≤+125°C for Extended			
Maximum Data Rate	**Master Transmit Only (Half-Duplex)**	**Master Transmit/Receive (Full-Duplex)**	**Slave Transmit/Receive (Full-Duplex)**	**CKE**	**CKP**	**SMP**
15 MHz	Table 24-33	—	—	0,1	0,1	0,1
9 MHz	—	Table 24-34	—	1	0,1	1
9 MHz	—	Table 24-35	—	0	0,1	1
15 MHz	—	—	Table 24-36	1	0	0
11 MHz	—	—	Table 24-37	1	1	0
15 MHz	—	—	Table 24-38	0	1	0
11 MHz	—	—	Table 24-39	0	0	0

FIGURE 24-14: SPIx MASTER MODE (HALF-DUPLEX, TRANSMIT ONLY CKE = 0) TIMING CHARACTERISTICS

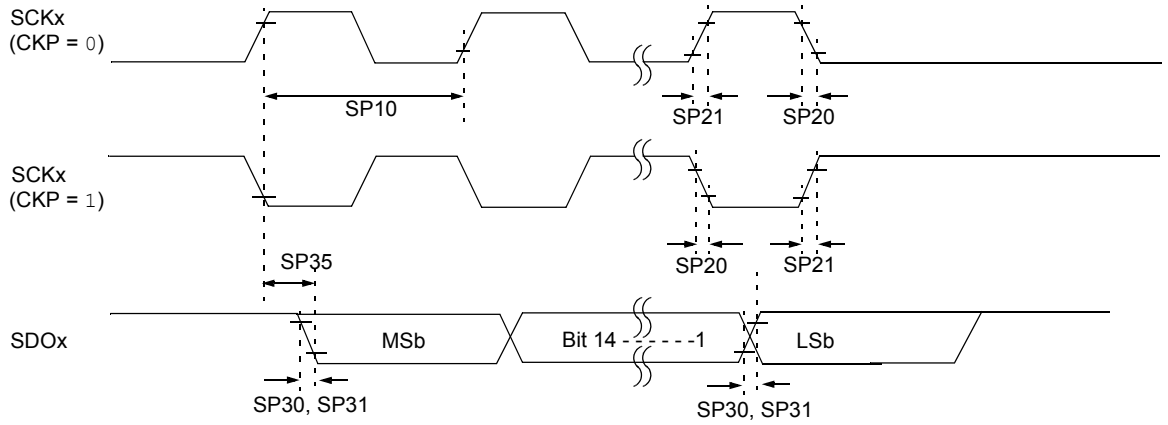

Note: Refer to Figure 24-1 for load conditions.

© 2007-2012 Microchip Technology Inc.

FIGURE 24-15: SPIx MASTER MODE (HALF-DUPLEX, TRANSMIT ONLY CKE = 1) TIMING CHARACTERISTICS

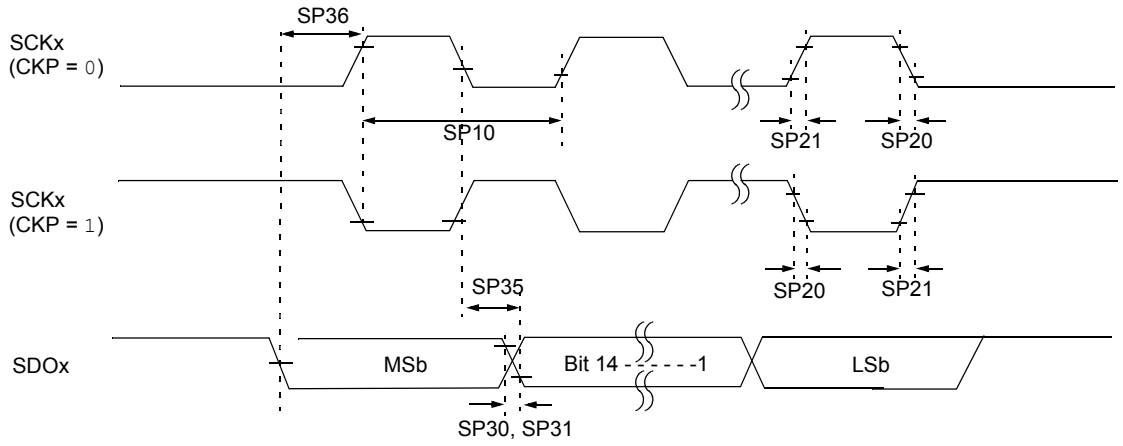

Note: Refer to Figure 24-1 for load conditions.

TABLE 24-33: SPIx MASTER MODE (HALF-DUPLEX, TRANSMIT ONLY) TIMING REQUIREMENTS

AC CHARACTERISTICS			Standard Operating Conditions: 3.0V to 3.6V (unless otherwise stated) Operating temperature -40°C ≤TA ≤+85°C for Industrial -40°C ≤TA ≤+125°C for Extended				
Param No.	**Symbol**	**Characteristic(1)**	**Min**	**Typ(2)**	**Max**	**Units**	**Conditions**
SP10	TscP	Maximum SCK Frequency	—	—	15	MHz	See **Note 3**
SP20	TscF	SCKx Output Fall Time	—	—	—	ns	See parameter DO32 and **Note 4**
SP21	TscR	SCKx Output Rise Time	—	—	—	ns	See parameter DO31 and **Note 4**
SP30	TdoF	SDOx Data Output Fall Time	—	—	—	ns	See parameter DO32 and **Note 4**
SP31	TdoR	SDOx Data Output Rise Time	—	—	—	ns	See parameter DO31 and **Note 4**
SP35	TscH2doV, TscL2doV	SDOx Data Output Valid after SCKx Edge	—	6	20	ns	—
SP36	TdiV2scH, TdiV2scL	SDOx Data Output Setup to First SCKx Edge	30	—	—	ns	—

Note 1: These parameters are characterized, but are not tested in manufacturing.

2: Data in “Typ” column is at 3.3V, 25°C unless otherwise stated.

3: The minimum clock period for SCKx is 66.7 ns. Therefore, the clock generated in Master mode must not violate this specification.

4: Assumes 50 pF load on all SPIx pins.

FIGURE 24-16: SPIx MASTER MODE (FULL-DUPLEX, CKE = 1, CKP = x, SMP = 1) TIMING CHARACTERISTICS

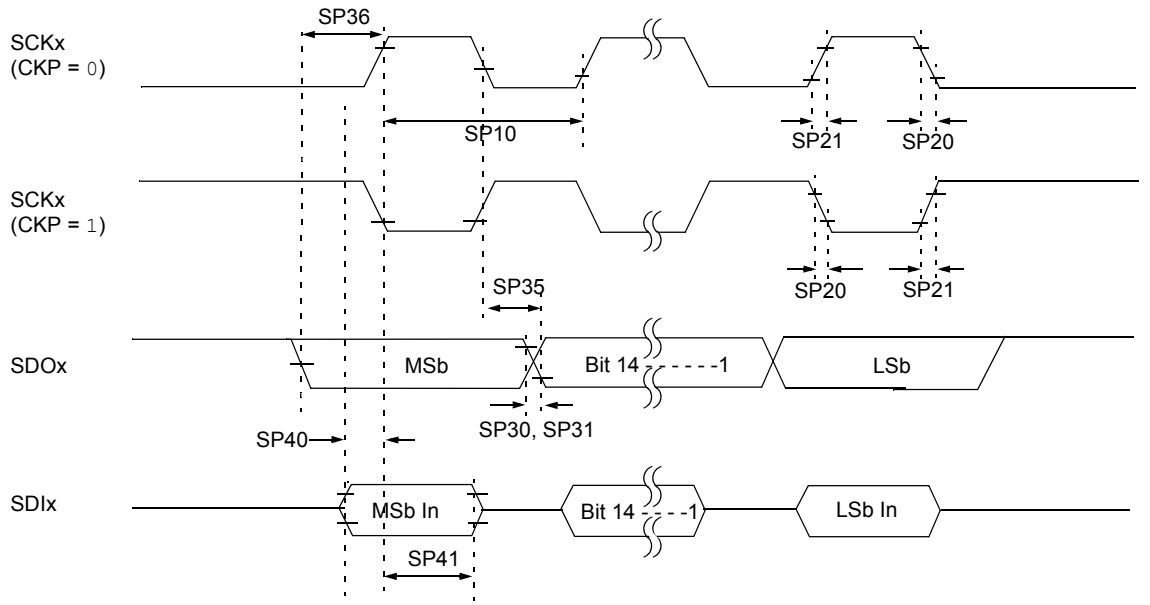

Note: Refer to Figure 24-1 for load conditions.

TABLE 24-34: SPIx MASTER MODE (FULL-DUPLEX, CKE = 1, CKP = x, SMP = 1) TIMING REQUIREMENTS

AC CHARACTERISTICS			Standard Operating Conditions: 3.0V to 3.6V (unless otherwise stated) Operating temperature -40°C ≤TA ≤+85°C for Industrial -40°C ≤TA ≤+125°C for Extended				
Param No.	**Symbol**	**Characteristic(1)**	**Min**	**Typ(2)**	**Max**	**Units**	**Conditions**
SP10	TscP	Maximum SCK Frequency	—	—	9	MHz	See **Note 3**
SP20	TscF	SCKx Output Fall Time	—	—	—	ns	See parameter DO32 and **Note 4**
SP21	TscR	SCKx Output Rise Time	—	—	—	ns	See parameter DO31 and **Note 4**
SP30	TdoF	SDOx Data Output Fall Time	—	—	—	ns	See parameter DO32 and **Note 4**
SP31	TdoR	SDOx Data Output Rise Time	—	—	—	ns	See parameter DO31 and **Note 4**
SP35	TscH2doV, TscL2doV	SDOx Data Output Valid after SCKx Edge	—	6	20	ns	—
SP36	TdoV2sc, TdoV2scL	SDOx Data Output Setup to First SCKx Edge	30	—	—	ns	—
SP40	TdiV2scH, TdiV2scL	Setup Time of SDIx Data Input to SCKx Edge	30	—	—	ns	—
SP41	TscH2diL, TscL2diL	Hold Time of SDIx Data Input to SCKx Edge	30	—	—	ns	—

Note 1: These parameters are characterized, but are not tested in manufacturing.

2: Data in "Typ" column is at 3.3V, 25°C unless otherwise stated.

3: The minimum clock period for SCKx is 111 ns. The clock generated in Master mode must not violate this specification.

4: Assumes 50 pF load on all SPIx pins.

© 2007-2012 Microchip Technology Inc.

FIGURE 24-17: SPIx MASTER MODE (FULL-DUPLEX, CKE = 0, CKP = x, SMP = 1) TIMING CHARACTERISTICS

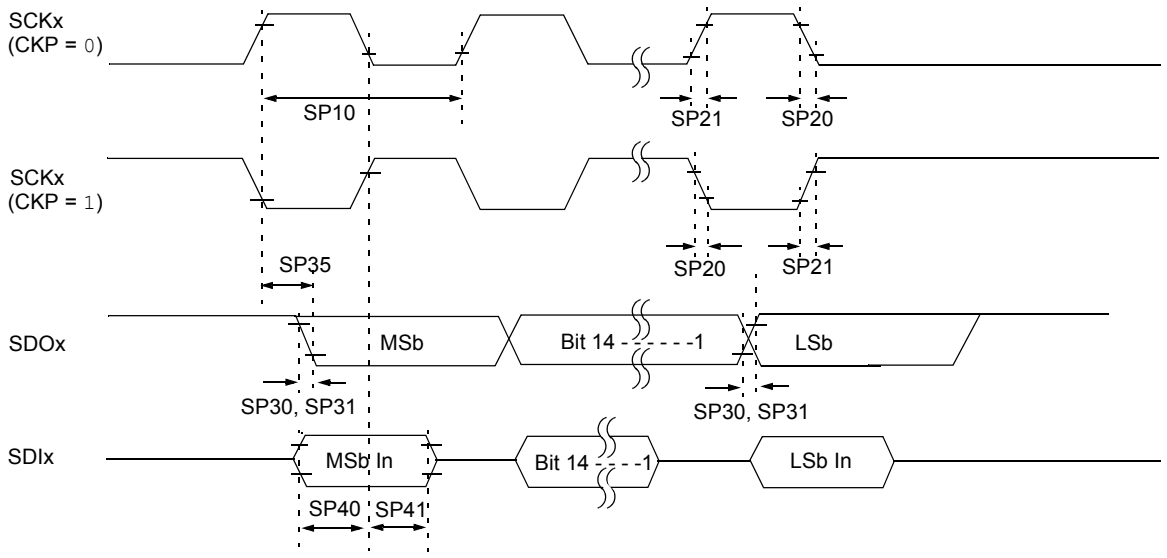

Note: Refer to Figure 24-1 for load conditions.

TABLE 24-35: SPIx MASTER MODE (FULL-DUPLEX, CKE = 0, CKP = x, SMP = 1) TIMING REQUIREMENTS

AC CHARACTERISTICS			Standard Operating Conditions: 3.0V to 3.6V (unless otherwise stated) Operating temperature -40°C ≤TA ≤+85°C for Industrial -40°C ≤TA ≤+125°C for Extended				
Param No.	**Symbol**	**Characteristic(1)**	**Min**	**Typ(2)**	**Max**	**Units**	**Conditions**
SP10	TscP	Maximum SCK Frequency	—	—	9	MHz	-40ºC to +125ºC and see **Note 3**
SP20	TscF	SCKx Output Fall Time	—	—	—	ns	See parameter DO32 and **Note 4**
SP21	TscR	SCKx Output Rise Time	—	—	—	ns	See parameter DO31 and **Note 4**
SP30	TdoF	SDOx Data Output Fall Time	—	—	—	ns	See parameter DO32 and **Note 4**
SP31	TdoR	SDOx Data Output Rise Time	—	—	—	ns	See parameter DO31 and **Note 4**
SP35	TscH2doV, TscL2doV	SDOx Data Output Valid after SCKx Edge	—	6	20	ns	—
SP36	TdoV2scH, TdoV2scL	SDOx Data Output Setup to First SCKx Edge	30	—	—	ns	—
SP40	TdiV2scH, TdiV2scL	Setup Time of SDIx Data Input to SCKx Edge	30	—	—	ns	—
SP41	TscH2diL, TscL2diL	Hold Time of SDIx Data Input to SCKx Edge	30	—	—	ns	—

Note 1: These parameters are characterized, but are not tested in manufacturing.

2: Data in "Typ" column is at 3.3V, 25°C unless otherwise stated.

3: The minimum clock period for SCKx is 111 ns. The clock generated in Master mode must not violate this specification.

4: Assumes 50 pF load on all SPIx pins.

FIGURE 24-18: SPIx SLAVE MODE (FULL-DUPLEX, CKE = 1, CKP = 0, SMP = 0) TIMING CHARACTERISTICS

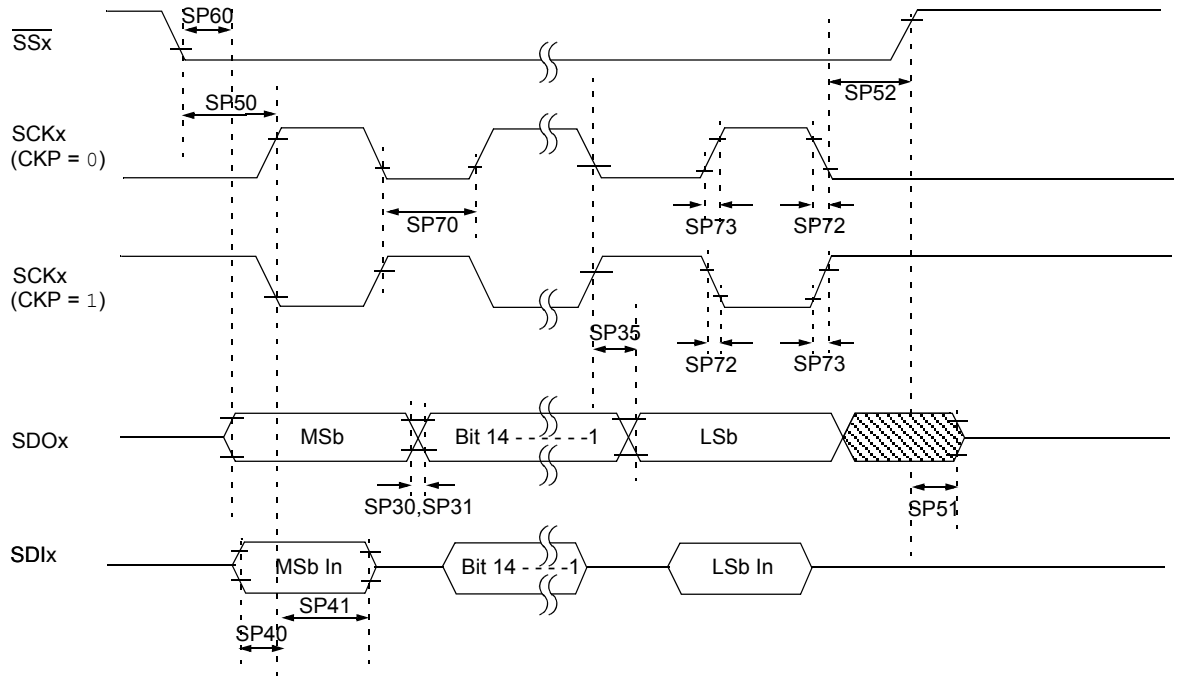

Note: Refer to Figure 24-1 for load conditions.

© 2007-2012 Microchip Technology Inc.

TABLE 24-36: SPIx SLAVE MODE (FULL-DUPLEX, CKE = 1, CKP = 0, SMP = 0) TIMING REQUIREMENTS

AC CHARACTERISTICS			Standard Operating Conditions: 3.0V to 3.6V (unless otherwise stated) Operating temperature -40°C ≤TA ≤+85°C for Industrial -40°C ≤TA ≤+125°C for Extended				
Param No.	**Symbol**	**Characteristic(1)**	**Min**	**Typ(2)**	**Max**	**Units**	**Conditions**
SP70	TscP	Maximum SCK Input Frequency	—	—	15	MHz	See **Note 3**
SP72	TscF	SCKx Input Fall Time	—	—	—	ns	See parameter DO32 and **Note 4**
SP73	TscR	SCKx Input Rise Time	—	—	—	ns	See parameter DO31 and **Note 4**
SP30	TdoF	SDOx Data Output Fall Time	—	—	—	ns	See parameter DO32 and **Note 4**
SP31	TdoR	SDOx Data Output Rise Time	—	—	—	ns	See parameter DO31 and **Note 4**
SP35	TscH2doV, TscL2doV	SDOx Data Output Valid after SCKx Edge	—	6	20	ns	—
SP36	TdoV2scH, TdoV2scL	SDOx Data Output Setup to First SCKx Edge	30	—	—	ns	—
SP40	TdiV2scH, TdiV2scL	Setup Time of SDIx Data Input to SCKx Edge	30	—	—	ns	—
SP41	TscH2diL, TscL2diL	Hold Time of SDIx Data Input to SCKx Edge	30	—	—	ns	—
SP50	TssL2scH, TssL2scL	$\overline{SSx}$ ↓to SCKx ↑ or SCKx Input	120	—	—	ns	—
SP51	TssH2doZ	$\overline{SSx}$ ↑ to SDOx Output High-Impedance(4)	10	—	50	ns	—
SP52	TscH2ssH TscL2ssH	$\overline{SSx}$ after SCKx Edge	1.5 TCY + 40	—	—	ns	See **Note 4**
SP60	TssL2doV	SDOx Data Output Valid after $\overline{SSx}$ Edge	—	—	50	ns	—

Note 1: These parameters are characterized, but are not tested in manufacturing.

2: Data in "Typ" column is at 3.3V, 25°C unless otherwise stated.

3: The minimum clock period for SCKx is 66.7 ns. Therefore, the SCK clock generated by the Master must not violate this specification.

4: Assumes 50 pF load on all SPIx pins.

FIGURE 24-19: SPIx SLAVE MODE (FULL-DUPLEX, CKE = 1, CKP = 1, SMP = 0) TIMING CHARACTERISTICS

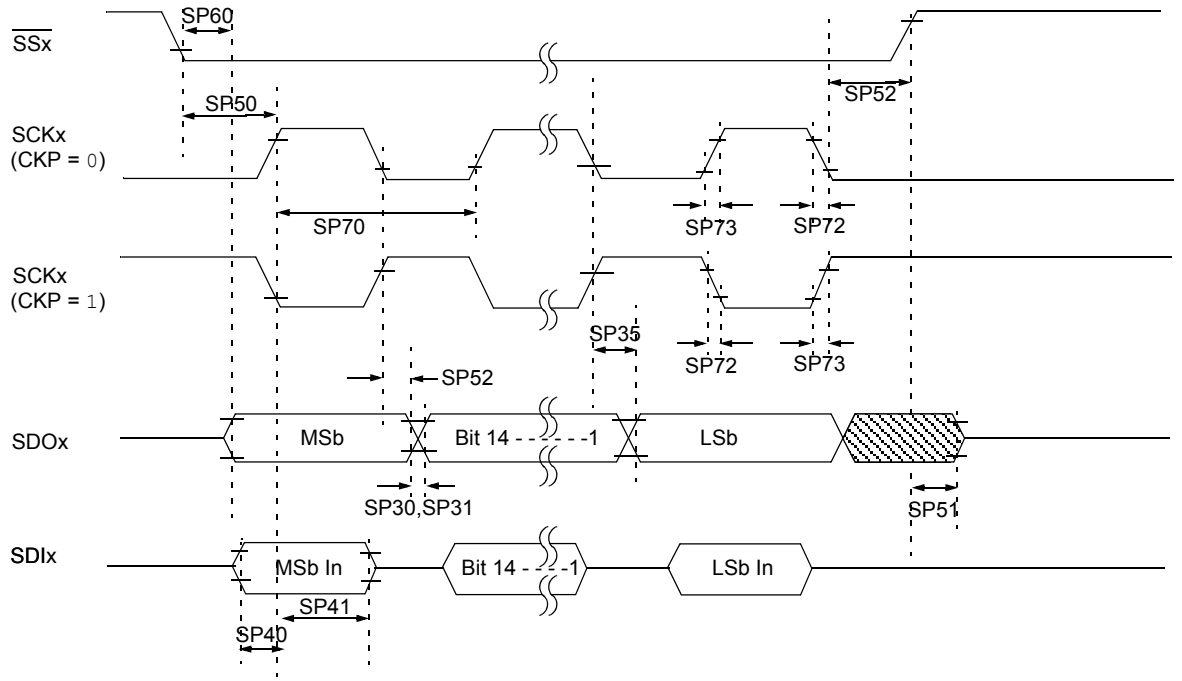

Note: Refer to Figure 24-1 for load conditions.

© 2007-2012 Microchip Technology Inc.

TABLE 24-37: SPIx SLAVE MODE (FULL-DUPLEX, CKE = 1, CKP = 1, SMP = 0) TIMING REQUIREMENTS

AC CHARACTERISTICS			Standard Operating Conditions: 3.0V to 3.6V (unless otherwise stated) Operating temperature -40°C ≤TA ≤+85°C for Industrial -40°C ≤TA ≤+125°C for Extended				
Param No.	**Symbol**	**Characteristic(1)**	**Min**	**Typ(2)**	**Max**	**Units**	**Conditions**
SP70	TscP	Maximum SCK Input Frequency	—	—	11	MHz	See **Note 3**
SP72	TscF	SCKx Input Fall Time	—	—	—	ns	See parameter DO32 and **Note 4**
SP73	TscR	SCKx Input Rise Time	—	—	—	ns	See parameter DO31 and **Note 4**
SP30	TdoF	SDOx Data Output Fall Time	—	—	—	ns	See parameter DO32 and **Note 4**
SP31	TdoR	SDOx Data Output Rise Time	—	—	—	ns	See parameter DO31 and **Note 4**
SP35	TscH2doV, TscL2doV	SDOx Data Output Valid after SCKx Edge	—	6	20	ns	—
SP36	TdoV2scH, TdoV2scL	SDOx Data Output Setup to First SCKx Edge	30	—	—	ns	—
SP40	TdiV2scH, TdiV2scL	Setup Time of SDIx Data Input to SCKx Edge	30	—	—	ns	—
SP41	TscH2diL, TscL2diL	Hold Time of SDIx Data Input to SCKx Edge	30	—	—	ns	—
SP50	TssL2scH, TssL2scL	$\overline{SSx}$ ↓to SCKx ↑ or SCKx Input	120	—	—	ns	—
SP51	TssH2doZ	$\overline{SSx}$ ↑ to SDOx Output High-Impedance(4)	10	—	50	ns	—
SP52	TscH2ssH TscL2ssH	$\overline{SSx}$ after SCKx Edge	1.5 TCY + 40	—	—	ns	See **Note 4**
SP60	TssL2doV	SDOx Data Output Valid after $\overline{SSx}$ Edge	—	—	50	ns	—

Note 1: These parameters are characterized, but are not tested in manufacturing.

2: Data in "Typ" column is at 3.3V, 25°C unless otherwise stated.

3: The minimum clock period for SCKx is 91 ns. Therefore, the SCK clock generated by the Master must not violate this specification.

4: Assumes 50 pF load on all SPIx pins.

FIGURE 24-20: SPIx SLAVE MODE (FULL-DUPLEX CKE = 0, CKP = 1, SMP = 0) TIMING CHARACTERISTICS

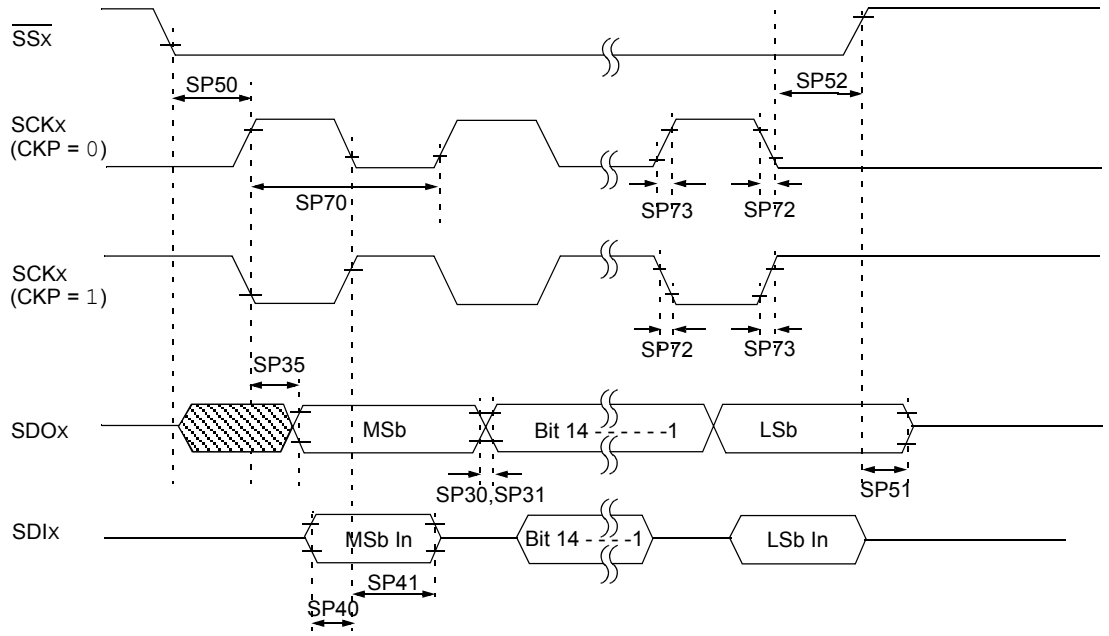

Note: Refer to Figure 24-1 for load conditions.

© 2007-2012 Microchip Technology Inc.

TABLE 24-38: SPIx SLAVE MODE (FULL-DUPLEX, CKE = 0, CKP = 1, SMP = 0) TIMING REQUIREMENTS

AC CHARACTERISTICS			Standard Operating Conditions: 3.0V to 3.6V (unless otherwise stated) Operating temperature -40°C ≤TA ≤+85°C for Industrial -40°C ≤TA ≤+125°C for Extended				
Param No.	**Symbol**	**Characteristic(1)**	**Min**	**Typ(2)**	**Max**	**Units**	**Conditions**
SP70	TscP	Maximum SCK Input Frequency	—	—	15	MHz	See **Note 3**
SP72	TscF	SCKx Input Fall Time	—	—	—	ns	See parameter DO32 and **Note 4**
SP73	TscR	SCKx Input Rise Time	—	—	—	ns	See parameter DO31 and **Note 4**
SP30	TdoF	SDOx Data Output Fall Time	—	—	—	ns	See parameter DO32 and **Note 4**
SP31	TdoR	SDOx Data Output Rise Time	—	—	—	ns	See parameter DO31 and **Note 4**
SP35	TscH2doV, TscL2doV	SDOx Data Output Valid after SCKx Edge	—	6	20	ns	—
SP36	TdoV2scH, TdoV2scL	SDOx Data Output Setup to First SCKx Edge	30	—	—	ns	—
SP40	TdiV2scH, TdiV2scL	Setup Time of SDIx Data Input to SCKx Edge	30	—	—	ns	—
SP41	TscH2diL, TscL2diL	Hold Time of SDIx Data Input to SCKx Edge	30	—	—	ns	—
SP50	TssL2scH, TssL2scL	$\overline{SSx}$ ↓to SCKx ↑ or SCKx Input	120	—	—	ns	—
SP51	TssH2doZ	$\overline{SSx}$ ↑ to SDOx Output High-Impedance(4)	10	—	50	ns	—
SP52	TscH2ssH TscL2ssH	$\overline{SSx}$ after SCKx Edge	1.5 TCY + 40	—	—	ns	See **Note 4**

Note 1: These parameters are characterized, but are not tested in manufacturing.

2: Data in "Typ" column is at 3.3V, 25°C unless otherwise stated.

3: The minimum clock period for SCKx is 66.7 ns. Therefore, the SCK clock generated by the Master must not violate this specification.

4: Assumes 50 pF load on all SPIx pins.

FIGURE 24-21: SPIx SLAVE MODE (FULL-DUPLEX, CKE = 0, CKP = 0, SMP = 0) TIMING CHARACTERISTICS

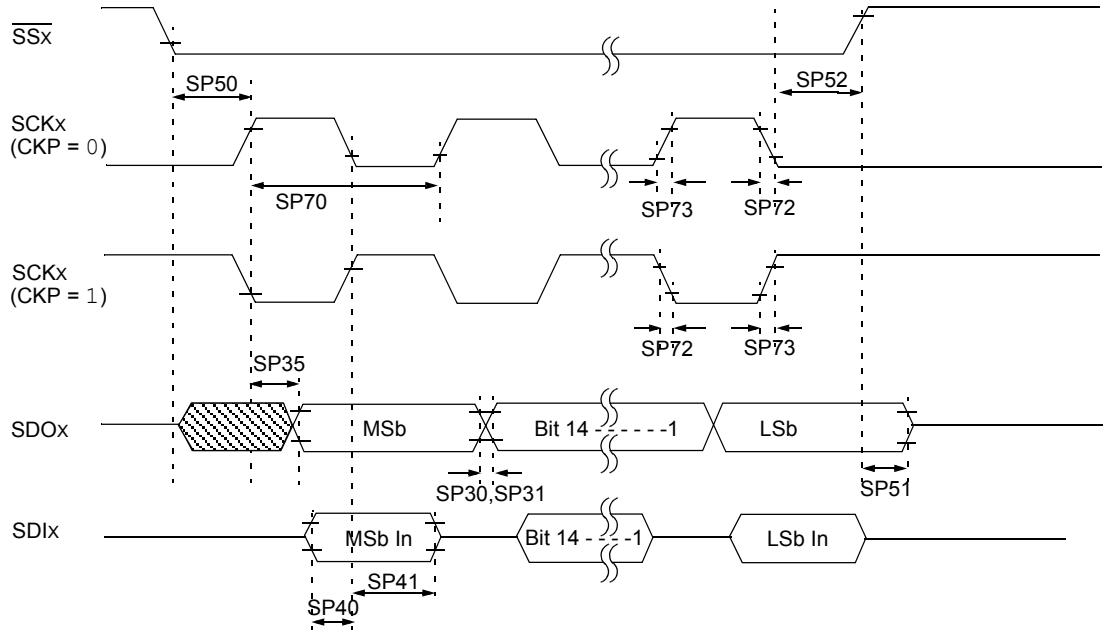

Note: Refer to Figure 24-1 for load conditions.

© 2007-2012 Microchip Technology Inc.

TABLE 24-39: SPIx SLAVE MODE (FULL-DUPLEX, CKE = 0, CKP = 0, SMP = 0) TIMING REQUIREMENTS

AC CHARACTERISTICS			Standard Operating Conditions: 3.0V to 3.6V (unless otherwise stated) Operating temperature -40°C ≤TA ≤+85°C for Industrial -40°C ≤TA ≤+125°C for Extended				
Param No.	**Symbol**	**Characteristic(1)**	**Min**	**Typ(2)**	**Max**	**Units**	**Conditions**
SP70	TscP	Maximum SCK Input Frequency	—	—	11	MHz	See **Note 3**
SP72	TscF	SCKx Input Fall Time	—	—	—	ns	See parameter DO32 and **Note 4**
SP73	TscR	SCKx Input Rise Time	—	—	—	ns	See parameter DO31 and **Note 4**
SP30	TdoF	SDOx Data Output Fall Time	—	—	—	ns	See parameter DO32 and **Note 4**
SP31	TdoR	SDOx Data Output Rise Time	—	—	—	ns	See parameter DO31 and **Note 4**
SP35	TscH2doV, TscL2doV	SDOx Data Output Valid after SCKx Edge	—	6	20	ns	—
SP36	TdoV2scH, TdoV2scL	SDOx Data Output Setup to First SCKx Edge	30	—	—	ns	—
SP40	TdiV2scH, TdiV2scL	Setup Time of SDIx Data Input to SCKx Edge	30	—	—	ns	—
SP41	TscH2diL, TscL2diL	Hold Time of SDIx Data Input to SCKx Edge	30	—	—	ns	—
SP50	TssL2scH, TssL2scL	$\overline{SSx}$ ↓to SCKx ↑ or SCKx Input	120	—	—	ns	—
SP51	TssH2doZ	$\overline{SSx}$ ↑ to SDOx Output High-Impedance(4)	10	—	50	ns	—
SP52	TscH2ssH TscL2ssH	$\overline{SSx}$ after SCKx Edge	1.5 TCY + 40	—	—	ns	See **Note 4**

Note 1: These parameters are characterized, but are not tested in manufacturing.

2: Data in “Typ” column is at 3.3V, 25°C unless otherwise stated.

3: The minimum clock period for SCKx is 91 ns. Therefore, the SCK clock generated by the Master must not violate this specification.

4: Assumes 50 pF load on all SPIx pins.

FIGURE 24-22: I2Cx BUS START/STOP BITS TIMING CHARACTERISTICS (MASTER MODE)

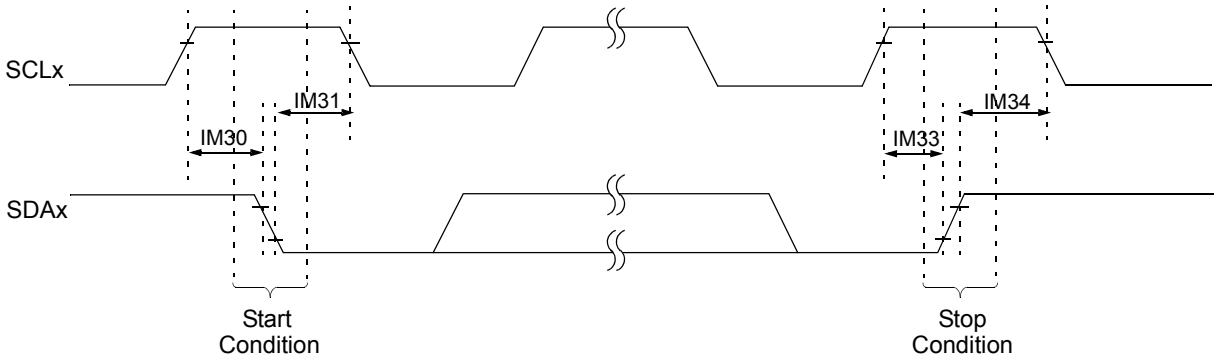

Note: Refer to Figure 24-1 for load conditions.

FIGURE 24-23: I2Cx BUS DATA TIMING CHARACTERISTICS (MASTER MODE)

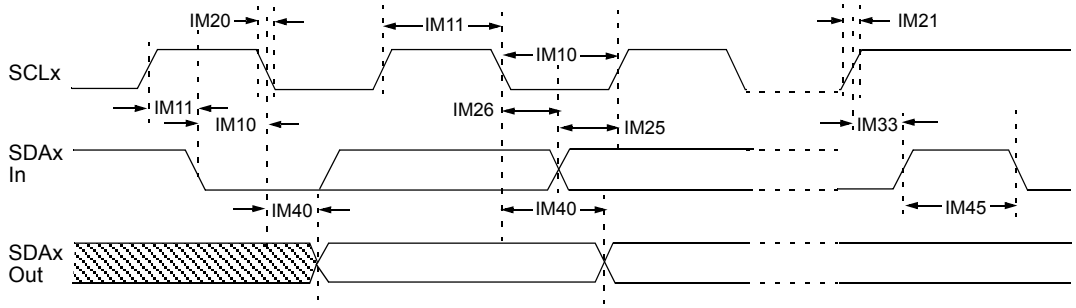

Note: Refer to Figure 24-1 for load conditions.

© 2007-2012 Microchip Technology Inc.

TABLE 24-40: I2Cx BUS DATA TIMING REQUIREMENTS (MASTER MODE)

AC CHARACTERISTICS				Standard Operating Conditions: 3.0V to 3.6V (unless otherwise stated) Operating temperature -40°C ≤TA ≤+85°C for Industrial -40°C ≤TA ≤+125°C for Extended			
Param No.	**Symbol**	**Characteristic(3)**		**Min(1)**	**Max**	**Units**	**Conditions**
IM10	TLO:SCL	Clock Low Time	100 kHz mode	TCY/2 (BRG + 1)	—	µs	—
			400 kHz mode	TCY/2 (BRG + 1)	—	µs	—
			1 MHz mode(2)	TCY/2 (BRG + 1)	—	µs	—
IM11	THI:SCL	Clock High Time	100 kHz mode	TCY/2 (BRG + 1)	—	µs	—
			400 kHz mode	TCY/2 (BRG + 1)	—	µs	—
			1 MHz mode(2)	TCY/2 (BRG + 1)	—	µs	—
IM20	TF:SCL	SDAx and SCLx Fall Time	100 kHz mode	—	300	ns	CB is specified to be from 10 to 400 pF
			400 kHz mode	20 + 0.1 CB	300	ns	
			1 MHz mode(2)	—	100	ns	
IM21	TR:SCL	SDAx and SCLx Rise Time	100 kHz mode	—	1000	ns	CB is specified to be from 10 to 400 pF
			400 kHz mode	20 + 0.1 CB	300	ns	
			1 MHz mode(2)	—	300	ns	
IM25	TSU:DAT	Data Input Setup Time	100 kHz mode	250	—	ns	—
			400 kHz mode	100	—	ns	
			1 MHz mode(2)	40	—	ns	
IM26	THD:DAT	Data Input Hold Time	100 kHz mode	0	—	µs	—
			400 kHz mode	0	0.9	µs	
			1 MHz mode(2)	0.2	—	µs	
IM30	TSU:STA	Start Condition Setup Time	100 kHz mode	TCY/2 (BRG + 1)	—	µs	Only relevant for Repeated Start condition
			400 kHz mode	TCY/2 (BRG + 1)	—	µs	
			1 MHz mode(2)	TCY/2 (BRG + 1)	—	µs	
IM31	THD:STA	Start Condition Hold Time	100 kHz mode	TCY/2 (BRG + 1)	—	µs	After this period the first clock pulse is generated
			400 kHz mode	TCY/2 (BRG + 1)	—	µs	
			1 MHz mode(2)	TCY/2 (BRG + 1)	—	µs	
IM33	TSU:STO	Stop Condition Setup Time	100 kHz mode	TCY/2 (BRG + 1)	—	µs	—
			400 kHz mode	TCY/2 (BRG + 1)	—	µs	
			1 MHz mode(2)	TCY/2 (BRG + 1)	—	µs	
IM34	THD:STO	Stop Condition Hold Time	100 kHz mode	TCY/2 (BRG + 1)	—	ns	—
			400 kHz mode	TCY/2 (BRG + 1)	—	ns	
			1 MHz mode(2)	TCY/2 (BRG + 1)	—	ns	
IM40	TAA:SCL	Output Valid From Clock	100 kHz mode	—	3500	ns	—
			400 kHz mode	—	1000	ns	—
			1 MHz mode(2)	—	400	ns	—
IM45	TBF:SDA	Bus Free Time	100 kHz mode	4.7	—	µs	Time the bus must be free before a new transmission can start
			400 kHz mode	1.3	—	µs	
			1 MHz mode(2)	0.5	—	µs	
IM50	CB	Bus Capacitive Loading		—	400	pF	—
IM51	TPGD	Pulse Gobbler Delay		65	390	ns	See **Note 4**

Note 1: BRG is the value of the I^2C Baud Rate Generator. Refer to **Section 19. "Inter-Integrated Circuit (I^2C™)"** (DS70195) in the "*dsPIC33F/PIC24H Family Reference Manual*". Please see the Microchip web site for the latest dsPIC33F/PIC24H Family Reference Manual sections.

2: Maximum pin capacitance = 10 pF for all I2Cx pins (for 1 MHz mode only).

3: These parameters are characterized by similarity, but are not tested in manufacturing.

4: Typical value for this parameter is 130 ns.

FIGURE 24-24: I2Cx BUS START/STOP BITS TIMING CHARACTERISTICS (SLAVE MODE)

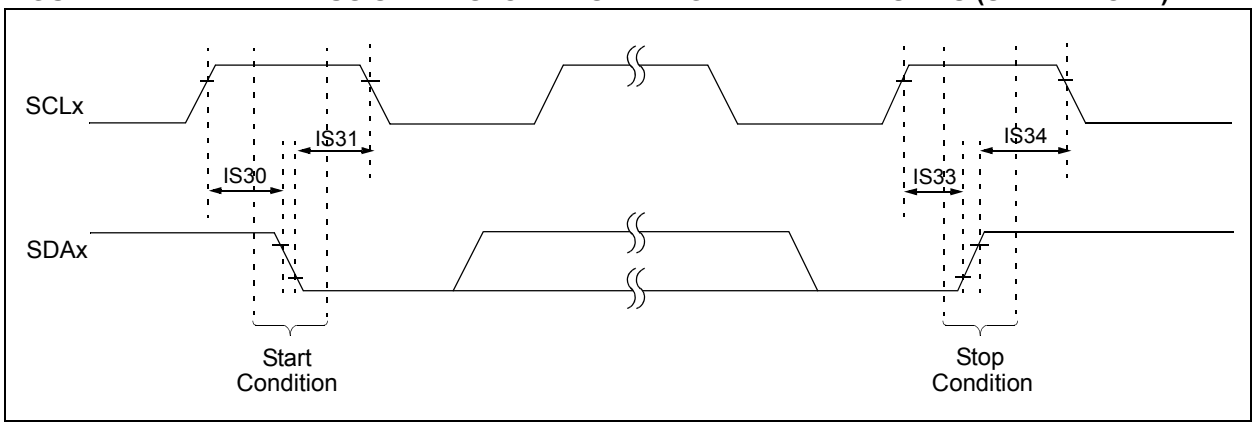

FIGURE 24-25: I2Cx BUS DATA TIMING CHARACTERISTICS (SLAVE MODE)

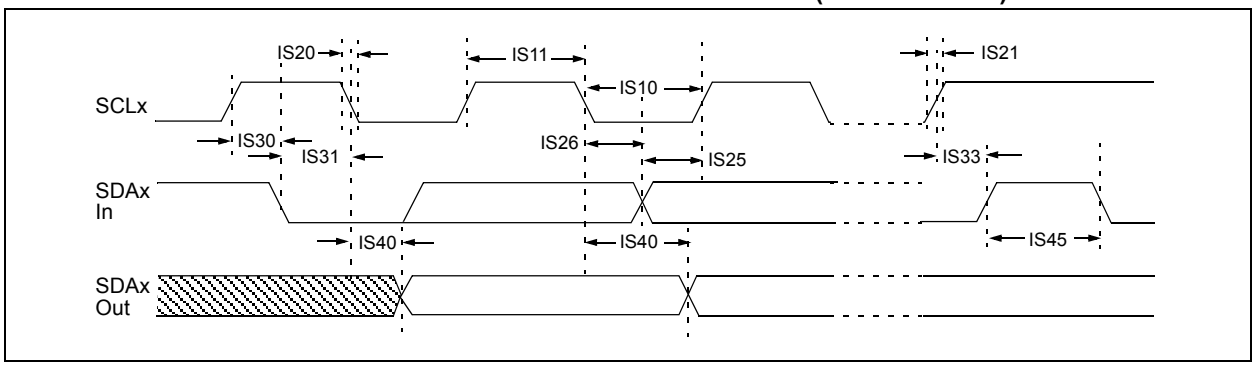

© 2007-2012 Microchip Technology Inc.

TABLE 24-41: I2Cx BUS DATA TIMING REQUIREMENTS (SLAVE MODE)

AC CHARACTERISTICS				Standard Operating Conditions: 3.0V to 3.6V (unless otherwise stated) Operating temperature -40°C ≤TA ≤+85°C for Industrial -40°C ≤TA ≤+125°C for Extended			
Param.	**Symbol**	**Characteristic(2)**		**Min**	**Max**	**Units**	**Conditions**
IS10	TLO:SCL	Clock Low Time	100 kHz mode	4.7	—	µs	Device must operate at a minimum of 1.5 MHz
			400 kHz mode	1.3	—	µs	Device must operate at a minimum of 10 MHz
			1 MHz mode(1)	0.5	—	µs	—
IS11	THI:SCL	Clock High Time	100 kHz mode	4.0	—	µs	Device must operate at a minimum of 1.5 MHz
			400 kHz mode	0.6	—	µs	Device must operate at a minimum of 10 MHz
			1 MHz mode(1)	0.5	—	µs	—
IS20	TF:SCL	SDAx and SCLx Fall Time	100 kHz mode	—	300	ns	CB is specified to be from 10 to 400 pF
			400 kHz mode	20 + 0.1 CB	300	ns	
			1 MHz mode(1)	—	100	ns	
IS21	TR:SCL	SDAx and SCLx Rise Time	100 kHz mode	—	1000	ns	CB is specified to be from 10 to 400 pF
			400 kHz mode	20 + 0.1 CB	300	ns	
			1 MHz mode(1)	—	300	ns	
IS25	TSU:DAT	Data Input Setup Time	100 kHz mode	250	—	ns	—
			400 kHz mode	100	—	ns	
			1 MHz mode(1)	100	—	ns	
IS26	THD:DAT	Data Input Hold Time	100 kHz mode	0	—	µs	—
			400 kHz mode	0	0.9	µs	
			1 MHz mode(1)	0	0.3	µs	
IS30	TSU:STA	Start Condition Setup Time	100 kHz mode	4.7	—	µs	Only relevant for Repeated Start condition
			400 kHz mode	0.6	—	µs	
			1 MHz mode(1)	0.25	—	µs	
IS31	THD:STA	Start Condition Hold Time	100 kHz mode	4.0	—	µs	After this period, the first clock pulse is generated
			400 kHz mode	0.6	—	µs	
			1 MHz mode(1)	0.25	—	µs	
IS33	TSU:STO	Stop Condition Setup Time	100 kHz mode	4.7	—	µs	—
			400 kHz mode	0.6	—	µs	
			1 MHz mode(1)	0.6	—	µs	
IS34	THD:STO	Stop Condition Hold Time	100 kHz mode	4000	—	ns	—
			400 kHz mode	600	—	ns	
			1 MHz mode(1)	250		ns	
IS40	TAA:SCL	Output Valid From Clock	100 kHz mode	0	3500	ns	—
			400 kHz mode	0	1000	ns	
			1 MHz mode(1)	0	350	ns	
IS45	TBF:SDA	Bus Free Time	100 kHz mode	4.7	—	µs	Time the bus must be free before a new transmission can start
			400 kHz mode	1.3	—	µs	
			1 MHz mode(1)	0.5	—	µs	
IS50	CB	Bus Capacitive Loading		—	400	pF	—

Note 1: Maximum pin capacitance = 10 pF for all I2Cx pins (for 1 MHz mode only).

2: These parameters are characterized by similarity, but are not tested in manufacturing.

TABLE 24-42: ADC MODULE SPECIFICATIONS

AC CHARACTERISTICS			Standard Operating Conditions: 3.0V to 3.6V (unless otherwise stated) Operating temperature -40°C ≤ TA ≤ +85°C for Industrial -40°C ≤ TA ≤ +125°C for Extended				
Param No.	**Symbol**	**Characteristic**	**Min.**	**Typ**	**Max.**	**Units**	**Conditions**
Device Supply							
AD01	AVDD	Module VDD Supply(2)	Greater of VDD – 0.3 or 3.0	—	Lesser of VDD + 0.3 or 3.6	V	—
AD02	AVSS	Module VSS Supply(2)	VSS – 0.3	—	VSS + 0.3	V	—
Reference Inputs							
AD05	VREFH	Reference Voltage High	AVSS + 2.5	—	AVDD	V	See **Note 1**
AD05a			3.0	—	3.6	V	VREFH = AVDD VREFL = AVSS = 0, see Note 2
AD06	VREFL	Reference Voltage Low	AVSS	—	AVDD – 2.5	V	See **Note 1**
AD06a			0	—	0	V	VREFH = AVDD VREFL = AVSS = 0, see Note 2
AD07	VREF	Absolute Reference Voltage(2)	2.5	—	3.6	V	VREF = VREFH - VREFL
AD08	IREF	Current Drain	— —	250 —	550 10	µA µA	ADC operating, See **Note 1** ADC off, See **Note 1**
AD08a	IAD	Operating Current	— —	7.0 2.7	9.0 3.2	mA mA	10-bit ADC mode, See **Note 2** 12-bit ADC mode, See **Note 2**
Analog Input							
AD12	VINH	Input Voltage Range VINH(2)	VINL	—	VREFH	V	This voltage reflects Sample and Hold Channels 0, 1, 2, and 3 (CH0-CH3), positive input
AD13	VINL	Input Voltage Range VINL(2)	VREFL	—	AVSS + 1V	V	This voltage reflects Sample and Hold Channels 0, 1, 2, and 3 (CH0-CH3), negative input
AD17	RIN	Recommended Impedance of Analog Voltage Source(3)	— —	— —	200 200	Ω Ω	10-bit ADC 12-bit ADC

Note 1: These parameters are not characterized or tested in manufacturing.

2: These parameters are characterized, but are not tested in manufacturing.

3: These parameters are assured by design, but are not characterized or tested in manufacturing.

© 2007-2012 Microchip Technology Inc.

TABLE 24-43: ADC MODULE SPECIFICATIONS (12-BIT MODE)

AC CHARACTERISTICS			Standard Operating Conditions: 3.0V to 3.6V (unless otherwise stated) Operating temperature -40°C ≤ TA ≤ +85°C for Industrial -40°C ≤ TA ≤ +125°C for Extended				
Param No.	**Symbol**	**Characteristic**	**Min.**	**Typ**	**Max.**	**Units**	**Conditions**
ADC Accuracy (12-bit Mode) – Measurements with external VREF+/VREF-(3)							
AD20a	Nr	Resolution(4)	12 data bits			bits	—
AD21a	INL	Integral Nonlinearity	-2	—	+2	LSb	VINL = AVSS = VREFL = 0V, AVDD = VREFH = 3.6V
AD22a	DNL	Differential Nonlinearity	>-1	—	<1	LSb	VINL = AVSS = VREFL = 0V, AVDD = VREFH = 3.6V
AD23a	GERR	Gain Error	—	3.4	10	LSb	VINL = AVSS = VREFL = 0V, AVDD = VREFH = 3.6V
AD24a	EOFF	Offset Error	—	0.9	5	LSb	VINL = AVSS = VREFL = 0V, AVDD = VREFH = 3.6V
AD25a	—	Monotonicity	—	—	—	—	Guaranteed(1)
ADC Accuracy (12-bit Mode) – Measurements with internal VREF+/VREF-(3)							
AD20a	Nr	Resolution(4)	12 data bits			bits	—
AD21a	INL	Integral Nonlinearity	-2	—	+2	LSb	VINL = AVSS = 0V, AVDD = 3.6V
AD22a	DNL	Differential Nonlinearity	>-1	—	<1	LSb	VINL = AVSS = 0V, AVDD = 3.6V
AD23a	GERR	Gain Error	—	10.5	20	LSb	VINL = AVSS = 0V, AVDD = 3.6V
AD24a	EOFF	Offset Error	—	3.8	10	LSb	VINL = AVSS = 0V, AVDD = 3.6V
AD25a	—	Monotonicity	—	—	—	—	Guaranteed(1)
Dynamic Performance (12-bit Mode)(2)							
AD30a	THD	Total Harmonic Distortion	—	—	-75	dB	—
AD31a	SINAD	Signal to Noise and Distortion	68.5	69.5	—	dB	—
AD32a	SFDR	Spurious Free Dynamic Range	80	—	—	dB	—
AD33a	FNYQ	Input Signal Bandwidth	—	—	250	kHz	—
AD34a	ENOB	Effective Number of Bits	11.09	11.3	—	bits	—

Note 1: The A/D conversion result never decreases with an increase in the input voltage, and has no missing codes.

2: These parameters are characterized by similarity, but are not tested in manufacturing.

3: These parameters are characterized, but are tested at 20 ksps only.

4: Injection currents > | 0 | can affect the ADC results by approximately 4-6 counts.

TABLE 24-44: ADC MODULE SPECIFICATIONS (10-BIT MODE)

AC CHARACTERISTICS			Standard Operating Conditions: 3.0V to 3.6V (unless otherwise stated) Operating temperature -40°C ≤ TA ≤ +85°C for Industrial -40°C ≤ TA ≤ +125°C for Extended				
Param No.	**Symbol**	**Characteristic**	**Min.**	**Typ**	**Max.**	**Units**	**Conditions**
ADC Accuracy (10-bit Mode) – Measurements with external VREF+/VREF-(3)							
AD20b	Nr	Resolution(4)	10 data bits			bits	—
AD21b	INL	Integral Nonlinearity	-1.5	—	+1.5	LSb	VINL = AVSS = VREFL = 0V, AVDD = VREFH = 3.6V
AD22b	DNL	Differential Nonlinearity	>-1	—	<1	LSb	VINL = AVSS = VREFL = 0V, AVDD = VREFH = 3.6V
AD23b	GERR	Gain Error	—	3	6	LSb	VINL = AVSS = VREFL = 0V, AVDD = VREFH = 3.6V
AD24b	EOFF	Offset Error	—	2	5	LSb	VINL = AVSS = VREFL = 0V, AVDD = VREFH = 3.6V
AD25b	—	Monotonicity	—	—	—	—	Guaranteed(1)
ADC Accuracy (10-bit Mode) – Measurements with internal VREF+/VREF-(3)							
AD20b	Nr	Resolution(4)	10 data bits			bits	—
AD21b	INL	Integral Nonlinearity	-1	—	+1	LSb	VINL = AVSS = 0V, AVDD = 3.6V
AD22b	DNL	Differential Nonlinearity	>-1	—	<1	LSb	VINL = AVSS = 0V, AVDD = 3.6V
AD23b	GERR	Gain Error	—	7	15	LSb	VINL = AVSS = 0V, AVDD = 3.6V
AD24b	EOFF	Offset Error	—	3	7	LSb	VINL = AVSS = 0V, AVDD = 3.6V
AD25b	—	Monotonicity	—	—	—	—	Guaranteed(1)
Dynamic Performance (10-bit Mode)(2)							
AD30b	THD	Total Harmonic Distortion	—	—	-64	dB	—
AD31b	SINAD	Signal to Noise and Distortion	57	58.5	—	dB	—
AD32b	SFDR	Spurious Free Dynamic Range	72	—	—	dB	—
AD33b	FNYQ	Input Signal Bandwidth	—	—	550	kHz	—
AD34b	ENOB	Effective Number of Bits	9.16	9.4	—	bits	—

Note 1: The A/D conversion result never decreases with an increase in the input voltage, and has no missing codes.

2: These parameters are characterized by similarity, but are not tested in manufacturing.

3: These parameters are characterized, but are tested at 20 ksps only.

4: Injection currents > | 0 | can affect the ADC results by approximately 4-6 counts.

© 2007-2012 Microchip Technology Inc.

FIGURE 24-26: ADC CONVERSION (12-BIT MODE) TIMING CHARACTERISTICS (ASAM = 0, SSRC<2:0> = 000)

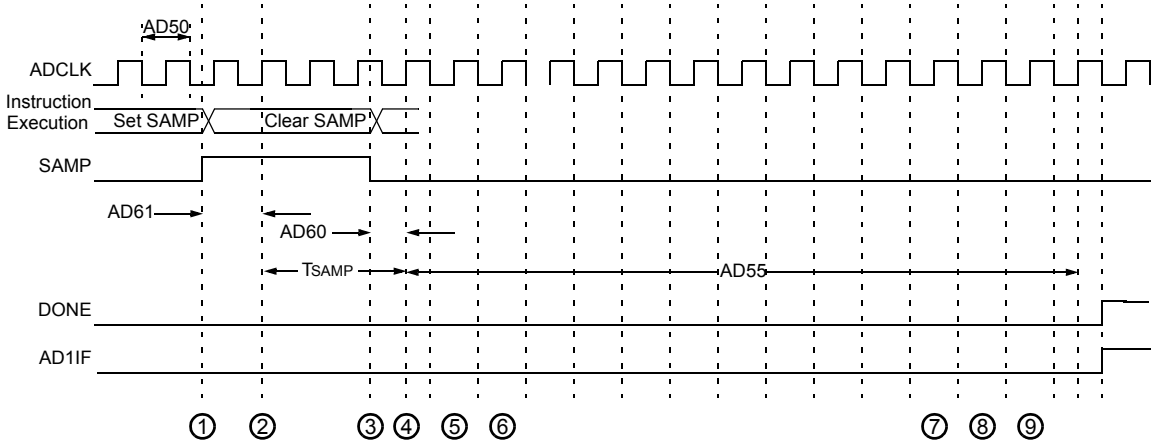

① – Software sets AD1CON. SAMP to start sampling.

② – Sampling starts after discharge period. TSAMP is described in **Section 16. "Analog-to-Digital Converter (ADC)"** (DS70183) in the *"dsPIC33F/PIC24H Family Reference Manual"*.

③ – Software clears AD1CON. SAMP to start conversion.

④ – Sampling ends, conversion sequence starts.

⑤ – Convert bit 11.

⑥ – Convert bit 10.

⑦ – Convert bit 1.

⑧ – Convert bit 0.

⑨ – One TAD for end of conversion.

TABLE 24-45: ADC CONVERSION (12-BIT MODE) TIMING REQUIREMENTS

AC CHARACTERISTICS			Standard Operating Conditions: 3.0V to 3.6V (unless otherwise stated) Operating temperature -40°C ≤TA ≤+85°C for Industrial -40°C ≤TA ≤+125°C for Extended				
Param No.	**Symbol**	**Characteristic**	**Min.**	**Typ**	**Max.**	**Units**	**Conditions**
Clock Parameters							
AD50	TAD	ADC Clock Period(2)	117.6	—	—	ns	—
AD51	tRC	ADC Internal RC Oscillator Period(2)	—	250	—	ns	—
Conversion Rate							
AD55	tCONV	Conversion Time(2)	—	14 TAD	—	ns	—
AD56	FCNV	Throughput Rate(2)	—	—	500	Ksps	—
AD57	TSAMP	Sample Time(2)	3.0 TAD	—	—	—	—
Timing Parameters							
AD60	tPCS	Conversion Start from Sample Trigger(2)	2.0 TAD	—	3.0 TAD	—	Auto convert trigger not selected
AD61	tPSS	Sample Start from Setting Sample (SAMP) bit(2)	2.0 TAD	—	3.0 TAD	—	—
AD62	tCSS	Conversion Completion to Sample Start (ASAM = 1)(2)	—	0.5 TAD	—	—	—
AD63	tDPU	Time to Stabilize Analog Stage from ADC Off to ADC On(2)	—	—	20	μs	—

Note 1: Because the sample caps will eventually lose charge, clock rates below 10 kHz may affect linearity performance, especially at elevated temperatures.

2: These parameters are characterized but not tested in manufacturing.

FIGURE 24-27: ADC CONVERSION (10-BIT MODE) TIMING CHARACTERISTICS (CHPS<1:0> = 01, SIMSAM = 0, ASAM = 0, SSRC<2:0> = 000)

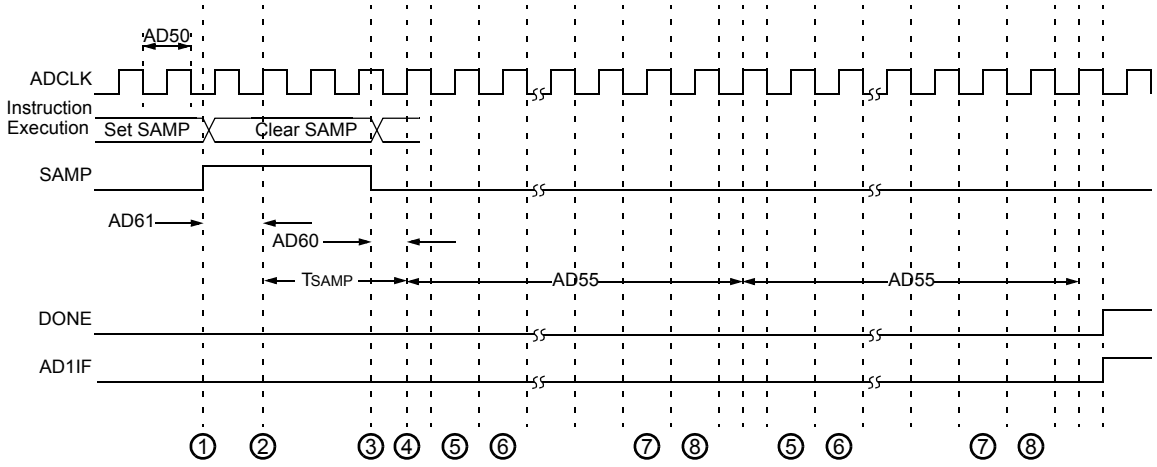

1. – Software sets AD1CON. SAMP to start sampling.
2. – Sampling starts after discharge period. TSAMP is described in **Section 16. "Analog-to-Digital Converter (ADC)"** (DS70183) in the *"dsPIC33F/PIC24H Family Reference Manual"*.
3. – Software clears AD1CON. SAMP to start conversion.
4. – Sampling ends, conversion sequence starts.
5. – Convert bit 9.
6. – Convert bit 8.
7. – Convert bit 0.
8. – One TAD for end of conversion.

FIGURE 24-28: ADC CONVERSION (10-BIT MODE) TIMING CHARACTERISTICS (CHPS<1:0> = 01, SIMSAM = 0, ASAM = 1, SSRC<2:0> = 111, SAMC<4:0> = 00001)

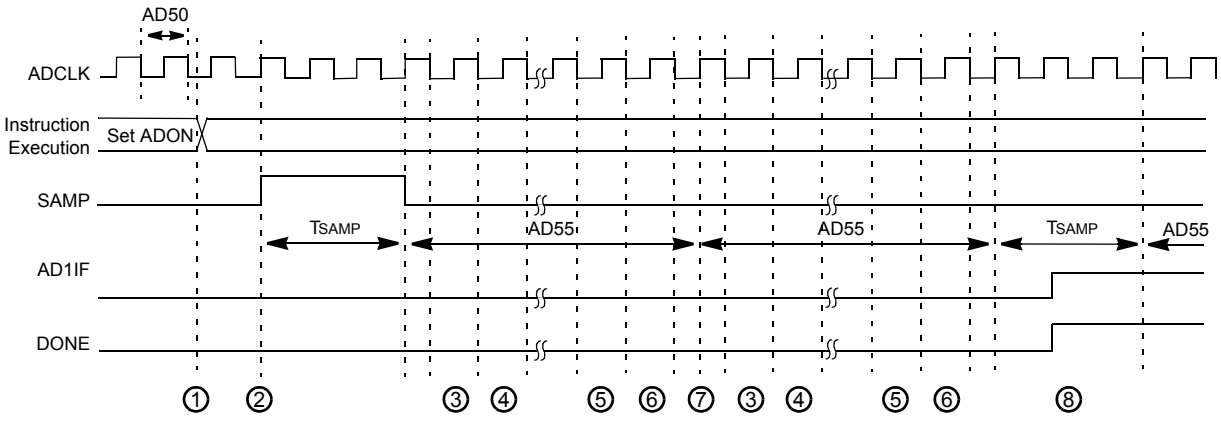

1. – Software sets AD1CON. ADON to start AD operation.
2. – Sampling starts after discharge period. TSAMP is described in **Section 16. "Analog-to-Digital Converter (ADC)"** (DS70183) in the *"dsPIC33F/PIC24H Family Reference Manual"*.
3. – Convert bit 9.
4. – Convert bit 8.
5. – Convert bit 0.
6. – One TAD for end of conversion.
7. – Begin conversion of next channel.
8. – Sample for time specified by SAMC<4:0>.

© 2007-2012 Microchip Technology Inc.

TABLE 24-46: ADC CONVERSION (10-BIT MODE) TIMING REQUIREMENTS

AC CHARACTERISTICS			Standard Operating Conditions: 3.0V to 3.6V (unless otherwise stated) Operating temperature -40°C ≤TA ≤+85°C for Industrial -40°C ≤TA ≤+125°C for Extended				
Param No.	**Symbol**	**Characteristic**	**Min.**	**Typ(1)**	**Max.**	**Units**	**Conditions**
Clock Parameters							
AD50	TAD	ADC Clock Period(1)	76	—	—	ns	—
AD51	tRC	ADC Internal RC Oscillator Period(1)	—	250	—	ns	—
Conversion Rate							
AD55	tCONV	Conversion Time(1)	—	12 TAD	—	—	—
AD56	FCNV	Throughput Rate(1)	—	—	1.1	Msps	—
AD57	TSAMP	Sample Time(1)	2.0 TAD	—	—	—	—
Timing Parameters							
AD60	tPCS	Conversion Start from Sample Trigger(1)	2.0 TAD	—	3.0 TAD	—	Auto-Convert Trigger not selected
AD61	tPSS	Sample Start from Setting Sample (SAMP) bit(1)	2.0 TAD	—	3.0 TAD	—	—
AD62	tCSS	Conversion Completion to Sample Start (ASAM = 1)(1)	—	0.5 TAD	—	—	—
AD63	tDPU	Time to Stabilize Analog Stage from ADC Off to ADC On(1)	—	—	20	μs	—

Note 1: These parameters are characterized but not tested in manufacturing.

2: Because the sample caps will eventually lose charge, clock rates below 10 kHz may affect linearity performance, especially at elevated temperatures.

NOTES:

© 2007-2012 Microchip Technology Inc.

25.0 HIGH TEMPERATURE ELECTRICAL CHARACTERISTICS

This section provides an overview of dsPIC33FJ32MC202/204 and dsPIC33FJ16MC304 electrical characteristics for devices operating in an ambient temperature range of -40°C to +150°C.

The specifications between -40°C to +150°C are identical to those shown in **Section 24.0 "Electrical Characteristics"** for operation between -40°C to +125°C, with the exception of the parameters listed in this section.

Parameters in this section begin with an H, which denotes High temperature. For example, parameter DC10 in **Section 24.0 "Electrical Characteristics"** is the Industrial and Extended temperature equivalent of HDC10.

Absolute maximum ratings for the dsPIC33FJ32MC202/204 and dsPIC33FJ16MC304 high temperature devices are listed below. Exposure to these maximum rating conditions for extended periods can affect device reliability. Functional operation of the device at these or any other conditions above the parameters indicated in the operation listings of this specification is not implied.

Absolute Maximum Ratings(1)

Ambient temperature under bias(4) ..... -40°C to +150°C
Storage temperature ..... -65°C to +160°C
Voltage on V_{DD} with respect to V_{SS} ..... -0.3V to +4.0V
Voltage on any pin that is not 5V tolerant with respect to V_{SS}(5) ..... -0.3V to (V_{DD} + 0.3V)
Voltage on any 5V tolerant pin with respect to V_{SS} when V_{DD} < 3.0V(5) ..... -0.3V to 3.6V
Voltage on any 5V tolerant pin with respect to V_{SS} when $V_{DD} \geq 3.0V$(5) ..... -0.3V to 5.6V
Maximum current out of V_{SS} pin ..... 60 mA
Maximum current into V_{DD} pin(2) ..... 60 mA
Maximum junction temperature ..... +155°C
Maximum current sourced/sunk by any 2x I/O pin(3) ..... 2 mA
Maximum current sourced/sunk by any 4x I/O pin(3) ..... 4 mA
Maximum current sourced/sunk by any 8x I/O pin(3) ..... 8 mA
Maximum current sunk by all ports combined ..... 70 mA
Maximum current sourced by all ports combined(2) ..... 70 mA

Note 1: Stresses above those listed under "Absolute Maximum Ratings" can cause permanent damage to the device. This is a stress rating only, and functional operation of the device at those or any other conditions above those indicated in the operation listings of this specification is not implied. Exposure to maximum rating conditions for extended periods can affect device reliability.

2: Maximum allowable current is a function of device maximum power dissipation (see Table 25-2).

3: Unlike devices at 125°C and below, the specifications in this section also apply to the CLKOUT, V_{REF+}, V_{REF-}, SCLx, SDAx, PGCx and PGDx pins.

4: AEC-Q100 reliability testing for devices intended to operate at 150°C is 1,000 hours. Any design in which the total operating time from 125°C to 150°C will be greater than 1,000 hours is not warranted without prior written approval from Microchip Technology Inc.

5: Refer to the **"Pin Diagrams"** section for 5V tolerant pins.

25.1 High Temperature DC Characteristics

TABLE 25-1: OPERATING MIPS VS. VOLTAGE

Characteristic	VDD Range (in Volts)	Temperature Range (in °C)	Max MIPS
			dsPIC33FJ32MC202/204 and dsPIC33FJ16MC304
HDC5	VBOR to 3.6V(1)	-40°C to +150°C	20

Note 1: Device is functional at VBORMIN < VDD < VDDMIN. Analog modules such as the ADC will have degraded performance. Device functionality is tested but not characterized. Refer to parameter BO10 in Table 24-11 for the minimum and maximum BOR values.

TABLE 25-2: THERMAL OPERATING CONDITIONS

Rating	Symbol	Min	Typ	Max	Unit
High Temperature Devices					
Operating Junction Temperature Range	TJ	-40	—	+155	°C
Operating Ambient Temperature Range	TA	-40	—	+150	°C
Power Dissipation: Internal chip power dissipation: PINT = VDD x (IDD - Σ IOH) I/O Pin Power Dissipation: I/O = Σ ({VDD - VOH} x IOH) + Σ (VOL x IOL)	PD	PINT + PI/O			W
Maximum Allowed Power Dissipation	PDMAX	(TJ - TA)/θJA			W

TABLE 25-3: DC TEMPERATURE AND VOLTAGE SPECIFICATIONS

DC CHARACTERISTICS			Standard Operating Conditions: 3.0V to 3.6V (unless otherwise stated) Operating temperature -40°C ≤TA ≤+150°C for High Temperature				
Parameter No.	Symbol	Characteristic	Min	Typ	Max	Units	Conditions
Operating Voltage							
HDC10	**Supply Voltage**						
	VDD	—	3.0	3.3	3.6	V	-40°C to +150°C

© 2007-2012 Microchip Technology Inc.

TABLE 25-4: DC CHARACTERISTICS: POWER-DOWN CURRENT (IPD)

DC CHARACTERISTICS			Standard Operating Conditions: 3.0V to 3.6V (unless otherwise stated) Operating temperature -40°C ≤TA ≤+150°C for High Temperature			
Parameter No.	**Typical**	**Max**	**Units**	**Conditions**		
Power-Down Current (IPD)						
HDC60e	250	2000	µA	+150°C	3.3V	Base Power-Down Current(1,3)
HDC61c	3	5	µA	+150°C	3.3V	Watchdog Timer Current: ΔIWDT(2,4)

Note 1: Base IPD is measured with all peripherals and clocks shut down. All I/Os are configured as inputs and pulled to VSS. WDT, etc., are all switched off, and VREGS (RCON<8>) = 1.

2: The Δ current is the additional current consumed when the module is enabled. This current should be added to the base IPD current.

3: These currents are measured on the device containing the most memory in this family.

4: These parameters are characterized, but are not tested in manufacturing.

TABLE 25-5: DC CHARACTERISTICS: OPERATING CURRENT (IDD)

DC CHARACTERISTICS			Standard Operating Conditions: 3.0V to 3.6V (unless otherwise stated) Operating temperature -40°C ≤TA ≤+150°C for High Temperature			
Parameter No.	**Typical(1)**	**Max**	**Units**	**Conditions**		
HDC20	19	35	mA	+150°C	3.3V	10 MIPS
HDC21	27	45	mA	+150°C	3.3V	16 MIPS
HDC22	33	55	mA	+150°C	3.3V	20 MIPS

Note 1: These parameters are characterized, but are not tested in manufacturing.

TABLE 25-6: DC CHARACTERISTICS: DOZE CURRENT (IDOZE)

DC CHARACTERISTICS			Standard Operating Conditions: 3.0V to 3.6V (unless otherwise stated) Operating temperature -40°C ≤TA ≤+150°C for High Temperature				
Parameter No.	**Typical(1)**	**Max**	**Doze Ratio**	**Units**	**Conditions**		
HDC72a	39	45	1:2	mA	+150°C	3.3V	20 MIPS
HDC72f	18	25	1:64	mA			
HDC72g	18	25	1:128	mA			

Note 1: Parameters with Doze ratios of 1:2 and 1:64 are characterized, but are not tested in manufacturing.

TABLE 25-7: DC CHARACTERISTICS: I/O PIN OUTPUT SPECIFICATIONS

DC CHARACTERISTICS			Standard Operating Conditions: 3.0V to 3.6V (unless otherwise stated) Operating temperature -40°C ≤TA ≤+150°C for High Temperature				
Param.	**Symbol**	**Characteristic**	**Min.**	**Typ.**	**Max.**	**Units**	**Conditions**
DO10	VOL	**Output Low Voltage** I/O Pins: 2x Sink Driver Pins - All pins not defined by 4x or 8x driver pins	—	—	0.4	V	IOL ≤1.8 mA, VDD = 3.3V See **Note 1**
		Output Low Voltage I/O Pins: 4x Sink Driver Pins - RA0, RA1, RB5, RB6, RB8, RB9, RB14	—	—	0.4	V	IOL ≤3.6 mA, VDD = 3.3V See **Note 1**
		Output Low Voltage I/O Pins: 8x Sink Driver Pins - OSCO, CLKO, RA3	—	—	0.4	V	IOL ≤6 mA, VDD = 3.3V See **Note 1**
DO20	VOH	**Output High Voltage** I/O Pins: 2x Source Driver Pins - All pins not defined by 4x or 8x driver pins	2.4	—	—	V	IOL ≥ -1.8 mA, VDD = 3.3V See **Note 1**
		Output High Voltage I/O Pins: 4x Source Driver Pins - RA0, RA1, RB5, RB6, RB8, RB9, RB14	2.4	—	—	V	IOL ≥ -3 mA, VDD = 3.3V See **Note 1**
		Output High Voltage I/O Pins: 8x Source Driver Pins - OSCO, CLKO, RA3	2.4	—	—	V	IOL ≥ -6 mA, VDD = 3.3V See **Note 1**
DO20A	VOH1	**Output High Voltage** I/O Pins: 2x Source Driver Pins - All pins not defined by 4x or 8x driver pins	1.5	—	—	V	IOH ≥ -1.9 mA, VDD = 3.3V See **Note 1**
			2.0	—	—		IOH ≥ -1.85 mA, VDD = 3.3V See **Note 1**
			3.0	—	—		IOH ≥ -1.4 mA, VDD = 3.3V See **Note 1**
		Output High Voltage 4x Source Driver Pins - RA0, RA1, RB5, RB6, RB8, RB9, RB14	1.5	—	—	V	IOH ≥ -3.9 mA, VDD = 3.3V See **Note 1**
			2.0	—	—		IOH ≥ -3.7 mA, VDD = 3.3V See **Note 1**
			3.0	—	—		IOH ≥ -2 mA, VDD = 3.3V See **Note 1**
		Output High Voltage 8x Source Driver Pins -OSCO, CLKO, RA3	1.5	—	—	V	IOH ≥ -7.5 mA, VDD = 3.3V See **Note 1**
			2.0	—	—		IOH ≥ -6.8 mA, VDD = 3.3V See **Note 1**
			3.0	—	—		IOH ≥ -3 mA, VDD = 3.3V See **Note 1**

Note 1: Parameters are characterized, but not tested.

© 2007-2012 Microchip Technology Inc.

25.2 AC Characteristics and Timing Parameters

The information contained in this section defines dsPIC33FJ32MC202/204 and dsPIC33FJ16MC304 AC characteristics and timing parameters for high temperature devices. However, all AC timing specifications in this section are the same as those in **Section 24.2 "AC Characteristics and Timing Parameters"**, with the exception of the parameters listed in this section.

Parameters in this section begin with an H, which denotes High temperature. For example, parameter OS53 in **Section 24.2 "AC Characteristics and Timing Parameters"** is the Industrial and Extended temperature equivalent of HOS53.

TABLE 25-8: TEMPERATURE AND VOLTAGE SPECIFICATIONS – AC

AC CHARACTERISTICS	**Standard Operating Conditions: 3.0V to 3.6V (unless otherwise stated)** Operating temperature -40°C ≤TA ≤+150°C for High Temperature Operating voltage VDD range as described in Table 25-1.

FIGURE 25-1: LOAD CONDITIONS FOR DEVICE TIMING SPECIFICATIONS

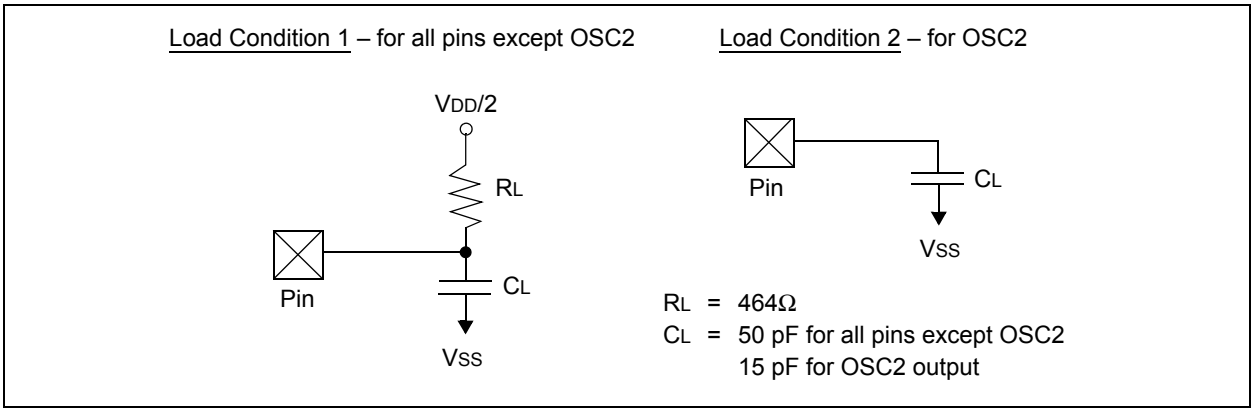

TABLE 25-9: PLL CLOCK TIMING SPECIFICATIONS

AC CHARACTERISTICS		**Standard Operating Conditions: 3.0V to 3.6V (unless otherwise stated)** Operating temperature -40°C ≤TA ≤+150°C for High Temperature					
Param No.	**Symbol**	**Characteristic**	**Min**	**Typ**	**Max**	**Units**	**Conditions**
HOS53	DCLK	CLKO Stability (Jitter)(1)	-5	0.5	5	%	Measured over 100 ms period

Note 1: These parameters are characterized by similarity, but are not tested in manufacturing. This specification is based on clock cycle by clock cycle measurements. To calculate the effective jitter for individual time bases or communication clocks use this formula:

$$Peripheral\ Clock\ Jitter = \frac{DCLK}{\sqrt{\left(\frac{FOSC}{Peripheral\ Bit\ Rate\ Clock}\right)}}$$

For example: Fosc = 32 MHz, DCLK = 5%, SPI bit rate clock, (i.e., SCK) is 2 MHz.

$$SPI\ SCK\ Jitter = \left[\frac{DCLK}{\sqrt{\left(\frac{32\ MHz}{2\ MHz}\right)}}\right] = \left[\frac{5\%}{\sqrt{16}}\right] = \left[\frac{5\%}{4}\right] = 1.25\%$$

TABLE 25-10: SPIx MASTER MODE (CKE = 0) TIMING REQUIREMENTS

AC CHARACTERISTICS		Standard Operating Conditions: 3.0V to 3.6V (unless otherwise stated) Operating temperature -40°C ≤TA ≤+150°C for High Temperature					
Param No.	**Symbol**	**Characteristic(1)**	**Min**	**Typ**	**Max**	**Units**	**Conditions**
HSP35	TscH2doV, TscL2doV	SDOx Data Output Valid after SCKx Edge	—	10	25	ns	—
HSP40	TdiV2scH, TdiV2scL	Setup Time of SDIx Data Input to SCKx Edge	28	—	—	ns	—
HSP41	TscH2diL, TscL2diL	Hold Time of SDIx Data Input to SCKx Edge	35	—	—	ns	—

Note 1: These parameters are characterized but not tested in manufacturing.

TABLE 25-11: SPIx MODULE MASTER MODE (CKE = 1) TIMING REQUIREMENTS

AC CHARACTERISTICS		Standard Operating Conditions: 3.0V to 3.6V (unless otherwise stated) Operating temperature -40°C ≤TA ≤+150°C for High Temperature					
Param No.	**Symbol**	**Characteristic(1)**	**Min**	**Typ**	**Max**	**Units**	**Conditions**
HSP35	TscH2doV, TscL2doV	SDOx Data Output Valid after SCKx Edge	—	10	25	ns	—
HSP36	TdoV2sc, TdoV2scL	SDOx Data Output Setup to First SCKx Edge	35	—	—	ns	—
HSP40	TdiV2scH, TdiV2scL	Setup Time of SDIx Data Input to SCKx Edge	28	—	—	ns	—
HSP41	TscH2diL, TscL2diL	Hold Time of SDIx Data Input to SCKx Edge	35	—	—	ns	—

Note 1: These parameters are characterized but not tested in manufacturing.

© 2007-2012 Microchip Technology Inc.

TABLE 25-12: SPIx MODULE SLAVE MODE (CKE = 0) TIMING REQUIREMENTS

AC CHARACTERISTICS		Standard Operating Conditions: 3.0V to 3.6V (unless otherwise stated) Operating temperature -40°C ≤TA ≤+150°C for High Temperature					
Param No.	**Symbol**	**Characteristic(1)**	**Min**	**Typ**	**Max**	**Units**	**Conditions**
HSP35	TscH2doV, TscL2doV	SDOx Data Output Valid after SCKx Edge	—	—	35	ns	—
HSP40	TdiV2scH, TdiV2scL	Setup Time of SDIx Data Input to SCKx Edge	25	—	—	ns	—
HSP41	TscH2diL, TscL2diL	Hold Time of SDIx Data Input to SCKx Edge	25	—	—	ns	—
HSP51	TssH2doZ	$\overline{SSx}$ ↑ to SDOx Output High-Impedance	15	—	55	ns	See **Note 2**

Note 1: These parameters are characterized but not tested in manufacturing.

2: Assumes 50 pF load on all SPIx pins.

TABLE 25-13: SPIx MODULE SLAVE MODE (CKE = 1) TIMING REQUIREMENTS

AC CHARACTERISTICS		Standard Operating Conditions: 3.0V to 3.6V (unless otherwise stated) Operating temperature -40°C ≤TA ≤+150°C for High Temperature					
Param No.	**Symbol**	**Characteristic(1)**	**Min**	**Typ**	**Max**	**Units**	**Conditions**
HSP35	TscH2doV, TscL2doV	SDOx Data Output Valid after SCKx Edge	—	—	35	ns	—
HSP40	TdiV2scH, TdiV2scL	Setup Time of SDIx Data Input to SCKx Edge	25	—	—	ns	—
HSP41	TscH2diL, TscL2diL	Hold Time of SDIx Data Input to SCKx Edge	25	—	—	ns	—
HSP51	TssH2doZ	$\overline{SSx}$ ↑ to SDOx Output High-Impedance	15	—	55	ns	See **Note 2**
HSP60	TssL2doV	SDOx Data Output Valid after $\overline{SSx}$ Edge	—	—	55	ns	—

Note 1: These parameters are characterized but not tested in manufacturing.

2: Assumes 50 pF load on all SPIx pins.

TABLE 25-14: INTERNAL RC ACCURACY

AC CHARACTERISTICS		Standard Operating Conditions: 3.0V to 3.6V (unless otherwise stated) Operating temperature -40°C ≤TA ≤+150°C for Extended					
Param No.	**Characteristic**	**Min**	**Typ**	**Max**	**Units**	**Conditions**	
	LPRC @ 32.768 kHz(1,2)						
HF21	LPRC	-70	—	+70	%	-40°C ≤TA ≤+150°C	VDD = 3.0-3.6V

Note 1: Change of LPRC frequency as VDD changes.

2: LPRC accuracy impacts the Watchdog Timer Time-out Period (TWDT1). See **Section 21.4 "Watchdog Timer (WDT)"** for more information.

TABLE 25-15: ADC MODULE SPECIFICATIONS

AC CHARACTERISTICS		Standard Operating Conditions: 3.0V to 3.6V (unless otherwise stated) Operating temperature -40°C ≤TA ≤+150°C for High Temperature					
Param No.	Symbol	Characteristic	Min	Typ	Max	Units	Conditions
Reference Inputs							
HAD08	IREF	Current Drain	— —	250 —	600 50	μA μA	ADC operating, See **Note 1** ADC off, See **Note 1**

Note 1: These parameters are not characterized or tested in manufacturing.

2: These parameters are characterized, but are not tested in manufacturing.

TABLE 25-16: ADC MODULE SPECIFICATIONS (12-BIT MODE)(3)

AC CHARACTERISTICS		Standard Operating Conditions: 3.0V to 3.6V (unless otherwise stated) Operating temperature -40°C ≤TA ≤+150°C for High Temperature					
Param No.	Symbol	Characteristic	Min	Typ	Max	Units	Conditions
ADC Accuracy (12-bit Mode) – Measurements with External VREF+/VREF-(1)							
HAD20a	Nr	Resolution(3)	12 data bits			bits	—
HAD21a	INL	Integral Nonlinearity	-2	—	+2	LSb	VINL = AVSS = VREFL = 0V, AVDD = VREFH = 3.6V
HAD22a	DNL	Differential Nonlinearity	> -1	—	< 1	LSb	VINL = AVSS = VREFL = 0V, AVDD = VREFH = 3.6V
HAD23a	GERR	Gain Error	-2	—	10	LSb	VINL = AVSS = VREFL = 0V, AVDD = VREFH = 3.6V
HAD24a	EOFF	Offset Error	-3	—	4	LSb	VINL = AVSS = VREFL = 0V, AVDD = VREFH = 3.6V
ADC Accuracy (12-bit Mode) – Measurements with Internal VREF+/VREF-(1)							
HAD20a	Nr	Resolution(3)	12 data bits			bits	—
HAD21a	INL	Integral Nonlinearity	-2	—	+2	LSb	VINL = AVSS = 0V, AVDD = 3.6V
HAD22a	DNL	Differential Nonlinearity	> -1	—	< 1	LSb	VINL = AVSS = 0V, AVDD = 3.6V
HAD23a	GERR	Gain Error	2	—	20	LSb	VINL = AVSS = 0V, AVDD = 3.6V
HAD24a	EOFF	Offset Error	2	—	10	LSb	VINL = AVSS = 0V, AVDD = 3.6V
Dynamic Performance (12-bit Mode)(2)							
HAD33a	FNYQ	Input Signal Bandwidth	—	—	200	kHz	—

Note 1: These parameters are characterized, but are tested at 20 ksps only.

2: These parameters are characterized by similarity, but are not tested in manufacturing.

3: Injection currents > | 0 | can affect the ADC results by approximately 4-6 counts.

© 2007-2012 Microchip Technology Inc.

TABLE 25-17: ADC MODULE SPECIFICATIONS (10-BIT MODE)(3)

AC CHARACTERISTICS		Standard Operating Conditions: 3.0V to 3.6V (unless otherwise stated) Operating temperature -40°C ≤TA ≤+150°C for High Temperature					
Param No.	**Symbol**	**Characteristic**	**Min**	**Typ**	**Max**	**Units**	**Conditions**
ADC Accuracy (10-bit Mode) – Measurements with External VREF+/VREF-(1)							
HAD20b	Nr	Resolution(3)	10 data bits			bits	—
HAD21b	INL	Integral Nonlinearity	-3	—	3	LSb	VINL = AVSS = VREFL = 0V, AVDD = VREFH = 3.6V
HAD22b	DNL	Differential Nonlinearity	> -1	—	< 1	LSb	VINL = AVSS = VREFL = 0V, AVDD = VREFH = 3.6V
HAD23b	GERR	Gain Error	-5	—	6	LSb	VINL = AVSS = VREFL = 0V, AVDD = VREFH = 3.6V
HAD24b	EOFF	Offset Error	-1	—	5	LSb	VINL = AVSS = VREFL = 0V, AVDD = VREFH = 3.6V
ADC Accuracy (10-bit Mode) – Measurements with Internal VREF+/VREF-(1)							
HAD20b	Nr	Resolution(3)	10 data bits			bits	—
HAD21b	INL	Integral Nonlinearity	-2	—	2	LSb	VINL = AVSS = 0V, AVDD = 3.6V
HAD22b	DNL	Differential Nonlinearity	> -1	—	< 1	LSb	VINL = AVSS = 0V, AVDD = 3.6V
HAD23b	GERR	Gain Error	-5	—	15	LSb	VINL = AVSS = 0V, AVDD = 3.6V
HAD24b	EOFF	Offset Error	-1.5	—	7	LSb	VINL = AVSS = 0V, AVDD = 3.6V
Dynamic Performance (10-bit Mode)(2)							
HAD33b	FNYQ	Input Signal Bandwidth	—	—	400	kHz	—

Note 1: These parameters are characterized, but are tested at 20 ksps only.

2: These parameters are characterized by similarity, but are not tested in manufacturing.

3: Injection currents > | 0 | can affect the ADC results by approximately 4-6 counts.

TABLE 25-18: ADC CONVERSION (12-BIT MODE) TIMING REQUIREMENTS

AC CHARACTERISTICS		Standard Operating Conditions: 3.0V to 3.6V (unless otherwise stated) Operating temperature -40°C ≤TA ≤+150°C for High Temperature					
Param No.	Symbol	Characteristic	Min	Typ	Max	Units	Conditions
Clock Parameters							
HAD50	TAD	ADC Clock Period(1)	147	—	—	ns	—
Conversion Rate							
HAD56	FCNV	Throughput Rate(1)	—	—	400	Ksps	—

Note 1: These parameters are characterized but not tested in manufacturing.

TABLE 25-19: ADC CONVERSION (10-BIT MODE) TIMING REQUIREMENTS

AC CHARACTERISTICS		Standard Operating Conditions: 3.0V to 3.6V (unless otherwise stated) Operating temperature -40°C ≤TA ≤+150°C for High Temperature					
Param No.	Symbol	Characteristic	Min	Typ	Max	Units	Conditions
Clock Parameters							
HAD50	TAD	ADC Clock Period(1)	104	—	—	ns	—
Conversion Rate							
HAD56	FCNV	Throughput Rate(1)	—	—	800	Ksps	—

Note 1: These parameters are characterized but not tested in manufacturing.

© 2007-2012 Microchip Technology Inc.

26.0 DC AND AC DEVICE CHARACTERISTICS GRAPHS

Note: The graphs provided following this note are a statistical summary based on a limited number of samples and are provided for design guidance purposes only. The performance characteristics listed herein are not tested or guaranteed. In some graphs, the data presented may be outside the specified operating range (e.g., outside specified power supply range) and therefore, outside the warranted range.

FIGURE 26-1: VOH – 2x DRIVER PINS

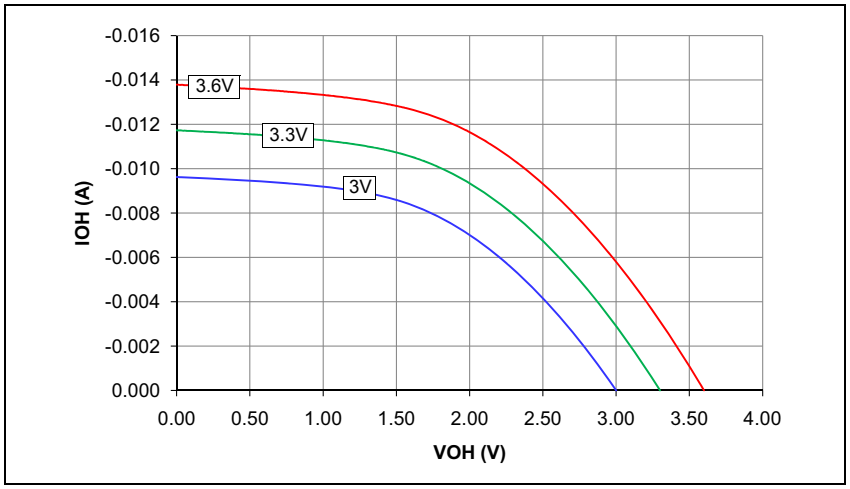

FIGURE 26-2: VOH – 4x DRIVER PINS

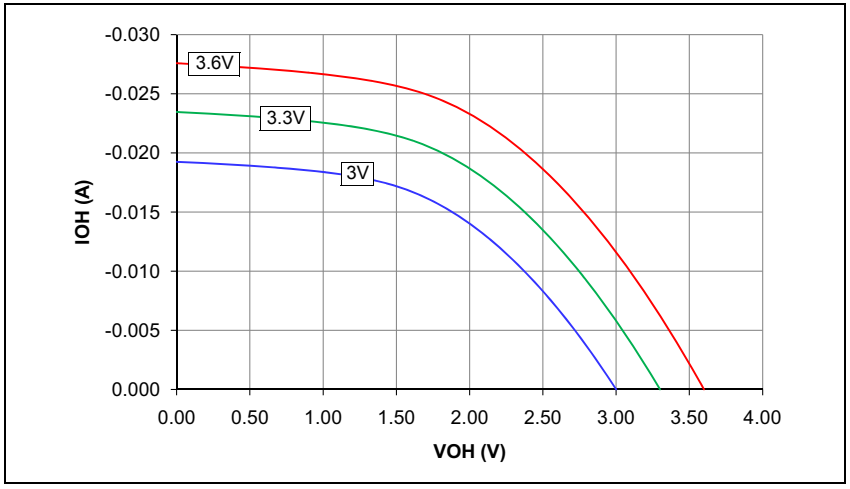

FIGURE 26-3: VOH – 8x DRIVER PINS

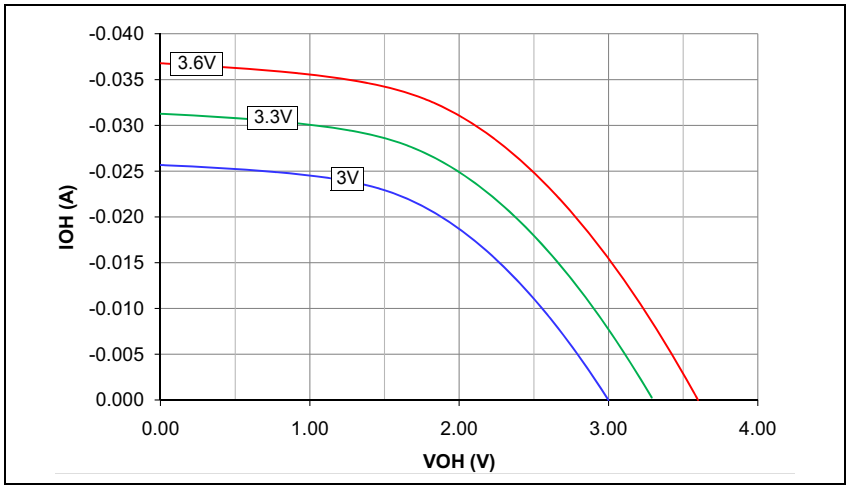

FIGURE 26-4: VOH – 16x DRIVER PINS

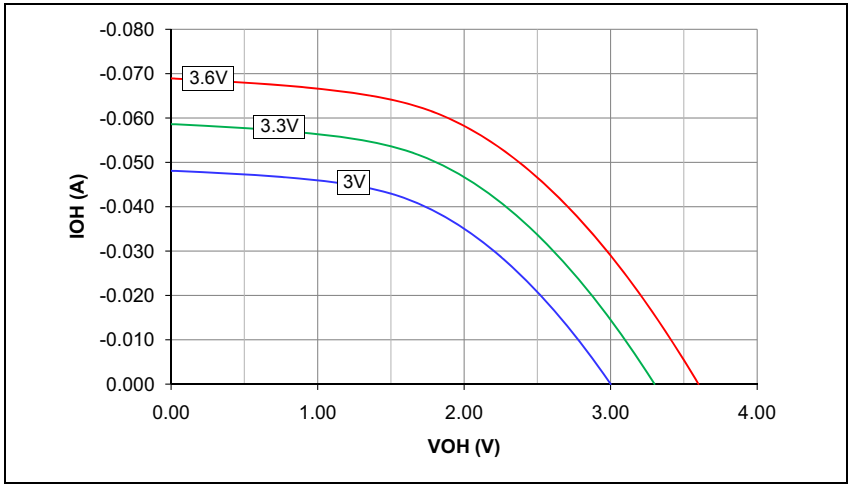

© 2007-2012 Microchip Technology Inc.

FIGURE 26-5: VOL – 2x DRIVER PINS

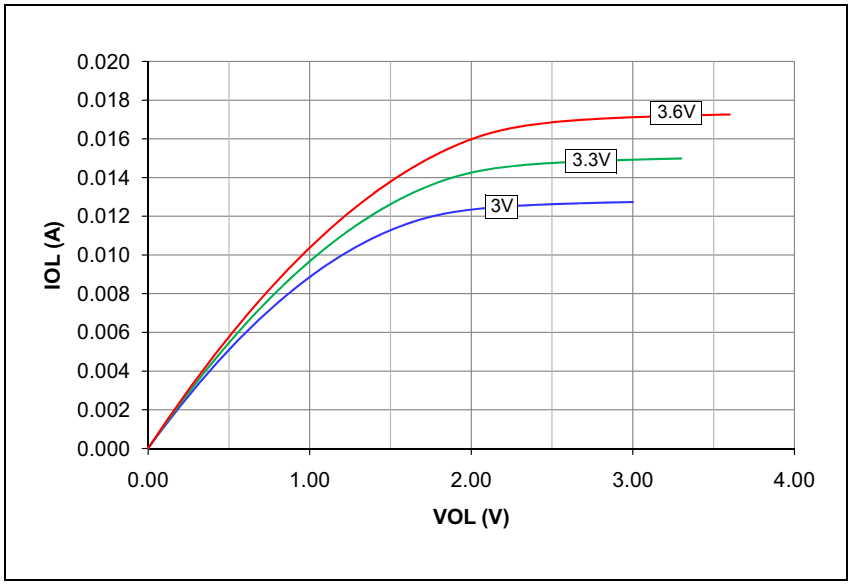

FIGURE 26-6: VOL – 4x DRIVER PINS

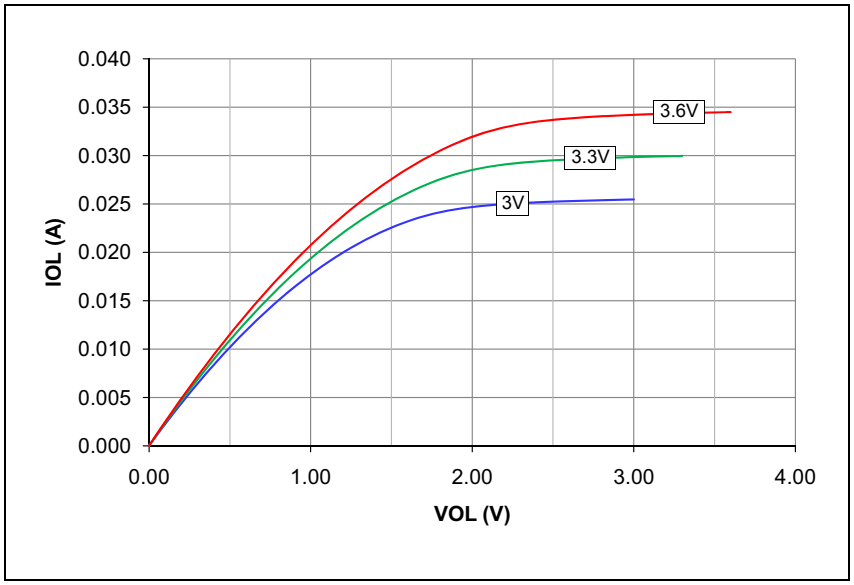

FIGURE 26-7: VOL – 8x DRIVER PINS

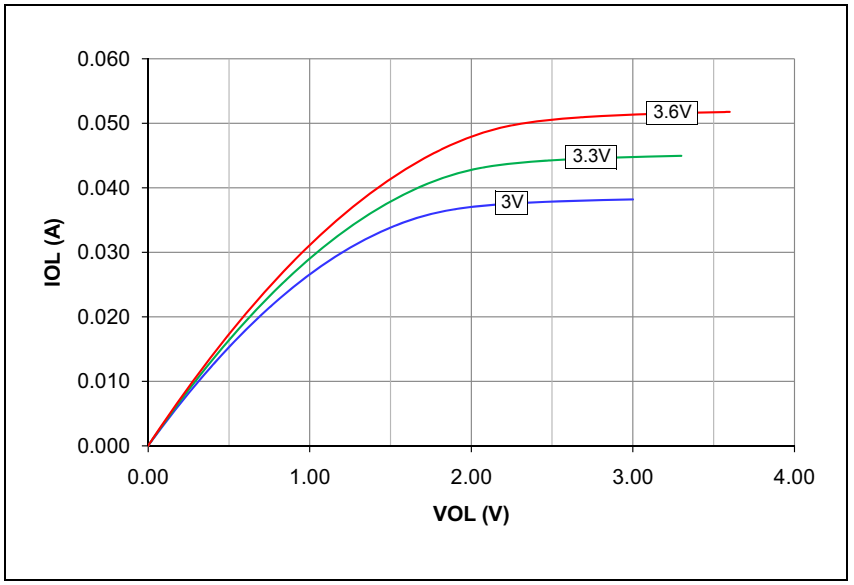

FIGURE 26-8: VOL – 16x DRIVER PINS

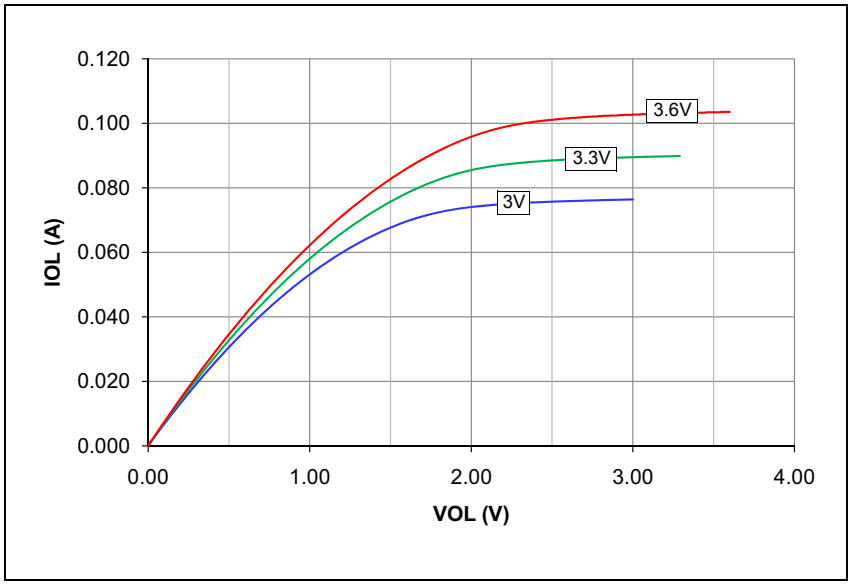

© 2007-2012 Microchip Technology Inc.

FIGURE 26-9: TYPICAL IPD CURRENT @ VDD = 3.3V, +85ºC

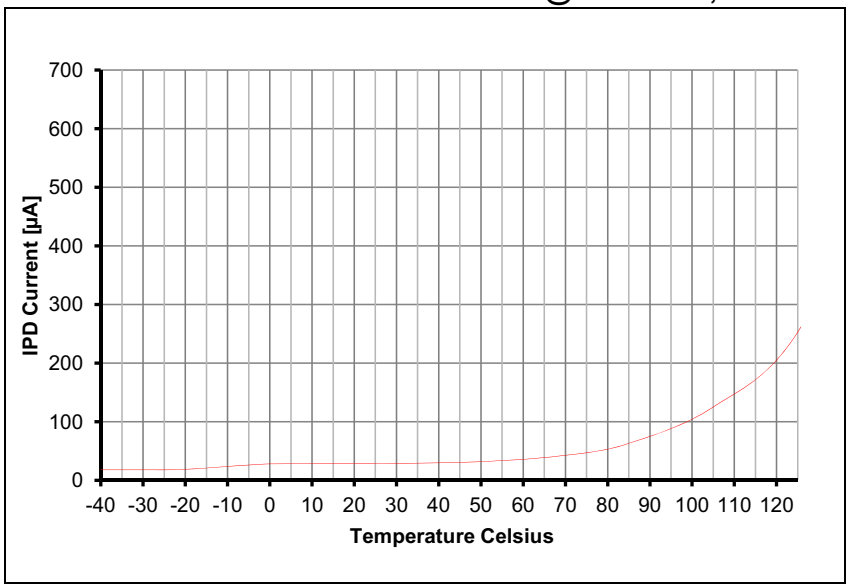

FIGURE 26-10: TYPICAL IDD CURRENT @ VDD = 3.3V, +85ºC

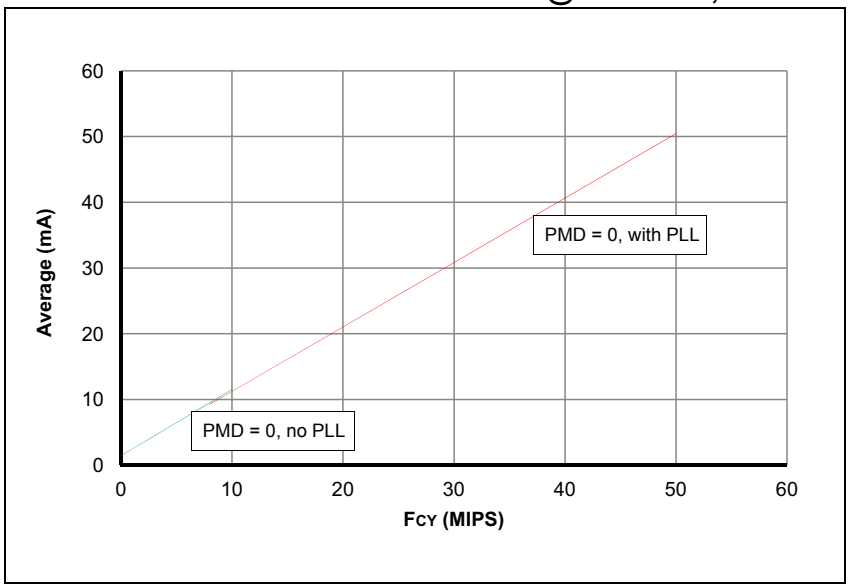

FIGURE 26-11: TYPICAL IDOZE CURRENT @ VDD = 3.3V, +85ºC

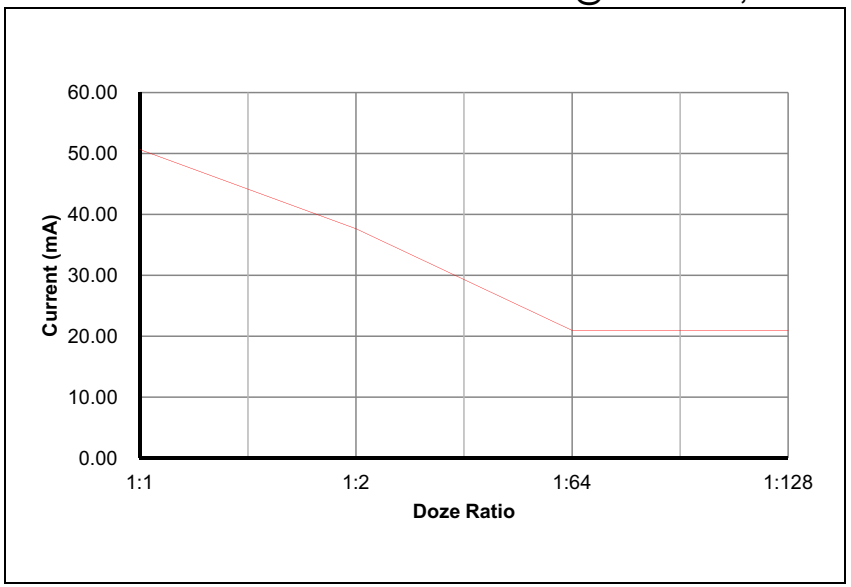

FIGURE 26-12: TYPICAL IIDLE CURRENT @ VDD = 3.3V, +85ºC

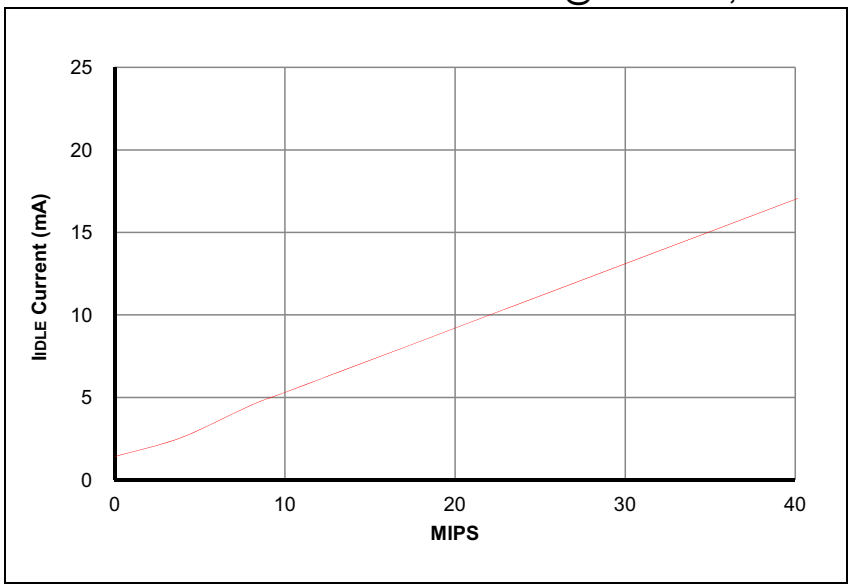

© 2007-2012 Microchip Technology Inc.

FIGURE 26-13: TYPICAL FRC FREQUENCY @ VDD = 3.3V

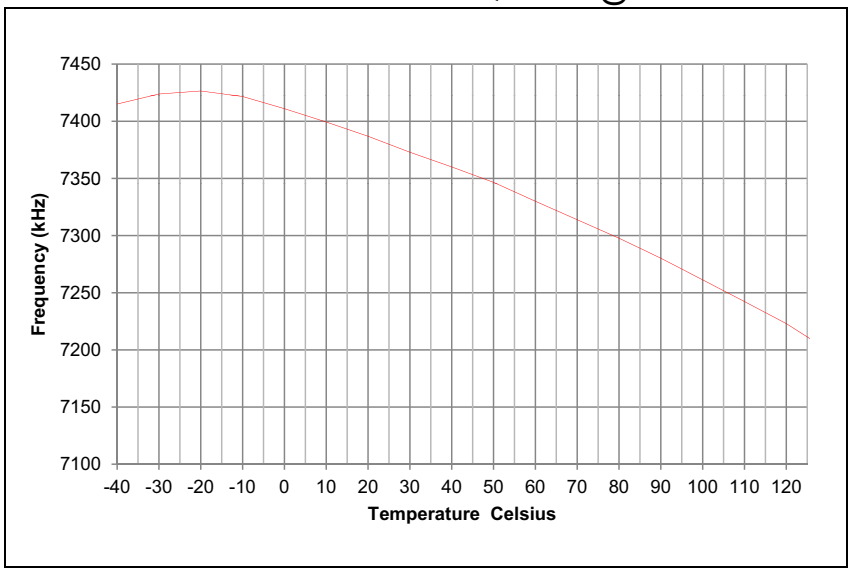

FIGURE 26-14: TYPICAL LPRC FREQUENCY @ VDD = 3.3V

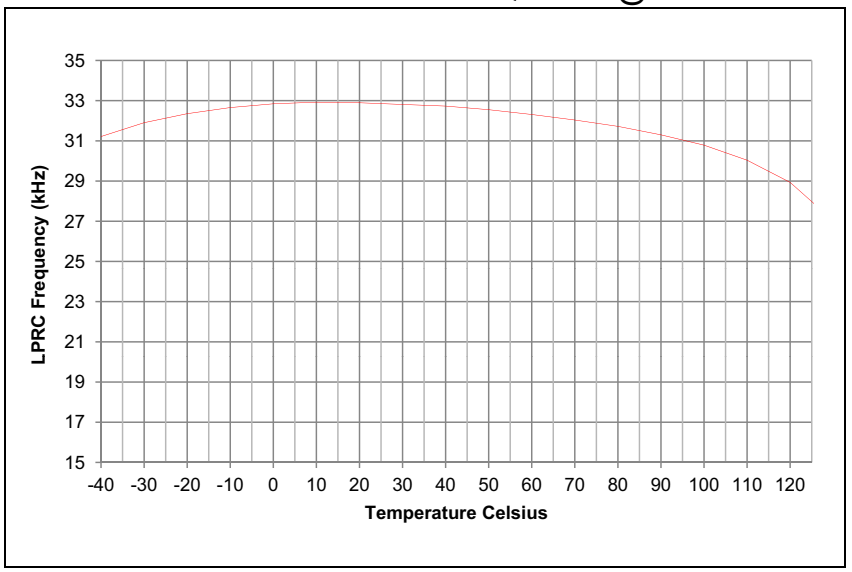

© 2007-2012 Microchip Technology Inc.

27.0 PACKAGING INFORMATION

27.1 Package Marking Information

28-Lead SPDIP

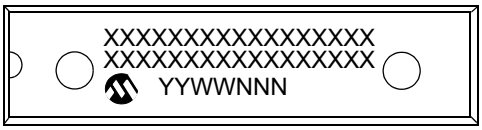

Example

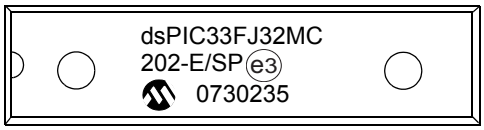

28-Lead SOIC

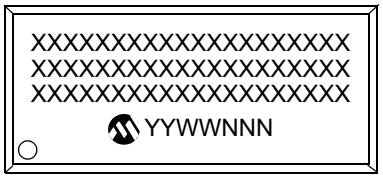

Example

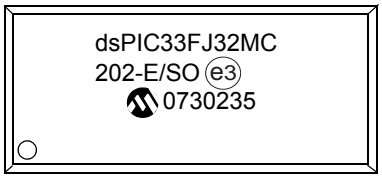

28-Lead SSOP



Example

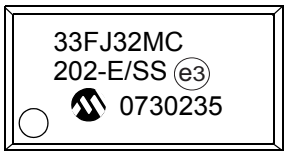

Legend:	XX...X	Customer-specific information
	Y	Year code (last digit of calendar year)
	YY	Year code (last 2 digits of calendar year)
	WW	Week code (week of January 1 is week ‘01’)
	NNN	Alphanumeric traceability code
	(e3)	Pb-free JEDEC designator for Matte Tin (Sn)
	*	This package is Pb-free. The Pb-free JEDEC designator ((e3)) can be found on the outer packaging for this package.

Note: If the full Microchip part number cannot be marked on one line, it is carried over to the next line, thus limiting the number of available characters for customer-specific information.

27.1 Package Marking Information (Continued)

28-Lead QFN-S

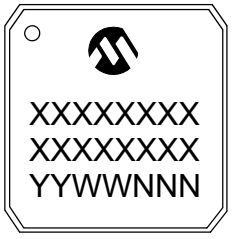

Example



44-Lead QFN

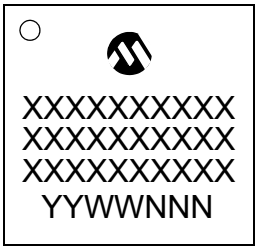

Example

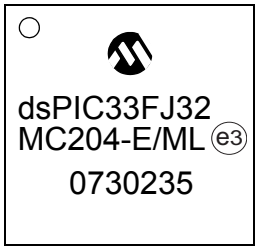

44-Lead TQFP

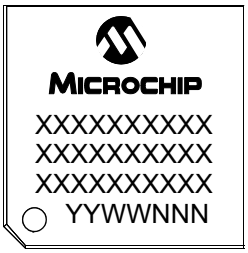

Example

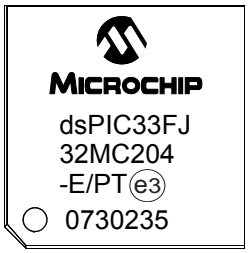

Legend:	XX...X	Customer-specific information
	Y	Year code (last digit of calendar year)
	YY	Year code (last 2 digits of calendar year)
	WW	Week code (week of January 1 is week '01')
	NNN	Alphanumeric traceability code
	(e3)	Pb-free JEDEC designator for Matte Tin (Sn)
	*	This package is Pb-free. The Pb-free JEDEC designator ((e3)) can be found on the outer packaging for this package.

Note: If the full Microchip part number cannot be marked on one line, it is carried over to the next line, thus limiting the number of available characters for customer-specific information.

© 2007-2012 Microchip Technology Inc.

27.2 Package Details

28-Lead Skinny Plastic Dual In-Line (SP) – 300 mil Body [SPDIP]

Note: For the most current package drawings, please see the Microchip Packaging Specification located at http://www.microchip.com/packaging

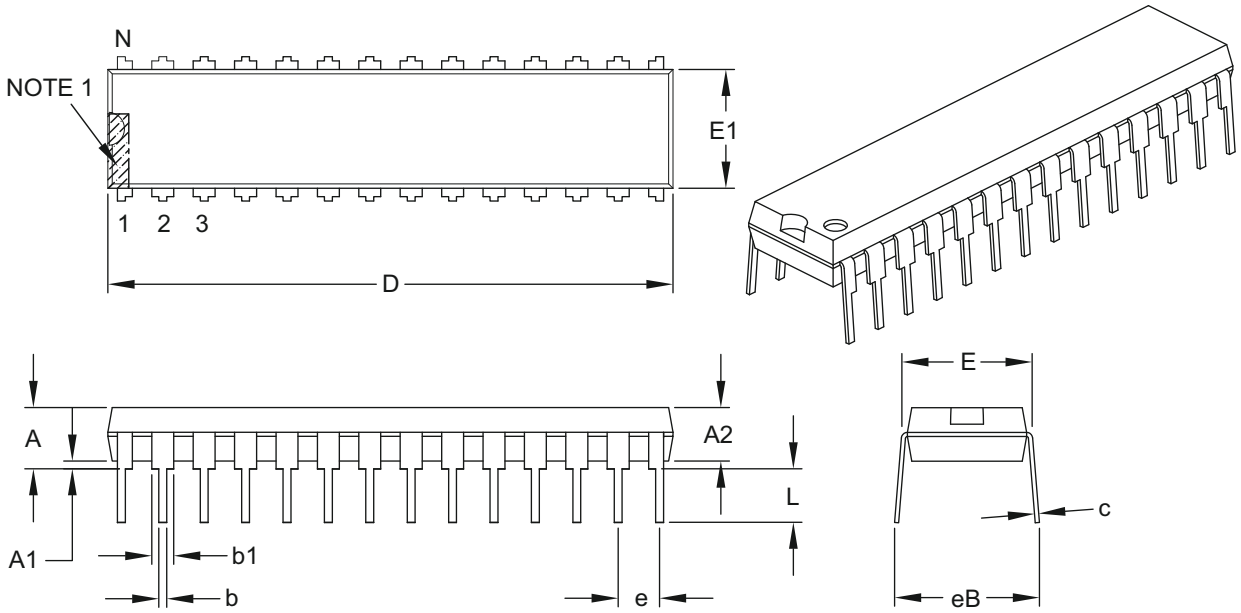

Units		INCHES		
Dimension Limits		MIN	NOM	MAX
Number of Pins	N		28	
Pitch	e		.100 BSC	
Top to Seating Plane	A	–	–	.200
Molded Package Thickness	A2	.120	.135	.150
Base to Seating Plane	A1	.015	–	–
Shoulder to Shoulder Width	E	.290	.310	.335
Molded Package Width	E1	.240	.285	.295
Overall Length	D	1.345	1.365	1.400
Tip to Seating Plane	L	.110	.130	.150
Lead Thickness	c	.008	.010	.015
Upper Lead Width	b1	.040	.050	.070
Lower Lead Width	b	.014	.018	.022
Overall Row Spacing §	eB	–	–	.430

Notes:

1. Pin 1 visual index feature may vary, but must be located within the hatched area.
2. § Significant Characteristic.
3. Dimensions D and E1 do not include mold flash or protrusions. Mold flash or protrusions shall not exceed .010" per side.
4. Dimensioning and tolerancing per ASME Y14.5M.

   BSC: Basic Dimension. Theoretically exact value shown without tolerances.

Microchip Technology Drawing C04-070B

28-Lead Plastic Small Outline (SO) - Wide, 7.50 mm Body [SOIC]

Note: For the most current package drawings, please see the Microchip Packaging Specification located at http://www.microchip.com/packaging

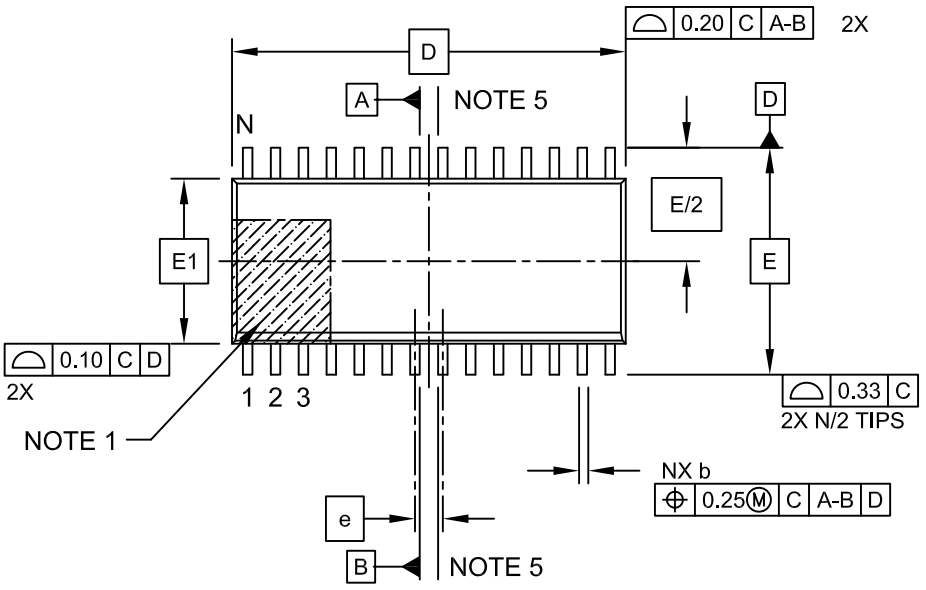

TOP VIEW

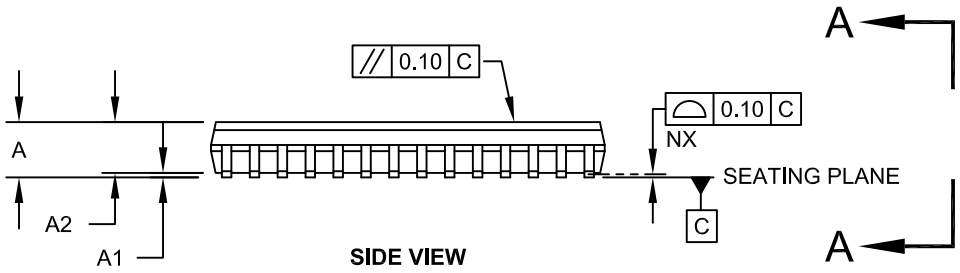

SIDE VIEW

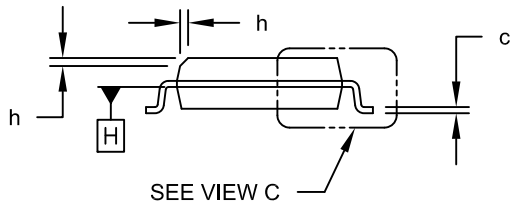

VIEW A-A

Microchip Technology Drawing C04-052C Sheet 1 of 2

© 2007-2012 Microchip Technology Inc.

28-Lead Plastic Small Outline (SO) - Wide, 7.50 mm Body [SOIC]

Note: For the most current package drawings, please see the Microchip Packaging Specification located at http://www.microchip.com/packaging

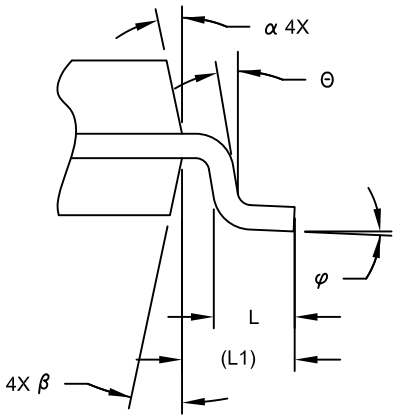

VIEW C

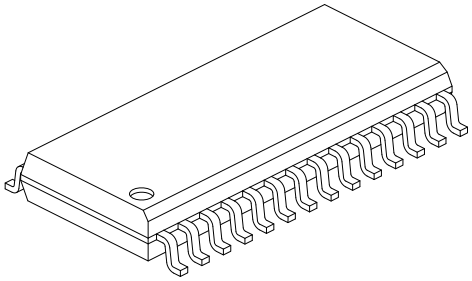

Units		MILLIMETERS		
Dimension Limits		MIN	NOM	MAX
Number of Pins	N		28	
Pitch	e		1.27 BSC	
Overall Height	A	-	-	2.65
Molded Package Thickness	A2	2.05	-	-
Standoff §	A1	0.10	-	0.30
Overall Width	E		10.30 BSC	
Molded Package Width	E1		7.50 BSC	
Overall Length	D		17.90 BSC	
Chamfer (Optional)	h	0.25	-	0.75
Foot Length	L	0.40	-	1.27
Footprint	L1		1.40 REF	
Lead Angle	Θ	0°	-	-
Foot Angle	φ	0°	-	8°
Lead Thickness	c	0.18	-	0.33
Lead Width	b	0.31	-	0.51
Mold Draft Angle Top	α	5°	-	15°
Mold Draft Angle Bottom	β	5°	-	15°

Notes:

1. Pin 1 visual index feature may vary, but must be located within the hatched area.
2. § Significant Characteristic
3. Dimension D does not include mold flash, protrusions or gate burrs, which shall not exceed 0.15 mm per end. Dimension E1 does not include interlead flash or protrusion, which shall not exceed 0.25 mm per side.
4. Dimensioning and tolerancing per ASME Y14.5M

   BSC: Basic Dimension. Theoretically exact value shown without tolerances.

   REF: Reference Dimension, usually without tolerance, for information purposes only.
5. Datums A & B to be determined at Datum H.

Microchip Technology Drawing C04-052C Sheet 2 of 2

28-Lead Plastic Small Outline (SO) - Wide, 7.50 mm Body [SOIC]

Note: For the most current package drawings, please see the Microchip Packaging Specification located at http://www.microchip.com/packaging

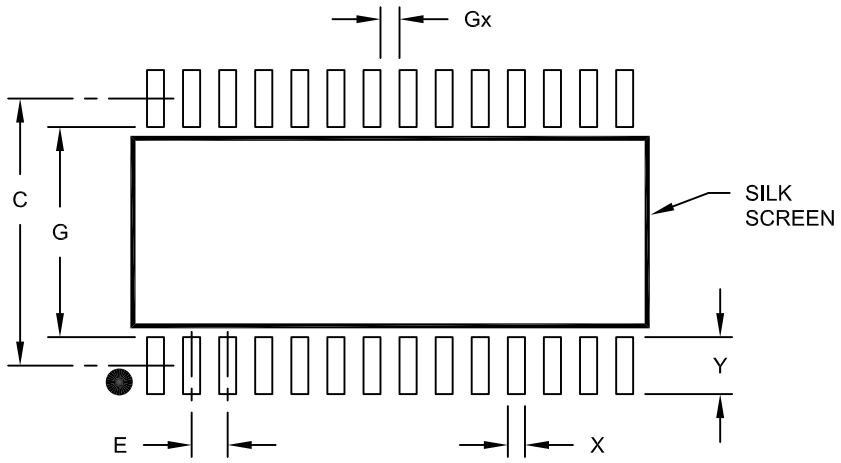

RECOMMENDED LAND PATTERN

Units		MILLIMETERS		
Dimension Limits		MIN	NOM	MAX
Contact Pitch	E		1.27 BSC	
Contact Pad Spacing	C		9.40	
Contact Pad Width (X28)	X			0.60
Contact Pad Length (X28)	Y			2.00
Distance Between Pads	Gx	0.67		
Distance Between Pads	G	7.40		

Notes:

1. Dimensioning and tolerancing per ASME Y14.5M

BSC: Basic Dimension. Theoretically exact value shown without tolerances.

Microchip Technology Drawing No. C04-2052A

© 2007-2012 Microchip Technology Inc.

28-Lead Plastic Shrink Small Outline (SS) – 5.30 mm Body [SSOP]

Note: For the most current package drawings, please see the Microchip Packaging Specification located at http://www.microchip.com/packaging

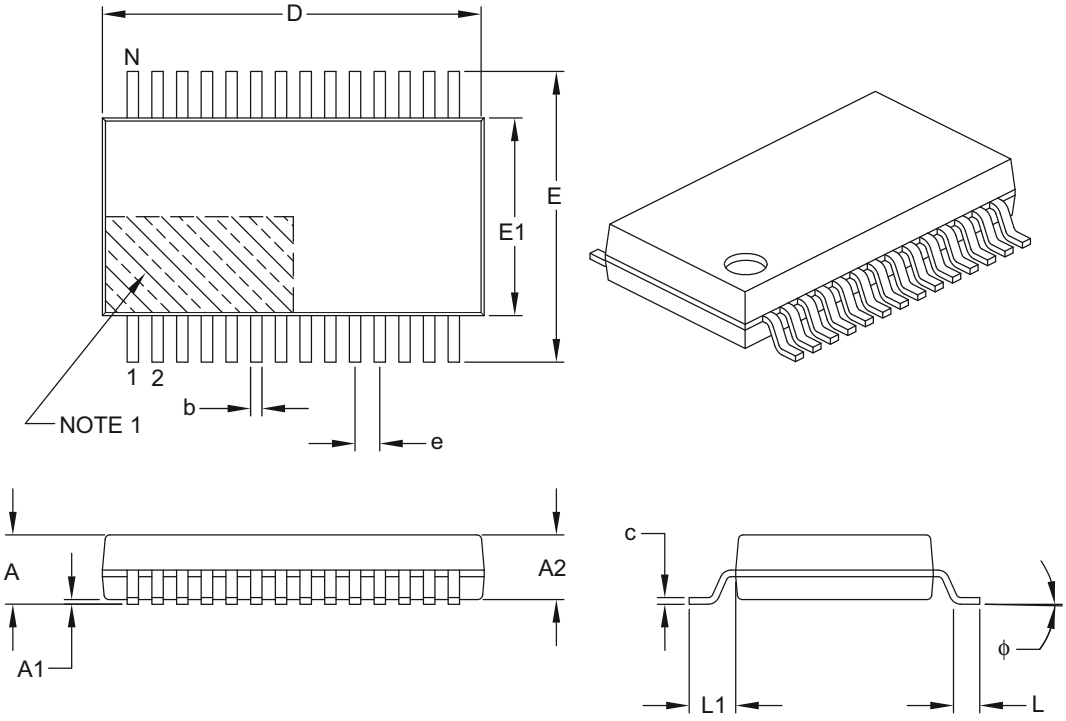

Units		MILLIMETERS		
Dimension Limits		MIN	NOM	MAX
Number of Pins	N		28	
Pitch	e		0.65 BSC	
Overall Height	A	–	–	2.00
Molded Package Thickness	A2	1.65	1.75	1.85
Standoff	A1	0.05	–	–
Overall Width	E	7.40	7.80	8.20
Molded Package Width	E1	5.00	5.30	5.60
Overall Length	D	9.90	10.20	10.50
Foot Length	L	0.55	0.75	0.95
Footprint	L1		1.25 REF	
Lead Thickness	c	0.09	–	0.25
Foot Angle	ϕ	0°	4°	8°
Lead Width	b	0.22	–	0.38

Notes:

1. Pin 1 visual index feature may vary, but must be located within the hatched area.
2. Dimensions D and E1 do not include mold flash or protrusions. Mold flash or protrusions shall not exceed 0.20 mm per side.
3. Dimensioning and tolerancing per ASME Y14.5M.

   BSC: Basic Dimension. Theoretically exact value shown without tolerances.

   REF: Reference Dimension, usually without tolerance, for information purposes only.

Microchip Technology Drawing C04-073B

28-Lead Plastic Shrink Small Outline (SS) - 5.30 mm Body [SSOP]

Note: For the most current package drawings, please see the Microchip Packaging Specification located at http://www.microchip.com/packaging

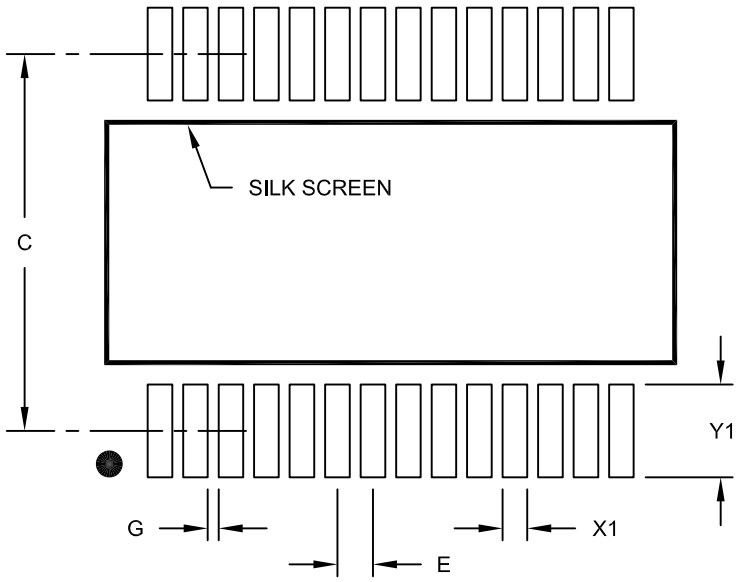

RECOMMENDED LAND PATTERN

Units		MILLIMETERS		
Dimension Limits		MIN	NOM	MAX
Contact Pitch	E	0.65 BSC		
Contact Pad Spacing	C		7.20	
Contact Pad Width (X28)	X1			0.45
Contact Pad Length (X28)	Y1			1.75
Distance Between Pads	G	0.20		

Notes:

1. Dimensioning and tolerancing per ASME Y14.5M

BSC: Basic Dimension. Theoretically exact value shown without tolerances.

Microchip Technology Drawing No. C04-2073A

© 2007-2012 Microchip Technology Inc.

28-Lead Plastic Quad Flat, No Lead Package (MM) – 6x6x0.9 mm Body [QFN-S] with 0.40 mm Contact Length

Note: For the most current package drawings, please see the Microchip Packaging Specification located at http://www.microchip.com/packaging

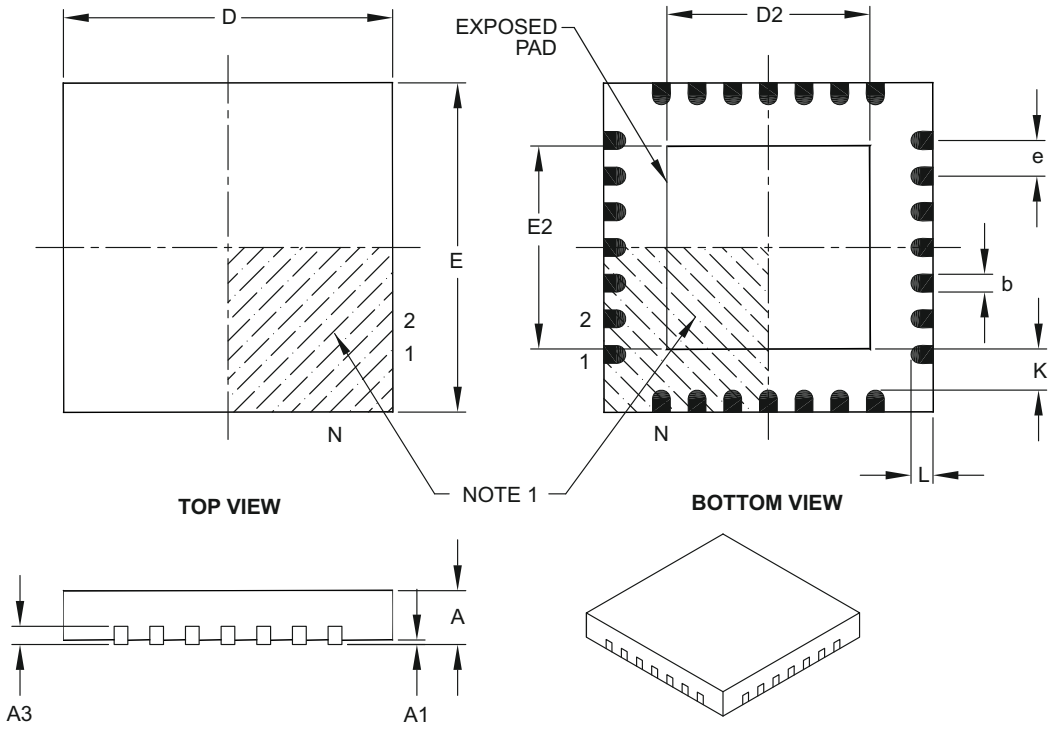

Units		MILLIMETERS		
Dimension Limits		MIN	NOM	MAX
Number of Pins	N		28	
Pitch	e		0.65 BSC	
Overall Height	A	0.80	0.90	1.00
Standoff	A1	0.00	0.02	0.05
Contact Thickness	A3		0.20 REF	
Overall Width	E		6.00 BSC	
Exposed Pad Width	E2	3.65	3.70	4.70
Overall Length	D		6.00 BSC	
Exposed Pad Length	D2	3.65	3.70	4.70
Contact Width	b	0.23	0.38	0.43
Contact Length	L	0.30	0.40	0.50
Contact-to-Exposed Pad	K	0.20	–	–

Notes:

1. Pin 1 visual index feature may vary, but must be located within the hatched area.
2. Package is saw singulated.
3. Dimensioning and tolerancing per ASME Y14.5M.

BSC: Basic Dimension. Theoretically exact value shown without tolerances.
REF: Reference Dimension, usually without tolerance, for information purposes only.

Microchip Technology Drawing C04-124B

28-Lead Plastic Quad Flat, No Lead Package (MM) – 6x6x0.9 mm Body [QFN-S] with 0.40 mm Contact Length

Note: For the most current package drawings, please see the Microchip Packaging Specification located at http://www.microchip.com/packaging

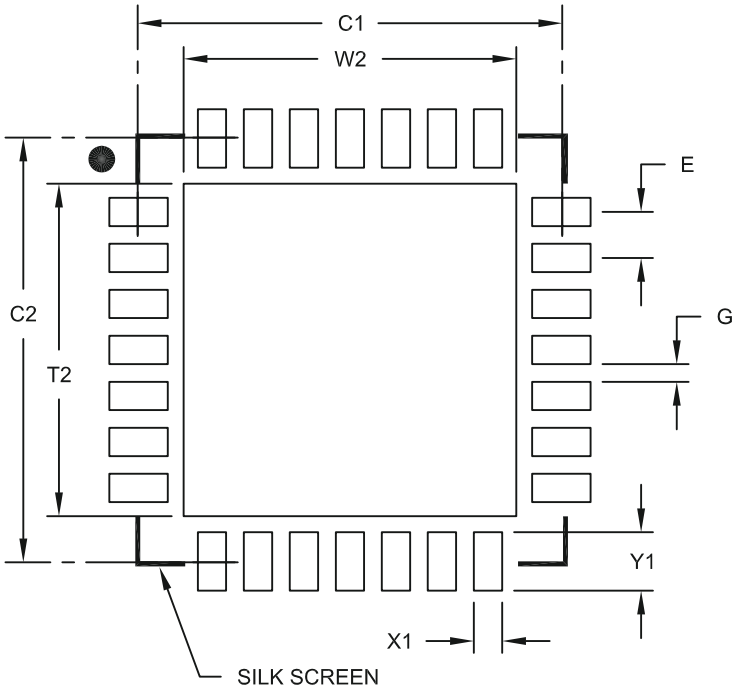

RECOMMENDED LAND PATTERN

Units		MILLIMETERS		
Dimension Limits		MIN	NOM	MAX
Contact Pitch	E		0.65 BSC	
Optional Center Pad Width	W2			4.70
Optional Center Pad Length	T2			4.70
Contact Pad Spacing	C1		6.00	
Contact Pad Spacing	C2		6.00	
Contact Pad Width (X28)	X1			0.40
Contact Pad Length (X28)	Y1			0.85
Distance Between Pads	G	0.25		

Notes:

1. Dimensioning and tolerancing per ASME Y14.5M

BSC: Basic Dimension. Theoretically exact value shown without tolerances.

Microchip Technology Drawing No. C04-2124A

© 2007-2012 Microchip Technology Inc.

44-Lead Plastic Quad Flat, No Lead Package (ML) – 8x8 mm Body [QFN]

Note: For the most current package drawings, please see the Microchip Packaging Specification located at http://www.microchip.com/packaging

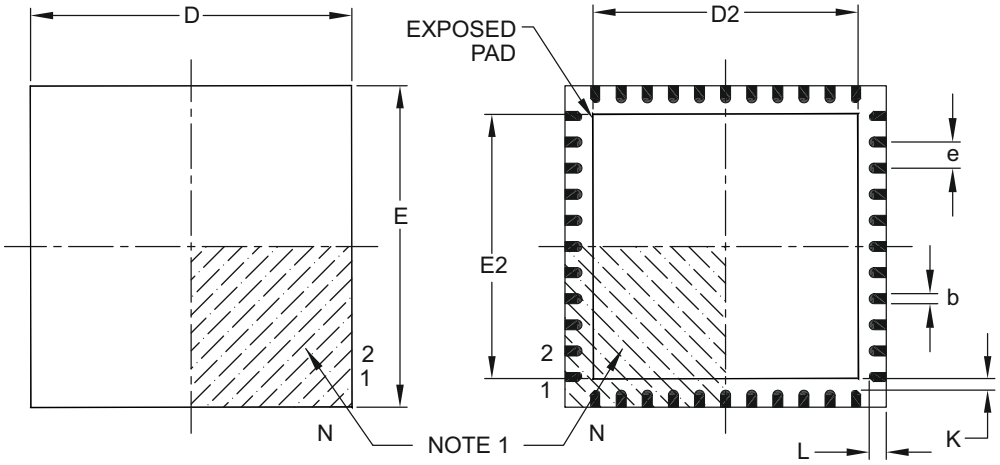

TOP VIEW **BOTTOM VIEW**

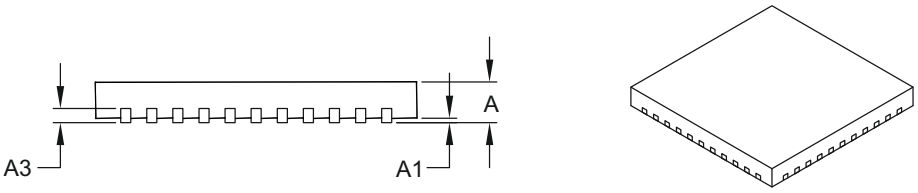

Units		MILLIMETERS		
Dimension Limits		MIN	NOM	MAX
Number of Pins	N		44	
Pitch	e		0.65 BSC	
Overall Height	A	0.80	0.90	1.00
Standoff	A1	0.00	0.02	0.05
Contact Thickness	A3		0.20 REF	
Overall Width	E		8.00 BSC	
Exposed Pad Width	E2	6.30	6.45	6.80
Overall Length	D		8.00 BSC	
Exposed Pad Length	D2	6.30	6.45	6.80
Contact Width	b	0.25	0.30	0.38
Contact Length	L	0.30	0.40	0.50
Contact-to-Exposed Pad	K	0.20	–	–

Notes:

1. Pin 1 visual index feature may vary, but must be located within the hatched area.
2. Package is saw singulated.
3. Dimensioning and tolerancing per ASME Y14.5M.

BSC: Basic Dimension. Theoretically exact value shown without tolerances.
REF: Reference Dimension, usually without tolerance, for information purposes only.

Microchip Technology Drawing C04-103B

44-Lead Plastic Quad Flat, No Lead Package (ML) – 8x8 mm Body [QFN]

Note: For the most current package drawings, please see the Microchip Packaging Specification located at http://www.microchip.com/packaging

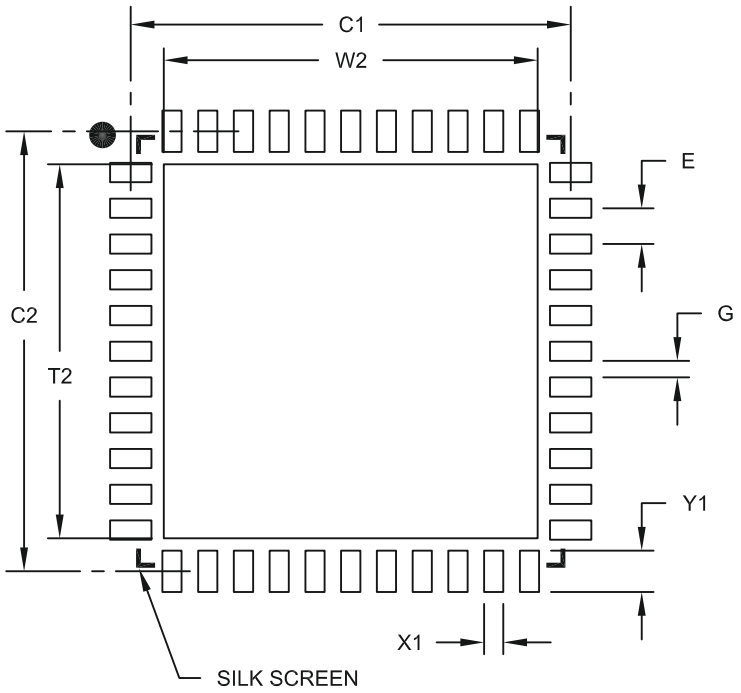

RECOMMENDED LAND PATTERN

Units		MILLIMETERS		
Dimension Limits		MIN	NOM	MAX
Contact Pitch	E		0.65 BSC	
Optional Center Pad Width	W2			6.80
Optional Center Pad Length	T2			6.80
Contact Pad Spacing	C1		8.00	
Contact Pad Spacing	C2		8.00	
Contact Pad Width (X44)	X1			0.35
Contact Pad Length (X44)	Y1			0.80
Distance Between Pads	G	0.25		

Notes:

1. Dimensioning and tolerancing per ASME Y14.5M

BSC: Basic Dimension. Theoretically exact value shown without tolerances.

Microchip Technology Drawing No. C04-2103A

© 2007-2012 Microchip Technology Inc.

44-Lead Plastic Thin Quad Flatpack (PT) – 10x10x1 mm Body, 2.00 mm Footprint [TQFP]

Note: For the most current package drawings, please see the Microchip Packaging Specification located at http://www.microchip.com/packaging

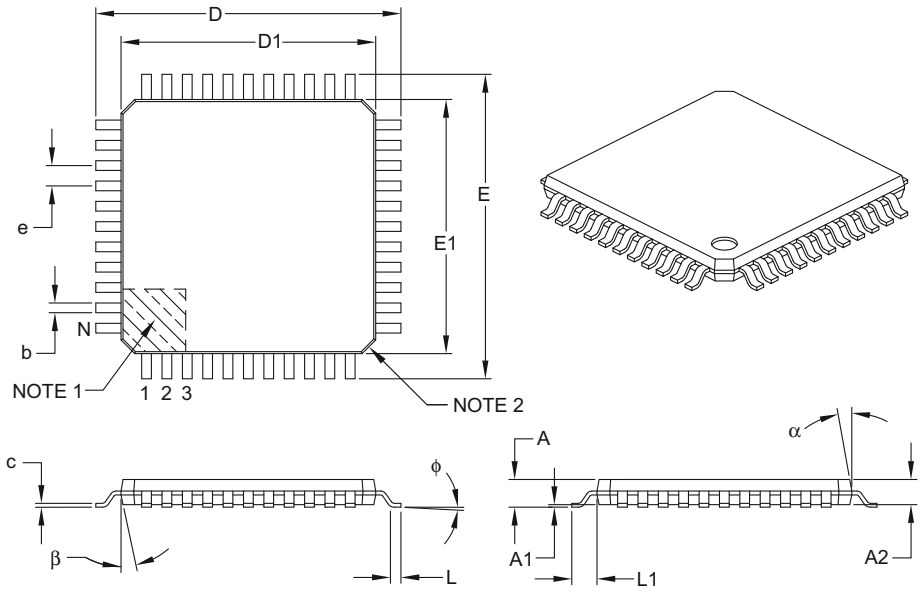

Units		MILLIMETERS		
Dimension Limits		MIN	NOM	MAX
Number of Leads	N		44	
Lead Pitch	e		0.80 BSC	
Overall Height	A	–	–	1.20
Molded Package Thickness	A2	0.95	1.00	1.05
Standoff	A1	0.05	–	0.15
Foot Length	L	0.45	0.60	0.75
Footprint	L1		1.00 REF	
Foot Angle	ϕ	0°	3.5°	7°
Overall Width	E		12.00 BSC	
Overall Length	D		12.00 BSC	
Molded Package Width	E1		10.00 BSC	
Molded Package Length	D1		10.00 BSC	
Lead Thickness	c	0.09	–	0.20
Lead Width	b	0.30	0.37	0.45
Mold Draft Angle Top	α	11°	12°	13°
Mold Draft Angle Bottom	β	11°	12°	13°

Notes:

1. Pin 1 visual index feature may vary, but must be located within the hatched area.
2. Chamfers at corners are optional; size may vary.
3. Dimensions D1 and E1 do not include mold flash or protrusions. Mold flash or protrusions shall not exceed 0.25 mm per side.
4. Dimensioning and tolerancing per ASME Y14.5M.

BSC: Basic Dimension. Theoretically exact value shown without tolerances.

REF: Reference Dimension, usually without tolerance, for information purposes only.

Microchip Technology Drawing C04-076B

44-Lead Plastic Thin Quad Flatpack (PT) 10X10X1 mm Body, 2.00 mm Footprint [TQFP]

Note: For the most current package drawings, please see the Microchip Packaging Specification located at http://www.microchip.com/packaging

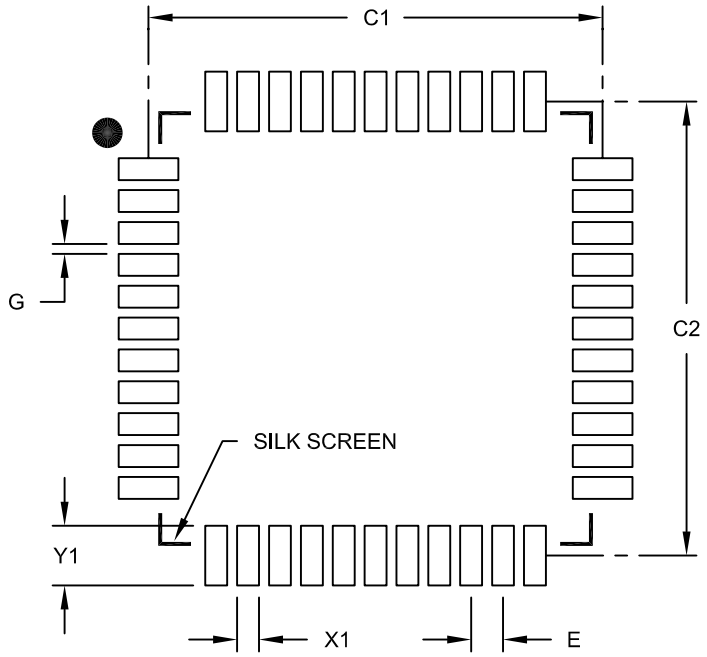

RECOMMENDED LAND PATTERN

Units		MILLIMETERS		
Dimension Limits		MIN	NOM	MAX
Contact Pitch	E		0.80 BSC	
Contact Pad Spacing	C1		11.40	
Contact Pad Spacing	C2		11.40	
Contact Pad Width (X44)	X1			0.55
Contact Pad Length (X44)	Y1			1.50
Distance Between Pads	G	0.25		

Notes:

1. Dimensioning and tolerancing per ASME Y14.5M

BSC: Basic Dimension. Theoretically exact value shown without tolerances.

Microchip Technology Drawing No. C04-2076B

© 2007-2012 Microchip Technology Inc.

APPENDIX A: REVISION HISTORY

Revision A (February 2007)

This is the initial released version of the document.

Revision B (May 2007)

This revision includes the following corrections and updates:

- Minor typographical and formatting corrections throughout the data sheet text.
- New content:
  - Addition of bullet item (16-word conversion result buffer) (see **Section 20.1 "Key Features"**)
- Updated register map information for RPINR14 and RPINR15 (see Table 4-16)
- Figure updates:
  - Updated Oscillator System Diagram (see Figure 8-1)
  - Updated WDT Block Diagram (see Figure 21-2)
- Equation update:
  - Serial Clock Rate (see Equation 17-1)
- Register updates:
  - Peripheral Pin Select Input Registers (see Register 10-1 through Register 10-13)
  - Updated ADC1 Input Channel 0 Select register (see Register 20-5)
- The following tables in **Section 24.0 "Electrical Characteristics"** have been updated with preliminary values:
  - Updated Max MIPS for -40°C to +125°C Temp Range (see Table 24-1)
  - Updated parameter DC18 (see Table 24-4)
  - Added new parameters for +125°C, and updated Typical and Max values for most parameters (see Table 24-5)
  - Added new parameters for +125°C, and updated Typical and Max values for most parameters (see Table 24-6)
  - Added new parameters for +125°C, and updated Typical and Max values for most parameters (see Table 24-7)
  - Added new parameters for +125°C, and updated Typical and Max values for most parameters (see Table 24-8)
  - Updated parameter DI51, added parameters DI51a, DI51b, and DI51c (see Table 24-9)
  - Added Note 1 (see Table 24-11)
  - Updated parameters OS10 and OS30 (see Table 24-16)
  - Updated parameter OS52 (see Table 24-17)
  - Updated parameter F20, added Note 2 (see Table 24-18)
  - Updated parameter F21 (see Table 24-19)
  - Updated parameter TA15 (see Table 24-22)
  - Updated parameter TB15 (see Table 24-23)
  - Updated parameter TC15 (see Table 24-24)
  - Updated parameter IC15 (see Table 24-26)
  - Updated parameters AD05, AD06, AD07, AD08, AD10 through AD13 and AD17; added parameters AD05a and AD06a; added Note 2; modified ADC Accuracy headings to include measurement information (see Table 24-38)
  - Separated the ADC Module Specifications table into three tables (see Table 24-38, Table 24-39, and Table 24-40)
  - Updated parameter AD50 (see Table 24-41)
  - Updated parameters AD50 and AD57 (see Table 24-42)

Revision C (June 2008)

This revision includes minor typographical and formatting changes throughout the data sheet text.

The major changes are referenced by their respective section in the following table.

TABLE A-1: MAJOR SECTION UPDATES

Section Name	Update Description
"High-Performance, 16-bit Digital Signal Controllers"	Added Extended Interrupts column to Remappable Peripherals in the Controller Families table and Note 3 (see Table 1). Added Note 1 to all pin diagrams, which references RPn pin usage by remappable peripherals (see **"Pin Diagrams"**).
Section 1.0 "Device Overview"	Changed PORTA pin name from RA15 to RA10 (see Table 1-1).
Section 4.0 "Memory Organization"	Added SFR definitions (ACCAL, ACCAH, ACCAU, ACCBL, ACCBH, and ACCBU) to the CPU Core Register Map (see Table 4-1). Updated Reset value for CORCON (see Table 4-1). Updated Reset values for the following SFRs: IPC1, IPC3-IPC5, IPC7, IPC16, and INTTREG (see Table 4-4). Updated all SFR names in QEI1 Register Map (see Table 4-10). Updated the bit range for AD1CON3 from ADCS<**5**:0> to ADCS<**7**:0>) (see Table 4-14 and Table 4-15). Updated the Reset value for CLKDIV in the System Control Register Map (see Table 4-23).
Section 6.0 "Resets"	Entire section was replaced to maintain consistency with other dsPIC33F data sheets.
Section 8.0 "Oscillator Configuration"	Removed the first sentence of the third clock source item (External Clock) in **Section 8.1.1.2 "Primary"**. Updated the default bit values for DOZE and FRCDIV in the Clock Divisor Register (see Register 8-2). Added the center frequency in the OSCTUN register for the FRC Tuning bits (TUN<5:0>) value `011111` and updated the center frequency for bits value `011110` (see Register 8-4).
Section 9.0 "Power-Saving Features"	Added the following two registers: • **PMD1: Peripheral Module Disable Control Register 1** • **PMD2: Peripheral Module Disable Control Register 2** • **PMD3: Peripheral Module Disable Control Register 3**
Section 10.0 "I/O Ports"	Added paragraph and Table 10-1 to **Section 10.2 "Open-Drain Configuration"**, which provides details on I/O pins and their functionality. Removed the following sections, which are now available in the related section of the dsPIC33F/PIC24H Family Reference Manual: • 9.4.2 "Available Peripherals" • 9.4.3.3 "Mapping" • 9.4.5 "Considerations for Peripheral Pin Selection"
Section 14.0 "Output Compare"	Replaced sections 13.1, 13.2, and 13.3 and related figures and tables with entirely new content.

© 2007-2012 Microchip Technology Inc.

TABLE A-1: MAJOR SECTION UPDATES (CONTINUED)

Section Name	Update Description
Section 15.0 "Motor Control PWM Module"	Removed the following sections, which are now available in the related section of the dsPIC33F/PIC24H Family Reference Manual: • 14.3 "PWM Time Base" • 14.4 "PWM Period" • 14.5 "Edge-Aligned PWM" • 14.6 "Center-Aligned PWM" • 14.7 "PWM Duty Cycle Comparison Units" • 14.8 "Complementary PWM Operation" • 14.9 "Dead-Time Generators" • 14.10 "Independent PWM Output" • 14.11 "Single Pulse PWM Operation" • 14.12 "PWM Output Override" • 14.13 "PWM Output and Polarity Control" • 14.14 "PWM Fault Pins" • 14.15 "PWM Update Lockout" • 14.16 "PWM Special Event Trigger" • 14.17 "PWM Operation During CPU Sleep Mode" • 14.18 "PWM Operation During CPU Idle Mode"
Section 16.0 "Quadrature Encoder Interface (QEI) Module"	Removed the following sections, which are now available in the related section of the dsPIC33F/PIC24H Family Reference Manual: • 15.1 "Quadrature Encoder Interface Logic" • 15.2 "16-bit Up/Down Position Counter Mode" • 15.3 "Position Measurement Mode" • 15.4 "Programmable Digital Noise Filters" • 15.5 "Alternate 16-bit Timer/Counter" • 15.6 QEI Module Operation During CPU Sleep Mode" • 15.7 "QEI Module Operation During CPU Idle Mode" • 15.8 "Quadrature Encoder Interface Interrupts"
Section 17.0 "Serial Peripheral Interface (SPI)"	Removed the following sections, which are now available in the related section of the dsPIC33F/PIC24H Family Reference Manual: • 16.1 "Interrupts" • 16.2 "Receive Operations" • 16.3 "Transmit Operations" • 16.4 "SPI Setup" (retained Figure 17-1: SPI Module Block Diagram)

TABLE A-1: MAJOR SECTION UPDATES (CONTINUED)

Section Name	Update Description
Section 18.0 "Inter-Integrated Circuit™ (I2C™)"	Removed the following sections, which are now available in the related section of the dsPIC33F/PIC24H Family Reference Manual: • 17.3 "I^2C Interrupts" • 17.4 "Baud Rate Generator" (retained Figure 15-1: I^2C Block Diagram) • 17.5 "I^2C Module Addresses" • 17.6 "Slave Address Masking" • 17.7 "IPMI Support" • 17.8 "General Call Address Support" • 17.9 "Automatic Clock Stretch" • 17.10 "Software Controlled Clock Stretching (STREN = 1)" • 17.11 "Slope Control" • 17.12 "Clock Arbitration" • 17.13 "Multi-Master Communication, Bus Collision, and Bus Arbitration" • 17.14 "Peripheral Pin Select Limitations"
Section 19.0 "Universal Asynchronous Receiver Transmitter (UART)"	Removed the following sections, which are now available in the related section of the dsPIC33F/PIC24H Family Reference Manual: • 18.1 "UART Baud Rate Generator" • 18.2 "Transmitting in 8-bit Data Mode" • 18.3 "Transmitting in 9-bit Data Mode" • 18.4 "Break and Sync Transmit Sequence" • 18.5 "Receiving in 8-bit or 9-bit Data Mode" • 18.6 "Flow Control Using $\overline{\text{UxCTS}}$ and $\overline{\text{UxRTS}}$ Pins" • 18.7 "Infrared Support" Removed IrDA references and Note 1, and updated the bit and bit value descriptions for UTXINV (UxSTA<14>) in the UARTx Status and Control Register (see Register 19-2).
Section 20.0 "10-bit/12-bit Analog-to-Digital Converter (ADC)"	Removed Equation 19-1: ADC Conversion Clock Period and Figure 19-2: ADC Transfer Function (10-Bit Example). Added ADC1 Module Block Diagram for dsPIC33FJ16MC304 and dsPIC33FJ32MC204 Devices (Figure 20-1) and ADC1 Module Block Diagram FOR dsPIC33FJ32MC202 Devices (Figure 20-2). Added Note 2 to Figure 20-3: ADC Conversion Clock Period Block Diagram. Updated ADC Conversion Clock Select bits in the AD1CON3 register from ADCS<**5**:0> to ADCS<**7**:0>. Any references to these bits have also been updated throughout this data sheet (Register 20-3). Added device-specific information to Note 1 in the ADC1 Input Scan Select Register Low (see Register 20-6), and updated the default bit value for bits 12-10 (CSS12-CSS10) from U-0 to R/W-0. Added device-specific information to Note 1 in the ADC1 Port Configuration Register Low (see Register 20-7), and updated the default bit value for bits 12-10 (PCFG12-PCFG10) from U-0 to R/W-0.

© 2007-2012 Microchip Technology Inc.

TABLE A-1: MAJOR SECTION UPDATES (CONTINUED)

Section Name	Update Description
Section 21.0 "Special Features"	Added FICD register information for address 0xF8000E in the Device Configuration Register Map (see Table 21-1). Added FICD register content (BKBUG, COE, JTAGEN, and ICS<1:0> to the dsPIC33FJ32MC202/204 and dsPIC33FJ16MC304 Configuration Bits Description (see Table 21-2). Added a note regarding the placement of low-ESR capacitors, after the second paragraph of **Section 21.2 "On-Chip Voltage Regulator"** and to Figure 19-1. Removed the words "if enabled" from the second sentence in the fifth paragraph of **Section 21.3 "BOR: Brown-out Reset"**.
Section 24.0 "Electrical Characteristics"	Updated Max MIPS value for -40ºC to +125ºC temperature range in Operating MIPS vs. Voltage (see Table 24-1). Removed Typ value for parameter DC12 (see Table 24-4). Updated MIPS conditions for parameters DC24c, DC44c, DC72a, DC72f and DC72g (see Table 24-5, Table 24-6, and Table 24-8). Added Note 4 (reference to new table containing digital-only and analog pin information to I/O Pin Input Specifications (see Table 24-4). Updated Typ, Min and Max values for Program Memory parameters D136, D137 and D138 (see Table 24-12). Updated Max value for Internal RC Accuracy parameter F21 for -40°C ≤TA ≤ +125°C condition and added Note 2 (see Table 24-19). Removed all values for Reset, Watchdog Timer, Oscillator Start-up Timer, and Power-up Timer parameter SY20 and updated conditions, which now refers to **Section 21.4 "Watchdog Timer (WDT)"** and LPRC parameter F21a (see Table 24-21). Updated Min and Typ values for parameters AD60, AD61, AD62 and AD63 and removed Note 3 (see Table 24-41). Updated Min and Typ values for parameters AD60, AD61, AD62 and AD63 and removed Note 3 (see Table 24-42).

Revision D (December 2008)

This revision includes minor typographical and formatting changes throughout the data sheet text.

The major changes are referenced by their respective section in the following table.

TABLE A-2: MAJOR SECTION UPDATES

Section Name	Update Description
"High-Performance, 16-bit Digital Signal Controllers"	Updated all pin diagrams to denote the pin voltage tolerance (see **"Pin Diagrams"**).
Section 2.0 "Guidelines for Getting Started with 16-bit Digital Signal Controllers"	Added new section to the data sheet that provides guidelines on getting started with 16-bit Digital Signal Controllers.
Section 10.0 "I/O Ports"	Updated 5V tolerant status for I/O pin RB4 from Yes to No (see Table 10-1).
Section 24.0 "Electrical Characteristics"	Removed the maximum value for parameter DC12 (RAM Data Retention Voltage) in Table 24-4. Updated typical values for Operating Current (I_{DD}) and added Note 3 in Table 24-5. Updated typical and maximum values for Idle Current (I_{IDLE}): Core OFF Clock ON Base Current and added Note 3 in Table 24-6. Updated typical and maximum values for Power Down Current (I_{PD}) and added Note 5 in Table 24-7. Updated typical and maximum values for Doze Current (I_{DOZE}) and added Note 2 in Table 24-8. Added Note 3 to Table 24-12. Updated minimum value for Internal Voltage Regulator Specifications in Table 24-13. Added parameter OS42 (G_M) and Notes 4, 5 and 6 to Table 24-16. Added Notes 2 and 3 to Table 24-17. Added Note 2 to Table 24-20. Added Note 2 to Table 24-21. Added Note 2 to Table 24-22. Added Note 1 to Table 24-23. Added Note 1 to Table 24-24. Added Note 3 to Table 24-36. Added Note 2 to Table 24-37. Updated typical value for parameter AD08 (ADC in operation) and added Notes 2 and 3 in Table 24-38. Updated minimum, typical, and maximum values for parameters AD23a, AD24a, AD30a, AD32a, AD32a and AD34a, and added Notes 2 and 3 in Table 24-39. Updated minimum, typical, and maximum values for parameters AD23b, AD24b, AD30b, AD32b, AD32b and AD34b, and added Notes 2 and 3 in Table 24-40.

© 2007-2012 Microchip Technology Inc.

Revision E (June 2009)

This revision includes minor typographical and formatting changes throughout the data sheet text.

Global changes include:

- Changed all instances of OSCI to OSC1 and OSCO to OSC2
- Changed all instances of PGCx/EMUCx and PGDx/EMUDx (where x = 1, 2 or 3) to PGECx and PGEDx

Changed all instances of VDDCORE and VDDCORE/VCAP to VCAP/VDDCORE

All other major changes are referenced by their respective section in the following table.

TABLE A-3: MAJOR SECTION UPDATES

Section Name	Update Description
"High-Performance, 16-bit Digital Signal Controllers"	Added Note 2 to the 28-Pin QFN-S and 44-Pin QFN pin diagrams, which references pin connections to VSS.
Section 7.0 "Interrupt Controller"	Updated addresses for interrupt vectors 80, 81, 82 and 83-125 (see Table 7-1).
Section 8.0 "Oscillator Configuration"	Updated the Oscillator System Diagram (see Figure 8-1). Added Note 1 to the Oscillator Tuning register (OSCTUN) (see Register 8-4).
Section 10.0 "I/O Ports"	Removed Table 10-1 and added reference to pin diagrams for I/O pin availability and functionality.
Section 17.0 "Serial Peripheral Interface (SPI)"	Added Note 2 to the SPIx Control Register 1 (see Register 17-2).
Section 19.0 "Universal Asynchronous Receiver Transmitter (UART)"	Updated the UTXINV bit settings in the UxSTA register and added Note 1 (see Register 19-2).
Section 24.0 "Electrical Characteristics"	Updated the Min value for parameter DC12 (RAM Retention Voltage) and added Note 4 to the DC Temperature and Voltage Specifications (see Table 24-4). Updated the Min value for parameter DI35 (see Table 24-20). Updated AD08 and added reference to Note 2 for parameters AD05a, AD06a and AD08a (see Table 24-38).

Revision F (November 2009)

The revision includes the following global update:

- Added Note 2 to the shaded table that appears at the beginning of each chapter. This new note provides information regarding the availability of registers and their associated bits

This revision also includes minor typographical and formatting changes throughout the data sheet text.

All other major changes are referenced by their respective section in the following table.

TABLE A-4: MAJOR SECTION UPDATES

Section Name	Update Description
"High-Performance, 16-bit Digital Signal Controllers"	Added information on high temperature operation (see **"Operating Range:"**).
Section 10.0 "I/O Ports"	Changed the reference to digital-only pins to 5V tolerant pins in the second paragraph of **Section 10.2 "Open-Drain Configuration"**.
Section 19.0 "Universal Asynchronous Receiver Transmitter (UART)"	Updated the two baud rate range features to: 10 Mbps to 38 bps at 40 MIPS.
Section 20.0 "10-bit/12-bit Analog-to-Digital Converter (ADC)"	Updated the ADC1 block diagrams (see Figure 20-1 and Figure 20-2).
Section 21.0 "Special Features"	Updated the second paragraph and removed the fourth paragraph in **Section 21.1 "Configuration Bits"**. Updated the Device Configuration Register Map (see Table 21-1).
Section 24.0 "Electrical Characteristics"	Updated the Absolute Maximum Ratings for high temperature and added Note 4. Updated the SPIx Module Slave Mode (CKE = 1) Timing Characteristics (see Figure 24-17). Updated the Internal RC Accuracy parameter numbers (see Table 24-18 and Table 24-19).
Section 25.0 "High Temperature Electrical Characteristics"	Added new chapter with high temperature specifications.
"Product Identification System"	Added the "H" definition for high temperature.

Revision G (November 2009)

This revision includes minor typographical and formatting changes throughout the data sheet text.

All other major changes are referenced by their respective section in the following table.

TABLE A-5: MAJOR SECTION UPDATES

Section Name	Update Description
Section 25.0 "High Temperature Electrical Characteristics"	Updated MIPS rating from 16 to 20 for high temperature devices in **"Operating Range:"** and in Table 25-1: Operating MIPS vs. Voltage.

© 2007-2012 Microchip Technology Inc.

Revision H (February 2011)

This revision includes typographical and formatting changes throughout the data sheet text. In addition, all instances of VDDCORE have been removed.

All other major changes are referenced by their respective section in the following table.

TABLE A-6: MAJOR SECTION UPDATES

Section Name	Update Description
High-Performance, 16-bit Digital Signal Controllers	Added the SSOP package information (see **"Packaging:"**, Table 1, and **"Pin Diagrams"**).
Section 2.0 "Guidelines for Getting Started with 16-bit Digital Signal Controllers"	Updated the title of **Section 2.3 "CPU Logic Filter Capacitor Connection (VCAP)"**. The frequency limitation for device PLL start-up conditions was updated in **Section 2.7 "Oscillator Value Conditions on Device Start-up"**. The second paragraph in **Section 2.9 "Unused I/Os"** was updated.
Section 3.0 "CPU"	Removed references to DMA in the CPU Core Block Diagram (see Figure 3-1).
Section 4.0 "Memory Organization"	Updated the data memory reference in the third paragraph in **Section 4.2 "Data Address Space"**. All Resets values for the following SFRs in the Timer Register Map were changed (see Table 4-5): • TMR1 • TMR2 • TMR3
Section 8.0 "Oscillator Configuration"	Added Note 3 to the OSCCON: Oscillator Control Register (see Register 8-1). Added Note 2 to the CLKDIV: Clock Divisor Register (see Register 8-2). Added Note 1 to the PLLFBD: PLL Feedback Divisor Register (see Register 8-3). Added Note 2 to the OSCTUN: FRC Oscillator Tuning Register (see Register 8-4).
Section 20.0 "10-bit/12-bit Analog-to-Digital Converter (ADC)"	Updated the VREFL references in the ADC1 module block diagrams (see Figure 20-1 and Figure 20-2).
Section 21.0 "Special Features"	Added a new paragraph and removed the third paragraph in **Section 21.1 "Configuration Bits"**. Added the column "RTSP Effects" to the Configuration Bits Descriptions (see Table 21-2).

TABLE A-6: MAJOR SECTION UPDATES (CONTINUED)

Section Name	Update Description
Section 24.0 "Electrical Characteristics"	Added the 28-pin SSOP Thermal Packaging Characteristics (see Table 24-3). Removed Note 4 from the DC Temperature and Voltage Specifications (see Table 24-4). Updated the maximum value for parameter DI19 and added parameters DI28, DI29, DI60a, DI60b, and DI60c to the I/O Pin Input Specifications (see Table 24-9). Updated Note 3 of the PLL Clock Timing Specifications (see Table 24-17). Removed Note 2 from the AC Characteristics: Internal RC Accuracy (see Table 24-18). Updated the characteristic description for parameter DI35 in the I/O Timing Requirements (see Table 24-20). Updated all SPI specifications (see Table 24-32 through Table 24-39 and Figure 24-14 through Figure 24-21). Added Note 4 to the 12-bit mode ADC Module Specifications (see Table 24-43). Added Note 4 to the 10-bit mode ADC Module Specifications (see Table 24-44).
Section 25.0 "High Temperature Electrical Characteristics"	Updated all ambient temperature and range values to +150ºC throughout the chapter. Updated the storage temperature and range to +160ºC. Updated the maximum junction temperature from +145ºC to +155ºC. Updated Note 1 in the PLL Clock Timing Specifications (see Table 25-10). Added Note 3 to the 12-bit Mode ADC Module Specifications (see Table 25-17). Added Note 3 to the 10-bit Mode ADC Module Specifications (see Table 25-18).
Section 26.0 "Packaging Information"	Added the 28-Lead SSOP package information (see **Section 26.1 "Package Marking Information"** and **Section 26.2 "Package Details"**).
"Product Identification System"	Added the "SS" definition for the SSOP package.

© 2007-2012 Microchip Technology Inc.

Revision J (July 2011)

This revision includes typographical and formatting changes throughout the data sheet text.

All other major changes are referenced by their respective section in the following table.

TABLE A-7: MAJOR SECTION UPDATES

Section Name	Update Description
Section 21.0 "Special Features"	Added Note 3 to the Connections for the On-chip Voltage Regulator diagram (see Figure 21-1).
Section 24.0 "Electrical Characteristics"	Removed Note 3 and parameter DC10 (VCORE) from the DC Temperature and Voltage Specifications (see Table 24-4). Updated the Characteristics definition and Conditions for parameter BO10 in the Electrical Characteristics: BOR (see Table 24-11). Added Note 1 to the Internal Voltage Regulator Specifications (see Table 24-13).

Revision K (June 2012)

This revision includes typographical and formatting changes throughout the data sheet text.

All other major changes are referenced by their respective section in the following table.

TABLE A-8: MAJOR SECTION UPDATES

Section Name	Update Description
Section 24.0 "Electrical Characteristics"	Added Note 1 to the Operating MIPS vs. Voltage (see Table 24-1). Updated the notes in the following tables: • Operating Current (IDD) (see Table 24-5) • Idle Current (IIDLE) (see Table 24-6) • Power-Down Current (IPD) (see Table 24-7) • Doze Current (IDOZE) (see Table 24-8) Updated the conditions for Program Memory parameters D136b, D137b, and D138b (TA = +150°C) (see Table 24-12).
Section 25.0 "High Temperature Electrical Characteristics"	Removed Table 23-8: DC Characteristics: Program Memory.
Section 26.0 "DC and AC Device Characteristics Graphs"	Added new chapter.

NOTES:

© 2007-2012 Microchip Technology Inc.

INDEX

A

AC Characteristics 244, 285
  ADC Module 288
  ADC Module (10-bit Mode) 289
  ADC Module (12-bit Mode) 288
  Internal RC Accuracy 246
  Load Conditions 244, 285
ADC
  Initialization 199
  Key Features 199
ADC Module
  ADC1 Register Map for dsPIC33FJ32MC202 40
  ADC1 Register Map for dsPIC33FJ32MC204 and dsPIC33FJ16MC304 41
Alternate Interrupt Vector Table (AIVT) 71
Analog-to-Digital Converter (ADC) 199
Arithmetic Logic Unit (ALU) 24
Assembler
  MPASM Assembler 228

B

Barrel Shifter 28
Bit-Reversed Addressing 49
  Example 50
  Implementation 49
  Sequence Table (16-Entry) 50
Block Diagrams
  16-bit Timer1 Module 143
  A/D Module 200, 201
  Connections for On-Chip Voltage Regulator 215
  Device Clock 101
  DSP Engine 25
  dsPIC33FJ32MC202/204 and dsPIC33FJ16MC304 .. 10
  dsPIC33FJ32MC202/204 and dsPIC33FJ16MC304 CPU Core 18
  dsPIC33FJ32MC202/204 and dsPIC33FJ16MC304 PLL 103
  Input Capture 151
  Output Compare 155
  PLL 103
  PWM Module 160, 161
  Quadrature Encoder Interface 173
  Reset System 61
  Shared Port Structure 117
  SPI 179
  Timer2 (16-bit) 148
  Timer2/3 (32-bit) 148
  UART 193
  Watchdog Timer (WDT) 216

C

C Compilers
  MPLAB C18 228
Clock Switching 110
  Enabling 110
  Sequence 110
Code Examples
  Erasing a Program Memory Page 59
  Initiating a Programming Sequence 60
  Loading Write Buffers 60
  Port Write/Read 118
  PWRSAV Instruction Syntax 111
Code Protection 211, 218
Configuration Bits 211
Configuration Register Map 211
Configuring Analog Port Pins 118
CPU
  Control Register 21
CPU Clocking System 102
  PLL Configuration 102
  Selection 102
  Sources 102
Customer Change Notification Service 325
Customer Notification Service 325
Customer Support 325

D

Data Accumulators and Adder/Subtracter 26
  Data Space Write Saturation 28
  Overflow and Saturation 26
  Round Logic 27
  Write Back 27
Data Address Space 31
  Alignment 31
  Memory Map for dsPIC33FJ32MC202/204 and dsPIC33FJ16MC304 Devices with 2 KBs RAM . 32
  Near Data Space 31
  Software Stack 46
  Width 31
DC and AC Characteristics
  Graphs and Tables 291
DC Characteristics 232
  Doze Current (IDOZE) 283
  High Temperature 282
  I/O Pin Input Specifications 238
  I/O Pin Output Specifications 241, 284
  Idle Current (IDOZE) 237
  Idle Current (IIDLE) 235
  Operating Current (IDD) 234
  Operating MIPS vs. Voltage 282
  Power-Down Current (IPD) 236
  Power-down Current (IPD) 283
  Program Memory 242
  Temperature and Voltage 282
  Temperature and Voltage Specifications 233
  Thermal Operating Conditions 282
Development Support 227
Doze Mode 112
DSP Engine 24
  Multiplier 26

E

Electrical Characteristics 231
  AC 244, 285
Equations
  Device Operating Frequency 102
Errata 7

F

Fail-Safe Clock Monitor 110
Flash Program Memory 55
  Control Registers 56
  Operations 56
  Programming Algorithm 59
  RTSP Operation 56
  Table Instructions 55
Flexible Configuration 211

H

High Temperature Electrical Characteristics 281

I

I/O Ports 117
  Parallel I/O (PIO) 117
  Write/Read Timing 118
I^2C
  Addresses 187
  Operating Modes 185
  Registers 187
  Software Controlled Clock Stretching (STREN = 1) .. 187
I^2C Module
  I2C1 Register Map 39
In-Circuit Debugger 217
In-Circuit Emulation 211
In-Circuit Serial Programming (ICSP) 211, 217
Input Capture 151
  Registers 153
Input Change Notification 118
Instruction Addressing Modes 46
  File Register Instructions 46
  Fundamental Modes Supported 47
  MAC Instructions 47
  MCU Instructions 46
  Move and Accumulator Instructions 47
  Other Instructions 47
Instruction Set
  Overview 222
  Summary 219
Instruction-Based Power-Saving Modes 111
  Idle 112
  Sleep 111
Interfacing Program and Data Memory Spaces 51
Internal RC Oscillator
  Use with WDT 216
Internet Address 325
Interrupt Control and Status Registers 74
  IECx 74
  IFSx 74
  INTCON1 74
  INTCON2 74
  IPCx 74
Interrupt Setup Procedures 100
  Initialization 100
  Interrupt Disable 100
  Interrupt Service Routine 100
  Trap Service Routine 100
Interrupt Vector Table (IVT) 71
Interrupts Coincident with Power Save Instructions 112

J

JTAG Boundary Scan Interface 211
JTAG Interface 217

M

Memory Organization 29
Microchip Internet Web Site 325
Modulo Addressing 48
  Applicability 49
  Operation Example 48
  Start and End Address 48
  W Address Register Selection 48
Motor Control PWM 159
Motor Control PWM Module
  2-Output Register Map 38
  6-Output Register Map for dsPIC33FJ12MC202 38
MPLAB ASM30 Assembler, Linker, Librarian 228
MPLAB Integrated Development Environment Software .. 227
MPLAB PM3 Device Programmer 230
MPLAB REAL ICE In-Circuit Emulator System 229
MPLINK Object Linker/MPLIB Object Librarian 228

N

NVM Module
  Register Map 45

O

Open-Drain Configuration 118
Oscillator Configuration 101
Output Compare 155

P

Packaging 295
  Details 297
  Marking 295, 296
Peripheral Module Disable (PMD) 112
Pinout I/O Descriptions (table) 11
PMD Module
  Register Map 45
PORTA
  Register Map for dsPIC33FJ32MC202 43
  Register Map for dsPIC33FJ32MC204 and dsPIC33FJ16MC304 43
PORTB
  Register Map 44
PORTC
  Register Map dsPIC33FJ32MC204 and dsPIC33FJ16MC304 44
Power-on Reset (POR) 67
Power-Saving Features 111
  Clock Frequency and Switching 111
Program Address Space 29
  Construction 51
  Data Access from Program Memory Using Program Space Visibility 54
  Data Access from Program Memory Using Table Instructions 53
  Data Access from, Address Generation 52
  Memory Map 29
  Table Read Instructions
    TBLRDH 53
    TBLRDL 53
  Visibility Operation 54
Program Memory
  Interrupt Vector 30
  Organization 30
  Reset Vector 30
PWM Time Base 163

Q

Quadrature Encoder Interface (QEI) 173
Quadrature Encoder Interface (QEI) Module
  Register Map 39

R

Reader Response 326
Registers
  AD1CHS0 (ADC1 Input Channel 0 Select 209
  AD1CHS123 (ADC1 Input Channel 1, 2, 3 Select) ... 207
  AD1CON1 (ADC1 Control 1) 203
  AD1CON2 (ADC1 Control 2) 205
  AD1CON3 (ADC1 Control 3) 206

© 2007-2012 Microchip Technology Inc.

AD1CSSL (ADC1 Input Scan Select Low) 210
AD1PCFGL (ADC1 Port Configuration Low) 210
CLKDIV (Clock Divisor) 107
CORCON (Core Control) 23, 75
DFLTCON (QEI Control) 177
I2CxCON (I2Cx Control) 188
I2CxMSK (I2Cx Slave Mode Address Mask) 192
I2CxSTAT (I2Cx Status) 190
ICxCON (Input Capture x Control) 153
IEC0 (Interrupt Enable Control 0) 84
IEC1 (Interrupt Enable Control 1) 86
IEC3 (Interrupt Enable Control 3) 87
IEC4 (Interrupt Enable Control 4) 88
IFS0 (Interrupt Flag Status 0) 79
IFS1 (Interrupt Flag Status 1) 81
IFS3 (Interrupt Flag Status 3) 82
IFS4 (Interrupt Flag Status 4) 83
INTCON1 (Interrupt Control 1) 76
INTCON2 (Interrupt Control 2) 78
INTTREG Interrupt Control and Status Register 99
IPC0 (Interrupt Priority Control 0) 89
IPC1 (Interrupt Priority Control 1) 90
IPC14 (Interrupt Priority Control 14) 96
IPC15 (Interrupt Priority Control 15) 97
IPC16 (Interrupt Priority Control 16) 97
IPC18 (Interrupt Priority Control 18) 98
IPC2 (Interrupt Priority Control 2) 91
IPC3 (Interrupt Priority Control 3) 92
IPC4 (Interrupt Priority Control 4) 93
IPC5 (Interrupt Priority Control 5) 94
IPC7 (Interrupt Priority Control 7) 95
NVMCON (Flash Memory Control) 57
NVMKEY (Nonvolatile Memory Key) 58
OCxCON (Output Compare x Control) 158
OSCCON (Oscillator Control) 105
OSCTUN (FRC Oscillator Tuning) 109
P1DC2 (PWM Duty Cycle 2) 172
P1DC3 (PWM Duty Cycle 3) 172
PDC1 (PWM Duty Cycle 1) 172
PLLFBD (PLL Feedback Divisor) 108
PMD1 (Peripheral Module Disable Control Register 1) 114
PMD1 (Peripheral Module Disable Control Register 1) .. 114
PMD2 (Peripheral Module Disable Control Register 2) 115
PMD3 (Peripheral Module Disable Control Register 3) 116
PMD3 (Peripheral Module Disable Control Register 3) .. 116
PTCON (PWM Time Base Control) 163
PTMR (PWM Timer Count Value) 164
PTPER (PWM Time Base Period) 164
PWMxCON1 (PWM Control 1) 166
PWMxCON2 (PWM Control 2) 167
PxDTCON1 (Dead-Time Control 1) 168
PxDTCON2 (Dead-Time Control 2) 169
PxFLTACON (Fault A Control) 170
PxOVDCON (Override Control) 171
PxSECMP (Special Event Compare) 165
QEICON (QEI Control) 175
RCON (Reset Control) 63
SPIxCON1 (SPIx Control 1) 182
SPIxCON2 (SPIx Control 2) 184
SPIxSTAT (SPIx Status and Control) 181
SR (CPU Status) 21, 75
T1CON (Timer1 Control) 145
T2CON Control) 149
T3CON Control 150
UxMODE (UARTx Mode) 195
UxSTA (UARTx Status and Control) 197
Reset
Illegal Opcode 61, 69
Trap Conflict 68, 69
Uninitialized W Register 61, 69
Reset Sequence 71
Resets 61

S

Serial Peripheral Interface (SPI) 179
Software Reset Instruction (SWR) 68
Software Simulator (MPLAB SIM) 229
Software Stack Pointer, Frame Pointer
CALLL Stack Frame 46
Special Features of the CPU 211
SPI Module
SPI1 Register Map 39
Symbols Used in Opcode Descriptions 220
System Control
Register Map 44

T

Temperature and Voltage Specifications
AC 244, 285
Timer1 143
Timer2/3 147
Timing Characteristics
CLKO and I/O 247
Timing Diagrams
10-bit ADC Conversion (CHPS<1:0> = 01, SIMSAM = 0, ASAM = 0, SSRC<2:0> = 000) 278
10-bit ADC Conversion (CHPS<1:0> = 01, SIMSAM = 0, ASAM = 1, SSRC<2:0> = 111, SAMC<4:0> = 00001) 278
12-bit ADC Conversion (ASAM = 0, SSRC<2:0> = 000) 277
Brown-out Situations 68
External Clock 245
I2Cx Bus Data (Master Mode) 270
I2Cx Bus Data (Slave Mode) 272
I2Cx Bus Start/Stop Bits (Master Mode) 270
I2Cx Bus Start/Stop Bits (Slave Mode) 272
Input Capture (CAPx) 253
Motor Control PWM 255
Motor Control PWM Fault 255
OC/PWM 254
Output Compare (OCx) 253
QEA/QEB Input 256
QEI Module Index Pulse 257
Reset, Watchdog Timer, Oscillator Start-up Timer and Power-up Timer 248
Timer1, 2, 3 External Clock 250
TimerQ (QEI Module) External Clock 252
Timing Requirements
ADC Conversion (10-bit mode) 290
ADC Conversion (12-bit Mode) 290
CLKO and I/O 247
External Clock 245
Input Capture 253
SPIx Master Mode (CKE = 0) 286
SPIx Module Master Mode (CKE = 1) 286
SPIx Module Slave Mode (CKE = 0) 287

SPIx Module Slave Mode (CKE = 1) 287
Timing Specifications
10-bit ADC Conversion Requirements 279
12-bit ADC Conversion Requirements 277
I2Cx Bus Data Requirements (Master Mode) 271
I2Cx Bus Data Requirements (Slave Mode) 273
Motor Control PWM Requirements 255
Output Compare Requirements 253
PLL Clock 246, 285
QEI External Clock Requirements 252
QEI Index Pulse Requirements 257
Quadrature Decoder Requirements 256
Reset, Watchdog Timer, Oscillator Start-up Timer, Power-up Timer and Brown-out Reset Requirements 249
Simple OC/PWM Mode Requirements 254
Timer1 External Clock Requirements 250
Timer2 External Clock Requirements 251
Timer3 External Clock Requirements 251

U

UART Module
UART1 Register Map 39
Universal Asynchronous Receiver Transmitter (UART) ... 193
Using the RCON Status Bits 69

V

Voltage Regulator (On-Chip) 215

W

Watchdog Time-out Reset (WDTR) 68
Watchdog Timer (WDT) 211, 216
Programming Considerations 216
WWW Address 325
WWW, On-Line Support 7

© 2007-2012 Microchip Technology Inc.

THE MICROCHIP WEB SITE

Microchip provides online support via our WWW site at www.microchip.com. This web site is used as a means to make files and information easily available to customers. Accessible by using your favorite Internet browser, the web site contains the following information:

- **Product Support** – Data sheets and errata, application notes and sample programs, design resources, user's guides and hardware support documents, latest software releases and archived software
- **General Technical Support** – Frequently Asked Questions (FAQs), technical support requests, online discussion groups, Microchip consultant program member listing
- **Business of Microchip** – Product selector and ordering guides, latest Microchip press releases, listing of seminars and events, listings of Microchip sales offices, distributors and factory representatives

CUSTOMER CHANGE NOTIFICATION SERVICE

Microchip's customer notification service helps keep customers current on Microchip products. Subscribers will receive e-mail notification whenever there are changes, updates, revisions or errata related to a specified product family or development tool of interest.

To register, access the Microchip web site at www.microchip.com. Under "Support", click on "Customer Change Notification" and follow the registration instructions.

CUSTOMER SUPPORT

Users of Microchip products can receive assistance through several channels:

- Distributor or Representative
- Local Sales Office
- Field Application Engineer (FAE)
- Technical Support
- Development Systems Information Line

Customers should contact their distributor, representative or field application engineer (FAE) for support. Local sales offices are also available to help customers. A listing of sales offices and locations is included in the back of this document.

Technical support is available through the web site at: http://microchip.com/support

READER RESPONSE

It is our intention to provide you with the best documentation possible to ensure successful use of your Microchip product. If you wish to provide your comments on organization, clarity, subject matter, and ways in which our documentation can better serve you, please FAX your comments to the Technical Publications Manager at (480) 792-4150.

Please list the following information, and use this outline to provide us with your comments about this document.

TO: Technical Publications Manager Total Pages Sent _____

RE: Reader Response

From: Name _____

Company _____

Address _____

City / State / ZIP / Country _____

Telephone: (_____) _____ - _____ FAX: (_____) _____ - _____

Application (optional):

Would you like a reply? ___Y ___N

Device: dsPIC33FJ32MC202/204 and dsPIC33FJ16MC304 Literature Number: DS70283K

Questions:

1. What are the best features of this document?

2. How does this document meet your hardware and software development needs?

3. Do you find the organization of this document easy to follow? If not, why?

4. What additions to the document do you think would enhance the structure and subject?

5. What deletions from the document could be made without affecting the overall usefulness?

6. Is there any incorrect or misleading information (what and where)?

7. How would you improve this document?

© 2007-2012 Microchip Technology Inc.

PRODUCT IDENTIFICATION SYSTEM

To order or obtain information, e.g., on pricing or delivery, refer to the factory or the listed sales office.

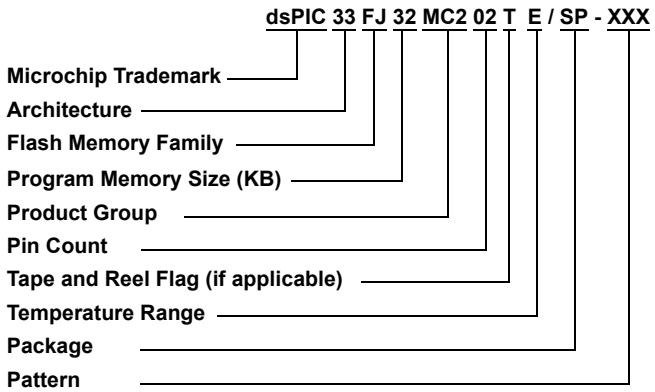

Architecture:	33	=	16-bit Digital Signal Controller
Flash Memory Family:	FJ	=	Flash program memory, 3.3V
Product Group:	MC2	=	Motor Control family
	MC3	=	Motor Control family
Pin Count:	02	=	28-pin
	04	=	44-pin
Temperature Range:	I	=	-40° C to+85° C (Industrial)
	E	=	-40° C to+125° C (Extended)
	H	=	-40° C to+150° C (High)
Package:	SP	=	Skinny Plastic Dual In-Line - 300 mil body (SPDIP)
	SO	=	Plastic Small Outline - Wide - 7.50 mil body (SOIC)
	SS	=	Plastic Shrink Small Outline - 5.3 mm body (SSOP)
	ML	=	Plastic Quad, No Lead Package - 8x8 mm body (QFN)
	PT	=	Plastic Thing Quad Flatpack - 10x10x1 mm body (TQFP)
	MM	=	Plastic Quad, No Lead Package - 6x6 mm body (QFN-S)

Examples:

a) dsPIC33FJ32MC202TE/SP:
Motor Control dsPIC33, 32 KB program memory, 28-pin, Extended temp., SPDIP package.

NOTES:

© 2007-2012 Microchip Technology Inc.

Note the following details of the code protection feature on Microchip devices:

- Microchip products meet the specification contained in their particular Microchip Data Sheet.
- Microchip believes that its family of products is one of the most secure families of its kind on the market today, when used in the intended manner and under normal conditions.
- There are dishonest and possibly illegal methods used to breach the code protection feature. All of these methods, to our knowledge, require using the Microchip products in a manner outside the operating specifications contained in Microchip's Data Sheets. Most likely, the person doing so is engaged in theft of intellectual property.
- Microchip is willing to work with the customer who is concerned about the integrity of their code.
- Neither Microchip nor any other semiconductor manufacturer can guarantee the security of their code. Code protection does not mean that we are guaranteeing the product as "unbreakable."

Code protection is constantly evolving. We at Microchip are committed to continuously improving the code protection features of our products. Attempts to break Microchip's code protection feature may be a violation of the Digital Millennium Copyright Act. If such acts allow unauthorized access to your software or other copyrighted work, you may have a right to sue for relief under that Act.

Information contained in this publication regarding device applications and the like is provided only for your convenience and may be superseded by updates. It is your responsibility to ensure that your application meets with your specifications. MICROCHIP MAKES NO REPRESENTATIONS OR WARRANTIES OF ANY KIND WHETHER EXPRESS OR IMPLIED, WRITTEN OR ORAL, STATUTORY OR OTHERWISE, RELATED TO THE INFORMATION, INCLUDING BUT NOT LIMITED TO ITS CONDITION, QUALITY, PERFORMANCE, MERCHANTABILITY OR FITNESS FOR PURPOSE**.** Microchip disclaims all liability arising from this information and its use. Use of Microchip devices in life support and/or safety applications is entirely at the buyer's risk, and the buyer agrees to defend, indemnify and hold harmless Microchip from any and all damages, claims, suits, or expenses resulting from such use. No licenses are conveyed, implicitly or otherwise, under any Microchip intellectual property rights.

Trademarks

The Microchip name and logo, the Microchip logo, dsPIC, KEELOQ, KEELOQ logo, MPLAB, PIC, PICmicro, PICSTART, PIC^{32} logo, rfPIC and UNI/O are registered trademarks of Microchip Technology Incorporated in the U.S.A. and other countries.

FilterLab, Hampshire, HI-TECH C, Linear Active Thermistor, MXDEV, MXLAB, SEEVAL and The Embedded Control Solutions Company are registered trademarks of Microchip Technology Incorporated in the U.S.A.

Analog-for-the-Digital Age, Application Maestro, chipKIT, chipKIT logo, CodeGuard, dsPICDEM, dsPICDEM.net, dsPICworks, dsSPEAK, ECAN, ECONOMONITOR, FanSense, HI-TIDE, In-Circuit Serial Programming, ICSP, Mindi, MiWi, MPASM, MPLAB Certified logo, MPLIB, MPLINK, mTouch, Omniscient Code Generation, PICC, PICC-18, PICDEM, PICDEM.net, PICkit, PICtail, REAL ICE, rfLAB, Select Mode, Total Endurance, TSHARC, UniWinDriver, WiperLock and ZENA are trademarks of Microchip Technology Incorporated in the U.S.A. and other countries.

SQTP is a service mark of Microchip Technology Incorporated in the U.S.A.

All other trademarks mentioned herein are property of their respective companies.

© 2007-2012, Microchip Technology Incorporated, Printed in the U.S.A., All Rights Reserved.

Printed on recycled paper.

ISBN: 978-1-62076-335-3

QUALITY MANAGEMENT SYSTEM
CERTIFIED BY DNV
ISO/TS 16949

Microchip received ISO/TS-16949:2009 certification for its worldwide headquarters, design and wafer fabrication facilities in Chandler and Tempe, Arizona; Gresham, Oregon and design centers in California and India. The Company's quality system processes and procedures are for its PIC® MCUs and dsPIC® DSCs, KEELOQ® code hopping devices, Serial EEPROMs, microperipherals, nonvolatile memory and analog products. In addition, Microchip's quality system for the design and manufacture of development systems is ISO 9001:2000 certified.

Worldwide Sales and Service

AMERICAS

Corporate Office
2355 West Chandler Blvd.
Chandler, AZ 85224-6199
Tel: 480-792-7200
Fax: 480-792-7277
Technical Support:
http://www.microchip.com/support
Web Address:
www.microchip.com

Atlanta
Duluth, GA
Tel: 678-957-9614
Fax: 678-957-1455

Boston
Westborough, MA
Tel: 774-760-0087
Fax: 774-760-0088

Chicago
Itasca, IL
Tel: 630-285-0071
Fax: 630-285-0075

Cleveland
Independence, OH
Tel: 216-447-0464
Fax: 216-447-0643

Dallas
Addison, TX
Tel: 972-818-7423
Fax: 972-818-2924

Detroit
Farmington Hills, MI
Tel: 248-538-2250
Fax: 248-538-2260

Indianapolis
Noblesville, IN
Tel: 317-773-8323
Fax: 317-773-5453

Los Angeles
Mission Viejo, CA
Tel: 949-462-9523
Fax: 949-462-9608

Santa Clara
Santa Clara, CA
Tel: 408-961-6444
Fax: 408-961-6445

Toronto
Mississauga, Ontario,
Canada
Tel: 905-673-0699
Fax: 905-673-6509

ASIA/PACIFIC

Asia Pacific Office
Suites 3707-14, 37th Floor
Tower 6, The Gateway
Harbour City, Kowloon
Hong Kong
Tel: 852-2401-1200
Fax: 852-2401-3431

Australia - Sydney
Tel: 61-2-9868-6733
Fax: 61-2-9868-6755

China - Beijing
Tel: 86-10-8569-7000
Fax: 86-10-8528-2104

China - Chengdu
Tel: 86-28-8665-5511
Fax: 86-28-8665-7889

China - Chongqing
Tel: 86-23-8980-9588
Fax: 86-23-8980-9500

China - Hangzhou
Tel: 86-571-2819-3187
Fax: 86-571-2819-3189

China - Hong Kong SAR
Tel: 852-2401-1200
Fax: 852-2401-3431

China - Nanjing
Tel: 86-25-8473-2460
Fax: 86-25-8473-2470

China - Qingdao
Tel: 86-532-8502-7355
Fax: 86-532-8502-7205

China - Shanghai
Tel: 86-21-5407-5533
Fax: 86-21-5407-5066

China - Shenyang
Tel: 86-24-2334-2829
Fax: 86-24-2334-2393

China - Shenzhen
Tel: 86-755-8203-2660
Fax: 86-755-8203-1760

China - Wuhan
Tel: 86-27-5980-5300
Fax: 86-27-5980-5118

China - Xian
Tel: 86-29-8833-7252
Fax: 86-29-8833-7256

China - Xiamen
Tel: 86-592-2388138
Fax: 86-592-2388130

China - Zhuhai
Tel: 86-756-3210040
Fax: 86-756-3210049

ASIA/PACIFIC

India - Bangalore
Tel: 91-80-3090-4444
Fax: 91-80-3090-4123

India - New Delhi
Tel: 91-11-4160-8631
Fax: 91-11-4160-8632

India - Pune
Tel: 91-20-2566-1512
Fax: 91-20-2566-1513

Japan - Osaka
Tel: 81-66-152-7160
Fax: 81-66-152-9310

Japan - Yokohama
Tel: 81-45-471- 6166
Fax: 81-45-471-6122

Korea - Daegu
Tel: 82-53-744-4301
Fax: 82-53-744-4302

Korea - Seoul
Tel: 82-2-554-7200
Fax: 82-2-558-5932 or
82-2-558-5934

Malaysia - Kuala Lumpur
Tel: 60-3-6201-9857
Fax: 60-3-6201-9859

Malaysia - Penang
Tel: 60-4-227-8870
Fax: 60-4-227-4068

Philippines - Manila
Tel: 63-2-634-9065
Fax: 63-2-634-9069

Singapore
Tel: 65-6334-8870
Fax: 65-6334-8850

Taiwan - Hsin Chu
Tel: 886-3-5778-366
Fax: 886-3-5770-955

Taiwan - Kaohsiung
Tel: 886-7-536-4818
Fax: 886-7-330-9305

Taiwan - Taipei
Tel: 886-2-2500-6610
Fax: 886-2-2508-0102

Thailand - Bangkok
Tel: 66-2-694-1351
Fax: 66-2-694-1350

EUROPE

Austria - Wels
Tel: 43-7242-2244-39
Fax: 43-7242-2244-393

Denmark - Copenhagen
Tel: 45-4450-2828
Fax: 45-4485-2829

France - Paris
Tel: 33-1-69-53-63-20
Fax: 33-1-69-30-90-79

Germany - Munich
Tel: 49-89-627-144-0
Fax: 49-89-627-144-44

Italy - Milan
Tel: 39-0331-742611
Fax: 39-0331-466781

Netherlands - Drunen
Tel: 31-416-690399
Fax: 31-416-690340

Spain - Madrid
Tel: 34-91-708-08-90
Fax: 34-91-708-08-91

UK - Wokingham
Tel: 44-118-921-5869
Fax: 44-118-921-5820

11/29/11

© 2007-2012 Microchip Technology Inc.