NOTES:

1. MATERIALS: SHROUDED WAFER: LCP, COLOR: BLACK, 94V-0
   PINS: COPPER ALLOY
2. FINISHES:
   TIN: .000150/(0.00381) MINIMUM TIN OVER
   .000050/(0.00127) MINIMUM NICKEL.
   15 GOLD: .000015/(0.00038) MINIMUM GOLD PLATE IN SELECTED AREA AND
   .000075/(0.00191) MINIMUM TIN IN SELECTED AREA
   OVER .000050/(0.00127) MINIMUM NICKEL OVER-ALL.
   30 GOLD: .000030/(0.00076) MINIMUM GOLD PLATE IN SELECTED AREA AND
   .000075/(0.00191) MINIMUM TIN IN SELECTED AREA
   OVER .000050/(0.00127) MINIMUM NICKEL OVER-ALL.
3. PRODUCT SPECIFICATION: PS-71349-001
4. SEE SHEETS 3 AND 4 FOR PACKAGING DETAILS.
5. ROW TO ROW PIN HEIGHT VARIATION MUST NOT EXCEED .010/(0.25).
6. THIS SHOULDER IS .125/(3.18) FOR 6 CIRCUIT ONLY.
   .174/(4.42) FOR ALL OTHER CIRCUIT SIZES.
7. 20 CIRCUIT SIZE SHOWN FOR ILLUSTRATION PURPOSES.
8. PIN SMT TAILS MUST MEET SOLDERABILITY PER
   MIL-STD-202, METHOD 208B.
9. PIN PUSHOUT FORCE 4 LBS/(17.79N) MINIMUM IN DIRECTION INDICATED.
10. PRODUCT MATES TO 70013B (6 TO 50 CKTS).
11. THIS PART CONFORMS TO CLASS B REQUIREMENTS OF COSMETIC
    SPECIFICATION PS-45499-002.
12. PIN FEET TO BE COPLANAR WITHIN .008/(0.20) TOTAL.

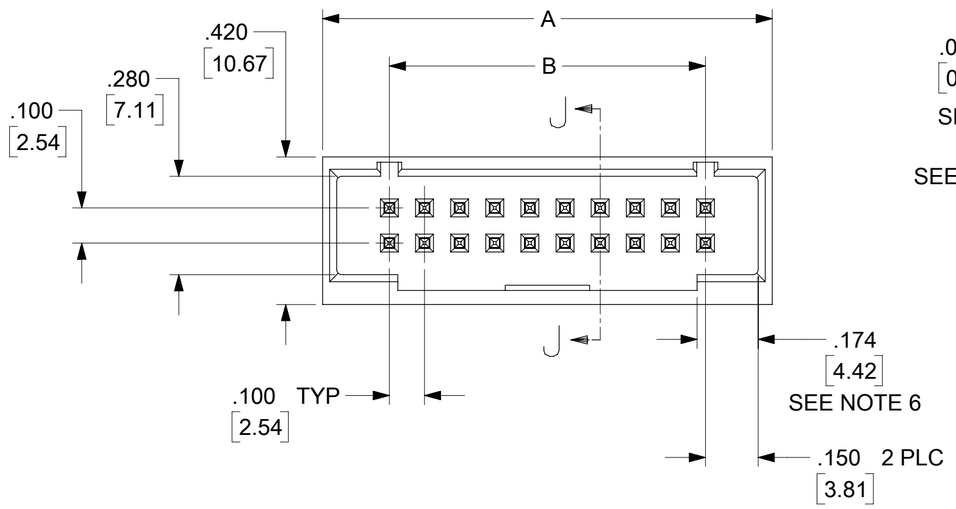

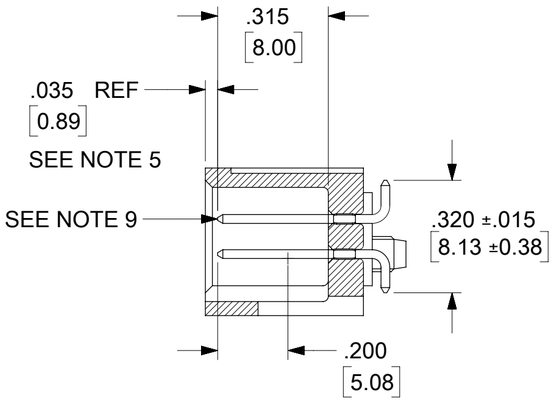

SECTION J-J

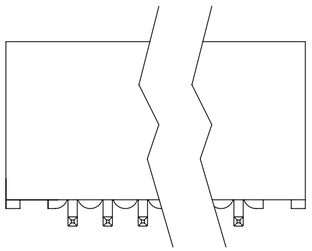

NO PEGS

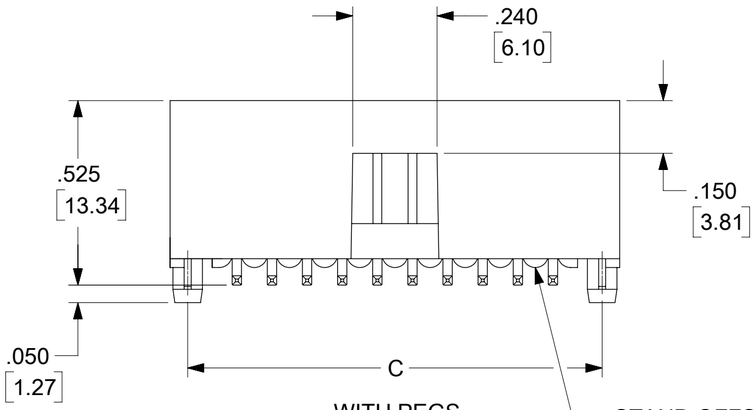

WITH PEGS

STAND OFFS CAN BE EITHER
ROUND OR SQUARE.

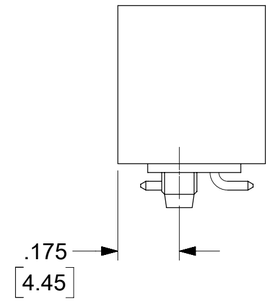

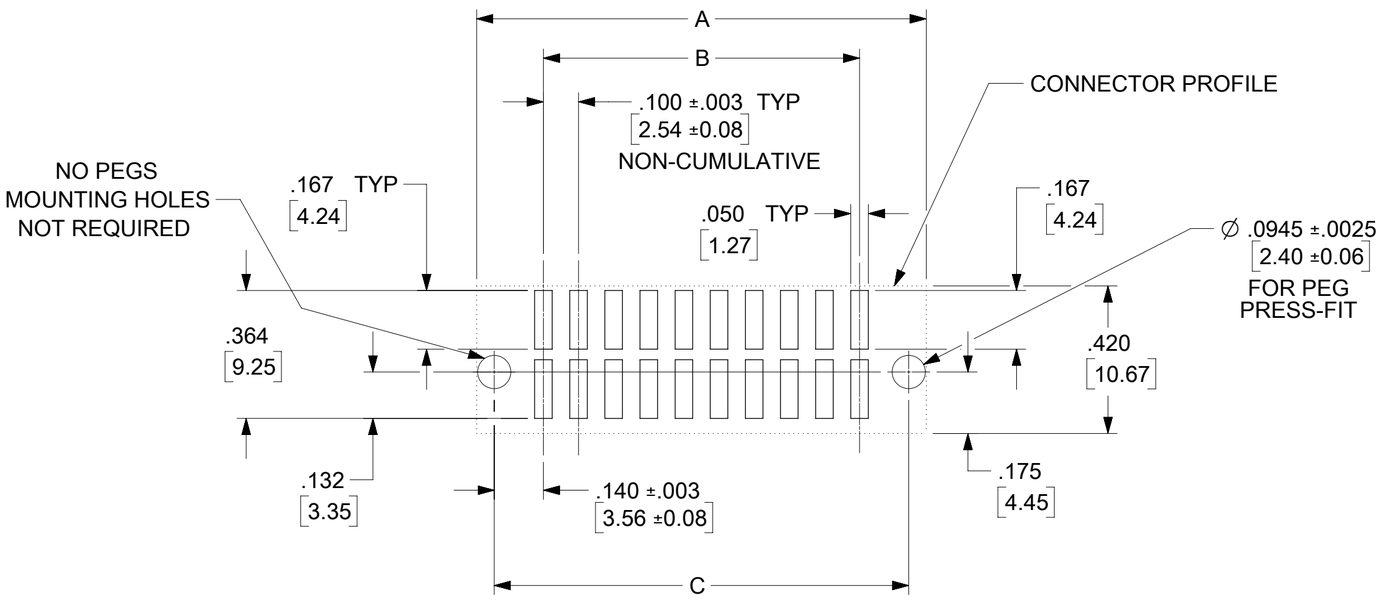

RECOMMENDED P.C.BOARD LAYOUT

THIS DRAWING CONTAINS INFORMATION THAT IS PROPRIETARY TO MOLEX ELECTRONIC TECHNOLOGIES, LLC AND SHOULD NOT BE USED WITHOUT WRITTEN PERMISSION

DIMENSION UNITS	SCALE
IN/MM	3:1

GENERAL TOLERANCES (UNLESS SPECIFIED)

	MM	INCH
4 PLACES	±	±
3 PLACES	±	± 0.005
2 PLACES	± 0.13	± 0.01
1 PLACE	± 0.25	±
0 PLACES	±	±
ANGULAR TOL	± 0.5 °	

DRAFT WHERE APPLICABLE MUST REMAIN WITHIN DIMENSIONS

CURRENT REV DESC:

EC NO: 705684
DRWN: ABABUPS 2021/08/26
CHK'D: DANUSA 2022/05/05
APPR: MRAMAKRISHNA 2022/05/05

INITIAL REVISION:
DRWN: RB 1992/10/26
APPR: SMILLER 2011/07/22

THIRD ANGLE PROJECTION | DRAWING: C-SIZE | SERIES: 71349

molex

SALES ASSY,WAFER-4 SIDES
SHROUDED, HIGH TEMP, SMT POLAR SLOTS, .100 GRID

PRODUCT CUSTOMER DRAWING

DOCUMENT NUMBER	DOC TYPE	DOC PART	REVISION
SDA-71349-XXXX	PSD	001	N2

MATERIAL NUMBER	CUSTOMER	SHEET NUMBER
SEE TABLE	GENERAL MARKET	1 OF 5

DOCUMENT STATUS	P1	RELEASE DATE	2022/05/05 09:27:20

FORMAT: Eng-lega-master-tb-prod-C
REVISION: E
DATE: 2020/01/14

NO. OF CKTS	"A"		"B"		"C"	
	INCH ±.005	MM ±.13	INCH ±.003	MM ±.08	INCH ±.003	MM ±.08
06	.580	14.73	.200	5.08	.480	12.19
08	.680	17.27	.300	7.62	.580	14.73
10	.780	19.81	.400	10.16	.680	17.27
12	.880	22.35	.500	12.70	.780	19.81
14	.980	24.89	.600	15.24	.880	22.35
16	1.080	27.43	.700	17.78	.980	24.89
18	1.180	29.97	.800	20.32	1.080	27.43
20	1.280	32.51	.900	22.86	1.180	29.97
22	1.380	35.05	1.000	25.40	1.280	32.51
24	1.480	37.59	1.100	27.94	1.380	35.05
26	1.580	40.13	1.200	30.48	1.480	37.59
28	1.680	42.67	1.300	33.02	1.580	40.13
30	1.780	45.21	1.400	35.56	1.680	42.67
32	1.880	47.75	1.500	38.10	1.780	45.21
34	1.980	50.29	1.600	40.64	1.880	47.75
36	2.080	52.83	1.700	43.18	1.980	50.29
38	2.180	55.37	1.800	45.72	2.080	52.83
40	2.280	57.91	1.900	48.26	2.180	55.37
42	2.380	60.45	2.000	50.80	2.280	57.91
44	2.480	62.99	2.100	53.34	2.380	60.45
46	2.580	65.53	2.200	55.88	2.480	62.99
48	2.680	68.07	2.300	58.42	2.580	65.53
50	2.780	70.61	2.400	60.96	2.680	68.07
52	2.880	73.15	2.500	63.50	2.780	70.61
54	2.980	75.69	2.600	66.04	2.880	73.15
56	3.080	78.23	2.700	68.58	2.980	75.69
58	3.180	80.77	2.800	71.12	3.080	78.23
60	3.280	83.31	2.900	73.66	3.180	80.77
62	3.380	85.85	3.000	76.20	3.280	83.31
64	3.480	88.39	3.100	78.74	3.380	85.85
66	3.580	90.93	3.200	81.28	3.480	88.39
68	3.680	93.47	3.300	83.82	3.580	90.93
70	3.780	96.01	3.400	86.36	3.680	93.47
72	3.880	98.55	3.500	88.90	3.780	96.01

THIS DRAWING CONTAINS INFORMATION THAT IS PROPRIETARY TO MOLEX ELECTRONIC TECHNOLOGIES, LLC AND SHOULD NOT BE USED WITHOUT WRITTEN PERMISSION

DIMENSION UNITS	SCALE
IN/MM	1:1

GENERAL TOLERANCES (UNLESS SPECIFIED)

	MM	INCH
4 PLACES	±	±
3 PLACES	±	± 0.005
2 PLACES	± 0.13	± 0.01
1 PLACE	± 0.25	±
0 PLACES	±	±
ANGULAR TOL	± 0.5 °	

DRAFT WHERE APPLICABLE MUST REMAIN WITHIN DIMENSIONS

CURRENT REV DESC:

EC NO: 705684
DRWN: ABABUPS 2021/08/26
CHK'D: DANUSA 2022/05/05
APPR: MRAMAKRISHNA 2022/05/05

INITIAL REVISION:
DRWN: RB 1992/10/26
APPR: SMILLER 2011/07/22

molex

SALES ASSY,WAFER-4 SIDES SHROUDED, HIGH TEMP, SMT POLAR SLOTS, .100 GRID

PRODUCT CUSTOMER DRAWING

DOCUMENT NUMBER	DOC TYPE	DOC PART	REVISION
SDA-71349-XXXX	PSD	001	N2

THIRD ANGLE PROJECTION	DRAWING	SERIES	MATERIAL NUMBER	CUSTOMER	SHEET NUMBER
	C-SIZE	71349	SEE TABLE	GENERAL MARKET	2 OF 5

DOCUMENT STATUS	P1	RELEASE DATE	2022/05/05 09:27:20

FORMAT: Eng-lega-master-tb-prod-C
REVISION: E
DATE: 2020/01/14

WITH PEGS							WITHOUT PEGS						
PLATING	TIN		15 GOLD		30 GOLD		PLATING	TIN		15 GOLD		30 GOLD	
PACKAGING	TUBES PK-70873-0019	TAPE & REEL PK-71349-001	TUBES PK-70873-0019	TAPE & REEL PK-71349-001	TUBES PK-70873-0019	TAPE & REEL PK-71349-001	PACKAGING	TUBES PK-70873-0018	TAPE & REEL PK-71349-001	TUBES PK-70873-0018	TAPE & REEL PK-71349-001	TUBES PK-70873-0018	TAPE & REEL PK-71349-001
NO. OF CKTS	ASSEMBLY ITEM NO.		ASSEMBLY ITEM NO.		ASSEMBLY ITEM NO.	ASSEMBLY ITEM NO.	NO. OF CKTS	ASSEMBLY ITEM NO.	ASSEMBLY ITEM NO.	ASSEMBLY ITEM NO.	ASSEMBLY ITEM NO.	ASSEMBLY ITEM NO.	ASSEMBLY ITEM NO.
06	71349-2001		71349-2035		71349-2069		06	71349-1001		71349-1035		71349-1069	
08	71349-2002		71349-2036		71349-2070		08	71349-1002	71349-9002	71349-1036	71349-0036	71349-1070	71349-5036
10	71349-2003	71349-6003	71349-2037	71349-8037	71349-2071	71349-4071	10	71349-1003	71349-9003	71349-1037	71349-0037	71349-1071	71349-5037
12	71349-2004		71349-2038		71349-2072		12	71349-1004		71349-1038		71349-1072	
14	71349-2005		71349-2039		71349-2073		14	71349-1005	71349-9005	71349-1039	71349-0089	71349-1073	
16	71349-2006		71349-2040		71349-2074	71349-4074 (N2)	16	71349-1006		71349-1040	71349-0040	71349-1074	71349-5040
18	71349-2007		71349-2041		71349-2075		18	71349-1007		71349-1041		71349-1075	
20	71349-2008	71349-6008	71349-2042	71349-8042	71349-2076	71349-4076	20	71349-1008	71349-9008	71349-1042		71349-1076	71349-5042
20	-	-	-	-	-	-	20	-	-		71349-0082	-	-
22	71349-2009		71349-2043		71349-2077		22	71349-1009		71349-1043		71349-1077	
24	71349-2010		71349-2044		71349-2078		24	71349-1010		71349-1044		71349-1078	
26	71349-2011		71349-2045		71349-2079		26	71349-1011		71349-1045		71349-1079	
28	71349-2012		71349-2046		71349-2080		28	71349-1012		71349-1046		71349-1080	
30	71349-2013		71349-2047		71349-2081		30	71349-1013		71349-1047		71349-1081	
32	71349-2014		71349-2048		71349-2082		32	71349-1014		71349-1048		71349-1082	
34	71349-2015		71349-2049		71349-2083		34	71349-1015		71349-1049		71349-1083	
36	71349-2016		71349-2050		71349-2084		36	71349-1016		71349-1050		71349-1084	
38	71349-2017		71349-2051		71349-2085		38	71349-1017		71349-1051		71349-1085	
40	71349-2018		71349-2052		71349-2086		40	71349-1018		71349-1052		71349-1086	
42	71349-2019		71349-2053		71349-2087		42	71349-1019		71349-1053		71349-1087	
44	71349-2020		71349-2054		71349-2088		44	71349-1020		71349-1054		71349-1088	
46	71349-2021		71349-2055		71349-2089		46	71349-1021		71349-1055		71349-1089	
48	71349-2022		71349-2056		71349-2090		48	71349-1022		71349-1056		71349-1090	
50	71349-2023	71349-6023	71349-2057	71349-8057	71349-2091	71349-4091	50	71349-1023	71349-9023	71349-1057	71349-0057	71349-1091	71349-5057
52	71349-2024		71349-2058		71349-2092		52	71349-1024		71349-1058		71349-1092	
54	71349-2025		71349-2059		71349-2093		54	71349-1025		71349-1059		71349-1093	
56	71349-2026		71349-2060		71349-2094		56	71349-1026		71349-1060		71349-1094	
58	71349-2027		71349-2061		71349-2095		58	71349-1027		71349-1061		71349-1095	
60	71349-2028		71349-2062		71349-2096		60	71349-1028		71349-1062		71349-1096	
62	71349-2029		71349-2063		71349-2097		62	71349-1029		71349-1063		71349-1097	
64	71349-2030		71349-2064		71349-2098		64	71349-1030		71349-1064		71349-1098	
66	71349-2031		71349-2065		71349-2099		66	71349-1031		71349-1065		71349-1099	
68	71349-2032		71349-2066		71349-2100		68	71349-1032		71349-1066		71349-1100	
70	71349-2033		71349-2067		71349-2101		70	71349-1033		71349-1067		71349-1101	
72	71349-2034		71349-2068		71349-2102		72	71349-1034		71349-1068		71349-1102	

THIS DRAWING CONTAINS INFORMATION THAT IS PROPRIETARY TO MOLEX ELECTRONIC TECHNOLOGIES, LLC AND SHOULD NOT BE USED WITHOUT WRITTEN PERMISSION

DIMENSION UNITS	SCALE
IN/MM	1:1

GENERAL TOLERANCES (UNLESS SPECIFIED)

	MM	INCH
4 PLACES	±	±
3 PLACES	±	± 0.005
2 PLACES	± 0.13	± 0.01
1 PLACE	± 0.25	±
0 PLACES	±	±
ANGULAR TOL	± 0.5 °	

DRAFT WHERE APPLICABLE MUST REMAIN WITHIN DIMENSIONS

CURRENT REV DESC:

EC NO: 705684
DRWN: ABABUPS 2021/08/26
CHK'D: DANUSA 2022/05/05
APPR: MRAMAKRISHNA 2022/05/05

INITIAL REVISION:
DRWN: RB 1992/10/26
APPR: SMILLER 2011/07/22

molex

SALES ASSY,WAFER-4 SIDES SHROUDED, HIGH TEMP, SMT POLAR SLOTS, .100 GRID

PRODUCT CUSTOMER DRAWING

DOCUMENT NUMBER	DOC TYPE	DOC PART	REVISION
SDA-71349-XXXX	PSD	001	N2

THIRD ANGLE PROJECTION	DRAWING	SERIES	MATERIAL NUMBER	CUSTOMER	SHEET NUMBER
	C-SIZE	71349	SEE TABLE	GENERAL MARKET	3 OF 5

DOCUMENT STATUS	P1	RELEASE DATE	2022/05/05 09:27:20

FORMAT: Eng-lega-master-tb-prod-C
REVISION: K
DATE: 2020/01/14

NO. OF CKTS	SPECIALS - WITH VOIDS					
	ITEM NO.	VOID CKTS	PLATING	HOUSING OPTION		PACKAGING
				PEGS	NO PEGS	
22	71349-3001	12	30 GOLD		X	PK-70873-0018
40	71349-3002	20	15 GOLD	X		PK-70873-0019
34	71349-3003	20	15 GOLD	X		PK-70873-0019
50	71349-3004	27,28,29,30,31,32,35 36,37,38,43,44,45,46	15 GOLD	X		PK-70873-0019

CIRCUIT NUMBERING CONVENTION
(20 CKT USED AS EXAMPLE)

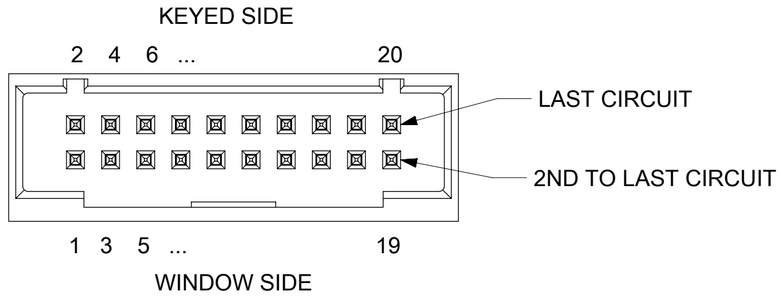

THIS DRAWING CONTAINS INFORMATION THAT IS PROPRIETARY TO MOLEX ELECTRONIC TECHNOLOGIES, LLC AND SHOULD NOT BE USED WITHOUT WRITTEN PERMISSION

DIMENSION UNITS	SCALE
IN/MM	3:1

GENERAL TOLERANCES (UNLESS SPECIFIED)

	MM	INCH
4 PLACES	±	±
3 PLACES	±	± 0.005
2 PLACES	± 0.13	± 0.01
1 PLACE	± 0.25	±
0 PLACES	±	±
ANGULAR TOL	± 0.5 °	

DRAFT WHERE APPLICABLE MUST REMAIN WITHIN DIMENSIONS

CURRENT REV DESC:

EC NO: 705684
DRWN: ABABUPS 2021/08/26
CHK'D: DANUSA 2022/05/05
APPR: MRAMAKRISHNA 2022/05/05

INITIAL REVISION:
DRWN: RB 1992/10/26
APPR: SMILLER 2011/07/22

THIRD ANGLE PROJECTION | DRAWING: C-SIZE | SERIES: 71349

molex

SALES ASSY,WAFER-4 SIDES SHROUDED, HIGH TEMP, SMT POLAR SLOTS, .100 GRID

PRODUCT CUSTOMER DRAWING

DOCUMENT NUMBER	DOC TYPE	DOC PART	REVISION
SDA-71349-XXXX	PSD	001	N2

MATERIAL NUMBER	CUSTOMER	SHEET NUMBER
SEE TABLE	GENERAL MARKET	4 OF 5

DOCUMENT STATUS	P1	RELEASE DATE	2022/05/05 09:27:20

FORMAT: Eng-lega-master-tb-prod-C
REVISION: E
DATE: 2020/01/14

BOARD TO BOARD (BTB) DISTANCE

RECEPTACLE	HEADER	BTB DISTANCE (IN MM)	PICTORIAL VIEW
71395	71349	13.80	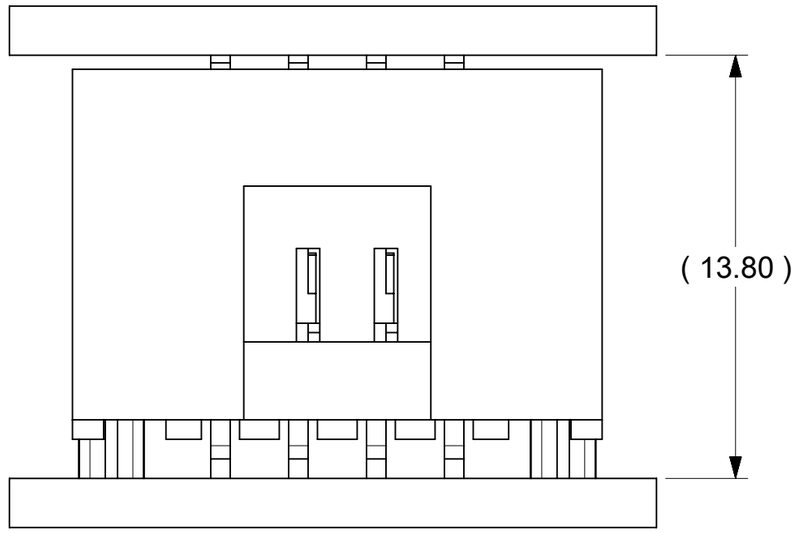

THIS DRAWING CONTAINS INFORMATION THAT IS PROPRIETARY TO MOLEX ELECTRONIC TECHNOLOGIES, LLC AND SHOULD NOT BE USED WITHOUT WRITTEN PERMISSION

DIMENSION UNITS	SCALE
mm	5:1

GENERAL TOLERANCES (UNLESS SPECIFIED)

ANGULAR TOL	±	0.5 °
4 PLACES	±	
3 PLACES	±	
2 PLACES	±	0.13
1 PLACE	±	0.25
0 PLACES	±	

DRAFT WHERE APPLICABLE MUST REMAIN WITHIN DIMENSIONS

CURRENT REV DESC:

EC NO: 705684
DRWN: ABABUPS 2021/08/26
CHK'D: DANUSA 2022/05/05
APPR: MRAMAKRISHNA 2022/05/05

INITIAL REVISION:
DRWN: RFC_PLMIMP 2018/11/29
APPR: DBRINKMA 2000/11/29

THIRD ANGLE PROJECTION | DRAWING: A3-SIZE | SERIES: 71349

molex

SALES ASSY,WAFER-4 SIDES SHROUDED, HIGH TEMP, SMT POLAR SLOTS, .100 GRID

PRODUCT CUSTOMER DRAWING

DOCUMENT NUMBER	DOC TYPE	DOC PART	REVISION
SDA-71349-XXXX	PSD	001	N2

MATERIAL NUMBER	CUSTOMER	SHEET NUMBER
SEE TABLE	GENERAL MARKET	5 OF 5

DOCUMENT STATUS	P1	RELEASE DATE	2022/05/05 09:27:20

FORMAT: master-lb-prod-A3
REVISION: J
DATE: 2020/01/14