MATERIALS AND FINISH

BODY: BRASS
PLATED TIN

CENTER CONTACT: BERYLLIUM COPPER
PLATED GOLD

CONTACT: BRASS
PLATED GOLD

INSULATOR: TEFLON

JAM NUT: BRASS
PLATED NICKEL

WASHER: PHOSPHOR BRONZE
PLATED NICKEL

ELECTRICAL CHARACTERISTICS:

FREQUENCY RANGE: DC TO 12 GHZ.
NOMINAL IMPEDANCE: 75Ω
RF RETURN LOSS:
CONNECTOR ONLY (MODEL BASED)

FREQUENCY	MIN RL
0-6 GHz	30 dB
6-12 GHz	20 dB

CONNECTOR WITH PCB LAUNCH
(MEASURED DATA WITH OPTIMIZED PCB
LAUNCH, FOR REFERENCE ONLY)

FREQUENCY	MIN RL
0-6 GHz	22 dB
6-12 GHz	16 dB

RF INSERTION LOSS: 0.5 dB MAX

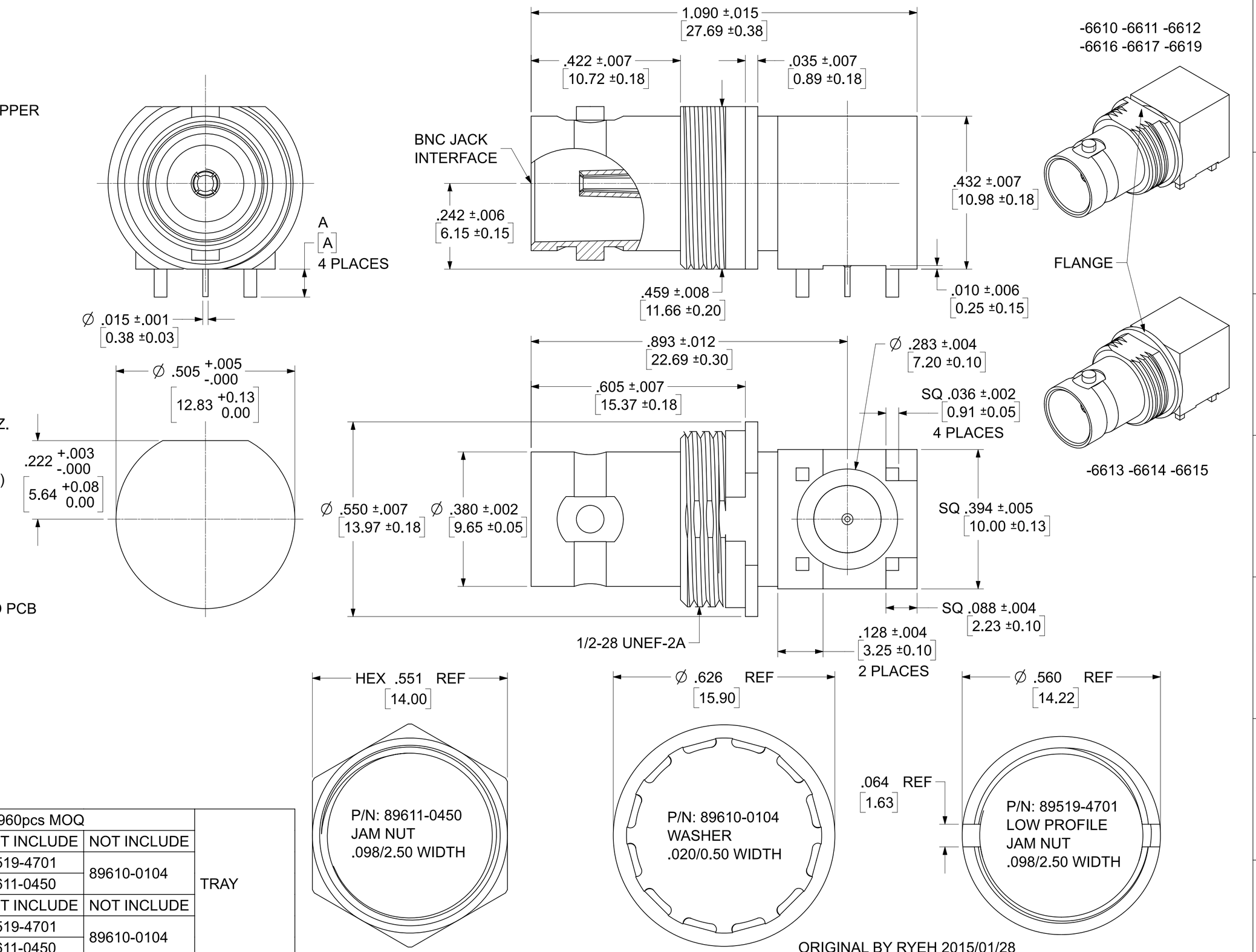

73171-6619	SAME AS 73171-6611 in 960pcs MOQ				TRAY
73171-6618	.083±.007	2.10±0.18	NOT INCLUDE	NOT INCLUDE	
73171-6617			89519-4701	89610-0104	
73171-6616			89611-0450		
73171-6612	.079±.007	2.01±0.18	NOT INCLUDE	NOT INCLUDE	
73171-6611			89519-4701	89610-0104	
73171-6610			89611-0450		
PART NO.	IN	MM	JAM NUT	WASHER	PACKAGING
	DIM A (IN/MM)				

MIL-STD-348B, FIG. 330-1	INTERFACE
SPECIFICATION	DESCRIPTION

ORIGINAL BY RYEH 2015/01/28

THIS DRAWING CONTAINS INFORMATION THAT IS PROPRIETARY TO MOLEX ELECTRONIC TECHNOLOGIES, LLC AND SHOULD NOT BE USED WITHOUT WRITTEN PERMISSION

FUNCTIONAL SYMBOLS: FA = 0, FC = 0, FP = 0

DIVISIONAL SYMBOLS

DIMENSION UNITS	SCALE
HYBRID	NTS

GENERAL TOLERANCES (UNLESS SPECIFIED)

ANGULAR TOL	± 2°
4 PLACES	±
3 PLACES	±
2 PLACES	±
1 PLACE	±
0 PLACES	±

DRAFT WHERE APPLICABLE MUST REMAIN WITHIN DIMENSIONS

CURRENT REV DESC: ADD PN 73171-6619 PER EWR17244-A

STATUS: Production
DRWN: Cela Wei 2025-06-03
CHK'D: Kerrie Chen 2025-06-17
APPR: YCHENG 2025-06-17

THIRD ANGLE PROJECTION | DRAWING: C-SIZE | SERIES: 73171

molex

BNC JACK R/A PCB TH
75 OHMS DC-12GHZ BNC-J/PCB

PRODUCT CUSTOMER DRAWING

DOCUMENT NUMBER	DOC TYPE	DOC PART	REVISION
SD-73171-661	PSD	001	C4

MATERIAL NUMBER	CUSTOMER	SHEET NUMBER
SEE TABLE	GENERAL MARKET	1 OF 6

FORMAT: TC-B-proS-C
REVISION: B
DATE: 2022/08/01

MATERIALS AND FINISH

BODY: BRASS
PLATED TIN

CENTER CONTACT: BERYLLIUM COPPER
PLATED GOLD

CONTACT: BRASS
PLATED GOLD

INSULATOR: TEFLON

JAM NUT: BRASS
PLATED NICKEL

WASHER: PHOSPHOR BRONZE
PLATED NICKEL

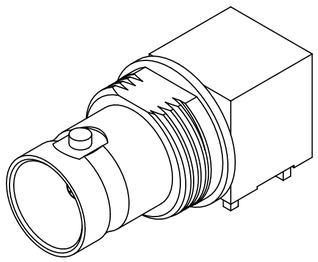

ELECTRICAL CHARACTERISTICS:

FREQUENCY RANGE: DC TO 12 GHZ.
NOMINAL IMPEDANCE: 75Ω
RF RETURN LOSS:
CONNECTOR ONLY (MODEL BASED)

FREQUENCY	MIN RL
0-6 GHz	30 dB
6-12 GHz	20 dB

CONNECTOR WITH PCB LAUNCH
(MEASURED DATA WITH OPTIMIZED PCB
LAUNCH, FOR REFERENCE ONLY)

FREQUENCY	MIN RL
0-6 GHz	22 dB
6-12 GHz	16 dB

RF INSERTION LOSS: 0.5 dB MAX

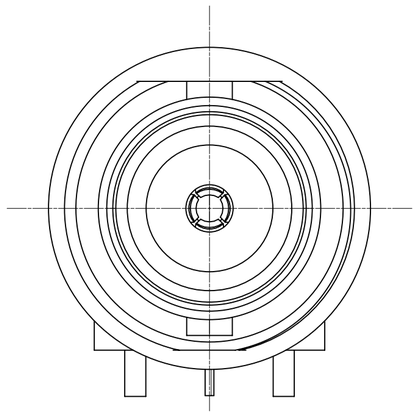

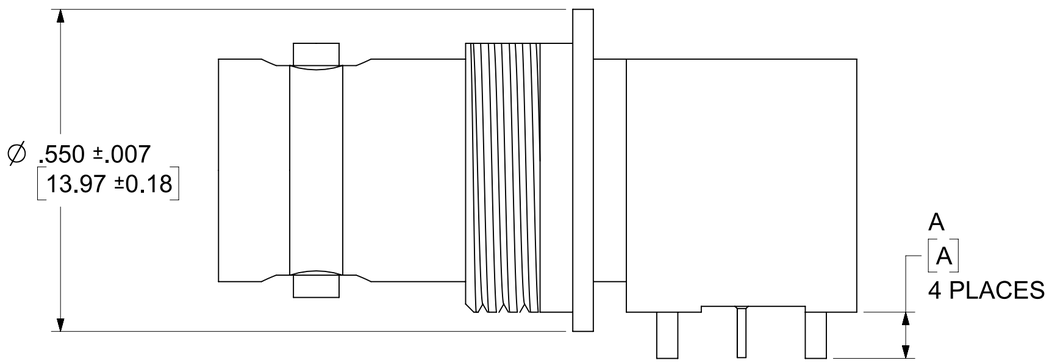

ALL DIMENSIONS AND HARDWARE OF 73171-6613 THRU -6615 ARE THE SAME
AS 73171-6610 THRU -6612 EXCEPT FLANGE

PART NO.	IN	MM	JAM NUT	WASHER	PACKAGING
	DIM A				
73171-6615	.079±.007	2.01±0.18	NOT INCLUDE	NOT INCLUDE	TRAY
73171-6614			89519-4701	89610-0104	
73171-6613			89611-0450		

THIS DRAWING CONTAINS INFORMATION THAT IS PROPRIETARY TO MOLEX ELECTRONIC TECHNOLOGIES, LLC AND SHOULD NOT BE USED WITHOUT WRITTEN PERMISSION

FUNCTIONAL SYMBOLS
FA = 0
FC = 0
FP = 0
DIVISIONAL SYMBOLS

DIMENSION UNITS: HYBRID
SCALE: NTS

GENERAL TOLERANCES (UNLESS SPECIFIED)

ANGULAR TOL	± 2°
4 PLACES	±
3 PLACES	±
2 PLACES	±
1 PLACE	±
0 PLACES	±

DRAFT WHERE APPLICABLE MUST REMAIN WITHIN DIMENSIONS

CURRENT REV DESC: ADD PN 73171-6619 PER EWR17244-A

STATUS: Production
DRWN: Cela Wei 2025-06-03
CHK'D: Kerrie Chen 2025-06-17
APPR: YCHENG 2025-06-17

THIRD ANGLE PROJECTION

DRAWING: C-SIZE
SERIES: 73171

molex

BNC JACK R/A PCB TH
75 OHMS DC-12GHZ BNC-J/PCB

PRODUCT CUSTOMER DRAWING

DOCUMENT NUMBER	DOC TYPE	DOC PART	REVISION
SD-73171-661	PSD	001	C4

MATERIAL NUMBER	CUSTOMER	SHEET NUMBER
SEE TABLE	GENERAL MARKET	2 OF 6

RECOMMENDED PCB LAYOUT
(THICKNESS 1.60/.063)

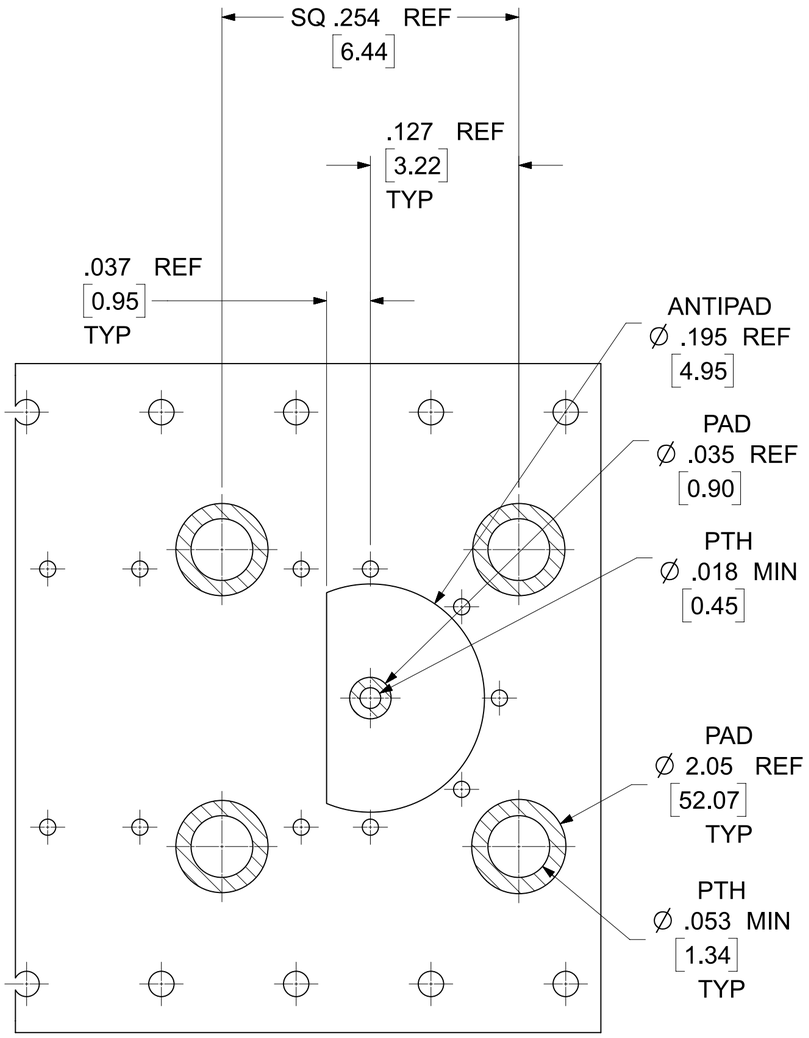

TOP VIEW

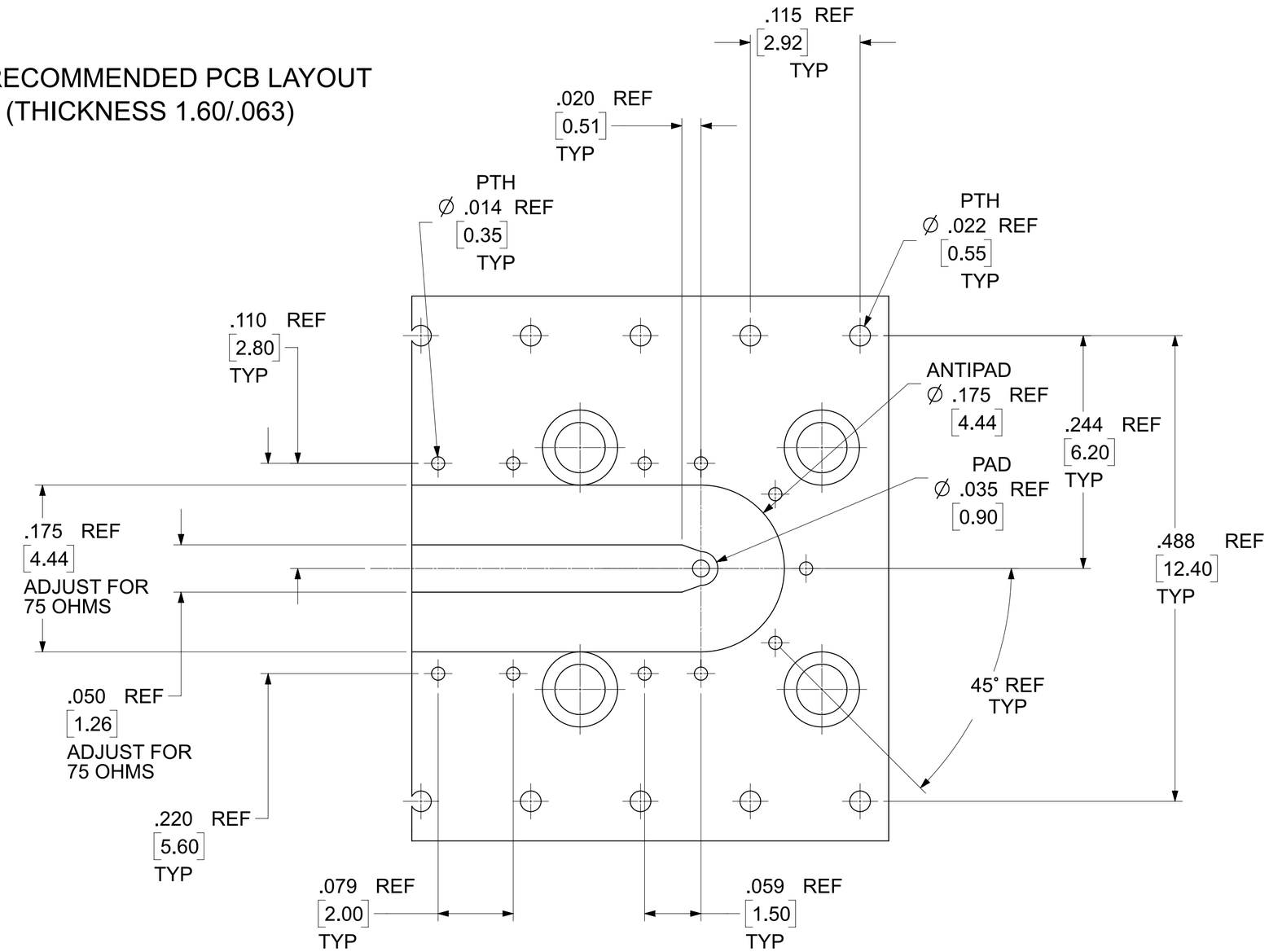

BOTTOM VIEW

THIS DRAWING CONTAINS INFORMATION THAT IS PROPRIETARY TO MOLEX ELECTRONIC TECHNOLOGIES, LLC AND SHOULD NOT BE USED WITHOUT WRITTEN PERMISSION

FUNCTIONAL SYMBOLS	DIMENSION UNITS: HYBRID	SCALE: NTS	CURRENT REV DESC: ADD PN 73171-6619 PER EWR17244-A
FA = 0	GENERAL TOLERANCES (UNLESS SPECIFIED)		
FC = 0	ANGULAR TOL ± 2°		
FP = 0	4 PLACES ±		
DIVISIONAL SYMBOLS	3 PLACES ±		STATUS: Production
	2 PLACES ±		DRWN: Cela Wei 2025-06-03
	1 PLACE ±		CHK'D: Kerrie Chen 2025-06-17
	0 PLACES ±		APPR: YCHENG 2025-06-17
	DRAFT WHERE APPLICABLE MUST REMAIN WITHIN DIMENSIONS	THIRD ANGLE PROJECTION	DRAWING: C-SIZE / SERIES: 73171

molex

BNC JACK R/A PCB TH
75 OHMS DC-12GHZ BNC-J/PCB

PRODUCT CUSTOMER DRAWING

DOCUMENT NUMBER	DOC TYPE	DOC PART	REVISION
SD-73171-661	PSD	001	C4

MATERIAL NUMBER	CUSTOMER	SHEET NUMBER
SEE TABLE	GENERAL MARKET	3 OF 6

FORMAT: TC-B-prod-C
REVISION: B
DATE: 2022/08/01

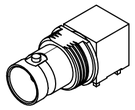

P/N: 73171-6610 -6611 -6612 -6619

73171-6619	SAME AS 73171-6611		TRAY	480	960
73171-6612	NOT INCLUDE	NOT INCLUDE		480	480
73171-6611	89519-4701	89610-0104		480	480
73171-6610	89611-0450			480	480
PART NO.	JAM NUT	WASHER	PACKAGING	DU	MOQ

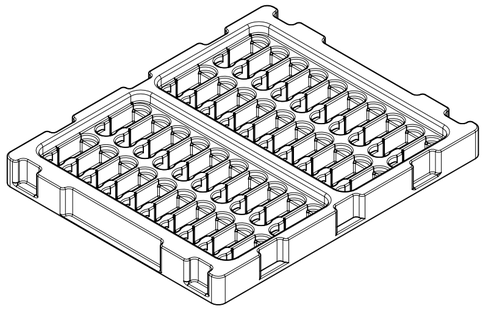

40 SETS PER TRAY
P/N: 89707-0169

P/N: 89611-0450

480 SETS PER BAG
P/N: 89707-0001

P/N: 89610-0104

480 SETS PER BAG
P/N: 89707-0001

P/N: 89519-4701

480 SETS PER BAG
P/N:89707-0001

P/N: 89610-0104

480 SETS PER BAG
P/N:89707-0001

FOR 73171-6610

FOR 73171-6611
73171-6619

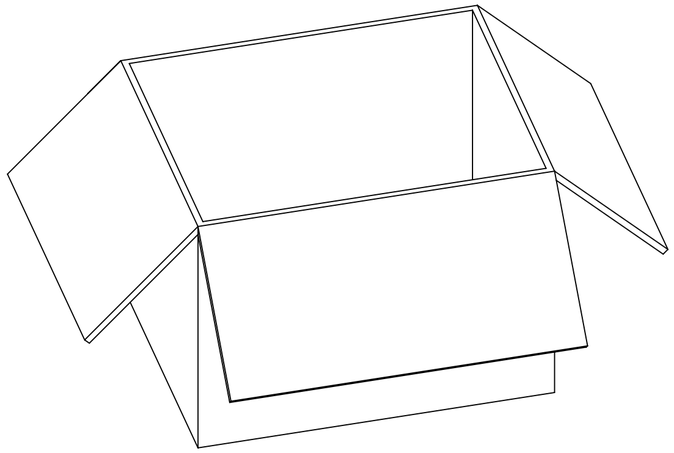

480 SETS PER OUTER
CARTON BOX
P/N: 89499-9027

THIS DRAWING CONTAINS INFORMATION THAT IS PROPRIETARY TO MOLEX ELECTRONIC TECHNOLOGIES, LLC AND SHOULD NOT BE USED WITHOUT WRITTEN PERMISSION

FUNCTIONAL SYMBOLS
FA = 0
FC = 0
FP = 0

DIVISIONAL SYMBOLS

DIMENSION UNITS	SCALE
HYBRID	NTS

GENERAL TOLERANCES (UNLESS SPECIFIED)

ANGULAR TOL	± 2°
4 PLACES	±
3 PLACES	±
2 PLACES	±
1 PLACE	±
0 PLACES	±

DRAFT WHERE APPLICABLE MUST REMAIN WITHIN DIMENSIONS

CURRENT REV DESC: ADD PN 73171-6619 PER EWR17244-A

STATUS: Production
DRWN: Cela Wei 2025-06-03
CHK'D: Kerrie Chen 2025-06-17
APPR: YCHENG 2025-06-17

THIRD ANGLE PROJECTION

DRAWING: C-SIZE
SERIES: 73171

molex

BNC JACK R/A PCB TH
75 OHMS DC-12GHZ BNC-J/PCB

PRODUCT CUSTOMER DRAWING

DOCUMENT NUMBER	DOC TYPE	DOC PART	REVISION
SD-73171-661	PSD	001	C4

MATERIAL NUMBER	CUSTOMER	SHEET NUMBER
SEE TABLE	GENERAL MARKET	4 OF 6

FORMAT: TC-0-prod-C
REVISION: B
DATE: 2022/08/01

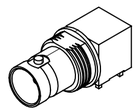

P/N: 73171-6613 -6614 -6615

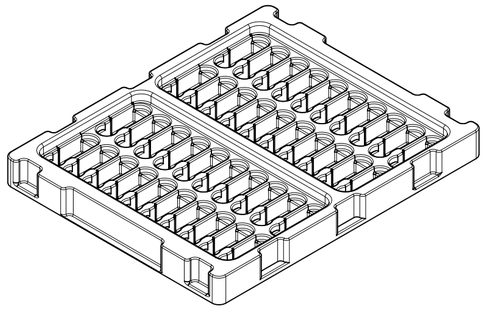

40 SETS PER TRAY
P/N: 89707-0169

73171-6615	NOT INCLUDE	NOT INCLUDE	TRAY	480	480
73171-6614	89519-4701	89610-0104		480	480
73171-6613	89611-0450			480	480
PART NO.	JAM NUT	WASHER	PACKAGING	DU	MOQ

P/N: 89611-0450

480 SETS PER BAG
P/N: 89707-0001

P/N: 89610-0104

480 SETS PER BAG
P/N: 89707-0001

P/N: 89519-4701

480 SETS PER BAG
P/N:89707-0001

P/N: 89610-0104

480 SETS PER BAG
P/N:89707-0001

FOR 73171-6613

FOR 73171-6614

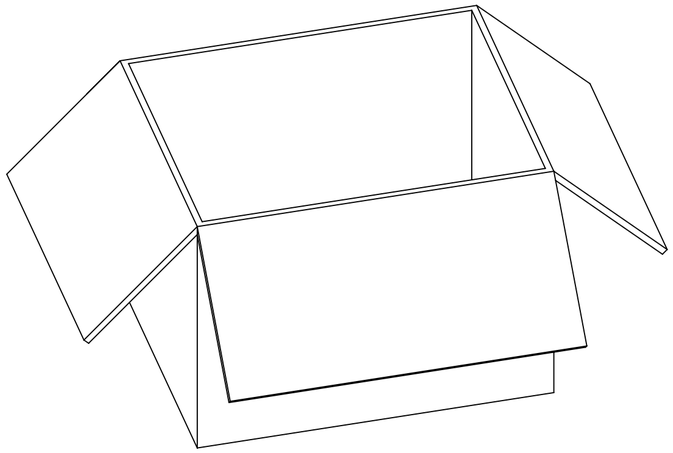

480 SETS PER OUTER
CARTON BOX
P/N: 89499-9027

THIS DRAWING CONTAINS INFORMATION THAT IS PROPRIETARY TO MOLEX ELECTRONIC TECHNOLOGIES, LLC AND SHOULD NOT BE USED WITHOUT WRITTEN PERMISSION

FUNCTIONAL SYMBOLS
FA = 0
FC = 0
FP = 0
DIVISIONAL SYMBOLS

DIMENSION UNITS	SCALE
HYBRID	NTS

GENERAL TOLERANCES (UNLESS SPECIFIED)

ANGULAR TOL	± 2°
4 PLACES	±
3 PLACES	±
2 PLACES	±
1 PLACE	±
0 PLACES	±

DRAFT WHERE APPLICABLE MUST REMAIN WITHIN DIMENSIONS

CURRENT REV DESC: ADD PN 73171-6619 PER EWR17244-A

STATUS: Production
DRWN: Cela Wei 2025-06-03
CHK'D: Kerrie Chen 2025-06-17
APPR: YCHENG 2025-06-17

THIRD ANGLE PROJECTION

molex

BNC JACK R/A PCB TH
75 OHMS DC-12GHZ BNC-J/PCB

PRODUCT CUSTOMER DRAWING

DRAWING	SERIES	MATERIAL NUMBER	CUSTOMER	SHEET NUMBER
C-SIZE	73171	SEE TABLE	GENERAL MARKET	5 OF 6

DOCUMENT NUMBER	DOC TYPE	DOC PART	REVISION
SD-73171-661	PSD	001	C4

FORMAT TC-dp-sd-C
REVISION: B
DATE: 2022/08/01

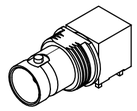

P/N: 73171-6616 -6617 -6618

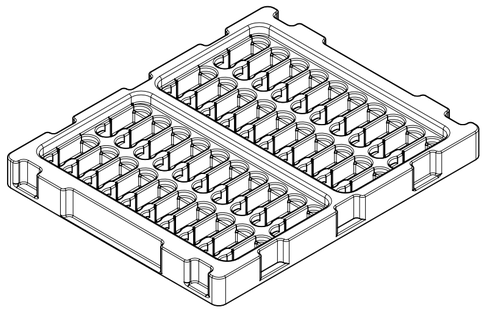

40 SETS PER TRAY
P/N: 89707-0169

73171-6618	NOT INCLUDE	NOT INCLUDE	TRAY	480	480
73171-6617	89519-4701	89610-0104		480	480
73171-6616	89611-0450			480	480
PART NO.	JAM NUT	WASHER	PACKAGING	DU	MOQ

P/N: 89611-0450

480 SETS PER BAG
P/N: 89707-0001

P/N: 89610-0104

480 SETS PER BAG
P/N: 89707-0001

P/N: 89519-4701

480 SETS PER BAG
P/N:89707-0001

P/N: 89610-0104

480 SETS PER BAG
P/N:89707-0001

FOR 73171-6616

FOR 73171-6617

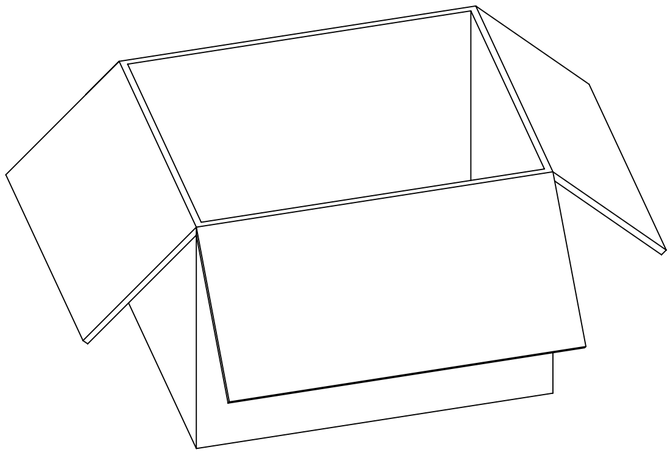

480 SETS PER OUTER
CARTON BOX
P/N: 89499-9027

FUNCTIONAL SYMBOLS	THIS DRAWING CONTAINS INFORMATION THAT IS PROPRIETARY TO MOLEX ELECTRONIC TECHNOLOGIES, LLC AND SHOULD NOT BE USED WITHOUT WRITTEN PERMISSION					
FA = 0	DIMENSION UNITS: HYBRID	SCALE: NTS	CURRENT REV DESC: ADD PN 73171-6619 PER EWR17244-A			molex
FC = 0	GENERAL TOLERANCES (UNLESS SPECIFIED)					BNC JACK R/A PCB TH 75 OHMS DC-12GHZ BNC-J/PCB
FP = 0	ANGULAR TOL ± 2°					
DIVISIONAL SYMBOLS	4 PLACES ±					PRODUCT CUSTOMER DRAWING
	3 PLACES ±		STATUS: Production			
	2 PLACES ±		DRWN: Cela Wei	2025-06-03	DOCUMENT NUMBER: SD-73171-661	DOC TYPE: PSD / DOC PART: 001 / REVISION: C4
	1 PLACE ±		CHK'D: Kerrie Chen	2025-06-17		
	0 PLACES ±		APPR: YCHENG	2025-06-17		
	DRAFT WHERE APPLICABLE MUST REMAIN WITHIN DIMENSIONS		THIRD ANGLE PROJECTION	DRAWING: C-SIZE	SERIES: 73171	MATERIAL NUMBER: SEE TABLE / CUSTOMER: GENERAL MARKET / SHEET NUMBER: 6 OF 6

FORMAT: TC-db-prod-C
REVISION: B
DATE: 2022/08/01